TELETYPE CORPORATION
Skokie, Illinois, U.S.A.

SUPPLEMENT I TO TEMPEST M40 MANUAL 561
Issue 1, June 1982
T.O. 31W4-4-300-162

TEMPEST MODEL 40

SERVICE MANUAL

The following information supplements the TEMPEST Manual 561, Issue 1, June 1982.

Printed in U.S.A.

This supplement provides information concerning an additional option which has been added to the 40C437/AEL/107 controller. The feature "ASCII RECOGNITION OF LF LF NNNN", was present in earlier controllers, and this change has made it optional.

The option is now lettered "BB.", and is present on the 410411 circuit card at switch position B8-8. The action of this option is as follows:

BB. ASCII RECOGNITION OF LF LF NNNN.

Switch on--"LF LF NNNN" is recognized as a message ending sequence in the 5-level mode, but not in the 8-level mode.

Switch off--"LF LF NNNN" is recognized as a message ending sequence in both the 5-level and the 8-level modes.

Upon receipt of this sequence, the terminal will append an ETX to the end of the sequence, display the ETX if so optioned, and the message will be terminated.

The controller circuit card affected is the 410578 card, and those with this change incorporated will be stamped with Issue 4A or higher.

Manual 561
Issue 1, June 1982
T.O.31W4-4-300-162

TEMPEST
model 40/8BII
KDP
with CASSETTE DRIVES

SERVICE MANUAL 561

TELETYPE
CORPORATION

©1978, 1980, 1981 and 1982 by Teletype Corporation
All rights reserved
Printed in U.S.A.

Teletype Corporation Product Service and Education Services

On the following page is a list of Teletype Corporation Product Service locations which provide maintenance service and repair on all Teletype Corporation products. For more information call toll free (US 800-323-4226) (IL 800-942-4192) 7:00 A.M. — 4:00 P.M. CST.

In addition, Teletype Corporation provides Customer Technical Training at its headquarters at 5555 W. Touhy Avenue, Skokie, IL in the northwest suburban area of Chicago. The training covers the installation, maintenance and repair of all Teletype Corporation products. Arrangements can also be made for training to be conducted at customer-selected field sites.

For information about class schedules, enrollment, tuition, on-site training or any special training needs, please contact:

Education Services
Teletype Corporation
5555 W. Touhy Avenue
Skokie, Illinois 60077
Telephone (312) 982-3940
TLX 25-4051
TWX 901-223-3611

SERVICE CENTERS

ALABAMA	BIRMINGHAM	230 OXMOOR CIRCLE SUITE 1113, HOMEWOOD. AL 35209	(205) 942-2574
	MOBILE	3207 INTERNATIONAL DR., SUITE B, MOBILE, AL 36606	(205) 473-8888
ARIZONA	PHOENIX	2113 S. 48TH ST., SUITE 104, TEMPE, AZ 85282	(602) 894-9891
	TUCSON	2015 N. FORBES BLVD., TUCSON, AZ 85705	(602) 623-6419
ARKANSAS	LITTLE ROCK	7501 INTERSTATE 30, SUITE 43, LITTLE ROCK, AR 72209	(501) 562-0266
CALIFORNIA	▲ LOS ANGELES	5445 SHEILA, CITY OF COMMERCE, CA 90040	(213) 728-2222
	OAKLAND	7305 EDGEWATER, SUITE C, OAKLAND, CA 94621	(415) 430-0202
	ORANGE COUNTY	11552 KNOTT, SUITE 9, GARDEN GROVE, CA 92641	(714) 891-2628
	SACRAMENTO	4221 NORTHGATE BLVD. NO. 4, SACRAMENTO, CA 95834	(916) 924-1933
	SAN DIEGO	7283 ENGINEER RD., SUITE B, SAN DIEGO, CA 92111	(714) 565-4375
	SANTA CLARA	3285 KIFER RD., SANTA CLARA, CA 95051	(408) 730-9083
	VENTURA COUNTY	2696 LAVERY COURT, SUITE 1, NEWBURY PARK, CA 91320	(805) 498-9655
COLORADO	COLORADO SPRINGS	905 GARDEN OF THE GODS RD., SUITE B, COLORADO SPRINGS, CO 80907	(303) 593-1222
	▲ DENVER	7100 BROADWAY, BUILDING 3-J, DENVER, CO 80221	(303) 429-9555
CONNECTICUT	HARTFORD	441 GOVERNORS HWY., SOUTH WINDSOR, CT 06074	(203) 568-9610
DIST. OF COLUMBIA	▲ LORTON, VA	9022 TELEGRAPH RD., LORTON, VA 22079	(703) 550-7507
FLORIDA	FT. LAUDERDALE	6858 N.W. 20TH AVE., FT. LAUDERDALE, FL 33309	(305) 974-4660
	JACKSONVILLE	6002 BOWDENDALE AVE., JACKSONVILLE, FL 32216	(904) 739-1170
	MIAMI	12802 S.W. 122ND AVE., MIAMI, FL 33186	(305) 252-1370
	ORLANDO	102 LIVE OAKS BLVD., CASSELBERRY, FL 32707	(305) 834-3818
	TAMPA	5474 JETPORT INDUSTRIAL BLVD., TAMPA, FL 33614	(813) 885-7413
GEORGIA	▲ ATLANTA	2520 PARK CENTRAL BLVD., DECATUR, GA 30035	(404) 981-7267
IDAHO	BOISE	172 S. COLE RD., BOISE, ID 83709	(208) 343-3629
ILLINOIS	▲ CHICAGO NORTH	2330 EASTERN AVE., ELK GROVE VILLAGE, IL 60007	(312) 860-5602
	▲ CHICAGO SOUTH	2900 21ST AVE., BROADVIEW. IL 60153	(312) 345-7920
	DECATUR	3501 RUPP PKWY., DECATUR. IL 62526	(217) 875-1092
INDIANA	INDIANAPOLIS	6240 LAS PAS TRAIL, INDIANAPOLIS, IN 46268	(317) 255-4566
IOWA	DES MOINES	8345 UNIVERSITY BLVD., DES MOINES, IA 50311	(515) 223-8444
KANSAS	KANSAS CITY	6339 W. 110TH ST., OVERLAND PARK, KS 66211	(913) 383-3370
KENTUCKY	LOUISVILLE	3600 CHAMBERLAIN, SUITE 348, LOUISVILLE, KY 40222	(502) 426-4312
LOUISIANA	NEW ORLEANS	5626 JEFFERSON HWY., HARAHAN, LA 70123	(504) 733-4823
	SHREVEPORT	5150 INTERSTATE P.O. 9128, SHREVEPORT, LA 71109	(318) 636-7104
MARYLAND	BALTIMORE	8980 ROUTE 108, COLUMBIA, MD 21045	(301) 796-1166
MASSACHUSETTS	BOSTON	131 FLANDERS RD., P.O. BOX 566, WESTBORO, MA 01581	(617) 366-8881
MICHIGAN	DETROIT	12916 FARMINGTON RD., LIVONIA, MI 48150	(313) 525-5356
	KALAMAZOO	126 E. KILGORE RD., KALAMAZOO, MI 49001	(616) 344-1944
	LANSING	3202 S. PENNSYLVANIA AVE., LANSING, MI 48910	(517) 394-6250
MINNESOTA	DULUTH	HWY 61 & CANOSIA RD., ESKO, MN 55733	(218) 879-1225
	MINNEAPOLIS	8824 SEVENTH AVE., NO., GOLDEN VALLEY, MN 55427	(612) 546-0808
MISSISSIPPI	JACKSON	137 TURN-POWE PLAZA, PEARL, MS 39208	(601) 932-1273
MISSOURI	ST. LOUIS	117766 WESTLINE INDUSTRIAL DR., ST. LOUIS, MO 63141	(314) 567-5910
NEBRASKA	OMAHA	13415 B STREET BAY 2, OMAHA, NE 68144	(402) 330-3606
NEVADA	RENO	23 GLEN-CARRAN CIRCLE, SPARKS, NV 89431	(702) 356-8022
NEW JERSEY	▲ FAIRFIELD	90 CLINTON ROAD, FAIRFIELD, NJ 07006	(201) 575-8240
	EDISON	1245 ROUTE 1, EDISON, NJ 08817	(201) 494-8288
NEW MEXICO	ALBUQUERQUE	2820 BROADBENT PKWY., N.E., ALBUQUERQUE, NM 87107	(505) 345-1854
NEW YORK	ALBANY	4 NORMANSKILL BLVD., ELSMERE, NY 12054	(518) 462-9937
	BUFFALO	1505 CLEVELAND DR., CHEEKTOWAGA, NY 14225	(716) 634-7233
	LONG ISLAND	195 PARK AVENUE, BETHPAGE, NY 11714	(516) 822-3533
	MANHATTAN	42 BROADWAY, SUITE 1633, NEW YORK, NY 10004	(212) 785-2530
	ROCHESTER	115 METRO PARK, ROCHESTER, NY 14623	(716) 475-1740
	SYRACUSE	5 ADLER DR., EAST SYRACUSE, NY 13057	(315) 463-4666
NORTH CAROLINA	CHARLOTTE	11190 DOWNS RD., PINEVILLE, NC 28134	(704) 588-3297
	DURHAM	500 E. WILLIAMS ST., APEX, NC 27502	(919) 362-4469
	GREENSBORO	727 E. MOUNTAIN ST., KERNERSVILLE, NC 27284	(919) 996-4934
OHIO	CINCINNATI	4890 DUFF DR., SUITE E, CINCINNATI, OH 45246	(513) 874-2586
	CLEVELAND	5325 NAIMAN PKWY, SUITE F, SOLON, OH 44139	(216) 248-0288
	COLUMBUS	6969 WORTHINGTON, GALENA RD., WORTHINGTON, OH 43085	(614) 436-2065
	TOLEDO	1000 S. REYNOLDS RD., TOLEDO, OH 43615	(419) 381-9900
OKLAHOMA	OKLAHOMA CITY	1000 CORNELL PKWY., SUITE 700, OKLAHOMA CITY, OK 73108	(405) 947-0969
	TULSA	2002 S. 114TH EAST AVE., TULSA, OK 74128	(918) 437-2010
OREGON	PORTLAND	7950 S. W. CIRRUS DR., BEAVERTON, OR 97005	(503) 641-9575
PENNSYLVANIA	HARRISBURG	4407-D CARLISLE PIKE, CAMPHILL, PA 17011	(717) 737-0405
	PHILADELPHIA	103 ROCK ROAD, HORSHAM, PA 19044	(215) 674-2181
	PITTSBURGH	780 PINE VALLEY DR., PITTSBURGH, PA 15239	(412) 325-4403
SOUTH CAROLINA	COLUMBIA	6007 TWO NOTCH RD., COLUMBIA, SC 29204	(803) 786-2927
TENNESSEE	MEMPHIS	1835 NONCONNAH BLVD., SUITE 121, MEMPHIS, TN 38132	(901) 346-8840
	NASHVILLE	220 GREAT CIRCLE RD., SUITE 134, NASHVILLE, TN 37228	(615) 254-0546
TEXAS	▲ DALLAS	222 N. STORY RD., SUITE 124, IRVING, TX 75061	(214) 254-4189
	HOUSTON	8981 INTERCHANGE DRIVE, HOUSTON, TX 77054	(713) 666-1671
	LUBBOC	5605-A VILLA DRIVE, LUBBOC, TEXAS 79412	(806) 747-2225
	SAN ANTONIO	4243 CENTER GATE, SAN ANTONIO, TX 78217	(512) 656-9370
UTAH	SALT LAKE CITY	3650 W. 2100 SOUTH, SALT LAKE CITY, UT 84120	(801) 972-6332
VIRGINIA	LORTON (DC AREA)	5701-G GENERAL WASHINGTON DR., ALEXANDRIA, VA 22312	(703) 941-6202
	NORFOLK	5308-D VIRGINIA BEACH BLVD., NORFOLK, VA 23502	(804) 461-1778
	RICHMOND	8427 GLAZEBROOK AVE., RICHMOND, VA 23228	(804) 262-4062
WASHINGTON	SEATTLE	635 STRANDER BLVD., SEATTLE, WA 98188	(206) 575-4515
WEST VIRGINIA	CHARLESTON	808 MAIN STREET, NITRO, WV 25143	(304) 755-3300
WISCONSIN	APPLETON	324 W. WISCONSIN AVE., SUITE 3, APPLETON, WI 54911	(414) 731-1494
	EAU CLAIRE	1806 WARDEN ST., EAU CLAIRE, WI 54701	(715) 832-4431
	MADISON	3680 KINSMAN BLVD., MADISON, WI 53704	(608) 249-5999
	MILWAUKEE	448 W. RAWSON AVE., OAK CREEK, WI 53154	(414) 764-6500
	WAUSAU	120 E. STEWART AVE., WAUSAU, WI 54401	(715) 845-8688
CANADA	▲ TORONTO	31 KLONDIKE DR., WESTON, ONTARIO, CANADA M9L 1S1	(416) 745-9474

▲ REGIONAL OFFICES

PART	DESCRIPTION
1	GENERAL
2	DESCRIPTION OF TERMINAL OPERATION
3	OPERATIONAL CHECKOUT
4	TROUBLESHOOTING
5	ADJUSTMENTS
6	COMPONENT ACCESS
7	ROUTINE MAINTENANCE

PART 1 -- GENERAL

INDEX

PAGE

A. INTRODUCTION 1-1

B. FEATURE AND OPTION RECORD. 1-2

C. TECHNICAL DATA 1-3
1. POWER SOURCE REQUIREMENTS. 1-3
2. POWER CONSUMPTION AND HEAT DISSIPATION 1-3
3. ENVIRONMENTAL RESTRICTIONS 1-3
4. WEIGHT 1-3

D. SUPPLEMENTARY INFORMATION. 1-3

E. TOOLS AND SUPPLIES 1-4
1. TOOLS. 1-4
2. SUPPLIES 1-4

A. INTRODUCTION

This manual covers the servicing of the Tempest Model 40 Sets shown in Pages 6 through 17 of Manual 560.

A thorough review of this manual should be completed before servicing of the Tempest Model 40 equipment is undertaken.

This manual consists of six parts. Parts 3 through 7 provide information necessary to checkout (Part 3), troubleshoot (Part 4), adjust (Part 5), disassemble/reassemble (Part 6) and maintain (Part 7) the Tempest Model 40 Sets. Each part begins with an index, which lists the information contained in that part.

Installation information is provided in Tempest Manual 560.

Trouble isolated to outside the output terminal blocks are not analyzed in this manual.

The routine servicing specified for sets with printers and cassette drives should be performed at recommended intervals. See PART 7.

WARNING: CARE SHOULD BE EXERCISED IN THE AREA OF THE CRT PICTURE TUBE TO AVOID BREAKAGE WHEN SERVICING THE MONITOR WITH ITS COVER REMOVED.

DANGER: ALL POWER TO THE SET SHOULD BE TURNED OFF WHEN ANY COMPONENTS ARE REPLACED, HOWEVER, WHEN ALIGNMENT ADJUSTMENTS ARE PERFORMED, POWER MUST BE ON. IT IS RECOMMENDED THAT SAFETY GLASSES BE WORN WHENEVER THE MONITOR COVERS ARE REMOVED.

The correction of troubles (PART 4 -- TROUBLESHOOTING) is based on replacement of defective components, therefore, the components shown in this manual, which are applicable to the set, should be readily available. A 405900 carrying case to facilitate storage and transportation of smaller components, is available.

A. INTRODUCTION (Cont)

Card Positions

- 1-14 -- Circuit Cards (Similar to 410400)
- 15 -- 410852 Rectifier Card
- 16 -- 410853 Regulator Card
- 17 -- 410545 Video Card
- 18 -- 410546 High Voltage Card

NOTE: All component side of circuit cards to face front except that in position 18 .

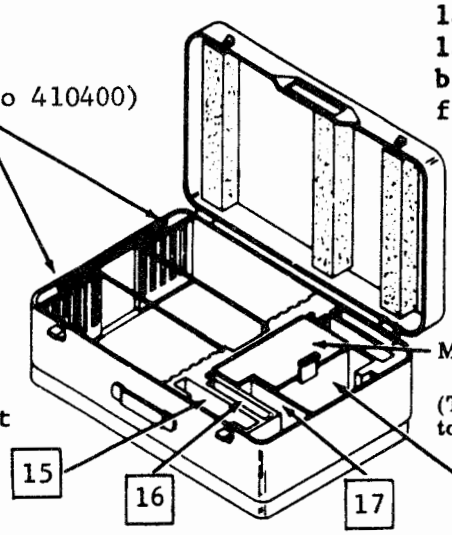

Space available for identification label. To apply label, remove paper backing and press firmly in place.

MISCELLANEOUS PARTS COMPARTMENT
(To open cover, pull handle toward left.)

PART 4 -- TROUBLESHOOTING provides information on when and how to utilize the test switches and indicators provided in the design of the Tempest Model 40.

NOTE: When ordering replaceable parts or components, unless otherwise specified, prefix each part number with the letters "TP" (ie, TP410055).

B. FEATURE AND OPTION RECORD

Before proceeding with checkout or servicing, a review of the features and field options or other descriptions and records should be made to determine which options, if any, should be changed from the way they were furnished by the factory, applied at a service location, or altered during earlier service applications.

A Feature and Option Record for the set should be maintained and attached to the equipment to facilitate checkout or operation.

Conversion information, to change features in the field, is not provided in this manual except to convert replacement components when correcting a trouble by substitution, thereby retaining the original features in the repaired set. For information to add or change the features originally ordered, refer to the Teletype Corporation catalog, modification kit specifications, or other instructions and make proper entries on the Feature and Option Record.

Folded and located in pedestal document holder.

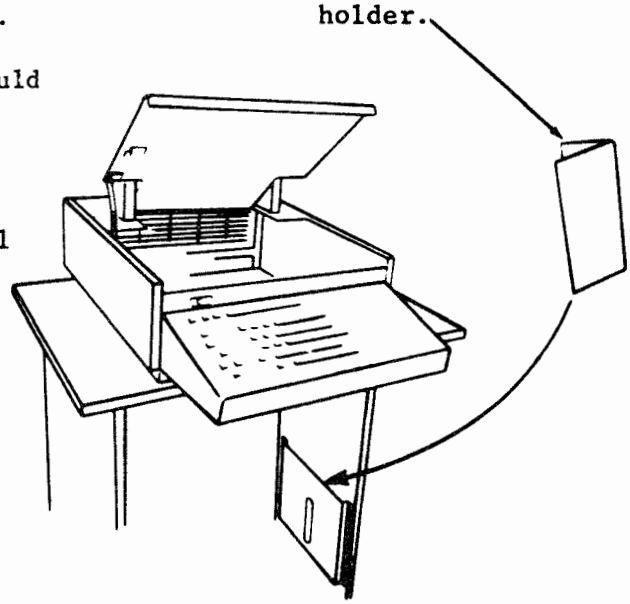

C. TECHNICAL DATA

1. POWER SOURCE REQUIREMENTS

115 V ac ±10% 50/60 Hz ±0.5 Hz from an unswitched, standard 3-wire system.

NOTE: When operating from a 50 hertz power source, a pulley change is required on the printer and the tape cassette drives.

Depending on set configuration, up to four ac outlets, with ground connector (3-prong), are required. One outlet for each of the cassette drives (up to 3) and one for the paper winder, if supplied.

DANGER: SETS MUST BE PROPERLY GROUNDED TO PREVENT SHOCK HAZARD.

2. POWER CONSUMPTION AND HEAT DISSIPATION

			Approx Current Draw
KDP	500 Watts	1720 BTU/Hr	4.5 Amps
KD	365 Watts	1250 BTU/Hr	3.35 Amps
CD (each)	105 Watts	367 BTU/Hr	1.0 Amps

3. ENVIRONMENTAL RESTRICTIONS (Operating)

Ambient Temperature	+40°F to +110°F
Relative Humidity	2% to 95% (noncondensing)

4. WEIGHT (Approximate)

	Unpacked
Display Monitor W/Housing	42 lbs
Terminal Logic	50 lbs
Printer and Printer Logic	40 lbs
Housing for Terminal Logic or Printer	15 lbs
Operator Console W/Cover	5 lbs
Pedestal	56 lbs
Cassette Drive	19 lbs

D. SUPPLEMENTARY INFORMATION

Supplementary information can be found in the How to Operate Manual 559, Installation Manual 560 and Section 570-005-800TC, Maintenance Tools.

The following wiring diagram packages (WDP), covering the component are supplied with the set.

WDP0435 40P Printer
WDP0453 40CAB202/RA, RC Friction Feed Printer Cabinet
WDP0454 40CAB352/RA, RC Tractor Feed Printer Cabinet
WDP0457 40CAB903/RH, RK, RM Pedestal
WDP0460 40MN202/RA Monitor
WDP0501 4016RA/001/RA Tempest Cassette Drive
WDP0525 40K108/RDK Opcon
WDP0592 40C437/AEL/107 Controller

E. TOOLS AND SUPPLIES

The following tools and supplies may be required for installation or servicing of Tempest Model 40 apparatus. Most of these items should, normally, be present in standard maintenance tool kits.

1. TOOLS

Wrench	3/16" socket	125752
Open-end wrench	3/8"	125765
Open-end wrench	3/16" and 1/4"	129534
Open-end wrench	5/16" and 3/8"	152835
Open-end wrench	3/4"	129537
Nut driver handle		135676
Nut driver	1/4"	89954
Nut driver	5/16"	89955
Nut driver	1/4"	135677
Nut driver	5/16"	135678
Screwdriver	1/8", 2" blade	95368
Screwdriver	1/4", 6" blade	100982
Screwdriver	(blade less than 5/32")	94647
Allen wrench	0.050	104457
Allen wrench	0.078	110271
Tweezers		151392
Spring hook (pull)		142554
Spring hook (pull)		75765
Spring hook (push)		75503
Spring scales (8 oz)		110443
Ruler	6"	95960
Cleaning brush (type face)		151394
Long-nose pliers		108285
Cutting pliers		108286
Terminal extractor		182697
Retaining ring pliers		160396
Terminal extractor		341983
Keyswitch extractor		346257
Keytop extractor		346260
Gauge		402617
Gauge		402868
Terminal extractor		(MOLEX HT2285)
Monitor adjusting tool		405992
Card extender		410499
Static discharge strap		346392
Gauge (brake and clutch gap)		406131
Wrench, driver (402274/402275 drive hubs)		406130

2. SUPPLIES

Grease -- 145867 (4 oz can) or 143484 (one lb can)
Oil -- 88970 (1 qt can)
Ribbon -- 402444 for Model 40 Printer - 7835 for Model 28 Reperforator
Paper (tractor feed)
Degreaser (Freon TF) -- 337449 (6 oz aerosol can)
Tape head cleaner -- 337401 (6 oz aerosol can)

PART 2 -- DESCRIPTION OF TERMINAL OPERATION

INDEX PAGE

A. GENERAL
1. INTERFACE REQUIREMENTS 2-1
2. OPTIONS 2-3
3. IMPORTANT NOTES CONCERNING TERMINAL OPERATION 2-8
4. GENERAL DESCRIPTION OF DATA TRANSFER 2-8
5. DEFINITION OF CONTROL KEY OPERATION 2-9

B. LOCAL OPERATION
1. CONTROL MODE OPERATION 2-15
2. OPCON TO DISPLAY OPERATION 2-18

C. ON-LINE OPERATIONS
1. DISPLAY SEND/RECEIVE OPERATIONS 2-23
2. OPERATION IN 5-LEVEL COMMUNICATION MODE 2-32
3. POLL/SELECT TERMINAL OPERATION 2-33
4. SEND/RECEIVE TERMINAL OPERATIONS 2-35

D. DESCRIPTION OF CASSETTE OPERATION 2-36

A. GENERAL

The Tempest Model 40/8B Terminal with Cassette Drives provides a terminal capable of three on-line modes of operation. The first mode is point-to-point or multipoint asynchronous or isochronous private line data communication systems using 8-level ASCII code and employing ANSI Standard Link Control Procedures (similar to 8A selective calling) at speeds up to 3600 baud. The second mode is 8-level ASCII code asynchronous or isochronous manual transmission at speeds up to 3600 baud. The third mode is 5-level Baudot code, asynchronous or isochronous manual transmission at speeds of 50 to 600 baud.

1. INTERFACE REQUIREMENTS

The station provides an isolated interface in the pedestal of each set. This interface provides a means for customer termination of signal leads and power for the set. Signal leads conform to the voltage, impedance and waveshape requirements of MIL STD 188C and are described briefly:

SIGNAL - Receive and Transmit Data
+6 V dc mark, -6 V dc space

CLOCK - Receive and Transmit Clock
+6 V dc to -6 V dc excursion
- to + transition is start of bit
+ to - transition is mid bit point

CONTROLS - Terminal Ready Output
+6 V dc Ready, -6 V dc Stop
- Clear to Send Input
+6 V dc Clear to Send, -6 V dc Stop

A. GENERAL (Contd)

1. INTERFACE REQUIREMENTS (Contd)

The set is basically full duplex; that is, the Transmit and Receive lines are isolated and independent of each other. The set is shipped with a half-duplex strap installed and must be removed at installation.

Options to the above:

a. Receive Data can be inverted -6 V dc mark, +6 V dc space (EIA Compatible) by replacing the circuit card in slot Z6 of the interface with a 303184 circuit card.

b. Transmit Data can be inverted -6 V dc mark, +6 V dc space (EIA Compatible) by replacing the circuit card in slot Z7 of the interface with a 303185 circuit card.

The Interface Assembly provides a compartment for the distribution of ac power.

Live Side
Ground Side
Protective Ground (NOTE: The set must have a properly connected ground to prevent shock hazard.)

Two 15 amp circuit breakers serve to protect the line and ground sides and also serve as a main power switch for the set. The input power requirements are:

	KDP	KD
115 V ac ±10% 50/60 Hz ±0.5 Hz	Current - 4.5 amp Watts - 500 BTU/hr - 1720	Current - 3.35 amp Watts - 365 BTU/hr - 1250

Worst case surge current.

88 amps peak, first half of first cycle, decaying to
22 amps peak, second half of third cycle.

The interface and terminal have been designed with the ability to receive error free messages even if the received signals are distorted. The maximum allowable distortion before an error will occur may vary slightly from terminal to terminal; however, the receive data distortion values below are those beyond which terminal failures can be expected.

	ASYNCHRONOUS	ISOCHRONOUS
MIL (188C)	35% Spacing 40% Marking	25% Spacing 40% Marking
EIA (RS-232)	35% Spacing 40% Marking	40% Spacing 40% Marking

During the transmission of information, one can expect small amounts of distortion to appear at the output interface. Although transmission distortion may vary from terminal to terminal, one can expect typical values will not exceed the following values:

	ASYNCHRONOUS	ISOCHRONOUS
MIL (188C)	3% Spacing 1% Marking	6% Spacing 1% Marking
EIA (RS-232)	5% Spacing 1% Marking	10% Spacing 1% Marking

The foregoing distortion values are based on the worst case data rates throughout the range of speeds for the terminal.

2. OPTIONS

The Model 40/8BII terminal provides a number of options available at the time of installation. These options are implemented by positioning option switches on the 410411 circuit card in the controller of the terminal.

The following is a list of the options available:

A. Printer to Copy Send or Receive Line -- When this option is enabled, the printer copies data that is sent from the terminal and data received by the terminal. When disabled, the printer copies only receive data.

B. Send ETX on Premature End of Message -- Enable this option and an ETX will be transmitted to the line if a message currently being transmitted is aborted. This option must be enabled for proper POLL/SELECT operation. (Refer to sections on display and send tape operations for abort procedures.)

C. Colon is Lower Case on Keyboard and Semicolon is Upper Case -- Disable this option and the position of the colon and the semicolon are reversed.

D. Keyboard On-Line Transmits Blind -- This option is used to select whether or not the keyboard characters being sent to the line are also sent to the display. When the S/R mode is selected this option provides a means to monitor the keyboard output on the display (half-duplex operation). If the SEND data is echoed back to the terminal, this option should be enabled so that the received data will not be garbled.

E. Display Received Escape Sequences -- Enable this option and the received escape sequences are displayed and not performed. Disable this option and the received escape sequences are performed.

A. GENERAL (Contd)

2. OPTIONS (Contd)

F. Printer Required to Transmit — The printer must be on-line before a message can be transmitted on-line in the POLL/SELECT mode if this option is enabled. If in the SEND/RECEIVE mode, the printer is placed on-line when the terminal powers up.

G. Send On-Line the Extended Keyboard Characters — Applies only to the keyboard on-line and the S/R mode and allows the codes for all keyboard keys to be transmitted on-line except for those keys in the control strip to the left of and including FORM SEND.

H. Monitor Tape Required to Send — If enabled, requires that the monitor tape must be ready before the display, send tape or the keyboard (S/R mode) will be allowed to send.

I. Automatic Paging on Printer — Enable this option to have a FF sent to the printer after every 54 lines of data, when the printer motor is started or upon the end of message.

J. Printer Optioned for Double Line Feed — This option should reflect how the printer itself is optioned and is used in conjunction with the automatic paging option.

K. Keep Received Letters and Figures Shift Characters (5-Level Only) — When disabled, the controller will discard shift-in (SI) and shift-out (SO) characters received from the line.

L. Printer Select Also Selects Receive Tape — Enable this option to automatically select the receive tape and the printer when the printer select (=) is received from the line (POLL/SELECT mode only).

M. Terminal Parity — For all 8-level operations these option switches set the selection of line parity as being odd, even, no parity-8th bit mark or no parity-8th bit space.

N. Display Stays in Receive at End of Message — Enable this option to keep the display ready to receive additional messages from the line. Disable this option and the display will go off-line at the end of a received message.

P. Send Tape Location — Allows the selection of the tape drive to be used as send tape on power up.

Q. Receive Tape Location — Allows the selection of the tape drive to be used as the receive tape on power up.

R. Monitor Tape Location — Allows the selection of the tape drive to be used as the monitor tape on power up.

S,T. Station ID — Allows the programing of 2 station identification characters.

U. Display to go to Receive Mode After Sending — Enable this option to allow the display to go to the receive mode after sending. Disable this option and the display will go off-line after sending a message.

V. Isochronous Operation — Enable this option and the terminal will operate in the isochronous mode (bit timing externally supplied) at speeds up to 3600 baud. Disable this option and the terminal will operate in the asynchronous mode (bit timing internally supplied as selected in Option ZZ) at speeds up to 3600 baud.

X. Line Wrap — Provides a means of causing the cursor to wrap when it reaches the end of the line.

Y. Reject Received Nulls — Provides a means of rejecting null character received from the line.

Z. Home on Send — Enable this option to home the cursor whenever the display is placed in on-line send or local send.

AA. Stop bits in 5-Level — Allows the stop bits used in 5-level operation to be either 1 or 1.5 stop bits.

AB. Send/Receive or POLL/SELECT Mode — Enable this option and the S/R mode is active. Disable this option and the POLL/SELECT mode is active.

AC. Received ETX Retained — Enable this option and received ETX characters from the line are retained by the terminal and sent to the on-line receivers. Disable this option and received ETX characters are discarded by the terminal.

AD. Line Terminator Functions — Refer to the Line Terminator Function Chart on **Page 2-42 for** line terminator functions.

AE. One Second Line Break on NAK (or INT) From Keyboard — Enable this option and the terminal will send a one second line break when the NAK (or INT) key is activated on the keyboard. Disable this option and no line break will be sent from the terminal.

AF. Stop Bits in 8-Level Operation — Enable this option and the terminal will send and receive data with 2 stop bits (11 Unit Code). Disable this option and the terminal will send and receive data with 1 stop bit (10 Unit Code).

AG. Destructive Scrolling — Enable this option and the display will retain the last 144 or 72 lines of received data. Disable this option and the terminal will retain the first 143 or 71 lines of received data with the last display line overwritten by the last line of receive data.

Note: Lines containing protected data may be scrolled off the display and lost.

AH. Number of Display Segments — Enable this option and the display will operate with 6 segments (144 lines). Disable this option and the display will operate with 3 segments (72 lines).

AI. Data Terminal Ready Control — Refer to the Data Terminal Ready Chart on **Page 2-43 for data** terminal ready output functions.

AJ. ETX Required to Send — Enable this option and the display will not send unless there is an ETX on the display at the end of the data to be sent. Disable this option and the display will send if there is no ETX at the end of the data to be sent.

A. GENERAL (Contd)

2. OPTIONS (Contd)

AL. Preempt Display on Receipt of Data — Enable this option and receive data will preempt the display so that it can receive data from the line. The audible alarm will sound and the DTR lead will be turned on. If other receiving devices become inactive, DTR may be disabled depending on Option AI, but the display will continue to receive data. Disable this option and receive data will not preempt the display.

AM. 40/8A Emulator-Display Option — Enable this option and the terminal will emulate the 40/8A terminal operation. Disable this option and the terminal will operate with the standard 40/8B operation.

AQ. Power Up Mode — Enable this option and the terminal will power up in the 5-level mode. Disable this option and the terminal will power up in the 8-level mode.

Note: This option should not be enabled if the POLL/SELECT mode is optioned.

AS. Local Send Tape to Display Option — Enable this option and a full display (144 or 72 lines) is loaded from the send tape in a local send tape to display operation. Disable this option and a partial display (129 or 61 lines) is loaded from the send tape in local send tape to display operation (to allow for editing).

AT. Reject Received Deletes — Enable this option and the terminal will discard received delete characters. Disable this option and the terminal will not discard received delete characters.

AU. Location of "Carriage Return" and "Line Feed" Functions on Keyboard — Enable this option and the carriage return function is the wide key at the lower right of the keyboard and the line feed function is on the tilde (~) and accent grave (` ) key at the upper right of the keyboard. Disable this option and the line feed function is the wide key at the lower right of the keyboard and the carriage return function is on the tilde (~) and accent grave ( `) key at the upper right of the keyboard.

AV. Clear Display When Preempted — Enable this option and the display will be cleared and the cursor will be positioned to the Home position when the display is preempted to the receive mode (Option AL enabled). Disable this option and received data will be displayed starting at cursor location when the display is preempted to the receive mode.

AW. ZNY Transmission Control — when enabled, the terminal will prevent an operator from transferring locally within the terminal or transmitting from the terminal messages containing "ZNY" classifications.

AX. RTS/DTR Control Signal — defines the logical output of the TEMPEST treated terminal's DTR output lead. When enabled, the terminal's Customer Interface's DTR output lead will be used to output the "Request to Send" (RTS) control signal. When the option is disabled, the same lead will output the "Data Terminal Ready" (DTR) control signal.

AY. Urgent Traffic and Priority Message monitor — when enabled, the terminal will sound bell and flash opcon lamps upon receipt of any defined Urgent Traffic sequence or properly sequenced Priority Message.

AZ. ZNY EEE Transmission Control — characterizes the ZNY Transmission Control option (See option AW). When enabled, this option defines the character sequence "ZNY EEE" as a ZNY classification.

BA. Low Tape Indication Value. When enabled, the Receive or Monitor tape will signal a low tape condition when 100 blocks from end of tape. When disabled, the Receive or Monitor tape will signal low tape when 25 blocks from end of tape.

ZZ. Asynchronous Baud Rates — This option allows the selection of the 8- and 5-level asynchronous baud rates. The following baud rates are available:

8-Level Baud Rates	5-Level Baud Rates
50	50
75	75
100	100
110	110
150	150
300	300
450	450
600	600
900	
1200	
1800	
2400	
3600	

A. GENERAL (Contd)

3. IMPORTANT NOTES CONCERNING TERMINAL OPERATION

Cassettes should never be removed from the drive mechanism unless the tape is rewound to the beginning, ie, on clear leader. When the tape is positioned on the leader, the lamp on top of the cassette drive will be off. This lamp turns on whenever the tape moves off the clear leader. Therefore, never remove cassettes when the lamp is ON. See Pages 2 — 15 on CONTROL MODE operation for instructions on how to rewind cassettes.

Cassette power should not be turned off until all cassettes are rewound and unlatched. Failure to do so may result in data errors on the tape at the location under the heads at the time of power off.

Controller power should not be turned on or off until all cassettes are unlatched. Failure to do so may result in erroneous operation of the cassettes requiring them to be unlatched and latched (possibly several times) before they will operate properly.

After controller power is turned off, wait several seconds before turning it back on.

4. GENERAL DESCRIPTION OF DATA TRANSFER

Data transfer between devices is controlled by the C400 Controller through the keyboard control switches and/or information entered on the Display.

The display is the only device that can act as both a sender or as a receiver. All other devices are dedicated to either the sending or receiving of messages.

Internally the terminal may be considered to consist of two I/O buses: a line bus and a local bus. I/O devices are assigned to one of these buses by control key depressions or by default or pre-empt.

Only one device can be assigned as a sender on any bus at any one time, but multiple receivers can be assigned.

Locally the send rate is controlled by the speed of the slowest receiver. No data will be sent if no receiver is assigned.

Multiple I/O operations can run at the same time as long as there are no conflicts in either initiating the operations or in the transfer of data.

Cassettes may be assigned as Send Tape, Receive Tape or Monitor Tape either initially by means of installer option switches or subsequently in CONTROL MODE. Only one of each type is allowed in a system.

The terminal can be optioned to operate in either even, odd, or no parity.

5. DEFINITION OF CONTROL KEY OPERATION

Send Tape Line; Send Tape LCL

Operation of this pair of switches results in the Send Tape being assigned to either the local bus or the line bus. Only one switch may be ON at one time. Both switches OFF turns the Send Tape OFF. When in OFF state, the Send Tape is disabled as a sender, but is available for access by some of the CONTROL MODE functions. (See CONTROL MODE). Turning either the SEND TAPE LINE or SEND TAPE LCL switch ON will start the transfer of data from the tape to the assigned bus. A tape is prepared for a local send operation (to a local device) by loading the tape, positioning it via the CONTROL MODE, and placing the SEND TAPE LCL switch in the ON (lighted) position. If another local device is ready to receive, the tape will begin sending. Otherwise, if no local receiver is selected, the lamp on the SEND TAPE LCL key will not light and no transmission will occur. The tape will stop sending either at the end of the message, or at the end of the last message in the cassette. At this time, the SEND TAPE LCL lamp goes OFF. If the switch is turned off while the tape is sending, the lamp will flash but the tape will continue sending until the end of the message. Then the lamp will go OFF. If all receivers are off and the SEND TAPE LCL lamp is still ON, depressing the lighted key will turn the tape off. If the SEND TAPE LCL key is depressed when the associated lamp is flashing, the local transfer of data will be terminated.

Note: A flashing PTR LCL lamp must be reset before attempting to deselect the SEND TAPE LCL switch after any tape-to-printer data transfer.

On-Line Manual Operation

The Send Tape must be previously prepared locally with the message(s) to be sent and inserted in the Send Cassette Drive. Then the CONTROL MODE must be entered, the tape must be positioned to the start of the message to be transmitted and the SEND TAPE LINE switch must be selected. Accordingly, if another device has been previously prepared to send on-line, the SEND TAPE LINE lamp will stay OFF. If the Send Tape is assigned to the line bus and no receivers are available at the distant end, the SEND TAPE LINE lamp will turn ON and the Send Tape will wait for a receiver. Depressing the SEND TAPE LINE key under this condition will cause the lamp to flash but the Send Tape will continue to wait for a distant receiver. If the SEND TAPE LINE key is depressed when its associated lamp is flashing, the lamp is turned OFF, transmission terminated and an ETX optionally transmitted on-line. The Send Tape ports can be pre-assigned through the option switches and/or assigned through the CONTROL MODE.

One message or multiple messages may be transmitted depending on the method selected in CONTROL MODE. If the multiple message method is used, the terminal will send until the end of the data on the tape. The operation may be stopped by deselecting the SEND TAPE LINE key, at which time the lamp on the key will flash and the terminal will continue to transmit the data on the tape until the message being transmitted terminates. When transmission is completed, the lamp on the SEND TAPE LINE key will turn OFF. While the lamp is flashing, however, transmission may be completely terminated, before the end of the current message, by again pressing the SEND TAPE LINE key. An ETX will optionally be placed on the line at this time and the lamp on the key will be turned OFF.

Error Detection in SEND TAPE

The detection of a BLOCK CHECK ERROR on the tape during on-line transmission will cause both the SEND TAPE LINE and the SEND TAPE LCL lamps to flash and transmission to stop. Recovery requires the operator to select DISP LCL, deselect all other local receivers and depress the SEND TAPE LCL key. Depression of the SEND TAPE LCL key clears the alarm and the balance of the message containing the BLOCK CHECK ERROR is displayed on the screen until the end-of-message character is received or until the display is filled (whichever comes first). The first block of data from the cassette drive to the display is the one that caused the error. The message on the display can be scanned to determine where the BLOCK CHECK ERROR is located. The error can be corrected on the display and the balance of the now-corrected message can be sent from the display to the line, or the transmission can be aborted and the message corrected later.

A. GENERAL (Contd)

5. DEFINITION OF CONTROL KEY OPERATION (Contd)

If the BLOCK CHECK ERROR is detected while sending locally from the tape to the display, the SEND TAPE will flash and the bell will ring but the transfer of data will continue as described above. Depressing the SEND TAPE LCL key clears the alarm. This alarm should be reset only after the complete message is transferred to the display.

If the error is detected while sending locally to the printer or to the receive tape, but not to the display, the SEND TAPE LINE and SEND TAPE LCL lamps flash. To recover, the DISP LCL key must be selected and all other local receivers deselected before the SEND TAPE LCL key is pressed. This will clear the alarm and transfer the balance of the message containing the error to the display.

When a BELL character is received on the display from the SEND TAPE, a bell tone is not sounded on the opcon.

Rec Tape Line; Rec Tape LCL

Operation of this pair of switches results in the Receive Tape being assigned to either the local bus or the line bus. Only one switch may be ON at a time. Both switches OFF turns the Receive Tape OFF. In the off state the Receive Tape is disabled as a receiver, but is available for access by some of the CONTROL MODE functions. For local operation, the Receive Tape is prepared by loading a tape and selecting the REC TAPE LCL key. From this point, the Receive Tape will copy all messages from any local sender (ie, Display or Send Tape). For On-Line operations, the Receive Tape is prepared by loading a tape and selecting the REC TAPE LINE key. When the REC TAPE LINE switch is selected, the tape will record all messages received from the line until the switch is turned off, even if local work is being done.

Turning on either the REC TAPE LINE or REC TAPE LCL switch will first result in an attempt to position the tape to the next available recording area. During this time, the Rec Tape key will flash. If the tape is write-protected or unformatted (see ERASE function in CONTROL MODE), the lamp of the selected key will remain OFF. Otherwise, the lamp will flash until the next available recording area is found, or until a low tape condition is detected. If low tape is detected the lamp will turn OFF. Not until a recordable area is found will the lamp turn ON and the tape be enabled as a receiver. The positioning procedure can be aborted ONLY by unlatching the cassette; pressing the Receive Tape key will turn the lamp OFF, but the positioning procedure will continue.

If either of the REC TAPE keys is pressed while the tape is waiting for a message, the lamp will go OFF immediately. If the key is pressed after the message has begun, the lamp will flash but the tape will remain selected until an end-of-message character is received. The lamp will then go out. If either REC TAPE key is pressed after a message has begun and while the lamp is flashing due to an abort attempt on the part of the operator; the tape will be deselected, the current message will be terminated with an ETX, and the lamp will be turned OFF.

The Receive Tape key lamps will not turn ON if insufficient space is left on the tape (less than 25 blocks or optionally 100 blocks). When the Receive Tape is in the process of receiving, the Receive Tape lamp starts to flash when only 25 blocks (or optionally 100 blocks) are left on the tape, but the Receive Tape will continue to record the incoming message.

Should the Receive Tape become disabled while ON-LINE, (due to a loss of AC power or SSI control, or removal of the cassette from the drive) the REC TAPE LINE will flash and the audible alarm will sound. The alarm may be reset by pressing the CLEAR key on the opcon or the flashing REC TAPE LINE key. The latter will also cause the Receive Tape to be deselected and the REC TAPE LINE lamp to be turned OFF.

If the terminal is optioned to reject incoming NULLS, no NULLS received ON-LINE will be entered on an activated Receive Tape.

PTR Line; PTR LCL

The printer is assigned to either the line or local bus by this pair of switches. The printer is prepared for local operation by placing the PTR LCL keyswitch in the lighted condition. It will then copy any data sent locally until the key is deselected. Operation of PTR LCL during a LIST HEADINGS (see CONTROL MODE), operation can be used to obtain a printed copy of the headings as they are displayed. When the PTR LINE switch is on, it will copy either the receive side of the line or the send and receive sides of the line depending upon option selected. With the "echo copy" feature enabled, the printer will copy all data on the receive data line, ie, received data and echoed send data. With the "echo copy" feature disabled, the printer will only copy received data. The printer is disabled as a receiver when both switches are OFF. Turning either switch ON will enable the printer to copy data from it's assigned bus. The lamp turns ON when the switch is operated to indicate an enabled condition even though no data is being transferred. The rate of transfer is determined by the slowest active device on the assigned bus. If no sender is enabled, the printer will wait until one is enabled.

When the terminal is optioned to power-up in the POLL/SEL mode, the printer will automatically be placed ON-LINE. When it is manually switched to Local, data transfer must start within a time-out period of approximately 15 seconds or the printer will revert to the Line mode.

The appropriate printer lamp will flash if either the printer fails to turn ON after 2 tries or the printer is disabled after it is selected (eg, because it's cover is raised or it runs out of paper). To alert the operator, failure of the printer when ON-LINE will also cause an audible alarm to sound. This alarm may be silenced by pressing the CLEAR key in the opcon or the flashing PTR LINE keytop. If the problem which created the shut-down of the printer is resolved, pressing the appropriate PTR switch will cause the lamp to stop flashing and the printer to restart printing. Pressing the PTR switch without resolving the problem which forced the printer shutdown will cause the printer to be deselected as a receiver. If other receivers are enabled, transmission will resume to the remaining receivers.

Note: Since the printer may perform an automatic CR as a result of the out-of-service condition, the operator is advised to manually LINE FEED the printer after correcting a problem.

The controller may be optioned for the printer to ignore a CR or LF in both the ON-LINE and LOCAL operations if this character is preceded by a CR. The receipt of any character other than a CR resets the printer logic such that the process is restarted. The following are examples of printer response on receipt of typical line ending sequences:

CR LF	— Causes one NEW LINE function;
CR CR LF	— Causes one NEW LINE function;
CR CR CR LF	— Causes one NEW LINE function;
CR CR LF LF LF	— Causes three NEW LINE functions.

Whenever the printer receives a NEW LINE as the 81st character, it will be disregarded. This permits consecutive lines to be printed in case the line wrap option has been selected and the operator enters a NEW LINE immediately after the wraparound has occurred. For example, an 80 character line might be sent from the display, with the line wrap option, to the printer followed by a line containing only a NEW LINE character. In this case, the NEW LINE would be thrown away.

Additional options associated with the printer's operation:

A printer motor time-out will be recognized by the terminal if it is optioned at the printer. This printer option permits the printer motor to restart upon receipt of new characters. If the controller is optioned for 54 line paging on the printer, a FORM FEED will be sent to the printer on motor time-outs.

A single or double LINE FEED may be used on the printer. If the double LINE FEED is used on the printer and the paging option is selected, the double LINE FEED option in the controller must be selected as well.

When the printer is selected, the receive tape may be optioned to receive as well.

A. GENERAL (Contd)

5. DEFINITION OF CONTROL KEY OPERATION (Contd)

Disp Line; Disp LCL

Operation of this pair of switches assigns the Display to either the line or local bus. Only one switch may be on at a time. The selection of the DISP LINE keyswitch will place the terminal in the Receive mode and display all received data until it is manually deselected or (optionally) until receipt of an ETX character. With neither switch on, the Display is disabled as a sender or receiver, but is available for message preparation, ie, to receive characters from the keyboard. The Display has a special operating mode called MONITOR MODE (see CONTROL MODE).

When neither of the lamps are flashing, the Display is in it's normal operating mode. Selecting a local receiver (receive tape, printer) and then turning on DISP SEND followed DISP LCL will enable the Display to send on the local bus. With DISP SEND and DISP LINE on, the Display will be enabled to send on-line.

When the DISP LINE and DISP LCL lamps are flashing, the Display is in the MONITOR MODE (see CONTROL MODE). Turning on either the DISP LINE or DISP LCL switch will enable the display to monitor either messages being received from the line (DISP LINE on, DISP SEND off); data being sent to the line (DISP SEND on, DISP LINE on); or local data transfer (DISP LCL on). THERE MUST BE AT LEAST ONE RECEIVER ON BEFORE THE DISPLAY CAN COPY DATA. The effect on the Display is that data being transferred between devices will be copied in the area of the Display from the current cursor position to the next to last line on the Display. The lines in this area will be continuously overwritten and there will be no loss of data on the Display segments which are not shown or before the area of the Display segment where monitoring is taking place. In this state, the Display does not appear as a terminating device, ie, it's presence on the bus will not cause a sender to start sending.

Disp Send

When in the lamp-off state, the Display is set to receive data from the assigned bus. When the DISP SEND is operated, the Display will send to the line data that has previously been placed on the Display. It will start sending from the cursor position and continue until it finds an ETX, EOT, GS or last position of the 3rd or 6th segment of the Display, or until the send operation is aborted by the operator. The Display will optionally go off-line. If, however, the terminal is in MONITOR MODE (see CONTROL MODE) the display is set to monitor the send side of the assigned bus instead of actually sending to the bus.

The DISP LINE keyswitch is automatically selected when the DISP SEND key or the S/R key is selected (see S/R MODE). If the S/R key has been selected and then the DISP SEND is selected, the terminal is taken out of the SEND/RECEIVE mode (S/R lamp is turned OFF) and put in the Send mode. The DISP LINE key may be manually selected before DISP SEND is selected.

Pressing the lighted DISP LINE key while the DISP SEND key is also lighted will cause the DISP LINE and DISP SEND keys to flash. This is an indication that an attempt has been made to abort an on-line Display Send operation. The Display will, however, continue to send the current message until a message ending character is found. If the DISP LINE key is pressed while the DISP LINE and DISP SEND lamps are flashing, transmission from the terminal will stop. Optionally, an ETX will be entered at the cursor position when transmission was aborted. To re-transmit, the DISP SEND key must be selected again.

Options associated with display operation;

When on-line, the data entered at the keyboard may be echoed to the display.

Escape sequences that are received may be displayed or performed.

At the end of a transmission:

The display will stay in Receive (DISP LINE key still lighted) or go off-line after a message is received.

The display will go into Receive On-Line after a message has been sent, or it may go Off-Line.

When the cursor reaches column 80 (or column 79 if protected data), the display may wrap to the next line.

The cursor may be HOMED before sending from the display; otherwise, the display will send from the current cursor position.

The ETX character may be retained or discarded for display purposes.

Destructive scrolling may or may not be utilized.

There is a choice of a 3 or a 6 segment display.

An ETX may be required to be on the display in order for the terminal to send from the display.

Incoming data may pre-empt the display so that it can receive on-line. A bell will ring, DTR will be enabled, the display screen may optionally be cleared and the incoming data displayed whether or not the display and/or other devices were being used for local or send on-line purposes.

Note: If the pre-empt option, the option to clear the screen and HOME the cursor and the option placing the terminal off-line at the end of a message are enabled and several messages are sent to the display in fast succession while the terminal is in Local Mode, the following occurs:

1. The initial messages are flashed on the display, with the display going momentarily off-line at the end of each message.

2. Only the final message remains on the screen because the pre-empt clears the screen each time a new message is received.

3. The initial messages, unless recorded on another device, will be lost.

If the terminal is optioned for pre-empt and for the display to stay in ON-LINE RECEIVE at the end of a received message, any other messages sent immediately after a pre-empting message will be simply added to the display following that original message.

When a protected NEW LINE is received, it may or may not be displayed as protected.

A full display may be loaded from the Send Tape, or a partial display may be loaded from the Send Tape to allow space for editing. If the option is set for partial display, a line at a time can be added to the display from the Send Tape by means of the DISP LCL key.

A. GENERAL (Contd)

5. DEFINITION OF CONTROL KEY OPERATION (Contd)

Poll/Sel and S/R

Under installer option control, the terminal is capable of operating in either the POLL/SELECT or the SEND/RECEIVE mode. ("S/R" or "POLL/SEL" keytops are available to indicate the option chosen.

Poll/select

In this mode, the line control protocol (Polling, Selecting, ACK/NAK handshaking, etc.) is enabled. All sending and receiving of messages to and from the line is controlled by character sequences from the line. Terminal will power-up with the printer on-line if available. All devices must be deselected in order to disable the POLL/SEL mode. When manually disabled, line control logic is inhibited and all on-line sending and receiving is under manual control.

The indicator lamp on this switch indicates three functions:

1. On indicates operation in the POLL/SELECT mode.
2. Off indicates manual operation without polling and selecting.
3. Blinking indicates that a bad parity character was received on the line. Blinking is manually reset by pressing the key.

Send/Receive

In this mode, the terminal operates in a free-running, non Poll/Select mode.

The teminal powers up in the text preparation mode (keyboard to display) with DISP LINE/LCL/SEND and S/R keyswitch lamps off. The printer may be optioned to come up in the on-line mode on power-up or to remain deselected.

When the S/R keyswitch is activated, the display will be placed in the on-line receive mode and the keyboard will be placed on the send line, as long as no other on-line sender has been selected, the display is NOT in MONITOR MODE, and DISP LCL is off. The display and keyboard return to the text preparation mode when the S/R keyswitch is deselected.

Mon Tape

The MON TAPE lamp is an indicator only and indicates that a MONITOR TAPE is loaded and operational. Low tape is indicated in the same manner as for the receive tape. Depressing this key will not affect the operation of the Monitor Tape.

If the Monitor Tape is rewound via the CONTROL MODE, it will be necessary to reassign the port or reposition the cassette in the drive before the MON TAPE key will indicate that the tape is operational.

This tape functions strictly as a Monitor Tape. That is, when a tape is loaded and the MON TAPE lamp turns on, the tape will copy all data sent from the terminal during either the on-line selective calling or manual operations. When the terminal operates in the Five Level Mode, the Monitor Tape copies all sent data in 8 level, before it goes through the 8 to 5 level converter. This device does not function as a local device. The Monitor Tape must be active to enable the terminal to transmit to the line (an installer option switch will disable this feature).

When a Monitor Tape is inserted in the drive an attempt is automatically made to position the tape to the first unwritten block. During this time the MON TAPE key will flash. When an unwritten block is found, the lamp will turn on solid and enable on-line transmission if the Monitor Tape is required for transmission. If low tape or full tape, is detected while positioning, the lamp will turn off and the tape will be automatically rewound. At this time, a new tape should be inserted.

The Monitor Tape will copy messages sent to the line until a low tape condition (25 or optionally 100 blocks from end) is reached at which time the MON TAPE lamp will start flashing. The tape will continue copying until the end of the current message and then turn the MON TAPE lamp off and rewind the tape.

B. LOCAL OPERATION

1. CONTROL MODE OPERATION

General

Several functions of the terminal are not accommodated by the control keys along the top row of the opcon. To select these additional functions, the keyboard and display must be placed in CONTROL MODE.

Operation

The keyboard and display are placed in the CONTROL MODE by turning the CNTRL MODE keyswitch on. The lamp will not turn on if DISP LINE or DISP LCL is on. Immediately after entering this mode, the following form is displayed with the cursor at the underline position of line 1 of the form.

-- CONTROL MODE --

1.	_	FIVE LEVEL COMMUNICATIONS INTERFACE
2.	_	SINGLE MESSAGE MODE
3.	_____	SEND TAPE BLOCK NUMBER
4.	_____	RECEIVE TAPE BLOCK NUMBER
5.	_____	MONITOR TAPE BLOCK NUMBER
6.	_	LIST SEND TAPE HEADINGS
7.	_	LIST RECEIVE TAPE HEADINGS
8.	_	MONITOR DATA ON DISPLAY
9.	_____	ERASE RECEIVE TAPE
10.	_	KEYBOARD ON LINE
11.	_	TAPE PORTS: ST = _, RT = _, MT = _
12.	_	PROGRAMMED CHARACTER SEQUENCE VERIFICATION

Each function is described and initiated as follows. Commands are set up by over-typing the underlines and executed by pressing the LINE FEED key. In the following description, references are made to UPPER case command letters (X,P,R); however, LOWER case letters are also accepted as valid commands. Execution will consist of a scan starting at line 1 and proceeding down to line 12. The scan is complete when the cursor returns to the start of the segment.

Note: The execution of the line 11 operation must not be attempted while lines affecting the cassettes are being executed.

Line 1: An X typed over the underline in line 1 will change the terminal configuration from on-line operation (8 level ASCII line interface) to an on-line 5 level BAUDOT line interface. Typing over an X with anything other than an X will cause an underline to be displayed and the terminal will revert back to 8 level operation. The Send Tape, Receive Tape and the printer must be off-line and the POLL/SEL--S/R key must be off in order to complete the mode changes. If these conditions are not met, the mode change will not take place and the old mode indicator will not be displayed. When CNTRL MODE is entered, line 1 will indicate the present terminal mode. On power-up, the terminal comes up in 8 level or optionally, in 5 level.

B. LOCAL OPERATION (Contd)

1. CONTROL MODE OPERATION (Contd)

Line 2: An X here allows the Send Tape to send ONE message only. After sending one message the sending device indicator will revert to OFF. Pressing it to ON will send another single message.

Line 3: When the CNTRL MODE switch is pressed, the current block number of the Send cassette is displayed here. To move the Send Tape to a different block number, type in the desired block number following the P (Position). The tape will be positioned so that the message starting in the designated block will be read. By typing an R over the P, the tape will be rewound to the beginning (ie, the clear leader). The block number is dynamically updated as the tape moves to a new block except during rewind which will display asterisks until the beginning of the tape is reached. If a tape movement is attempted or this line scanned while either the Send or Receive Tape key is lighted, the word "BUSY" will appear next to the appropriate tape block number on line 3 or 4 of this menu. Question marks (???) will appear if a tape is not loaded and P000 if the tape is not formatted or has been rewound.

Line 4: When the CNTRL MODE switch is pressed, the Receive Tape's current block number is displayed here. If the tape contains no more unwritten blocks, the word "FULL" will be displayed. The Receive Tape will rewind to clear leader if an R is typed in the first position and executed. Question marks will appear if a tape is not loaded or if an invalid command is attempted. The work "BUSY" will appear if this line is scanned and either of the tape indicators are on. The block number will be dynamically updated every time the Receive Tape positions to a new block except for rewinding where asterisks (***) are displayed until the rewind function is completed.

Note: Do not rewind the Receive Tape if already in position 000.

Line 5: The current position of the Monitor Tape is displayed here when CNTRL MODE is entered. Question marks are displayed if either no tape is loaded or if a rewind command is given while the tape is active. A rewind is initiated by entering an R in the first position and depressing the LINE FEED key. Asterisks will be displayed until the rewind is complete. The rewind function will not be performed if either the Monitor Tape is in the process of copying sent data or if the Monitor Tape is required for transmission and the Send Tape is on-line. The word "FULL" will be displayed if the Monitor Tape fills up and the tape will automatically be rewound. The Monitor Tape may not be repositioned except to position 000 by rewinding and then will be inoperable until it is assigned to another port or until the tape is unlatched from the cassette drive.

Lines 6,7: Typing an X in one of these lines causes a listing of the first 55 characters (or until an ETX is detected) of each message along with its block number to be displayed in the last display segment. This means that if the last segment of the display already has data on it when this listing of headings is requested, the data in that segment will be lost. The Send Tape lists from the current block, whereas the Receive Tape rewinds and then lists the headings. The listing will stop at the bottom of the display and if additional messages are to be listed, the Space Bar must be depressed to allow the next 24 messages to be listed, overwriting the previous headings (in the last display segment). Pressing the Space Bar alternately stops and starts the listing. The Block number provides an index for message locations on the tape. If before or during this operation the PTR LCL key is turned on, the printer will also copy the heading. This provides a means to obtain a hard copy of the contents of the tapes. The listing of the tape headings also permits a scanning of the tape for block check errors. If an error is detected, a bell will sound and the words "READ ERROR" will be displayed following the heading of the message containing the error.

Line 8: Placing an X in line 8 places the display in a mode that allows it to copy data being transferred between devices (eg, tape-to-line, tape-to-tape, etc). The DISP LINE and DISP LCL lamps will both flash when this mode is activated. To actually start monitoring turn off CTRL MODE, position the cursor to the line where monitoring is to start (top of monitor area) and select one of the following modes:

(a) Monitor local data transfer — DISP LCL ON
(b) Monitor data transmitted to the line — DISP SEND ON, DISP LINE ON
(c) monitor data received from the line — DISP SEND OFF, DISP LINE ON

The cursor will advance one line after displaying a line terminator or displaying a character in column 80. After displaying on the NEXT TO LAST line of the display, the cursor returns to the top of the monitor area and continues. KEYBOARD-ON-LINE (line 10) is incompatible with this feature: an X placed in line 8 while the terminal is keyboarding on-line will be disregarded.

Note: The cursor should NOT be placed on the LAST line of the display segment for monitoring purposes.

Line 9: Typing XXX in this line will cause the ERASE FUNCTION to be performed on the Receive Tape, if the tape is rewound to block 000 - on clear leader. The tape is not actually erased, but the special block indicating end of data recording is moved to the beginning of the tape. New tapes must be erased before use.

Line 10: Typing an X in this line will place the terminal in a KEYBOARD-ON-LINE mode that will allow a conversational communication with a distant terminal. The KEYBOARD-ON-LINE feature is selected by way of the CONTROL MODE if it is desired to have the display copy data sent from the keyboard only. The option to permit the keyboard to transmit blind must be disabled and the DISP LINE lamp must be OFF to permit the display to copy only data entered from the keyboard. The POLL/SEL or S/R switch must be off and there must not be another sender ON for this mode to be initiated. MONITORING DATA ON DISPLAY (line 8 of the CONTROL menu) is INCOMPATIBLE with this feature: if the terminal is already monitoring data on the Display, an X typed in line 10 will be disregarded. The Display can copy the transmitted characters by placing it in any of the following modes;

(a) DISP LINE OFF, DISP LCL OFF, keyboarding blind option disabled - keyboard to Display directly.
(b) DISP SEND OFF, DISP LINE ON and transmit data echoed back - keyboard data to Display via echo back.

In KEYBOARD-ON-LINE, characters copied on the display will exhibit the same characteristics as the receiving terminal, ie, protected data is displayed at half intensity, highlighted data at double intensity.

The keyboard has an associated 17 character buffer to support CHARACTER STEP operation on-line. CHARACTER STEP is controlled by turning the CLEAR-TO-SEND lead on and off at the interface. The CONTROL MODE lamp is used to indicate to the operator when the keyboard buffer starts to fill. The control mode lamp will start to flash when 2 characters are stored in the buffer and the bell will sound when 9 characters have been stored. The buffer will accept another 8 characters, but it is recommended that the operator stop sending when he hears the bell. The CONTROL MODE lamp will stop flashing when the buffer has emptied. Depressing the S/R key when the S/R key lamp is lit will clear the keyboard buffer and return the terminal to the message-prep mode.

If the Display is optioned to echo send data, it will copy all characters from the keyboard, including any ESC sequences. The ESC sequences sent as a result of depressing HIGHLIGHT and FORM ENTER keys will always be the ESC 3 and ESC W respectively.

The KEYBOARD-ON-LINE mode is the ONLY means of sending to the line from the keyboard when optioned for POLL/SEL, but operating in manual. HOWEVER, when operating with the terminal optioned for SEND/RECEIVE, KEYBOARDING-ON-LINE selected in CONTROL MODE with the S/R key deselected is a SECONDARY CONVERSATIONAL METHOD. The difference between this operation and the conversational method enabled by selecting the S/R key is that the Display always copies received data when the S/R lamp is lit, but the KEYBOARD-ON-LINE feature allows the operator to segregate the send and receive data; with the Display copying the send data only while another receiver (printer) copies the received data.

Note: The KEYBOARD-ON-LINE feature permits monitoring keyboarded data only with the DISP LINE lamp OFF and the option to transmit blind from the keyboard disabled.

B. LOCAL OPERATION (Contd)

1. CONTROL MODE OPERATION (Contd)

When operating in the non-POLL/SEL mode, the terminal may be optioned to automatically transmit a 1-8 character "HERE IS" sequence whenever the ACK key is pressed on the opcon. The "HERE IS" sequence is the same as the Answer-back sequence (see DISPLAY SEND/RECEIVE operation) and is enabled by the presence in the controller of a correctly addressed 410403 circuit card containing the programmed 1-8 character sequence. Care should be exercised when using the "HERE IS" feature, as in either case, the character sequence will be displayed on the screen (if display is copying keyboard data). This could cause confusion with data which is already displayed.

Line 11: There are 4 modifiable positions on this line. Typing an X in the first position will cause a scan of the ST/RT/MT positions. As long as there are no conflicts in the assignments and all tapes to be reassigned are off and rewound, the new tape port assignment will be made. Question marks will be displayed if there are any errors. Typing a 0 (zero) in any of the tape assignments will make the tape appear to be absent to the system. If the controller is optioned for no Send, Receive or Monitor Tape, the tapes can still be functional if assigned in CONTROL MODE.

Line 12: Placing an X in this line causes the controller to display all programmable character sequences that have been coded in the controller.

While in CONTROL MODE, the FORM ENTER function is disabled and both the FORM ENTER and HIGHLIGHT lamps are turned off.

2. OPCON TO DISPLAY OPERATION

General

Opcon-to-Display operation can only occur if the DISP LINE and DISP LCL switches are in the off (unlighted) condition. A limited number of opcon-to-display operations may be performed in the CONTROL MODE. The electronic, N-key, rollover keyboard provides the means for entering and editing data on the display as well as controlling the direction of all data flow in the station. The console contains two sets of editing clusters along with an ASCII keyboard arrangement capable of generating upper and lower case characters. Several keys have a repeat feature including left edit controls, dash/underline, period/greater than, character insert, character delete and space keys.

Display operation allows the storage of 5760 (or 11520) characters (80 characters/line x 72 or 144 lines) with 1920 characters displayed at any one time (80 characters/line x 24 lines). Each display line consists of up to 80 unprotected characters or 78 protected characters or a mix of the two types, with the provision that protected characters must be bounded by appropriate attribute characters, each occupying a display character position of each line. An option provides for enabling the automatic wrap-around at the end of the line when keyboarding and in addition the transmission of the automatic line-ending sequence is disabled. This permits the generation and transmission of longer line lengths to accommodate wide tractor feed printers.

Attribute characters are special, non-ASCII characters which denote the beginnings and ends of both highlighted and protected fields. They are stored in the display memory, occupy a position on the tube and are displayed as spaces. Each line that contains a beginning attribute must contain an ending attribute. The display logic will automatically insert an ending attribute in the 80th position of the line whenever a beginning attribute is entered. The automatic ending attribute will be removed when the operator enters an ending attribute in the desired location.

Since Opcon-to-Display operation is, by definition, involved solely with using the keyboard, it can best be described in terms of what occurs when depressing the various keys.

Form Enter — Depressing this key will cause an attribute to be stored at the cursor location denoting the start of a protected field. If the cursor is located immediately after another attribute, the "protect" information will be added to the previous attribute and the FORM ENTER lamp will be turned on. Otherwise, the attribute with the "protect" information will be stored at the cursor location, the cursor will be moved one position to the right and the FORM ENTER lamp will be turned on. Turning FORM ENTER on over a protected character not immediately to the right of a "protect" attribute will result in the character being changed to a SPACE and the cursor not moving. Also, a protected end attribute will be placed at the end of the line. Similarly, depressing the key again will cause the attribute with the "protect end" information to be stored in memory either directly before or at the cursor location and the FORM ENTER lamp will be turned off. At this time, the attribute at the end of a line will be removed if unnecessary. Should the cursor be moved out of a protected field (for example, moving the cursor before a "protect" attribute) and FORM ENTER is turned off, the FORM ENTER lamp will still go out. However, no attribute will be stored and an alarm will sound. Once the FORM ENTER lamp is extinguished, all areas between the "protect" and "protect end" attributes, as well as the two attributes, form a "protected field". This field, excluding the attributes, will be displayed at half intensity. The characters in this field cannot be moved or altered as long as the FORM ENTER lamp is off. When FORM ENTER is on, these characters will be treated as unprotected characters. In addition to setting up protected fields, the FORM ENTER mode may also be used to determine the right hand margin when shorter line length is desired. The sequence for setting the right hand margin is as follows:

(a) Turn FORM ENTER on, which enters the attribute in memory and increments the cursor.

(b) Depress any of the line terminating keys which enters the character and moves the cursor to the beginning of the next line (the ending attribute will automatically be inserted in the 80th position).

(c) Turn FORM ENTER off.

The end of the line now corresponds to the last character position before the right margin characters (that is, two character positions before the New line entered above). When entering characters on this line, the cursor will stop at the new end of the line and the alarm will sound. It is the same result that occurs at the end of a line without the right margin characters.

Note: An ETX character which is included in a protected field will not be recognized as a message terminator unless the FORM SEND key is selected. No "unprotect" attribute will be transmitted after the protected ETX.

Highlight — As long as the cursor is not over a protected character, the "highlight" and "highlight end" attributes are stored and the HIGHLIGHT lamp is turned on and off in the same manner as described above for the "protect" and "protect end" attributes and the FORM ENTER lamp. The resultant field, if not also protected, is an alterable field — its characters are treated as any other unprotected characters. This field will be displayed as intensified characters. If the field is both highlighted and protected, its characters follow the rule of protected characters stated above and they are displayed at half intensity. Trying to turn HIGHLIGHT on in the protected field will result in no attribute being stored, the cursor being moved one position to the right, the alarm being sounded and no function being performed. When turning HIGHLIGHT off in a protected or unhighlighted field, the results will be the same except that the function will be performed.

Alpha, Numeric and Control Characters — These characters are stored in memory at the cursor location (overwriting existing characters) by depressing the appropriate keys whenever the cursor is over an unprotected character or space. If it is over a protected character, or an end-of-line attribute, the new character will not be stored and the alarm will sound. In either case, the cursor, if not at the end-of-line, will be moved one place to the right. Several keys, including the line terminators and TAB keys provide an alternate action.

Line Terminators — Two keys — NEW LINE (≡) and LINE FEED (↓) — may be used to denote the end of a line. Optionally, RETURN (←) may be used as a line terminator. Depression of NEW LINE and LINE FEED will cause the following:

B. LOCAL OPERATION (Contd)

2. OPCON TO DISPLAY OPERATION (Contd)

When the cursor is over an unprotected character position, depression of any of these keys will cause the appropriate symbol to be displayed and will position the cursor at the beginning of the next line. If in a protected area, the character will not be displayed or stored, but the function will be performed. When any line terminating key is depressed with the cursor on the last line of the screen the appropriate symbol will be displayed and the display will "Scroll up", ie, the top line will no longer be visible, the remaining lines will move up one line on the screen and the cursor will be in the first character position of the new line which is moved up onto the screen. This action will continue until the last line in the page is displayed. If a character including the SPACE character, is written into the last position of the line and the very next action is an attempt to write a line terminating character, the character will not be overwritten but the display function will be performed. If however, the cursor is moved and then returned to this position, writing a line terminator character will overwrite the character in the last position. Characters other than line terminators or BACKSPACE will always overwrite the last character position.

When the line terminator character is placed in a line, no character can be written to its right. Also, with FORM ENTER off, any unprotected characters which may have been present to the right, prior to depressing a line terminating key, will be changed to spaces. With FORM ENTER on, any protected characters after a NEW LINE will also be changed to spaces. Multiple line terminating characters can be placed in the last line of the page as a means for advancing paper in a printer. In addition, other characters can be placed after those characters in the last line of the page. An alarm will sound for each character so entered. These characters will be transmitted unless preceded by a message ending character.

Optionally, the ability to perform a NEW LINE function on entering the RETURN at the keyboard can be disabled. RETURN is symbolized by (←) on the display, but performs no function on the display and characters may be written following this symbol without erasure.

All lines which do not contain a NEW LINE character will optionally have a NEW LINE sequence sent automatically following the 80th character of a line however, transmission time will be increased since SPACE characters will be sent to fill out the line. It is therefore recommended that a line terminating character be placed immediately to the right of the last character on the line for efficient transmission.

Tab — With FORM ENTER off, operation of this key will place a Horizontal TABulation (▶) in the cursor position, if it is unprotected and will change all unprotected characters between the Horizontal TAB (▶) character and the next TAB stop (defined below) to spaces. With FORM ENTER on, protected characters will also be changed to SPACES. The cursor is advanced to the next TAB stop. If the cursor is over a protected position, the cursor will be moved but no Horizontal TAB character will be stored in memory. the same result will occur when a TAB character is received on-line. TAB characters are not transmitted on-line but are converted to SPACE characters. A TAB stop is defined as any of the following:

(a) A TAB SET located at an unprotected character position; a TAB SET located at a protected character position is not treated as a TAB STOP.

(b) The first unprotected character position following a protected field.

(c) The first position on a line if it is unprotected.

(d) The last character position on the 72nd/144th line.

With FORM ENTER on, the action is the same, remembering that all characters are unprotected.

Left Side Editing Control Cluster — Operation of any of the keys in this cluster will not alter any information on the screen or in memory.

(a) CURSOR RETURN — Operation of this key returns the cursor to the beginning of the same line.

(b) (↑) CURSOR UP — Operation of this key moves the cursor up one line in the same column until the cursor reaches the top line on the screen. This key is repeatable. When the Display is receiving from other than the keyboard, the action is the same except after the cursor has reached the top line on the screen additional CURSOR UP commands will cause the displayed information to scroll down until the 1st line of the 1st segment is displayed. Scrolling will halt at this point.

(c) (↓) CURSOR DOWN — Operation of this key moves the cursor down one line in the same column until the cursor reaches the bottom of the screen. This key is repeatable. When the Display is receiving from other than the keyboard the action is the same except after the cursor has reached the bottom line of the screen additional CURSOR DOWN commands will cause the displayed information to scroll up until the last line of the 3rd (or 6th) segment is displayed. Scrolling will halt at this point.

(d) (→) CURSOR RIGHT — Operation of this key moves the cursor one character position to the right in the same line until the end of the line is reached. This key is repeatable.

(e) (←) CURSOR LEFT — Operation of this key moves the cursor one character position to the left in the same line until the beginning of the line is reached. This key is repeatable.

(f) HOME — Operation of this key places the cursor in the beginning of the first line of the memory.

(g) SCROLL UP — Operation of the key causes the displayed lines to move up one line at a time. The top line will be removed from view and the next line of the page will move onto the screen as the bottom line. Scrolling up will be inhibited when the last line of the last segment is at the bottom of the screen. This key is repeatable.

(h) SCROLL DOWN — Operation of the key causes the displayed lines to move down one line at a time. The bottom line will be removed from view and the previous line of the page will move onto the screen as the top line. Scrolling down will be inhibited when the first line of the 1st segment is at the top of the screen. This key is repeatable.

(i) SEGMENT ADVANCE — Operation of the key causes the next segment of the page to be displayed. For example, if Segment 1 is displayed, the screen will advance to Segment 2. If the first part of Segment 2 is displayed, Segment 2 will be displayed. If Segment 3 of a 72 line display device or segment 6 of a 144 line display device, is fully displayed on the screen, performing this function will cause Segment 1 to be displayed. The cursor position on the screen will not change during the operation of the SCROLL UP, SCROLL DOWN or SEGMENT ADVANCE keys.

Right Side Editing Control Cluster — Operation of any of the keys in this cluster will alter the information on the page.

Before describing this group of controls, two terms must be defined: LINE FIELD and CHARACTER FIELD.

A LINE FIELD is a group of consecutive lines having the same line length as defined by the location of the right hand margin and containing no protected characters other than those needed for the right hand margin. This field is bounded at the top by either the top of the first segment, a line of different maximum length or a line containing one or more protected characters other than those used for right margins. It is bounded at the bottom by either the end of the last segment, a line of different maximum length or a line containing "protect" characters other than those used for right margins.

B. LOCAL OPERATION (Contd)

2. OPCON TO DISPLAY OPERATION (Contd)

A CHARACTER FIELD is a group of consecutive unprotected characters within a line bounded on the left by either the beginning of the line, a TAB mark or a protected attribute and bounded on the right by either the end of the line, a TAB mark or a protected attribute.

The descriptions which follow are all given with FORM ENTER off. The results with FORM ENTER on are the same remembering that all characters are unprotected.

(a) CLEAR — with FORM ENTER off, unprotected data only will be cleared from the cursor position to the end of display memory. With FORM ENTER on, all data will be cleared from the cursor.

(b) LINE INSERT — with FORM ENTER off, it causes the entire line in which the cursor is located and all lower lines to move down one line on the display. The inserted line will contain all SPACES. The cursor is returned to the beginning of the inserted line. The function is not performed if anything other than unprotected SPACES or Right Margin characters exist in the last line of the LINE FIELD or if the line containing the cursor has a protected character in it other than right margin characters.

(c) LINE DELETE — With FORM ENTER off, it causes the entire line in which the cursor is located to be removed from the page and all lower lines in that particular LINE FIELD to move up one line. The last line in the LINE FIELD will contain all SPACES and the cursor will return to the beginning of the deleted line. The function is not performed if the line containing the cursor has a protected character in it other than right margin characters.

(d) CHARACTER INSERT — With FORM ENTER off, operation of this key causes the character located at the cursor and all characters from the right of the cursor, to the end of the CHARACTER FIELD, to shift one position to the right. A SPACE character will appear at the cursor position. If a character is displayed in the last character position of the character field or if the cursor is over a protected character position, the function will not be performed. This key is repeatable.

(e) CHARACTER DELETE — With FORM ENTER off, operation of this key causes the character located at the cursor to be deleted. All characters from the right of the cursor, to the end of the CHARACTER FIELD, will move one position to the left and a SPACE character will appear in the right-most position. This key is repeatable. The function will not be performed if the cursor is over a protected character position.

Additional Editing Function Controls

(a) TAB SET — (Column) — Operation of this key will cause a TAB MARK to be placed in the character position located by the cursor and all character positions below the cursor, in that column, to the end of the display. The TAB MARK is not displayed. No data on the page is altered.

Note: TAB SET should not be inserted in column 80 because HIGHLIGHT and TAB SETS in column 80 are incompatible;

(b) CURSOR TAB — Operation of this key will advance the cursor to the next TAB STOP. No Horizontal TABulation character will be written at the cursor position, nor will SPACE characters be written in any character positions.

(c) FORM SEND — This key is provided to permit the operator to send as part of a message all delimiters (ESC sequences) necessary to define special conditions, such as highlighted or protected data. That is, when sending from the display, whether locally or on-line, with FORM SEND off, only unprotected characters will be sent. Highlight attributes will be transmitted as SPACE characters. With FORM SEND on, all data (unprotected, protected, highlighted) is transmitted with the appropriate escape sequences generated for each attribute encountered.

Note: An ETX character which is included in a protected field will not be recognized as a message terminator character unless the FORM SEND key is selected.

(d) TAB CLEAR — The key clears all TAB MARKS from the cursor position to the end of the line, all TAB MARKS in the column(s) below the cursor and to the right of this column. Note that this function may result in the erasure of displayed data due to the presence of horizontal TAB characters before the TAB MARKS.

(e) FORM ENTER — See Page 2-19.

(f) HIGHLIGHT — See Page 2-19.

C. ON-LINE OPERATION

1. DISPLAY SEND/RECEIVE OPERATIONS

General

This section describes how data is handled when the display interfaces with any device other than the keyboard. In this context, the term "device" is also used to mean the line as well as the local devices.

Receive Operation

When the display is in the RECEIVE mode, many of the functions described under Local operation may be emulated by the Sending Device with the results being the same as previously described under Opcon-to-Display Operation. One consequence of this is that the sender must be aware at all times of the state of the display and the location of the cursor. For example, if in the course of receiving a message, the cursor enters a protected field and the sender has not turned FORM ENTER on (as described below) the characters received will not be displayed. The following is a description of what can be transmitted to the display and the display's action upon receipt of these characters.

(a) ALPHAS, NUMERICS and CONTROL CHARACTERS — When ASCII equivalent of the character is received and the cursor is over an unprotected position, the corresponding character is stored and displayed and the cursor is incremented with the following exceptions:

RECEIVED	DISPLAYED	FUNCTION PERFORMED
BEL	B_L	The alarm is sounded and the cursor incremented.
NUL	NU	
DELETE	″/	
ETX	Ex	The cursor is incremented and the mode changed from Receive to Local or optionally remains in Receive. *Note:* If option AC is off, ETX is not displayed.
HT	▶	Tab function
CR	←	NEW LINE function or cursor incremented one position.*
LF	↓,≡	NEW LINE function.*

C. ON-LINE OPERATION (Contd)

1. DISPLAY SEND/RECEIVE OPERATIONS (Contd)

RECEIVED	DISPLAYED	FUNCTION PERFORMED
CR,CR,LF		NEW LINE function.*
EOT	Et	Same as for ETX.
GS	Gs	Same as for ETX.

*See Page 2-42 for proper switch settings.

b. ALL OTHER FUNCTIONS — The following are the remainder of the corresponding Local functions which may be simulated by the sender. For a description of their operation, refer to appropriate section under Local operation Opcon-to-Display.

RECEIVED	FUNCTION PERFORMED
ESC ETX	Non - POLL/SEL modes only: Mode changes from Receive to Local or optionally remains in Receive but the ETX is not displayed. Printer will not FORM FEED if on-line. This action is not affected by the status of option E ("Display Received ESC Sequences").
ESO 0	Sets a TAB only at the cursor location.
ESC 1	TAB SET
ESC 2	TAB CLEAR
ESC 3	HIGHLIGHT On
ESC 4	HIGHLIGHT Off
ESC 7	Cursor Up
ESC B	Cursor Down
ESC C	Cursor Right
Bs (NO ESC)	Cursor Left
ESC G	Cursor Return
ESC H	HOME
ESC J	CLEAR
ESC R	HOME, FORM ENTER on, CLEAR, TAB CLEAR followed by FORM ENTER off .
ESC U	SEGMENT ADVANCE
ESC W	FORM ENTER on
ESC X	FORM ENTER off

RECEIVED	FUNCTION PERFORMED
ESC @	CURSOR TAB
ESC L	LINE INSERT
ESC M	LINE DELETE
ESC^	CHARACTER INSERT
ESC P	CHARACTER DELETE
ESC S	SCROLL UP
ESC T	SCROLL DOWN
ESC Y char 1 char 2 #	Positions cursor in first 3 segments of the display — char 1 and char 2 determine the line and the column numbers, respectively.
ESC K ESC Y char 1 char 2 #	Positions cursor in last 3 segments of display. See last entry.
ESC__(Underline)	NON POLL/SEL FUNCTION: If the display is on-line and the terminal is not currently in a conversational mode or transmiting, the terminal sends its cursor position as ESC Y char 1 char 2 if the cursor is positioned in segments 1-3: or ESC K ESC Y char 1 char 2 if the cursor is positioned in segments 4-6. This escape sequence is performed or displayed depending on option E. If the terminal is optioned to require an ETX in order to send, the response generated by this escape sequence will be followed by an ESC ETX.

The entire segment in which the cursor is located shall be displayed. If the cursor is illegally positioned, no movement shall occur and the sequence will be ignored. See table below.

ASCII Characters for Cursor Positioning

CHAR	COL/ROW	CHAR	COL/ROW	CHAR	COL/ROW	CHAR	COL/ROW	CHAR	COL/ROW	CHAR	COL/ROW	CHAR	COL/ROW	CHAR	COL/ROW	CHAR	COL/ROW	CHAR	COL/ROW
SP	1	(	9	0	17	8	25	@	33	H	41	P	49	X	57	`	65	h	73
!	2	)	10	1	18	9	26	A	34	I	42	Q	50	Y	58	a	66	i	74
"	3	*	11	2	19	:	27	B	35	J	43	R	51	Z	59	b	67	j	75
#	4	+	12	3	20	;	28	C	36	K	44	S	52	[	60	c	68	k	76
$	5	,	13	4	21	<	29	D	37	L	45	T	53	\	61	d	69	l	77
%	6	—	14	5	22	=	30	E	38	M	46	U	54	]	62	e	70	m	78
&	7	.	15	6	23	>	31	F	39	N	47	V	55	^	63	f	71	n	79
'	8	/	16	7	24	?	32	G	40	O	48	W	56	—	64	g	72	o	80

C. ON-LINE OPERATION (Contd)

1. DISPLAY SEND/RECEIVE OPERATIONS (Contd)

When receiving on the display locally from the Send Cassette with option AS on, the DISP LCL lamp will turn off after each line starting with line 61 if set for 3 segments or 129 if set for 6 segments. It will stop with the cursor at the start of the line with a GS displayed at the cursor position. This allows messages of more than 72 lines to be received on the display without incurring loss of data due to overwriting at the end of line 72 or 144. Subsequent depressions of the DISP LCL key will result in one line at a time being transferred from the tape to the display. Reception from the line will not stop at line 61 or 129, but continue until an ETX, EOT or GS is received. When option AS is off a full display (72 or 144 lines) are loaded from the cassette to the display.

When the display is copying received data, after displaying a character at the end of the line, the cursor may be optioned to move to the beginning of the next line as if a line terminator were received. This line wrap feature will affect the local operations also.

The display may be turned off while receiving by depressing the lighted DISP LINE or DISP LCL key.

Display Receive with protected data on the display — The following describes what takes place if either non-protected or protected data is received with protected data stored in the display buffer.

If the display is in the receive mode and protected data is on the display in the area of the screen onto which received data will be written, the incoming data will be lost when it meets the protected data. This occurs because the protected data, plus the attribute characters, cannot be over-written by incoming characters that would have been written in those character positions.

If the display is in the on-line receive mode and there is protected data on the display when protected data is received, all data in the areas into which the incoming data is written will be over-written and lost. Under these conditions, all received data would be protected.

If the display is in the receive mode and there is protected data on the display and the received data is positioned below the area where the protected data is, the incoming data will be received in its entirety.

The "LF LF NNNN" sequence is recognized as a message ending sequence in ASCII messages received by the terminal and an ETX will be appended to the sequence to properly deliniate such messages.

Destructive Scrolling — Is an optional feature that permits receiving data on the display beyond the 72/144 lines with the limitation that only the newest 72/144 lines are retained. If the destructive scrolling option (option AG) is selected, it should not be used simultaneously with protected data and/or TAB SETS stored in the display buffer. When destructive scrolling is enabled, the following will occur when data is received:

No change to the terminal characteristic shall occur until data is to be written beyond the limits of the display buffer (72/144 lines). When a scroll beyond the last line in the buffer occurs, the lines on the screen and in the buffer are each moved up, with the "oldest" line being totally dropped from the buffer and the data lost. This will occur each time a subsequent scroll is necessary. Only the "newest" 72 or 144 lines remain in the display buffer.

If protected data and/or TAB SETS were stored in the display buffer at the time that destructive scrolling takes place, the last line of the display moves up one line including any protected data and/or TAB SETS. The first line of the display is dropped, including TAB SETS and protected data. The last line is now clear of all data, including protected data and/or TAB SETS and is ready to receive new data.

When the display is taken out of the on-line receive mode after destructive scrolling has occurred, the terminal operates in the local edit prep mode. The "home" position will still be the first character position of the first segment, but due to the scrolling function, the first line will contain the oldest data. SCROLL UP and SCROLL DOWN shall be bounded by the "oldest" and "newest" lines.

Destructive Scrolling Disabled — If the destructive scrolling option is not selected, the terminal will operate in the following manner upon the receipt of on-line data:

No change to the terminal characteristic will occur until data is to be written beyond the limits of the display buffer (72/144 lines). When this limit is reached, depending on whether or not the line-wrap option has been selected the following will occur:

Line-wrap disabled — Additional incoming data will be placed at the end of the last line up to the last position of the last line. If data is still being received, the cursor will remain in the last position in the last line and the additional incoming characters will be written over the previous character, with the exception of NEW LINE and LINE FEED characters which will not be accepted in this position.

Line-wrap enabled — Incoming data beyond the display buffer limit will over-write the last line of data on the display.

The end result is that while the first 72/144 received lines are preserved, the lines beyond this limit are lost where the display buffer is concerned.

After the limits of the display buffer are reached, TAB SETS and CLEARS are ignored, as all incoming data is automatically entered in the last line. Before the limits of the buffer are reached, TAB functions work in the normal fashion.

Protected data already present on the receive terminal's screen may cause incoming data to be partially lost, unless the transmitting terminal sends properly formatted data. With FORM ENTER selected, all data on the receive terminal, including protected data, will be over-written. The sender may also precede the message with a CLEAR (ESC R) function to insure that all protected data areas are erased and the cursor sent to the "home" position.

Pre-Empt — Is an option which results in the following:

Any character sent to the terminal will pre-empt the display from its non-receive mode (local, data prep, etc.) to the on-line display mode, regardless of the on-line state of any other receiver.

When the answer-back feature is enabled, the terminal will not pre-empt on receipt of an "ENQ" character, but will respond with the answer-back sequence to indicate that the terminal is ready to copy data. Receipt of any other character will pre-empt the display to the on-line mode.

Upon pre-empt, the cursor will optionally go the "home" position, all TAB settings will be cleared, all data — protected or unprotected — will be cleared from the display and the FORM ENTER and HIGHLIGHT keys will be turned off. If the pre-empt clears display option is disabled, the display will not be affected.

Received data will be displayed (or the required function performed) through three or six segments, depending on how option AH (which determines the number of segments) and option AV (which determines pre-empt cursor position) have been set. Option AG (destructive scrolling) determines what happens to data received after the 72nd or 144th line is filled.

If the "pre-empt clears display" option is not enabled and if the cursor is positioned above data containing protected data when pre-empt occurs, the display will behave as when on line. Incoming data will be lost when it meets the protected data and cannot over-write it, unless the incoming data is sent as protected data.

If the display is sending on-line when the pre-empt message is received, transmission will be aborted. An ETX will then be sent (if option B is enabled) and the display will copy the received message.

Note: If the pre-empt message ends and option N puts the terminal into LOCAL, a new pre-empt message may erase or overwrite the display buffer, so that the earlier pre-empt message could be lost unless it was also copied by another receiver.

C. ON-LINE OPERATION (Contd)

1. DISPLAY SEND/RECEIVE OPERATIONS (Contd)

Urgent Traffic and Priority Message Detection Feature:

The terminal can optionally monitor incoming data for receipt of an Urgent Traffic or Priority Message. On receipt of such message the terminal will flash all opcon lamps and repeatedly sound the opcon bell until it is manually reset by the operator.

An Urgent Traffic Message is here defined as a message prefaced by the character sequence "XCRITIC" or by one of two previously defined four character sequences.

A Priority Message is here defined as a message prefaced by the start-of-header sequence "ZCZC" and containing one of the three priority message identification characters (O,Y,Z) as the first character of the second line of the header.

The terminal can thus be optioned to monitor incoming data in 5- or 8-level code for any of the following:

(a) The character sequence "XCRITIC".

(b) The characters "O", "Y" or "Z"; appearing in the first column of the line following the sequence "ZCZC".

(c) Any one of two programmable four-character sequences coded in an optional 410403 circuit card.

Note: All programmable Urgent Traffic sequences coded may be verified using the terminal's Control Mode menu.

If the terminal is off-line (no on-line receivers) when the Urgent Traffic or Priority Message is received, the display will be pre-empted to the receive mode and will copy the message. If a message was being sent from the display, the send message will be aborted. If the "pre-empt clears display" option is enabled, the screen will be cleared and the message will start on line 2; otherwise, the message will start on the line following the current cursor position.

If the terminal is off-line (no on-line receivers) and is optioned to power-up with the printer on-line (option F enabled), an attempt will be made to put the printer on-line to copy the message. The printer will not be placed on-line if it is currently selected as a local receiver or out-of-service (out of paper, cover open, etc). The printer status will not affect the display operation described above.

The operator can reset the terminal's "FLASH MODE" by pressing the "CLEAR" key in the opcon. The bell sound will stop and the opcon lamps will again display the current terminal status.

Answer-back Feature:

When operating in the non-POL/SEL mode, the terminal may be optioned to automatically respond with a 1-to-8 character "Answer-back" sequence upon receipt of the "ENQ" character.

The answer-back sequence will be transmitted if the terminal's Clear to Send (CTS) lead is enabled and the terminal is capable of copying received data. To copy receive data, the terminal must have at least one on-line receiver or be optioned to pre-empt the display to the on-line mode on received data.

Note: The Urgent Traffic pre-empt described above is limited to Urgent Traffic and Priority Messages and will not affect the on-line status of the terminal for answer-back.

The answer-back feature will be enabled by the presence in the controller of a correctly addressed 410403 circuit card containing the programmed 1-to-8 character answer-back sequence.

When the answer-back feature is implemented, the "ENQ" character will not be copied by any of the on-line receivers and will not pre-empt the display to the receive mode.

Care should be exercised when using the answer-back feature, as in either case, answer-back sequence will be displayed on the screen. This could cause confusion with data which is already displayed.

Send Operation

With the controller optioned for SEND/RECEIVE (non POLL/SEL) mode, pressing the DISP SEND key will cause the contents of the display from the current cursor position to the first available "end of message" character to be transmitted on-line.

Transmission will occur only while the terminal's Clear to Send (CTS) lead is enabled.

The depression of the DISP SEND key will be ignored if the send tape is currently transmitting on-line or if the DISP LCL key is selected.

If the printer or receive tape has been selected as a local receiver, pressing the DISP SEND key will not initiate transmission. Pressing the DISP LINE key will cause the tape message to be transmitted on-line and pressing the DISP LCL key will cause the same message to be sent locally to the selected local receiver.

The terminal may be optioned to automatically "home" the cursor before initiating transmission. When this option is enabled, the display will always begin transmission from the beginning of line 1.

The message ending characters are here defined as ETX, EOT, and GS. After an ETX, EOT, or GS is encountered, display transmission stops. The ETX and EOT characters are transmitted, the GS character is not.

If a displayed ETX is not required for transmission and if no ETX, EOT, or GS character is stored in memory, an ETX will be generated and sent after the last character in the 72nd or 144th line.

If a line terminating character is absent from any line and the LINE WRAP option is disabled, a line ending sequence will be generated and sent after the character in the 80th position of that line. Transmission then resumes at the beginning of the next line.

Note: If the terminal is operating in the Five Level Mode, the automatic line ending sequence will not be sent in order to preserve 5- to 8- level character count.

Codes transmitted for any displayed line terminators will depend on controller switch settings.

SEND with FORM SEND off

When the display is sending with the Form Send off, the equivalent ASCII code for the displayed characters will be transmitted, except for the following:

(a) When an attribute is encountered the terminal reacts as follows:

1. Attributes denoting the beginnings and ends of highlighted only fields will be changed to spaces before being sent.

2. All protected fields, together with the corresponding beginning and ending attributes, will be skipped (not sent).

(b) TAB SET MARKS will not be sent on-line.

(c) Horizontal TABS (▶) are transmitted as SPACES.

C. ON-LINE OPERATION (Contd)

1. DISPLAY SEND/RECEIVE OPERATIONS (Contd)

SEND with FORM SEND on — When the display is sending with the Form Send on, the equivalent ASCII code for the displayed characters will be transmitted, except for the following:

(a) When an attribute is encountered, the following escape sequences will be transmitted:

INFORMATION IN ATTRIBUTE	SEQUENCE SENT
Start of Protected Field	ESC W
End of Protected Field	ESC X
Start of Highlighted Field	ESC 3
End of Highlighted Field	ESC 4

(b) When a TAB SET MARK is encountered at a character position, the sequence ESC 0 is sent before the data found at that location.

(c) Horizontal TABS (▶) are transmitted as spaces.

To manually abort display transmission:

ON-LINE — To minimize the occurrence of an accidental abort, two steps must be taken to abort a display transmission to the line. On the first depression of the DISP LINE key, the DISP LINE and DISP SEND lamps will flash to indicate that the first step has been registered by the terminal, but transmission will not be affected. A second depression of the DISP LINE key will abort transmission and stop the cursor immediately after the last character to be transmitted.

LOCAL — When transmitting from the display to a local receiver, a single depression of the DISP LCL key will abort the transmission and stop the cursor immediately after the last character to be transferred.

If the option to "send ETX on premature end of message" is enabled, aborting an on-line display transmission will cause an ETX to be transmitted and displayed on the screen at the position of the cursor.

When a GS is encountered during transmission, the send function is terminated but the GS will not be transmitted unless the transfer is to a local device. The GS is intended primarily to allow the generation of multi-page messages on cassette and should not be used as a message terminator for on-line transmission in POLL/SEL mode.

ZNY TRANSMISSION CONTROL FEATURE (OPTION AW)

If the terminal is so optioned, it will monitor transmissions locally within the terminal, or on-line from the terminal, for character sequences containing the "ZNY" character string. Option AW is the controlling option of this feature. If option AW is OFF, then no monitoring will occur and any data or character sequences can be sent from the terminal. If option AW is ON, then any sequence beginning with "ZNY", (upper or lower case), followed by a space, followed by any other characters, will not be allowed to be sent and the terminal will enter the lock-up state (explained below).

Option AZ will control the character sequence "ZNY EEE". If option AZ is OFF, then "ZNY EEE" will be allowed to be sent, even if option AW is on. If option AZ is ON, then "ZNY EEE" will not be allowed to be sent. Other character sequences can be exempted from transmission control (by option AW) by being programmed on an optional PIT/SID (410403) circuit card. Up to eight characters can be programmed on the 410403 (either upper or lower case) and thus will be allowed by the terminal to be sent. The sequence "ZNY EEE" is "part" of option AZ and therefore need not be programmed on the 410403, although it can be (this situation is explained on the following page).

These two options work in direct conjunction with each other if option AW is ON. The terminal will be screened for transmission of any of the following combinations:

(a) All messages containing a "ZNY" character sequence (Option AW ON, and Option AZ ON — no 410403 card present).

(b) All "ZNY" messages except those bearing a "ZNY EEE" character string (Option AW ON, and Option AZ OFF — no 410403 card present).

(c) All "ZNY" messages except those bearing a "ZNY" character sequence matching one of the character sequences coded on a 410403 circuit card (Option AW ON, Option AZ ON — exempted character "read" from 410403 circuit card present). This character sequence can be "EEE", which would "defeat" the fact that Option AZ is ON.

(d) All "ZNY" messages except those bearing a "ZNY EEE" sequence and/or bearing a "ZNY" sequence matching one of the character sequences coded on a 410403 circuit card (Option AW ON, Option AZ OFF — exempted character(s) "read" from 410403 card present). In this instance, the sequence "ZNY EEE" is also exempted because Option AZ is OFF. It should be noted by this fact that effectively 9 character sequences can be exempted from control ("ZNY EEE", and 8 others from the 410403 circuit card).

Note: Character sequences programmed as part of the Answer-back feature will not be monitored for ZNY classifications.

Upon detection of a "ZNY" sequence, (other than b, c, d, above) the terminal will abort the respective transmission, replacing the last character sent with an ETX. No further transfer of information will be allowed until the appropriate recovery procedure is executed by the operator. The terminal will notify the operator of a transmission lock-up by ringing the opcon bell and displaying an explanatory message that can be viewed by pressing the CNTRL MODE key. The warning message is displayed highlighted at the bottom of the Control Mode menu and reads as follows:

RESTRICTED ZNY CLASSIFICATION DETECTED
FURTHER DATA TRANSFERS DISABLED
CHECK SECURITY

The audible alarm can be reset by pressing the CLEAR key, however no further transmissions will be allowed until the entire recovery procedure is accomplished. The procedure is as follows:

(a) Press CNTRL MODE key if lighted.
(b) DISP LINE + DISP LCL lamps must be off.
(c) Press HOME.
(d) Turn FORM ENTER lamp on.
(e) Press CLEAR key.
(f) Turn FORM ENTER lamp off.

If Send Tape was active during lock-up, the following must also be done:

(a) DISP LINE + DISP LCL lamps must be off.
(b) Press CNTRL MODE — lamp lights.
(c) Insert an "R" over the "P" character in line 3 of the menu.
(d) Press LINEFEED key on opcon.

The terminal will signal the successful completion of the recovery procedure by removing the highlighted warning message from the Control Mode menu, and resuming normal operations. The operator can now turn off CNTRL MODE, and the opcon lamps will again indicate the current status of the terminal.

C. ON-LINE OPERATION (Contd)

2. OPERATION IN 5-LEVEL COMMUNICATION MODE

General

The terminal may be placed in the Five Level mode of operation through controller option AQ or by placing the display in CONTROL MODE and selecting the Five Level Communication terminal operation. When each device is placed in the on-line mode, they will send to or receive through the Line interface with Five Level code and without selective calling or polling protocol. Therefore, before going to or coming from the line, all data goes through a 5-8 level conversion.

In the 5-Level mode, and in the 8-Level ASCII mode, when the "LF LF NNNN" sequence is received on-line, an ETX is appended to the end of the sequence for internal operations. The display will copy the ETX only if the controller is optioned to retain ETX characters. When transmitting on-line in 5-Level mode, an ETX following the sequence is deleted.

Note: Optionally, a NEW LINE (≡) will be transmitted as the "CR CR LF" sequence and a received "CR CR LF" sequence will be translated and displayed as a NEW LINE (≡).

Device Operation

SEND TAPE — When SEND TAPE LINE is operated, the Send Tape operates through the line interface to 5 level equipment. Operating SEND TAPE LCL allows it to send to any of the terminal's selected receiving devices (Local operation is 8 level).

RECEIVE TAPE — When REC TAPE LINE is operated, the Receive Tape can copy data from the receive side of the line interface. This is 5 level data from an external device. Operating REC TAPE LCL allows the Receive Tape to receive from whatever sending device is connected to the Local bus.

PRINTER — The Printer operation is identical to that of the Receive Tape, except that, in addition, it has an installer option switch which allows it to also be placed on the Send line to monitor data that is being sent to a 5-level receiver. The printer operates on the 8-level side of the 8 to 5 converter.

DISPLAY — The display can be placed in the on-line receive mode by pressing the DISP LINE key, and in the send mode by pressing the DISP SEND key.

OPCON — For Opcon-to-display operation, see Page 2-18.

MONITOR TAPE — See MON TAPE, Page 2-14 for details.

Message Preparation

Messages Prepared on Display

In the five level mode, messages prepared on the display to be transmitted on-line do not need to start with an SOH or end with an ETX or EOT. A GS, ETX, or EOT at the end of the message will cause transmission to stop, but will not be transmitted.

Note: When the printer is copying on-line transmissions, the Baudot end-of-message sequence "LF, LF,N,N,N,N" will not automatically form-feed the printer. The use of an ETX or EOT at the end of the message will ensure that the printer copy follows the same paging format as that of the received messages.

Messages may be prepared on the display and sent to the receive tape for later transmission on-line, or for retrieval back to the display and subsequent transmission on-line. The message delimeters used will affect the manner in which the messages on the tape can be referenced and transmitted.

(a) If SOH and ETX or EOT are used as delimiters, messages can be individually transmitted (Single Message Mode) and individually located by viewing tape headings. However, the delimiters will be transmitted to any selected local receivers.

(b) Omitting the SOH will result in a dummy SOH being stored at the beginning of the message. Message handling is the same as "a" above with the exception that no SOH will be transmitted.

(c) If GS is used as a message ending character on the display, the messages on the tape cannot be individually transmitted as single messages to the line or located by the "LIST HEADING" procedure. However, they can be located by transferring them from the tape back to the display where the GS will be recognized.

Message Preparation from 5 Level Input

A short message (less than 72 or 144 lines, dependimg on the number of display segments enabled) may be transferred directly to the display from the send device. It can then be formatted and handled as described above. Multiple messages or long messages (greater than 72 or 144 lines) should be transferred to the Receive Tape. The cassette can then be rewound, placed in the Send Tape and transferred to the display. The transfer of data from send tape to display can be stopped manually by operating the DISP LCL key or will stop automatically when the 61st or 129th line of the message is displayed. Additional lines can then be retrieved, one at a time, by pressing the DISP LCL key. This automatic stop at the 61st or 129th line is optional and allows 12 or 15 lines, respectively, for reformatting and editing of the message.

3. POLL/SELECT TERMINAL OPERATION

The terminal becomes an On-Line Terminal when power is turned on and the terminal is optioned for POLL/SELECT (vs. SEND/RECEIVE). When operating as a POLL/SELECT terminal, there are four operational states:

(a) On-Line Selective calling.
(b) On-Line Manual Control.
(c) Local.
(d) Control.

When on-line selective calling operation is selected, message transfer is accomplished through selections and polls of the terminal's devices. Also, specific devices may be used to either monitor all sent or looped-back receive data. These will be described in detail under the various device descriptions that follow.

In On-Line Manual operation, all data transfer will be manually controlled. That is, no automatic line control procedures will be utilized. The first device ready to send will send, and as any devices are switched to receive, they will receive.

When any local or on-line operation is selected, the sending devices may transmit data either one message at a time or all available data may be transmitted at once. These modes are selected when the Display is in the CONTROL MODE.

For proper operation, the controller must be optioned to power-up in EIGHT LEVEL MODE (Option AQ off).

For proper operation of the on-line terminal a 4 wire communications channel or it's equivalent is required.

Control over sending and receiving functions is done through the use of control sequences received by the terminal from a message processor (Control Station). These controls consist of 4 character ASCII character sequences used to indicate to the terminal if a send data (POLL) or a receive data (SELECT) function is to be performed.

All polling and selection sequences are to be preceded by the deselect character EOT.

All polling and selection sequences are prefaced by a programmable unique two character STATION IDENTIFY (SID) sequence. These two characters may be any combination of ASCII characters (except those used for communication control, "*" and DELETE). It is recommended that upper and lower case alphas or numerals be used.

C. ON-LINE OPERATION (Contd)

3. POLL/SELECT TERMINAL OPERATION (Contd)

The terminal powers up in Blind Mode whose function is to ignore all incoming data except EOT. A received EOT switches the terminal to POLL/SELECT Control Mode to decode polling and selection sequences. Selection decoding continues until receipt of an SOH, at which time the terminal will switch to Text Mode, if any of the terminal devices have been selected, or back to Blind Mode, if no devices have been selected.

A received EOT will be converted to ETX and put the terminal back in POLL/SELECT Control Mode.

Polling

For polling sequences the two character SID is followed by two additional control characters — DC1 ENQ. Upon receipt of this four character polling control sequence two conditions can result:

1. If the station has no message(s) to send, a deselect character EOT will be transmitted to the line to indicate no traffic and the terminal will assume an IDLE state.

2. If the polled terminal has a message to send, it will respond by switching to TEXT MODE and transmitting an SOH character followed by the message text and an end of message character — ETX or EOT. Additional polling sequences are required for each message transmitted.

Poll message control may be by-passed by switching out of the POLL/SELECT mode. Under this mode of operation, messages will be transmitted to the channel by manual control. No prior select code is required.

During operation of the terminal in the send message (POLL) mode, the line printer associated with the terminal will be conditioned to copy the send data, either echoed on the receive data line by external equipment or internally by means of an option switch.

If send data is echoed back on the receive data line by external equipment, the display and printer (if selected) can copy the keyboard characters via the echoed data. If the external echo-back is not implemented, the keyboard characters can be simultaneously displayed, printed and sent to the line. An installer option switch to enable the keyboard to transmit blind must be switched ON and the option to have the printer copy the receive line only should be enabled (switch OFF), when send data is being echoed by external equipment (eg, an encryption device).

After the transmission of a message ending with ETX, the printer will be conditioned to copy an unselected response and the terminal will remain in TEXT Mode. That is, the printer will copy all incoming data until an EOT is received. Messages ending with EOT will switch the terminal back to POLL/SELECT Control Mode. To assure that messages will be copied by the printer at the end of transmission, the terminal should be optioned to require the printer in order to send.

Terminals polled which have send traffic available, but which have the associated printer optioned to copy send traffic and in an out-of service condition will respond within two seconds with the no traffic response character — EOT.

Selecting:

Four selection code sequences are recognized by the terminal:

1. Messages to be copied by the PRINTER ONLY are identified by a selecting code sequence consisting of the two character SID sequence followed by "= (equals) ENQ". Upon recognition of the select sequence, the terminal will respond with either ACK (printer ready to receive) or NAK (printer not ready to receive). The response may be delayed by no more than four (4) seconds to allow the printer motor to turn on. An ACK response will cause the terminal to assume the receive state. An internal option switch is available to force the selection code "=" to function as selection code DC2 described below.

2. Messages to be copied by both THE LINE PRINTER AND THE RECEIVE CASSETTE unit are prefaced by the two character SID sequence followed by "DC2 ENQ". Upon recognition of this sequence, the status of both devices will be checked. If either device is in the OFF or out-of-service mode, the terminal will respond with a NAK; otherwise, an ACK response will be made. Messages to be copied MUST begin with SOH and end with ETX. Receipt of an EOT character places the terminal in the IDLE mode. If the printer is available, but the tape is not, this selection will still cause the printer's motor to turn on.

3. Messages to be copied by the DISPLAY ONLY are prefaced by a selection sequence consisting of the two character SID sequence followed by "DC3 ENQ". If the display is able to receive from the line, the terminal will send an ACK response; otherwise, NAK will be sent. Messages to be copied MUST begin with SOH and end with ETX. Upon receipt of the ETX character, the display will either stay in receive mode or switch to Local, depending on the state of an installer option switch.

4. Messages to be copied by the RECEIVE TAPE ONLY are prefaced by the two character SID sequence followed by "DC4 ENQ". If the tape is able to receive the message, the terminal will respond with ACK; otherwise, it will send NAK. The response may be delayed by no more than four (4) seconds to allow for tape positioning. Messages to be copied MUST begin with SOH and end with EOT.

4. SEND/RECEIVE TERMINAL OPERATIONS

General

The terminal, when the SEND/RECEIVE option is enabled, powers-up in the Local (or Message Prep) Mode. The printer will not be automatically selected as a on-line receiver unless the terminal is optioned as such.

When on-line transmission of a message is necessary, it can be accomplished as follows:

(a) Through device selections (display, send tape), if the batch mode is being used.

(b) By selecting the S/R keyswitch, which will put the operator into a conversational mode with the keyboard on the Send line.

(c) Or by entering the CONTROL MODE and placing the KEYBOARD ON-LINE, a secondary conversational mode permitted in a SEND/RECEIVE environment which allows keyboarding on-line without the display acting as a receiver.

Specific devices may be selected/optioned to monitor on-line transmissions: the printer, monitor tape or the display.

When a local or on-line operation is selected, the send tape may transmit data either one message at a time or all available data may be transmitted at once. This selection is made when the display is in the CONTROL MODE. (See CONTROL MODE operation.) However, DISP SEND on-line will only transmit to the next ETX, EOT or GS.

Keyboard Operation

Local: With the S/R, DISP LINE and DISP LCL lamps off, characters entered at the keyboard are copied to the display. The cursor may be moved at will and the line/character insertion and deletion capabilities are available for editing purposes. Messages may be prepared to transmit to the line or local devices. The cursor must be correctly positioned for sending purposes from the local mode, if the HOME ON SEND option is not selected.

C. ON-LINE OPERATION (Contd)

4. SEND/RECEIVE TERMINAL OPERATIONS (Contd)

On-Line

With the S/R keyswitch on, characters entered at the keyboard will be sent to the line. The display will copy the sent data unless the terminal is optioned to transmit blind from the keyboard. Any devices monitoring the SEND LINE will copy the keyboard characters as well. This mode is similar to the KEYBOARD ON-LINE capability.

When in the SEND/RECEIVE (conversational) mode and the S/R lamp is lighted, only the keyboard can send to the line. It is possible to again send data entered during the SEND/RECEIVE mode by deselecting the S/R key, appropriately positioning the cursor (unnecessary if the HOME ON SEND option is selected) and selecting the DISP LINE and DISP SEND keyswitches. This will enable the terminal to send the text from the cursor position to the first ETX, after which the terminal will automatically deselect the DISP LINE and DISP SEND keyswitches.

Escape sequences may optionally be sent or not sent for all the editing control keys and the CLEAR, TAB CLEAR, TAB SET, FORM ENTER and HIGHLIGHT control keys.

If send data is echoed back by an external device, the terminal must be optioned so that characters entered at the keyboard are not displayed (option B1-7 on). Otherwise, keyboard characters would interfere with the data being echoed back and cause garbling on the display.

Other options associated with the keyboard operation:

When a CARRIAGE RETURN is entered at the keyboard, the NEW LINE function may be performed.

When INT (on the NAK position of the keyboard) is entered, a one second line break occurs.

CARRIAGE RETURN and LINE FEED function locations on the keyboard may optionally be changed.

When the display is copying keyboard send data, the cursor will LINE-WRAP regardless of the option setting.

D. DESCRIPTION OF CASSETTE OPERATION

The tape cassette units provide bulk storage of user data and data being stored block by block on Phillips type cassettes. Blocks are numbered consecutively from 0 to 500. Block zero is recorded on the tape in the ERASE mode and is reserved for system use. Each data block is 255 words (510 bytes) long. User data is recorded on blocks # 1 to # 500. The first 253 words of each block records data, the 254th word the block number and the 255th word an error check character.

Data to be written on the Receive Tape is accumulated in one of 2 data buffers. The two data buffers speeds up the unit operation by having the contents of one data buffer being recorded on tape while the other is being filled. After outputting the last data word to the Receive cassette, the block number and error check character are recorded. Data blocks are recorded sequentially with markers until block number 476 is reached, at which time a low tape flag bit is set in the device function word. After recording block 500, an "Out of Tape" flag bit is also set in the device function word and further recording is inhibited.

Recording data on the Monitor Tape is the same as described for the receive tape except that only one data buffer is used.

Inserting a tape in the Monitor unit drive automatically positions the tape to the first available (unrecorded) block.

Inserting a tape in the Send Tape unit automatically positions the tape to block #1.

The Receive Tape is positioned to the first available (unrecorded) data block when it is selected by the user for a receive operation.

In order to prevent mechanical damage to the tape all tapes should be rewound before being removed from the tape drive; to accomplish this all tape drives respond to a user (operator) entered Rewind command.

The Send Tape only may be user positioned to a specific data block on the tape. Requests to position the tape to block zero or block numbers greater than 500 are invalid and are rejected.

Tapes to be used on this system must be formatted by use of the ERASE mode on the Receive Tape unit. The tape ERASE (FORMAT) Routine writes a standard length (255 words) data block on the tape in order to initialize the tape for use. The FORMAT block is identified as block zero and consists of 253 sequentially numbered data words followed by the block number and error check character.

Self-Test and Error Detection Features:

When a cassette is inserted into a cassette drive, a self test is performed by the drive on the cassette, if the tabs on the cassette are positioned to enable data to be written on the cassette.

The self-test on the cassette consists of writing 63 words on block 0 and then reading these words to verify the write and read circuits of the cassette drive.

Self-test failure is indicated by a flashing light on the cassette drive lid. If self-test is successful, the light on the lid of the drive will light when the tape has been positioned beyond block 000.

Note: If the cassette drive is assigned as Send Tape, the tape will automatically be positioned to block 1 after self-test and the indicator light will be turned on. If the cassette drive is assigned as Receive or Monitor Tape, the indicator lamp will be off and will turn on only after the tape has been positioned to the first available block.

If self-test fails, one of two things is indicated:

(1) The read or write functions of the cassette drive are faulty;
or
(2) The cassette itself is faulty.

To determine which is at fault, insertion of a different cassette (preferably one which is known to be functional) is suggested. If this tape passes self-test, the failure was in the previous cassette vs. the drive itself.

Data read from either the Send Tape or the Receive Tape (list headings mode from CONTROL MODE menu) is checked for errors by means of an error check character recorded on the tape. If an error is detected, up to four additional reads will be attempted to clear the error. If the attempt to read error-free data fails, the data as last read is accepted but a flag bit is not set in the device function word, a bell will sound and "READ ERROR" will be displayed after the heading of the message in which the error occurred.

D. DESCRIPTION OF CASSETTE OPERATION (Contd)

ASCII to Baudot Conversion Table

ASCII (ITA5) INPUT	CONVERTS TO	BAUDOT (ITA2) OUTPUT	ASCII (ITA5) INPUT	CONVERTS TO	BAUDOT (ITA2) OUTPUT
NUL‡		BLANK	NAK‡		BLANK
SOH‡		BLANK	SYN‡		BLANK
STX‡		BLANK	ETB‡		BLANK
ETX‡		BLANK	CAN‡		BLANK
EOT‡		BLANK	EM‡		BLANK
ENQ‡		BLANK	SS (SUB)‡		BLANK
ACK‡		BLANK	ESC‡		BLANK
BEL		BELL (Figures S)	FS‡		BLANK
BS‡		BLANK	GS‡		BLANK
HT‡		BLANK	RS‡		BLANK
LF‡		LINE FEED	US‡		BLANK
VT‡		BLANK	SP‡		SPACE
FF‡		BLANK	!		! (Figures F)
CR‡		CARRIAGE RETURN	"		" (Figures Z)
SO		FIGURES	#		# (Figures H)
SI		LETTERS	$		$ (Figures D)
DLE‡		BLANK	%‡		BLANK
DC1‡		BLANK	&		& (Figures G)
DC2‡		BLANK	'		' (Figures J)
DC3‡		BLANK	(		((Figures K)
DC4‡		BLANK	)		) (Figures L)
*‡		BLANK	H, h		H
+‡		BLANK	I, i		I
'		' (Figures N)	J, j		J
-		- (Figures A)	K, k		K
.		. (Figures M)	L, l		L
/		/ (Figures X)	M, m		M
0		0 (Figures P)	N, n		N
1		1 (Figures Q)	O, o		O
2		2 (Figures W)	P, p		P
3		3 (Figures E)	Q, q		Q
4		4 (Figures R)	R, r		R
5		5 (Figures T)	S, s		S
6		6 (Figures Y)	T, t		T
7		7 (Figures U)	U, u		U
8		8 (Figures I)	V, v		V
9		9 (Figures O)	W, w		W
:		: (Figures C)	X, x		X
;		; (Figures V)	Y, y		Y
< ‡		BLANK	Z, z		Z
=‡		BLANK	[‡		BLANK
> ‡		BLANK	\ ‡		BLANK
?		? (Figures B)	] ‡		BLANK
@‡		BLANK	^ ‡		BLANK
A, a		A	` ‡		BLANK
B, b		B	{ ‡		BLANK
C, c		C	| ‡		BLANK
D, d		D	} ‡		BLANK
E, e		E	~ ‡		BLANK
F, f		F	— (Underscore)		LETTERS
G, g		G	DEL		LETTERS

‡ Denotes inhibit of LETTERS-FIGURES shifting circuitry.

Baudot to ASCII Conversion Table

BAUDOT (ITA2) INPUT	CONVERTS TO	ASCII (ITA5) OUTPUT	BAUDOT (ITA2) INPUT	CONVERTS TO	ASCII (ITA5) OUTPUT
A through Z		A through Z (Upper Case)	$ (Figures D)		$
			! (Figures F)		!
BLANK		NUL	& (Figures G)		&
LETTERS		OPTION K1 SI	# (Figures H)		#
		OPTION K2 NO	' (Figures J)		'
		CHARACTER	((Figures K)		(
FIGURES		OPTION K1 SO	) (Figures L)		)
		OPTION K2 NO	. (Figures M)		.
		CHARACTER	, (Figures N)		,
SPACE		SPACE	BELL (Figures S)		BEL
CARRIAGE RETURN		CARRIAGE RETURN	; (Figures V)		;
LINE FEED		LINE FEED	/ (Figures X)		/
- (Figures A)		-	" (Figures Z)		"
? (Figures B)		?	ø through 9		Ø through 9
: (Figures C)		:			

ASCII CHARACTERS USED FOR CURSOR POSITIONING

CHAR	COL/ROW	CHAR	COL/ROW	CHAR	COL/ROW	CHAR	COL/ROW	CHAR	COL/ROW	CHAR	COL/ROW	CHAR	COL/ROW	CHAR	COL/ROW	CHAR	COL/ROW	CHAR	COL/ROW
SP	1	(	9	0	17	8	25	@	33	H	41	P	49	X	57	`	65	h	73
!	2	)	10	1	18	9	26	A	34	I	42	Q	50	Y	58	a	66	i	74
"	3	*	11	2	19	:	27	B	35	J	43	R	51	Z	59	b	67	j	75
#	4	+	12	3	20	;	28	C	36	K	44	S	52	[	60	c	68	k	76
$	5	,	13	4	21	<	29	D	37	L	45	T	53	\	61	d	69	l	77
%	6	—	14	5	22	=	30	E	38	M	46	U	54	]	62	e	70	m	78
&	7	.	15	6	23	>	31	F	39	N	47	V	55	^	63	f	71	n	79
'	8	/	16	7	24	?	32	G	40	O	48	W	56	—	64	g	72	o	80

D. DESCRIPTION OF CASSETTE OPERATION (Contd)

ITA 2 A.V. CODE
BAUDOT

BITS		5	0				1			
		4	0		1		0		1	
		3	0	1	0	1	0	1	0	1
2	1									
0	0		BLANK BLANK	SP SP	CR CR	, N	5 T	# H	9 O	. M
	1		3 E	BELL S	$ D	! F	" Z	6 Y	? B	/ X
1	0		L.F. L.F.	8 I	4 R	: C	) L	Ø P	É G	; V
	1		– A	7 U	' J	(K	2 W	1 Q	FIGS FIGS	LTRS LTRS

UPPER CHARACTER DESCRIBES UPPER CASE CODE
LOWER CHARACTER DESCRIBES LOWER CASE CODE

SP = SPACE
CR = CARRIAGE RETURN
LF = LINE FEED
FIGS = FIGURES SHIFT
LTRS = LETTERS SHIFT

USA STANDARD CODE FOR INFORMATION INTERCHANGE
USAS X3.4-1967

Bits b_7 b_6 b_5 →					0 0 0	0 0 1	0 1 0	0 1 1	1 0 0	1 0 1	1 1 0	1 1 1
b_4 ↓	b_3 ↓	b_2 ↓	b_1 ↓	Row ↓ / Column →	0	1	2	3	4	5	6	7
0	0	0	0	0	NUL	DLE	SP	0	@	P	`	p
0	0	0	1	1	SOH	DCI	!	1	A	Q	a	q
0	0	1	0	2	STX	DC2	"	2	B	R	b	r
0	0	1	1	3	ETX	DC3	#	3	C	S	c	s
0	1	0	0	4	EOT	DC4	$	4	D	T	d	t
0	1	0	1	5	ENQ	NAK	%	5	E	U	c	u
0	1	1	0	6	ACK	SYN	&	6	F	V	f	v
0	1	1	1	7	BEL	ETB	'	7	G	W	g	w
1	0	0	0	8	BS	CAN	(	8	H	X	h	x
1	0	0	1	9	HT	EM	)	9	I	Y	i	y
1	0	1	0	10	LF	SUB	*	:	J	Z	j	z
1	0	1	1	11	VT	ESC	+	;	K	[	k	{
1	1	0	0	12	FF	FS	,	<	L	\	l	|
1	1	0	1	13	CR	GS	—	=	M	]	m	}
1	1	1	0	14	SO	RS	.	>	N	^	n	~
1	1	1	1	15	SI	US	/	?	O	_	o	DEL

D. DESCRIPTION OF CASSETTE OPERATION (Contd)

LINE ENDING FUNCTIONS

LINE ENDING FUNCTION		SENT ON LINE	RECV ON LINE	FUNCTIONS PERFORMED ON CRT	FUNCTIONS PERFORMED ON PRINTER	OPTION AD B6-3
KEY	SYMBOL					
RET	/-- \	CR	CR	RETURN CURSOR TO START OF NEXT LINE	RETURN	OFF
LINE FEED	| |/	LF	LF	RETURN CURSOR TO START OF NEXT LINE	NEW LINE	
NEW LINE	---- ---- ----	CR CR LF	CR CR LF	RETURN CURSOR TO START OF NEXT LINE	NEW LINE	
RET	/--- \	CR	CR	CURSOR IS INCREMENTED ONE POSITION	RETURN	ON
LINE FEED	| |/	LF	--	RETURN CURSOR TO START OF NEXT LINE	NEW LINE	
NEW LINE	---- ---- ----	LF	LF	RETURN CURSOR TO START OF NEXT LINE	NEW LINE	

DIB_TABLE

SEND/RECEIVE_MODE

DTR CONDITION	OPTION	
	AI - 1 B6 -8	AI - 2 B5-7
DTR ON AT ALL TIMES	OFF	OFF
DTR ON IF RECEIVE BUFFER READY	OFF	ON
DTR ON IF RECEIVE BUFFER READY AND ALL RECEIVERS ASSIGNED TO LINE ARE CAPABLE OF RECEIVING	ON	ON
DTR ON IF RECEIVE BUFFER READY AND ANY RECEIVER ASSIGNED TO LINE IS CAPABLE OF RECEIVING	ON	OFF

POLL/SELECT MODE

DTR CONDITION	OPTION	
	AI - 1 B6-8	AI - 2 B5-7
DTR ON AT ALL TIMES	OFF	OFF
DTR ON IF RECEIVE BUFFER READY	OFF	ON

PART 3 -- OPERATIONAL CHECKOUT

INDEX

		PAGE
A.	GENERAL	
	1. PRELIMINARY CHECKS	3-1
	2. TESTING C400 STATION	3-2
B.	40C400 SELF-TEST PROCEDURES	3-3
C.	OFF-LINE CHECKOUT PROCEDURES	
	1. TERMINALS	3-9
	2. PRINTER CHECKOUT	3-32
D.	MONITOR TAPE CASSETTE CHECKOUT	
	1. METHOD 1	3-33
	2. METHOD 2	3-33
	3. CHECKOUT PROCEDURE	3-33
E.	ON-LINE CHECKOUT	
	1. METHOD 1	3-38
	2. METHOD 2	3-38
	3. MANUAL MODE CHECKOUT	3-39
	4. POLL/SELECT MODE CHECKOUT	3-41

A. GENERAL

NOTE: When ordering replaceable parts or components, unless otherwise specified, prefix each part number with the letters "TP" (ie, TP410055).

An operational checkout should be performed upon installation or on trouble calls.

If the indicated response is not obtained in any step of a checkout procedure, repeat the step to make sure that the procedure has been performed correctly. If the results are still unsatisfactory, perform the indicated trouble analysis.

Always perform the checkout in the order given in the chart.

The trouble analysis steps are based on satisfactory results of all previous steps.

1. PRELIMINARY CHECKS

Before turning on any equipment, check the following:

a. Are all circuit cards and cable connectors fully seated?
b. Are all fuses in place?
c. Are all cabinet lids and pedestal doors closed?
d. Do all printers have paper and ribbon properly installed?
e. Is the station connected to a properly grounded ac service?
f. Have the station options been installed and are they properly recorded?

A. GENERAL (Cont)

1. PRELIMINARY CHECKS (Cont)

g. Prior to applying ac power to the controller, insure that power is on to the tape cassette drives and the cassette is in the unlatched (cassettes disengaged) position.

h. Insure that all tape cassettes are properly formatted, each tape cassette must be placed in the receive tape cassette drive and the erase function performed. The erase function must be performed prior to the off-line checkout of the cassette drive. Refer to How to Operate Manual 559 for procedure to erase cassettes.

2. TESTING C400 STATION

1. The first test to be performed is the self-test of the C400 logic cards.
2. The next test to perform is the off-line checkout.
3. Perform component operational check.
4. Perform the monitor tape cassette checkout (if applicable).
5. Perform the on-line checkout.

B. 40C400 SELF-TEST PROCEDURES

Refer to Page 3-4 thru 3-8, CONTROLLER ARRANGEMENT FORMS.

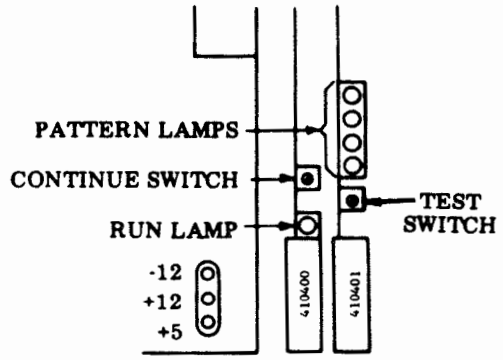

STEP	PROCEDURE	CORRECT RESPONSE	ANALYSIS
1	Apply power to controller.	All PSU voltage lamps lit. Run lamp lit.	40PSU103
2	Depress and hold test switch.	All pattern lamps light.	410401, 410400, 40PSU103
3	Release test switch.	Refer to Controller Arrangement Form. If continue pattern exists depress continue switch. After 1-2 minutes, pattern lights blink sequentially. Pattern lamps should extinguish (approximately 15 seconds).	Refer to Controller Arrangement Form, Page 3-4 or 3-8.
4	Check the monitor.	The display pattern corresponding to 410437 circuit card used. Sample displays follow.	410437 circuit card associated with monitor.
	*NORMAL $^{N}_{U}$ $^{S}_{H}$ $^{S}_{X}$ $^{E}_{X}$ $^{E}_{T}$ $^{E}_{Q}$ $^{A}_{K}$ $^{B}_{L}$ $^{B}_{S}$ ▶ ≡ $^{V}_{T}$ $^{F}_{F}$ ← $^{S}_{O}$ $^{S}_{I}$ $^{D}_{L}$ $^{D}_{1}$ $^{D}_{2}$ $^{D}_{3}$ $^{D}_{4}$ $^{N}_{K}$ ↓ $^{E}_{B}$ $^{C}_{N}$ $^{E}_{M}$ $^{S}_{B}$ $^{E}_{C}$ $^{F}_{S}$ $^{G}_{S}$ $^{R}_{S}$ $^{U}_{S}$ UNDERLINED ! " ~ $ % & ' ( ) * + , - . / 0 1 2 3 4 5 6 7 8 9 : ; < = > ? HALF @ A B C D E F G H I J K L M N O P Q R S T U V W X Y Z [\ ] ^ _ INTENSIFIED ` a b c d e f g h i j k l m n o p q r s t u v w x y z { ¦ } ~ ▨ Display Pattern for a 410437 D I/O Circuit Card		
5	To return 40C400 to normal operating mode, push continue switch.	Keyboard is unlocked. Cursor in home position on monitor.	

B. 40C400 SELF-TEST PROCEDURES (Contd)

Controller Arrangement Form for 40C437/AEL/107

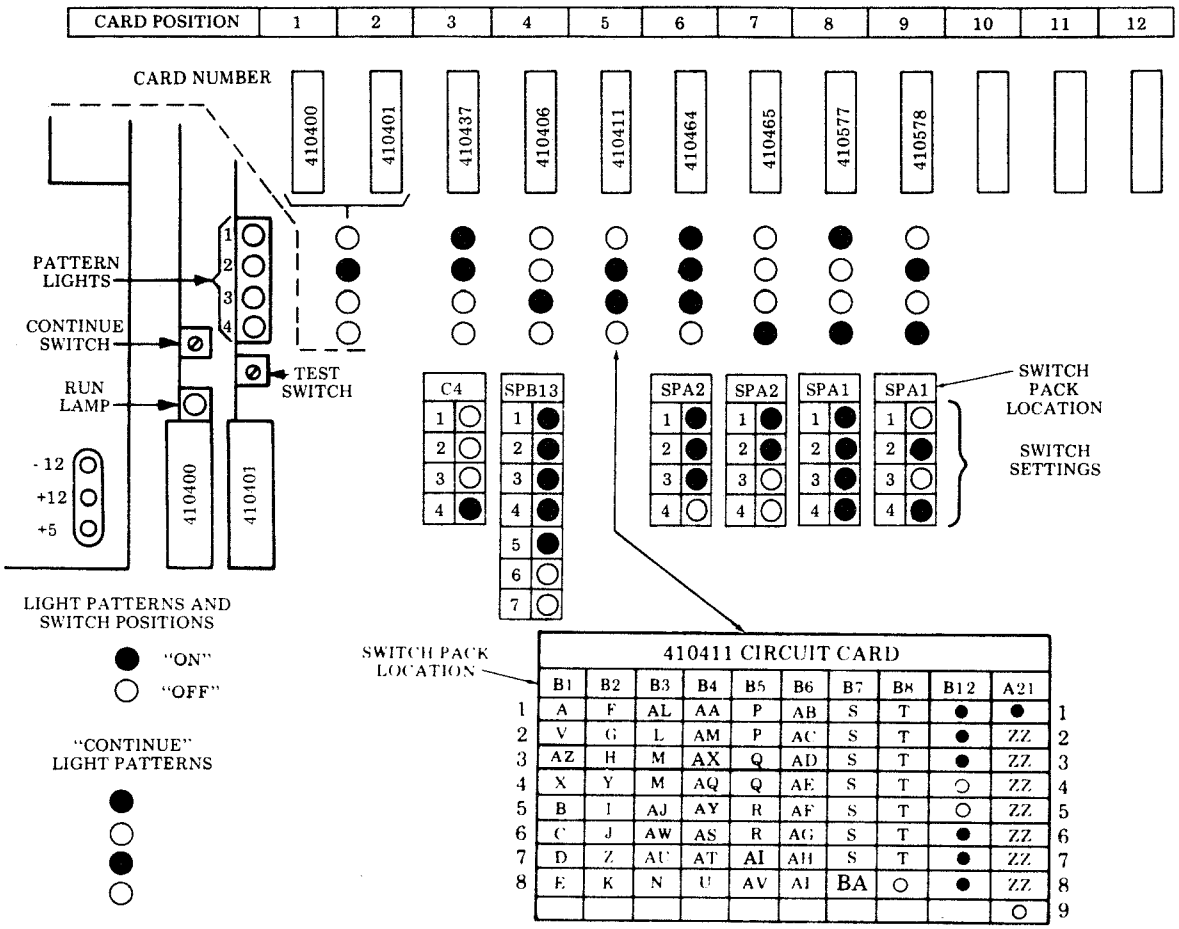

OPTIONS:

A. Line monitored by printer on send data
B. ETX on premature end of message
C. Colon lower case, semicolon upper case
D. Keyboard on-line transmits blind
E. Display received escape sequences
F. Printer on-line required to send
G. Send extended characters from keyboard
H. Monitor tape on required to send
I. Automatic paging of printer (54 line/page)
J. Printer optioned for double line feed
K. Keep letters-figures shift characters (S_I, S_O)
L. Printer select also selects receive tape
M. Terminal on-line parity
N. Mode display stays in at end of receive message
P. Controller port for send tape
Q. Controller port for receive tape
R. Controller port for monitor tape
S. 1st station identity character
T. 2nd station identity character
U. Mode display goes to after sending
V. Isochronous/Asychronous operation
X. Line wrap on display
Y. Reject received text Nulls
Z. Home on send

AA. Stop bits in five-level operation
AB. S/R or Poll/Select
AC. Received ETX characters retained
AD. Line terminator option
AE. One second line break
AF. Stop bits in eight-level
AG. Destructive scrolling
AH. Number of display segments
AI. DTR control
AJ. ETX required to send
AL. Preempt display
AM. 40/8A emulator option
AQ. Power-up mode
AS. Local send tape to display option
AT. Reject received text deletes
AU. Location of carriage return/new line keys
AV. Clear display when preempted
AW. ZNY transmission control.
AX. RTS/DTR control signal.
AY. Urgent Traffic and Priority Message monitor.
AZ. ZNY EEE transmission control.
BA. Low Tape Indication Value
ZZ. Eight-level asynchronous baud rate
ZZ. Five-level asynchronous baud rate

Controller Arrangement Form for 40C437/AEL/107 With Optional Answer-Back Feature*

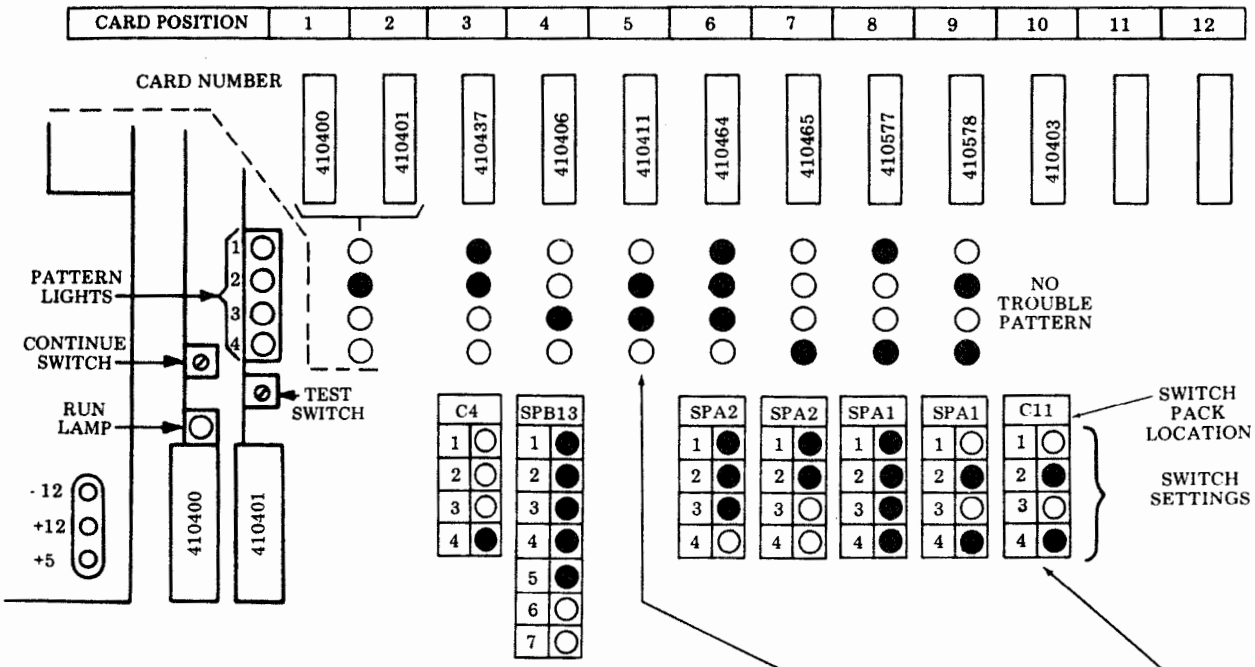

LIGHT PATTERNS AND SWITCH POSITIONS

● "ON"

○ "OFF"

"CONTINUE" LIGHT PATTERNS

SWITCH PACK LOCATION

410411 CIRCUIT CARD

	B1	B2	B3	B4	B5	B6	B7	B8	B12	A21	
1	A	F	AL	AA	P	AB	S	T	●	●	1
2	V	G	L	AM	P	AC	S	T	●	ZZ	2
3	AZ	H	M	AX	Q	AD	S	T	●	ZZ	3
4	X	Y	M	AQ	Q	AE	S	T	○	ZZ	4
5	B	I	AJ	AY	R	AF	S	T	○	ZZ	5
6	C	J	AW	AS	R	AG	S	T	●	ZZ	6
7	D	Z	AU	AT	AI	AH	S	T	●	ZZ	7
8	E	K	N	U	AV	AI	BA	○	●	ZZ	8
										○	9

410403 CIRCUIT CARD

	A17	A15	A13	B13	B15	B17	C17	C15	
1	a1	a2	a3	a4	a5	a6	a7	●	
2	b1	b2	b3	b4	b5	b6	b7	●	
3	c1	c2	c3	c4	c5	c6	c7	●	
4	d1	d2	d3	d4	d5	d6	d7	●	
5	e1	e2	e3	e4	e5	e6	e7	●	
6	f1	f2	f3	f4	f5	f6	f7	●	
7	g1	g2	g3	g4	g5	g6	g7	●	
8	h1	h2	h3	h4	h5	h6	h7	●	

**Note:* Controller may contain any combination of three optional 410403 circuit cards providing various features. These cards may be placed in any available slot in the controller, however, the features provided are not "enabled" unless option switch C11 is properly programmed as shown.

B. 40C400 SELF-TEST PROCEDURES (Contd)

Controller Arrangement Form for 40C437/AEL/107 With Optional Urgent Traffic Detection Feature*

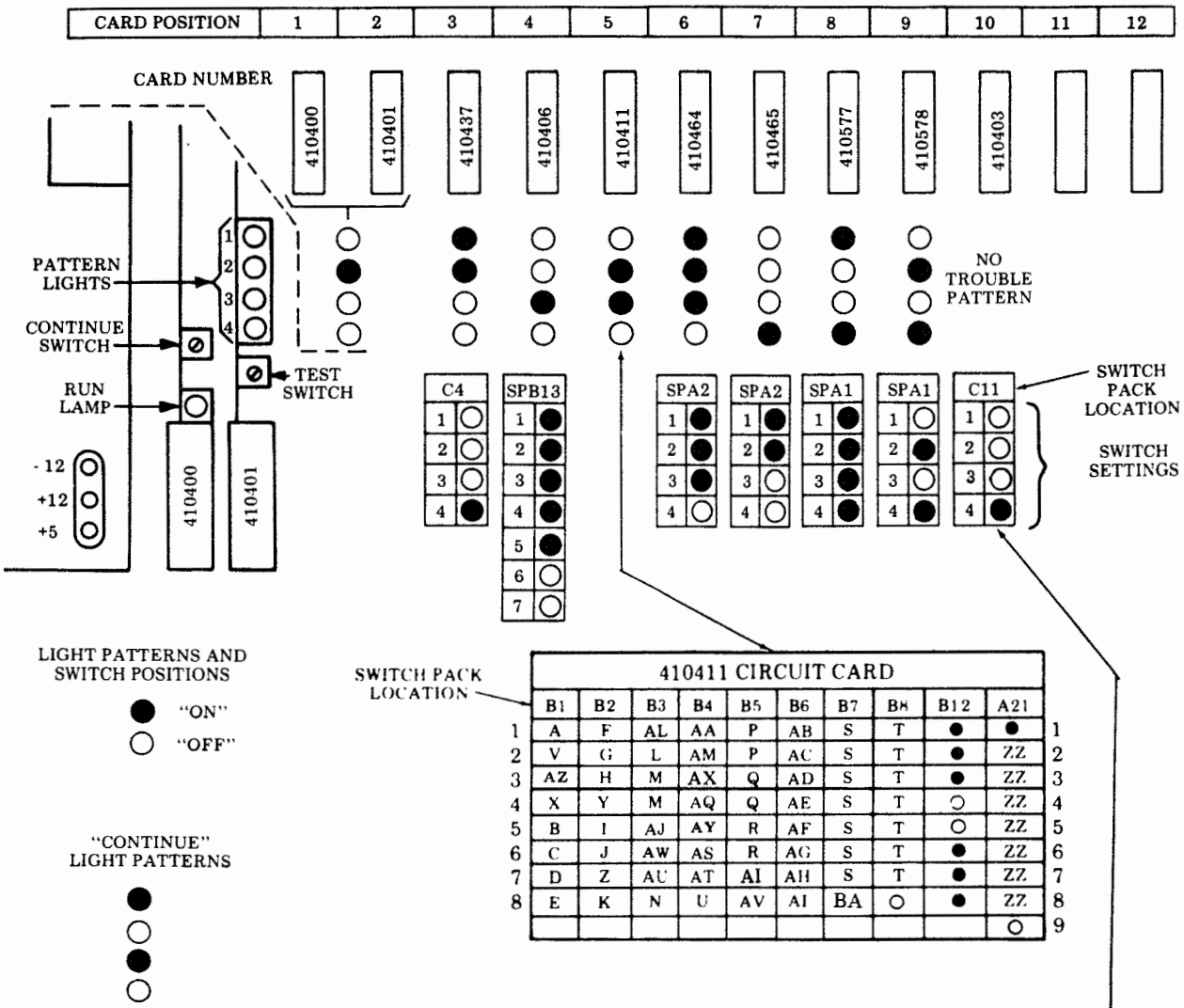

SWITCH PACK LOCATION

410411 CIRCUIT CARD

	B1	B2	B3	B4	B5	B6	B7	B8	B12	A21	
1	A	F	AL	AA	P	AB	S	T	●	●	1
2	V	G	L	AM	P	AC	S	T	●	ZZ	2
3	AZ	H	M	AX	Q	AD	S	T	●	ZZ	3
4	X	Y	M	AQ	Q	AE	S	T	○	ZZ	4
5	B	I	AJ	AY	R	AF	S	T	○	ZZ	5
6	C	J	AW	AS	R	AG	S	T	●	ZZ	6
7	D	Z	AU	AT	AI	AH	S	T	●	ZZ	7
8	E	K	N	U	AV	AI	BA	○	●	ZZ	8
										○	9

410403 CIRCUIT CARD

	A17	A15	A13	B13	B15	B17	C17	C15	
1	i1	i2	i3	i4	i5	i6	i7	●	
2	j1	j2	j3	j4	j5	j6	j7	●	
3	k1	k2	k3	k4	k5	k6	k7	●	
4	l1	l2	l3	l4	l5	l6	l7	●	
5	m1	m2	m3	m4	m5	m6	m7	●	
6	n1	n2	n3	n4	n5	n6	n7	●	
7	o1	o2	o3	o4	o5	o6	o7	●	
8	p1	p2	p3	p4	p5	p6	p7	●	

**Note:* Controller may contain any combination of three optional 410403 circuit cards providing various features. These cards may be placed in any available slot in the controller, however, the features provided are not "enabled" unless option switch C11 is properly programmed as shown.

Controller Arrangement Form for 40C437/AEL/107 With Optional ZNY Feature*

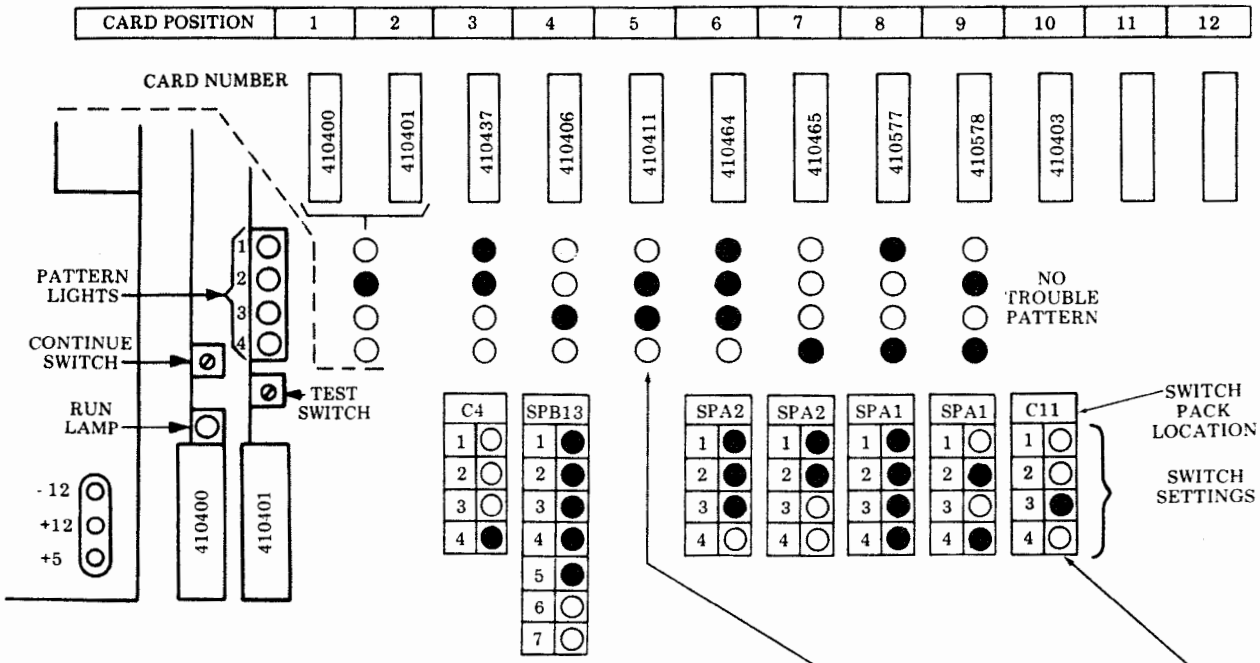

LIGHT PATTERNS AND SWITCH POSITIONS

● "ON"

○ "OFF"

"CONTINUE" LIGHT PATTERNS

●
○
●
○

SWITCH PACK LOCATION

410411 CIRCUIT CARD

	B1	B2	B3	B4	B5	B6	B7	B8	B12	A21	
1	A	F	AL	AA	P	AB	S	T	●	●	1
2	V	G	L	AM	P	AC	S	T	●	ZZ	2
3	AZ	H	M	AX	Q	AD	S	T	●	ZZ	3
4	X	Y	M	AQ	Q	AE	S	T	○	ZZ	4
5	B	I	AJ	AY	R	AF	S	T	○	ZZ	5
6	C	J	AW	AS	R	AG	S	T	●	ZZ	6
7	D	Z	AU	AT	AI	AH	S	T	●	ZZ	7
8	E	K	N	U	AV	AI	BA	○	●	ZZ	8
										○	9

410403 CIRCUIT CARD

	A17	A15	A13	B13	B15	B17	C17	C15	
1	r1	r2	r3	r4	r5	r6	r7	●	
2	s1	s2	s3	s4	s5	s6	s7	●	
3	t1	t2	t3	t4	t5	t6	t7	●	
4	u1	u2	u3	u4	u5	u6	u7	●	
5	w1	w2	w3	w4	w5	w6	w7	●	
6	x1	x2	x3	x4	x5	x6	x7	●	
7	y1	y2	y3	y4	y5	y6	y7	●	
8	z1	z2	z3	z4	z5	z6	z7	●	

**Note:* Controller may contain any combination of three optional 410403 circuit cards providing various features. These cards may be placed in any available slot in the controller, however, the features provided are not "enabled" unless option switch C11 is properly programmed as shown.

B. 40C400 SELF-TEST PROCEDURES (Contd)

Controller Arrangement Form for 40C437/AEL/107 With Additional 410406 Circuit Card*

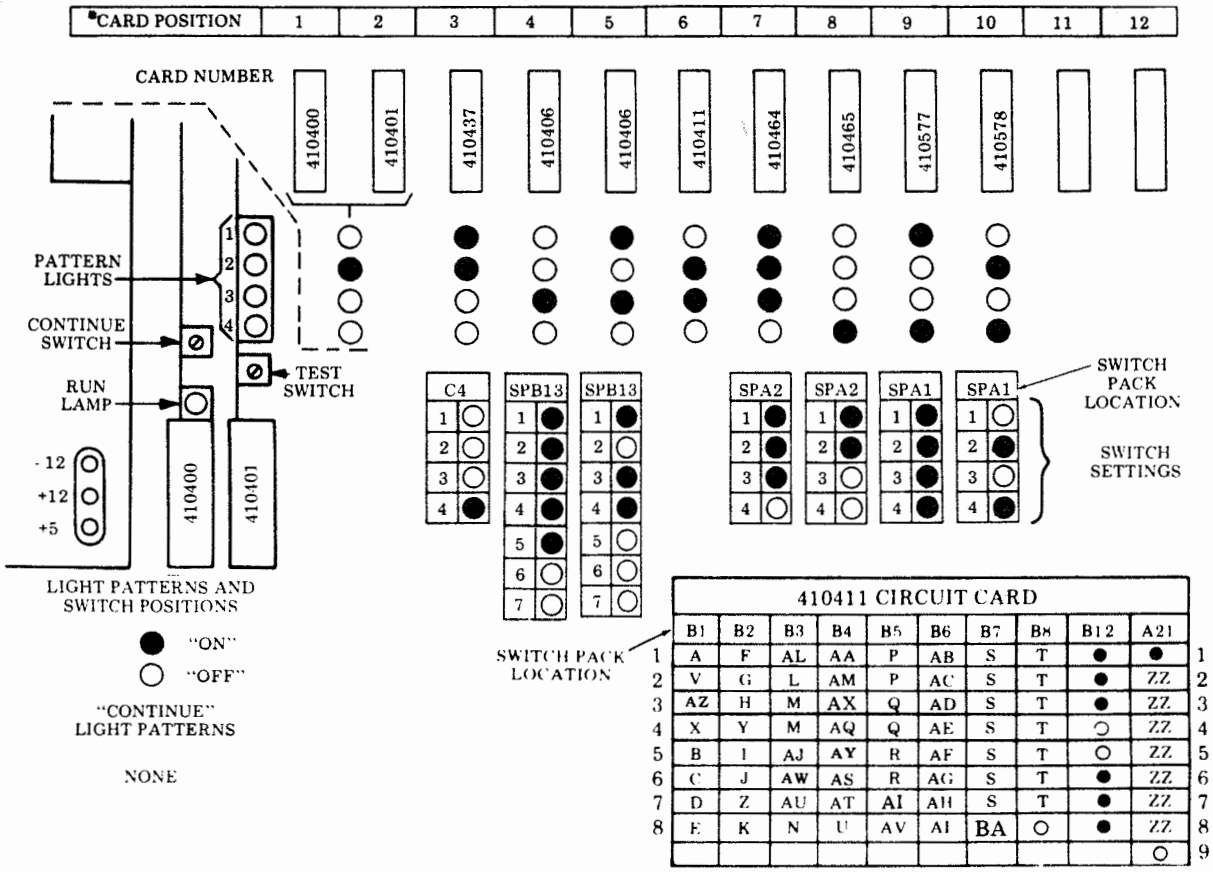

OPTIONS:

A. Line monitored by printer on send data
B. ETX on premature end of message
C. Colon lower case, semicolon upper case
D. Keyboard on-line transmits blind
E. Display received escape sequences
F. Printer on-line required to send
G. Send extended characters from keyboard
H. Monitor tape on required to send
I. Automatic paging of printer (54 line/page)
J. Printer optioned for double line feed
K. Keep letters-figures shift characters (S_I, S_O)
L. Printer select also selects receive tape
M. Terminal on-line parity
N. Mode display stays in at end of receive message
P. Controller port for send tape
Q. Controller port for receive tape
R. Controller port for monitor tape
S. 1st station identity character
T. 2nd station identity character
U. Mode display goes to after sending
V. Isochronous/Asychronous operation
X. Line wrap on display
Y. Reject received text Nulls
Z. Home on send

AA. Stop bits in five-level operation
AB. S/R or Poll/Select
AC. Received ETX characters retained
AD. Line terminator option
AE. One second line break
AF. Stop bits in eight-level
AG. Destructive scrolling
AH. Number of display segments
AI. DTR control
AJ. ETX required to send
AL. Preempt display
AM. 40/8A emulator option
AQ. Power-up mode
AS. Local send tape to display option
AT. Reject received text deletes
AU. Location of carriage return/new line keys
AV. Clear display when preempted
AW. ZNY transmission control.
AX. RTS/DTR control signal.
AY. Urgent Traffic and Priority Message monitor.
AZ. ZNY EEE transmission control.
BA. Low Tape Indication Value
ZZ. Eight-level asynchronous baud rate
ZZ. Five-level asynchronous baud rate

*With an additional 410406 card added, terminal can only accomodate two optional 410403 cards instead of three.

C. OFF-LINE CHECKOUT PROCEDURES

1. TERMINALS

Keytop Layout

The location of the various control and data keys referred to in the checkout procedures can be found in the following illustration.

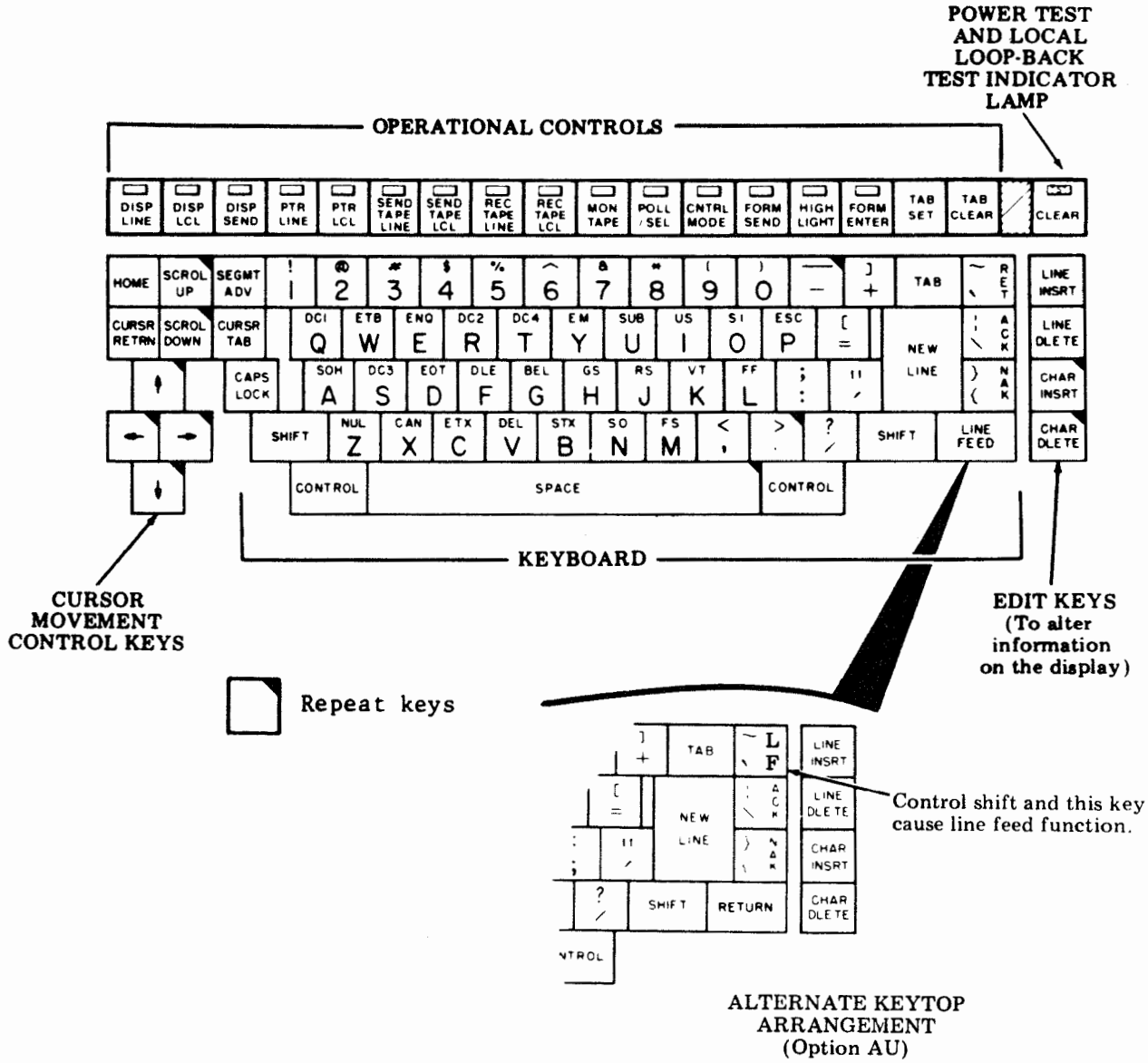

ALTERNATE KEYTOP ARRANGEMENT (Option AU)

Preliminary Instructions

Follow these preliminary instructions before testing of the opcon is started using a Model 40 Set. The operational checks are to be performed in the order presented.

(1) Cassettes are in unlatched position; turn power on to cassette drive (if present).
(2) Turn on power to the set or station.
(3) Turn on power to the display and adjust brightness.
(4) Perform Erase function on each of the cassettes, if not previously preformatted. Refer to How to Operate Manual 559 for procedure.

C. OFF-LINE CHECKOUT PROCEDURES (Contd)

1. TERMINALS (Contd)

Note: If Option AB-2 (Poll/Select) has been selected, immediately when power is turned on, the poll/sel and mon tape (if monitor tape is present) lamps will light. PTR line lamp may light after approximately 14 seconds. If Option AB-1 (S/R) has been selected, no lamps on keyboard will light.

STEP	PROCEDURE	RESULTS	TROUBLE ANALYSIS
	Note: If Option AU-1 has been selected and the wide RETURN key has been substituted for the wide LINE FEED key, it should be used instead of the LINE FEED key. In either case the term "LINE FEED" (or RETURN) key means the wide key to the right and below the NEW LINE key. Refer to Page 3-9 for location.		
1	Depress LINE FEED or (RETURN) and [" ,] simultaneously with additional force and then release.	TST lamp lights (brightly) and remains lit indicating loopback test mode is activated and power is being supplied to opcon.	
a.	Place opcon into the caps mode by depressing and latching CAPS LOCK. If the CAPS LOCK key has been replaced with a blocking keytop, the CAPS keyswitch should be locked in caps position if upper case characters cannot be entered from the keyboard, remove blocking keytop and insure CAPS keyswitch is in the down locked position.	*Note:* Occasionally the operational lamps may flash on and then off, when loopback test mode is activated. If this occurs, clear the test by depressing LINE FEED (or RETURN) and ESC P beyond their normal stop, and re-enter test mode.	
b.	Depress the following keys while observing lamps for proper indication.		

Depress Keys	Function	Lamp Condition
A	DISP LINE	ON
CONTROL and A (SOH)	DISP LINE	OFF
C	DISP LCL	ON
CONTROL and C (ETX)	DISP LCL	OFF
D	DISP SEND	ON
CONTROL and D (EOT)	DISP SEND	OFF
G	PTR LINE	ON
CONTROL and G (BEL)	PTR LINE	OFF
F	PTR LCL	ON
CONTROL and ACK	PTR LCL	OFF
E	SEND TAPE LINE	ON
CONTROL and E (ENQ)	SEND TAPE LINE	OFF
B	SEND TAPE LCL	ON
CONTROL and B (STX)	SEND TAPE LCL	OFF
J	REC TAPE LINE	ON
NEW LINE	REC TAPE LINE	OFF
O	REC TAPE LCL	ON
CONTROL and O (SI)	REC TAPE LCL	OFF
N	MON TAPE	ON
CONTROL and N (SO)	MON TAPE	OFF
M	POLL/SEL (or S/R)	ON
LINE FEED (or RETURN)	POLL/SEL (or S/R)	OFF

STEP	PROCEDURE	RESULTS		TROUBLE ANALYSIS
1b. (Cont)	L	CNTRL MODE	ON	
	CONTROL and L (FF)	CNTRL MODE	OFF	
	K	FORM SEND	ON	
	CONTROL and K (VT)	FORM SEND	OFF	
	I	HIGH LIGHT	ON	
	TAB	HIGH LIGHT	OFF	
	H	FORM ENTER	ON	
	← (Cursor Left)	FORM ENTER	OFF	
	→ (Cursor Right)	DISP LCL	≡FLASH≡	
	CONTROL and C (ETX)	DISP LCL	OFF	
	CURSR RETRN	PTR LINE	≡FLASH≡	
	CONTROL and G (BEL)	PTR LINE	OFF	
	↓ (Cursor Down)	SEND TAPE LCL	≡FLASH≡	
	CONTROL and B (STX)	SEND TAPE LCL	OFF	
	CLEAR	REC TAPE LINE	≡FLASH≡	
	NEW LINE	REC TAPE LINE	OFF	
	LINE DLETE	POLL/SEL (or S/R)	≡FLASH≡	
	LINE FEED (or RETURN)	POLL/SEL (or S/R)	OFF	
	LINE INSRT	CNTRL MODE	≡FLASH≡	
	CONTROL and L (FF)	CNTRL MODE	OFF	
	HOME	FORM ENTER	≡FLASH≡	
	← (Cursor Left)	FORM ENTER	OFF	
c.	Depress LINE FEED or (RETURN) and ESC P simultaneously with additional force, and then release.	TST CLEAR lamp extinguishes and returns opcon to normal operating mode.		

Home the cursor, (DISP LINE, DISP LCL, DISP SEND lamp out). Then depress each key on the keyboard portion of the opcon four or five times. Check monitor for character.

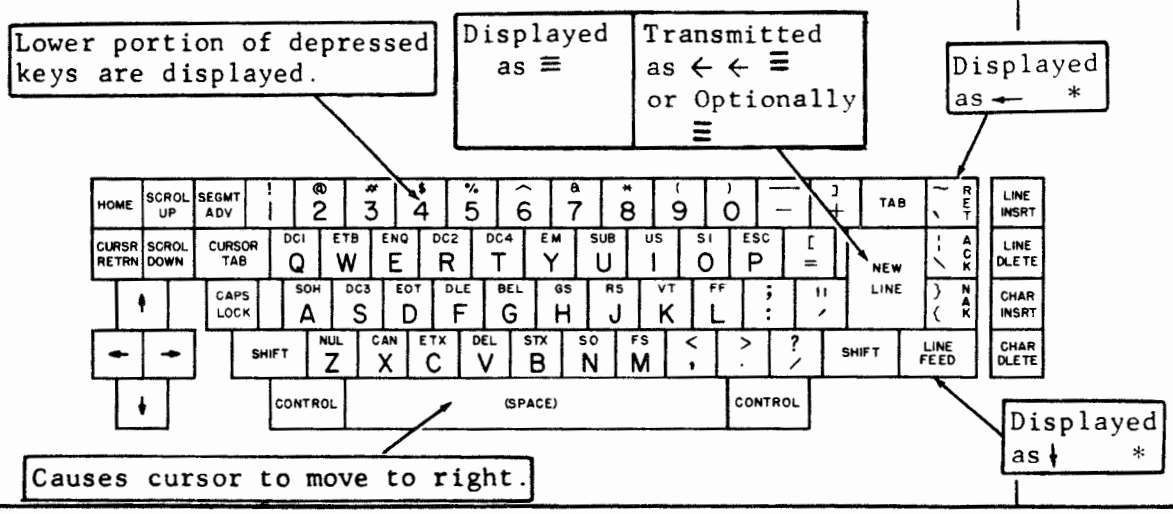

*If Option AU-1 has been selected, these functions are reversed.

C. OFF-LINE CHECKOUT PROCEDURES (Contd)

1. TERMINALS (Contd)

STEP	PROCEDURE	RESULTS	TROUBLE ANALYSIS
3	Disengage CAPS LOCK by depressing it again momentarily. Again depress each key on keyboard portion of opcon four or five times.	Alpha characters described in Step 2 are displayed in lower case (ie, abcdef, etc).	
4	Depress left SHIFT together with each nonalpha key (ie, !@#$, etc) on keyboard portion of opcon.	Upper portion of depressed keys are displayed. 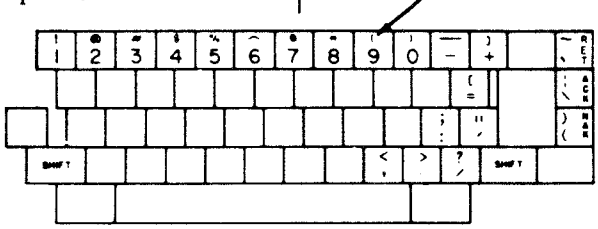	
5	Depress right SHIFT together with one of the keys depressed in Step 4.	The character on upper portion of depressed key is displayed.	
6	Depress left CONTROL together with keys containing control characters four or five times each.	The corresponding control character is displayed. 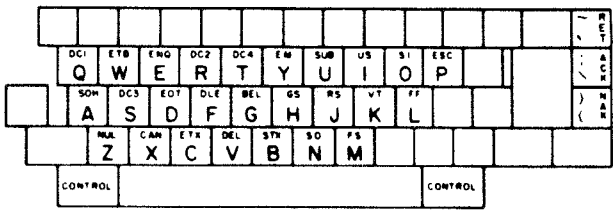	

STEP	PROCEDURE	RESULTS	TROUBLE ANALYSIS
7	Depress right CONTROL together with one of the keys depressed in Step 6.	The corresponding control character is displayed.	
8	Depress [-] , [>] and SPACE with additional force than is normally required.	---------- ..... The SPACE key repeatedly moves the cursor.	
9	Depress HOME. Then in sequence depress momentarily with more force than normally required, each cursor movement key shown. 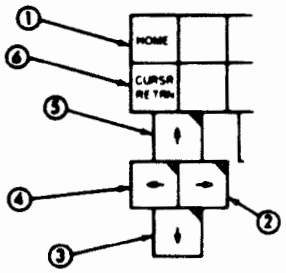	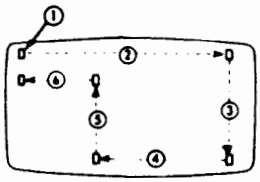	
10	Home the cursor and clear the display. Type alpha characters A through J on the display. Place the cursor over character E and depress CHAR INSRT momentarily; then depress it fully -- releasing it after characters stop moving.	ABCDEFGHIJ□ ABCD[E]FGHIJ ABCD□ EFGHIJ ABCD□ EFGHIJ	
11	Depress CHAR DLETE momentarily; then depress it fully.	ABCD□ EFGHIJ ABCD□ EFGHIJ ABCD[E]FGHIJ ABCD[F]GHIJ ABCD[G]HIJ	
12	Depress LINE INSRT once.	Cursor moves to beginning of line, and the line of data moves down one line.	

C. OFF-LINE CHECKOUT PROCEDURES (Contd)

1. TERMINALS (Contd)

STEP	PROCEDURE	RESULTS	TROUBLE ANALYSIS
13	Depress LINE DLETE once, then depress CLEAR.	The line of data moves up, and then display is cleared of all characters.	
14	Place the cursor away from home position and depress CURSOR TAB.	Cursor moves to first character position of next line (unformatted display).	
15	Place the cursor away from home position and depress TAB.	▶is displayed at cursor location. Cursor moves to first character position of next line (unformatted display).	
16	Depress HOME and CLEAR. Press numeric 1.	Numeric 1 is displayed in home position.	
17	Depress SEGMT ADV, type a numeric 2. Depress SEGMT ADV again, type a numeric 3. If Option AH-1 (6 segment display) has been optioned go to 18. If Option AH-2 (3 segment display) has been optioned go to 19.	The numeric 1 disappears from display and the 2 appears when entered from the keyboard. The 2 disappears from display and the 3 appears when entered from the keyboard.	
18	Depress SEGMT ADV again, type a numeric 4. Depress SEGMT ADV again, type a numeric 5. Depress SEGMT ADV again, type a numeric 6.	The 3 disappears from the display and the 4 appears when entered from the keyboard. The 4 disappears from the display and the 5 appears when entered from the keyboard. The 5 disappears from the display and the 6 appears when entered from the keyboard.	
19	Depress HOME.	The cursor moves to the home position with a 1 displayed under the cursor.	
20	Depress SEGMT ADV.	The cursor does not move. The 1 disappears from the display and a 2 appears in the character position next to the cursor on the right.	

STEP	PROCEDURE	RESULTS	TROUBLE ANALYSIS
21	Depress SEGMT ADV again.	The 2 disappears from the display and a 3 appears on the display to the right of the cursor.	
22	Depress SEGMT ADV again.	If Option AH-2 (3 segment display) has been optioned, the 3 will disappear from the display and the 1 will appear under the cursor. Go to 24. If Option AH-1 (6 segment display) has been optioned, the 3 will disappear from the display and a 4 will appear to the right of the cursor. Go to 23.	
23	Depress SEGMT ADV three more times.	On the first depression the 4 will disappear and a 5 will appear. On the second depression the 5 will disappear and a 6 will appear. On the third depression the 6 will disappear and the display will wrap back to the first segment and a 1 will be displayed under the cursor.	
24	Depress SCROL UP once.	The 1 disappears from the display and the 2 appears at bottom left of display.	
25	Depress SCROL UP fully.	The 2, then the 3 move up the display. Scrolling stops when the 3 reaches top of display, if Option AH-2 is optioned. If Option AH-1 is optioned, 4 then 5 then 6 will move up the display and scrolling will stop when the 6 reaches the top of the display.	
26	Depress SCROL DOWN once, then fully.	The 3 or 6 moves down one line, then moves down continuously and disappears as the 2 or 5 appears at top of display. Scrolling continues until the 1 appears at top of display.	

C. OFF-LINE CHECKOUT PROCEDURES (Contd)

1. TERMINALS (Contd)

STEP	PROCEDURE	RESULTS	TROUBLE ANALYSIS
27	Depress SEGMT ADV until the last segment 3 or 6 is displayed.	First the 2 then the 3 appear at top of display.	
28	Position cursor by means of the [↓] and [←] to next to the last line of display. Type some Us on this line.	Cursor moves under direction of cursor control key. Us are displayed.	
29	Depress LINE INSRT once.	The Us move to last line of display. The cursor moves to the 1st character position of the line next to last line of display.	
30	Depress LINE INSRT several times.	Display does not change.	
31	Home cursor and depress TAB CLEAR, and CLEAR	All tabs (on all segments) are cleared. Any data present is cleared from display.	
32	Depress HIGH LIGHT.	HIGH LIGHT lamp lights.	
33	Enter a full line of *s at top of display.	*s are displayed as intensified. Alarm sounds at 73rd and 80th character positions. Cursor remains at right end of line. NOTE: If option X-1 is installed, the cursor will wrap to the beginning of the next line.	
34	Depress HIGH LIGHT again.	HIGH LIGHT lamp extinguishes.	
35	Depress LINE INSRT.	Cursor moves to left margin, and highlighted *s move down one line.	
36	Depress FORM ENTER.	FORM ENTER lamp lights.	

STEP	PROCEDURE	RESULTS	TROUBLE ANALYSIS
37	Enter a full line of Us at top of display.	Us are displayed at half-intensity (protected). Alarm sounds at 80th character position. Cursor remains at right end of line. See Note in Step 33.	
38	Depress LINE INSRT.	Cursor moves to left margin and lines of *s and Us both move down one position. Cursor remains in home position.	
39	Depress CLEAR.	Screen is cleared.	
40	Depress FORM ENTER.	FORM ENTER lamp extinguishes, alarm sounds.	
41	Enter message in lines 1 through 9 of display. (Procedure is indicated on Page 3-18.)	Message appears as shown on Page 3-18 (To observe protected spaces, increase monitor brightness and note that all protected data has darker background than unprotected data.)	
42	Depress CHAR INSRT fully and hold until movement stops.	Word QUICK in line 1 moves to tab column and stops. No other characters affected.	
43	Depress CHAR DLETE twice.	Word QUICK in line 1 moves two spaces to the left and stops. No other characters affected.	
44	Depress TAB.	Cursor moves to tab column. Tab symbol (▶) appears at original position of cursor. Word QUICK passed over by cursor is erased from display.	

C. OFF-LINE CHECKOUT PROCEDURES (Contd)

1. TERMINALS (Contd)

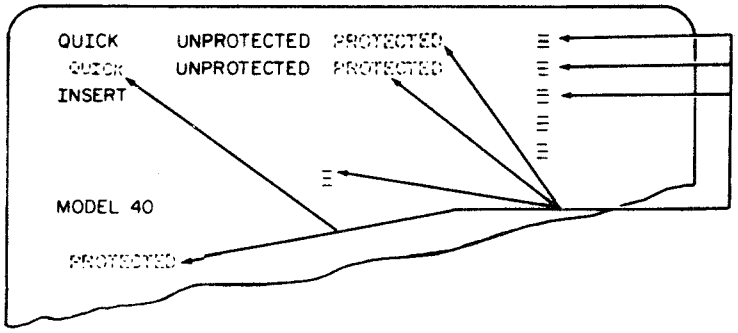

Protected data displayed at half-intensity.

NOTE: Depress each key once unless number of depressions is indicated in parentheses.

LINE 1

Type QUICK
Depress SPACE (5)
Depress TAB SET
Type UNPROTECTED
Depress SPACE (2)
Depress FORM ENTER on
Type PROTECTED
Depress FORM ENTER off
Depress SPACE (8)
Depress FORM ENTER on
Depress NEW LINE

LINE 2

Type QUICK
Depress FORM ENTER off
Depress SPACE (3)
Type UNPROTECTED
Depress SPACE (2)
Depress FORM ENTER on
Type PROTECTED
Depress FORM ENTER off
Depress SPACE (8)
Depress FORM ENTER on
Depress NEW LINE
Depress FORM ENTER off

LINE 3

Type INSERT
Depress SPACE until cursor is one character to the left of new line symbol in line 2.
Depress FORM ENTER on
Depress NEW LINE
Depress FORM ENTER off

LINES 4 AND 5

Depress Cursor Right (→) until cursor is one character to the left of the new line symbol.
Depress FORM ENTER on
Depress NEW LINE
Depress FORM ENTER off

(Repeat for line 5)

LINE 6

Depress Cursor Right (→) until cursor is at about 23rd character position.
Depress FORM ENTER on
Depress NEW LINE
Depress FORM ENTER off

LINE 7

Type MODEL
Depress SPACE
Type 40

LINE 8

Depress CURSR RETRN
Depress Cursor Down (↓) twice.

LINE 9

Depress FORM ENTER on
Type PROTECTED
Depress FORM ENTER off
Depress HOME

STEP	PROCEDURE	RESULTS	TROUBLE ANALYSIS
45	Depress CHAR INSRT fully and hold until movement stops.	Word UNPROTECTED moves two positions to right, stopping when it reaches word PROTECTED. No other characters affected.	
46	Depress CHAR DLETE fully and hold until movement stops.	Word UNPROTECTED is moved left and completely erased. No other characters affected.	
47	Depress TAB.	Cursor moves to second character position after word PROTECTED. Tab symbol (▶) appears at original position of cursor.	
48	Depress Space once, then depress it fully.	Cursor moves to character position preceding protected new line symbol. Alarm sounds continuously, and cursor does not advance beyond this position.	
49	Depress TAB.	Cursor moves to second space after protected word QUICK in line 2. Tab symbol (▶) appears at original position of cursor.	
50	Depress CURSR TAB three times.	Cursor moves to tab mark on first depression. Cursor moves to the second space following word PROTECTED on second depression. Cursor moves to beginning of word INSERT in line 3 on third depression. No characters altered in any way.	
51	Depress LINE INSRT three times.	Word INSERT moves down two lines and stops. Rest of display does not change.	

C. OFF-LINE CHECKOUT PROCEDURES (Contd)

1. TERMINALS (Contd)

STEP	PROCEDURE	RESULTS	TROUBLE ANALYSIS
52	Position cursor over M in word MODEL, then depress LINE INSRT twice.	Words MODEL 40 move down one position and stop.	
53	Move cursor over P at beginning of line 9, and type some miscellaneous characters.	Alarm sounds each time a key is depressed. (No characters can overwrite a protected character. Cursor moves one character space with each key depression.)	
54	Depress HOME, CLEAR, then TAB CLEAR.	Cursor goes to home position. All unprotected characters and tab columns are cleared. Protected characters remain on display.	
55	Depress FORM ENTER.	FORM ENTER lamp lights.	
56	Depress CLEAR.	All characters are cleared from display.	
57	Depress FORM ENTER.	FORM ENTER lamp extinguishes.	
58	Depress CNTRL MODE keytop.	CNTRL MODE lamp lights and the following message appears on the display.	

CURSOR POSITION

```
        - - CONTROL MODE - -
 1.  ▮      Five Level Communication Interface
 2.  _      Single Message Mode
 3.P 000    Send Tape Block Number
 4.  000    Receive Tape Block Number
 5.  ???    Monitor Tape Block Number
 6.  _      List Send Tape Headings
 7.  _      List Receive Tape Headings
 8.  _      Monitor Data On Display
 9.  ___    Erase Receive Tape
10.  _      Keyboard On Line
11.  –      Tape Ports ST = 1  RT = 2  MT = 3
12.  –      Programmed character sequence verification
```

INDICATES POSITION OF SEND AND RECEIVE TAPES

INDICATES MONITOR TAPE IS NOT PRESENT

Number indicates cassette drive assigned for that function.

ST = Send Tape
RT = Receive Tape
MT = Monitor Tape

0 will appear if no cassette drive is available for that function.

STEP	PROCEDURE	RESULTS	TROUBLE ANALYSIS
58 (Cont)	NOTE: If a cassette drive is not present ??? will appear in the block number for that cassette. For KD sets, Place in Service. For KDPM2 and KDPM3 sets, go to Step 68. For KDP sets go to Step 59.		
	KDP LOCAL CHECKOUT		
59	Using CURSOR positioning keys ↓ → ① position cursor to the first underline to the right of 2. ②Type an upper case X. ③Depress LINE FEED key. Refer to Page 3-9 for location of LINE FEED key when Option AU is selected.	Cursor moves under direction of cursor control keys. X appears, cursor moves right one character position. X remains, cursor returns to its original position.	

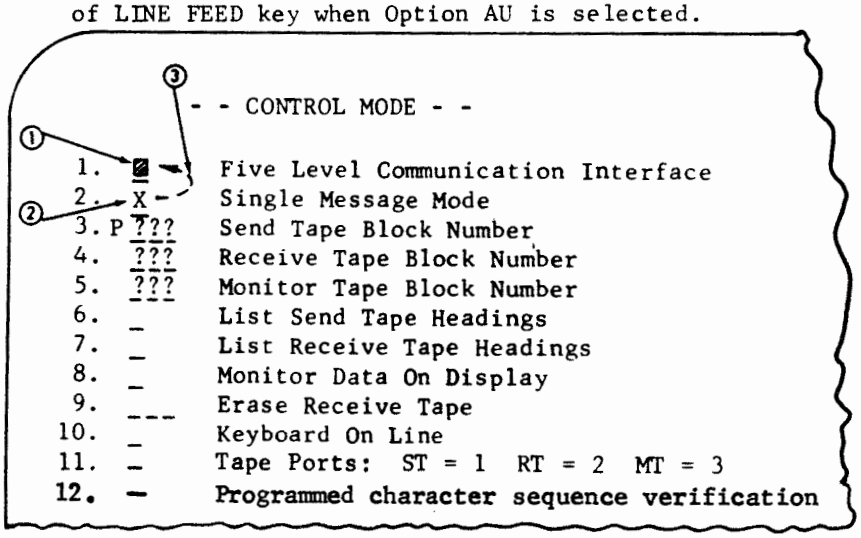

C. OFF-LINE CHECKOUT PROCEDURES (Contd)

1. TERMINALS (Contd)

STEP	PROCEDURE	RESULTS	TROUBLE ANALYSIS
60	Depress CNTRL MODE key.	Message on display extinguishes, cursor goes to home position.	
61	Enter a line of Quick Brown Fox. End line with E_{TX}. Enter several new lines. Enter a line of Now is the time end with E_{TX}. Home cursor. Depress PTR LCL. Depress DISP SEND. Depress DISP LCL.	Message appears on display as typed. Cursor goes home. PTR LCL lamp lights. DISP SEND lamp lights. DISP LCL lamp lights. Cursor moves across message and stops at character position after first E_{TX}. Printer motor starts and printer copies Quick Brown Fox message. When cursor reaches first E_{TX} DISP LCL and DISP SEND lamps extinguish.	
62	Depress DISP SEND and DISP LCL again. NOTE: If Option Z-1 is installed, the cursor will go to the home position and the first message will be sent again.	Cursor moves from present location to next E_{TX}. Printer copies message.	
63	Depress PTR LCL. Home cursor, depress CLEAR key to clear display. Go to 2. PRINTER CHECKOUT, Page 3-32.	PTR LCL lamp extinguishes.	
64	Depress CNTRL MODE key.	Control Message appears on display.	

STEP	PROCEDURE	RESULTS	TROUBLE ANALYSIS
	LOCAL CHECKOUT KDPM[2]		
65	Using cursor positioning key ↓ → ① position cursor to the first underline to the right of 2.	Cursor moves under direction of cursor control key.	
	② Type an upper case X.	X appears, cursor moves one space to the right.	
	③ Depress LINE FEED key.	X remains, cursor returns to its original position.	
66	Depress CNTRL MODE key.	Message on screen extinguishes, cursor goes to home position.	

```
      ③  - - CONTROL MODE - -
  ①
   1.   ■   Five Level Communication Interface
   2.   X   Single Message Mode
  ②3. P 000 Send Tape Block Number
   4.   000 Receive Tape Block Number
   5.   ??? Monitor Tape Block Number
   6.   _   List Send Tape Headings
   7.   _   List Receive Tape Headings
   8.   _   Monitor Data On Display
   9.   ___ Erase Receive Tape
  10.   _   Keyboard On Line
  11.   _   Tape Port:  ST = 1  RT = 2  MT = 0
  12.  --   Programmed Character Sequence Verification
```

NOTE: Line 5 will contain the current block number for the monitor tape cassette.

C. OFF-LINE CHECKOUT PROCEDURES (Contd)

1. TERMINALS (Contd)

STEP	PROCEDURE	RESULTS	TROUBLE ANALYSIS
67	Enter a line of "Quick Brown Fox". End line with E_{TX}. Enter several new lines. Enter a line of "Now is the time" end with E_{TX}.	Message appears on display as typed.	
	Depress HOME.	Cursor goes home.	
	Depress PTR LCL.	PTR LCL lamp lights.	
	Depress REC TAPE LCL.	REC TAPE lamp lights.	
	Depress DISP SEND.	DISP SEND lamp lights.	
	Depress DISP LCL.	DISP LCL lamp lights.	
		Cursor moves across message and stops at character position after first E_{TX}. Printer motor starts and copies message. REC TAPE positions cassette to next available recording block and records message.	
		When cursor reaches the first E_{TX}, DISP LCL and DISP SEND will extinguish.	
68	Depress DISP SEND and DISP LCL again.	Cursor moves from present position to next E_{TX}. Printer and REC TAPE copy message as in Step 67 above.	
69	Depress PTR LCL.	PTR LCL lamp extinguishes.	
	Depress REC TAPE LCL.	REC TAPE LCL lamp extinguishes.	
70	Depress CNTRL MODE key.	Prepared message extinguishes, and control mode message appears.	

STEP	PROCEDURE	RESULTS	TROUBLE ANALYSIS
71	① Using cursor positioning key, position cursor over X placed in line 2. ② Depress SPACE BAR key. ③ Depress LINE FEED key. NOTE: Rec Tape Block number has changed from 000 to 003 indicating the Rec Tape has recorded two messages. ③ - - CONTROL MODE - - 1. Z Five Level Communication Interface 2 X Single Message Mode 3. P 000 Send Tape Block Number 4. 003 Receive Tape Block Number 5. ??? Monitor Tape Block Number 6. _ List Send Tape Headings 7. _ List Receive Tape Headings 8. _ Monitor Data On Display 9. ___ Erase Receive Tape 10. _ Keyboard On Line	Cursor moves under direction of cursor control keys. X is deleted. Cursor returns to its original position.	
72	Depress CNTRL MODE key. Depress HOME.	Control Mode message extinguishes, and original typed message appears. Cursor goes to home position.	
73	Depress PTR LCL. Depress REC TAPE LCL. Depress DISP SEND. Depress DISP LCL. Depress DISP SEND and DISP LCL again. See Note in Step 62.	PTR LCL lamp lights. REC TAPE LCL lamp lights. DISP SEND lamp lights. DISP LCL lamp lights. Cursor moves through messages until first E_{TX} is reached. Printer and REC TAPE copy message. DISP LCL and DISP SEND lamps extinguish when the first E_{TX} is reached. Cursor moves to next E_{TX}, DISP LCL and DISP SEND lamps extinguish.	

C. OFF-LINE CHECKOUT PROCEDURES (Contd)

1. TERMINALS (Contd)

STEP	PROCEDURE	RESULTS	TROUBLE ANALYSIS
74	Depress PTR LCL. Depress REC TAPE LCL. Depress HOME and CLEAR.	PTR LCL lamp extinguishes. REC TAPE LCL lamp extinguishes. Cursor goes to HOME position, all characters are cleared from display.	
75	Depress CNTRL MODE key.	Control message appears on display.	
76	Using the cursor control keys, position the cursor over the underline next to 7. Type an upper case X. Depress LINE FEED key.	Cursor moves under control of cursor control keys. X appears on display. The control mode message extinguishes the REC TAPE rewinds and the following appears on the display.	
	INDICATES BLOCK NUMBER 001 THE QUICK BROWN FOX JUMPED 002 ←←Ξ←←Ξ←←Ξ NOW IS THE TIME 003 THE QUICK BROWN FOX JUMPED 004 ←←Ξ←←Ξ←←Ξ NOW IS THE TIME FIRST 55 CHARACTERS OF MESSAGE IN THAT BLOCK. NOTE: When listing is complete, alarm will sound once. If no messages are recorded on tape, alarm will sound once and display will be blank.		
77	Depress SPACE BAR.	Tape heading listing extinguishes, and Control Mode message appears on display.	
78	Using the cursor control keys, position cursor ① to character space to left of Rec Tape Block Number and enter an upper case R	Cursor moves under control of cursor control key. R appears on display.	

STEP	PROCEDURE	RESULTS	TROUBLE ANALYSIS
78 (Cont)	(2) Depress LINE FEED.	Cursor returns to its original position. Rec Tape rewinds. *** appears in block number while tape is rewinding. When rewind is complete, 000 REC TAPE BLOCK NUMBER is displayed.	
79	Using the cursor control keys, or CURSOR TAB key.		
	(1) Position cursor to underline next to 11 in line 11.	Cursor moves under control of the cursor positioning keys.	
	(2) Enter an upper case X.	X appears on display	
	(3) Position cursor to 1 after ST = 1 in line 11.	Cursor moves under control of the cursor positioning keys.	
	(4) Overwrite the 1 with a 2.	2 appears on display.	
	(5) Position cursor to 2 after RT = 2 in line 11.	Cursor moves under control of the cursor positioning keys.	
	(6) Overwrite the 2 with a 1.	1 appears on display.	
	(7) Depress LINE FEED key.	Cursor returns to its original position in line 1.	
	NOTE: The above procedure has reassigned Cassette 1 as the Receive Cassette and Cassette 2 as the Send Cassette.		

C. OFF-LINE CHECKOUT PROCEDURES (Contd)

1. TERMINALS (Contd)

STEP	PROCEDURE	RESULTS	TROUBLE ANALYSIS
80	Using the cursor control keys, or CURSOR TAB key. (1) Position cursor to first underline in row 6 (2) Enter a upper case X. (3) Depress LINE FEED. INDICATES BLOCK NUMBER 001 THE QUICK BROWN FOX JUMPED 002 ←←Ξ←←Ξ←←Ξ NOW IS THE TIME 003 THE QUICK BROWN FOX JUMPED 004 ←←Ξ←←Ξ←←Ξ NOW IS THE TIME FIRST 55 CHARACTERS OF MESSAGE IN THAT BLOCK. NOTE: When listing is complete, alarm will sound once. If no messages are recorded on tape, alarm will sound once and display will be blank. NOTE: At any time during the listing of Tape Heading, the space bar may be depressed halting the Tape Heading listing. Depressing the space again will start the listings. If listing exceeds 24 lines (capacity of display), listing will stop at 24th line. Depressing the space bar will cause the next 24 listings to be displayed.	Cursor moves under control. X appears on display. Control mode message extinguishes, and the Send Tape headings are listed.	
81	Depress SPACE BAR.	The Send Tape Heading listing extinguishes, and the control message appears on display.	
82	Using the cursor control keys or CURSOR TAB key. (1) Position cursor over first 0 in line 3. (2) Enter 001. (3) Depress LINE FEED.	Cursor moves under control of the cursor control keys. The current block number is overwritten with 001. Send Block Number changes counting down to 000 and then up to 001.	

STEP	PROCEDURE	RESULTS	TROUBLE ANALYSIS
83	Depress CNTRL MODE key.	Control Mode message extinguishes and cursor returns to home position.	
84	Depress DISP LCL. Depress REC TAPE LCL. Depress PTR LCL. Depress SEND TAPE LCL.	DISP LCL lamp lights. REC TAPE LCL lamp lights. PTR LCL lamp lights. The Send Tape transfers all its messages (4). The display will copy to first ETX and DISP LCL will extinguish. The Printer and Rec Tape will copy all messages. The SEND TAPE LCL lamp will extinguish when the message transfer is completed.	
85	Depress REC TAPE LCL. Depress PTR LCL. Depress HOME. Depress CLEAR.	REC TAPE LCL lamp extinguishes. PTR LCL lamp extinguishes. Cursor goes to home position. Message is cleared from display.	
86	Depress CNTRL MODE key.	Control Mode message appears.	
87	Using the cursor control keys. (1) Position cursor over first 0 in Send Tape Block number. (2) Enter 001. (3) Position cursor over underline in line 8. (4) Enter an upper case X. (5) Depress LINE FEED.	 Cursor moves under control of the cursor control keys. 001 appears in Send Tape Block number. Cursor moves under control of cursor control key. X appears on display. Send tape rewinds to block 001. DISP LINE and DISP LCL lamps start flashing indicating monitor data on display mode.	

C. OFF-LINE CHECKOUT PROCEDURES (Contd)

1. TERMINALS (Contd)

STEP	PROCEDURE	RESULTS	TROUBLE ANALYSIS
88	Depress CNTRL MODE key.	Control Mode message extinguishes and blank display with cursor in home position is displayed.	
89	Depress REC TAPE LCL. Depress PTR LCL. Depress DISP LCL. Depress SEND TAPE LCL.	REC TAPE LCL lamp lights. PTR LCL lamp lights. DISP LCL lamp stays on steady DISP LINE continues to flash. SEND TAPE LCL lamp lights. Send Tape transmits all four messages recorded on it. Printer, Rec Tape and Display copy all four messages.	
90	Depress REC TAPE LCL. Depress PTR LCL. Depress DISP LCL.	REC TAPE LCL lamp extinguishes. PTR LCL lamp extinguishes. DISP LCL starts to flash.	
91	Depress CNTROL MODE key.	Received message extinguishes, and Control message appears on display.	
92	Using the cursor control keys or CURSOR TAB key. (1) Position cursor over P in line 3. (2) Enter an upper case R. (3) Position cursor over X in line 8, depress SPACE BAR. (4) Position cursor to first underline in line 9. Enter three upper cases Xs. (5) Depress LINE FEED.	Cursor moves under control of the cursor control keys. R overwrites P. X is deleted from display. XXX appears on display. DISP LINE and DISP LCL lamps stop flashing and are extinguished. Send and Rec Tapes rewind. *** appear in the tape block numbers while rewind is completed, 000 appears in the Rec Tape Block Number. 000 appears in the Send Block Number.	

STEP	PROCEDURE	RESULTS	TROUBLE ANALYSIS
93	Using the cursor control keys or CURSOR TAB key.		
	(1) Position the cursor to the underline next to 11 in line 11.	Cursor moves under control of the cursor positioning keys.	
	(2) Enter an upper case X.	X appears on display	
	(3) Position the cursor to the 2 after ST=2.	Cursor moves under control of the cursor positioning keys.	
	(4) Overwrite the 2 with a 1.	1 appears on display.	
	(5) Position the cursor to the 1 after RT=1.	Cursor moves under control of the cursor positioning keys.	
	(6) Overwrite the 1 with a 2.	2 appears on display.	
	(7) Depress the LINE FEED key.	Cursor returns to its original position in line 1.	
	NOTE: The above procedure has reassigned Cassette 1 as the Send Cassette and Cassette 2 as the Receive Cassette.		
94	Using the cursor positioning keys or CURSOR TAB key, position the cursor to the first underline following 9 in line 9.	Cursor moves under control of the cursor positioning keys.	
	Enter three upper case Xs.	XXX appears on display.	
	Depress the LINE FEED key.	Cursor returns to its original position in line 1. REC tape (Cassette 2) rewinds. *** appears in the Tape Block Number while rewind is taking place.	
95	For KDPM[2] sets, go to 2. PRINTER CHECKOUT, Page 3-32. For KDPM[3] sets go to D. MONITOR TAPE CASSETTE CHECKOUT, Page 3-33.		

C. OFF-LINE CHECKOUT PROCEDURES (Contd)

2. PRINTER CHECKOUT

Preliminary Instructions

(1) Ribbon and paper should be loaded.
(2) The switches (top right of printer, cabinet cover raised) should be placed in the following positions:
LF -- 1
Test -- Off
Forms (tractor feed only) -- On
(3) Close cabinet cover.
(4) Perform Steps 1 through 6 of checkout procedure.

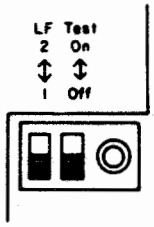

Friction Feed

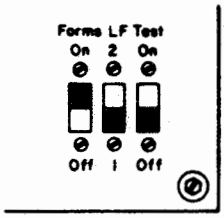

Tractor Feed

STEP	PROCEDURE	RESULTS	TROUBLE ANALYSIS
1	Momentarily depress PAPER button (red) on printer cabinet cover.	Paper feeds out as long as button is depressed.	
2	TRACTOR FEED PRINTER ONLY Depress and release FORM ADVANCE button (black) on printer cabinet cover.	Paper feeds out until first line of next form is reached, then stops.	
3	Unlatch and raise printer cabinet cover.		
4	Raise cover Interlock switch to maintenance position.		
5	Set Test switch to ON, allow printer to print several lines, then turn Test switch OFF.	Printer turns on and prints font identification symbol A A or A B repeatedly until switch is turned off.	
6	TRACTOR FEED PRINTER Tear off next form under pedestal top, then depress PAPER button on printer cabinet cover until last form passes through printer. Reload forms, guide first form through window, and close cabinet cover.	PAPER lamp lights. PAPER lamp extinguishes.	

D. MONITOR TAPE CASSETTE CHECKOUT

The off line checkout procedure of Part C does not check the operation of the monitor tape cassette since the monitor tape cassette has no local mode of operation. To perform an on-line check of the monitor tape cassette, two methods are available, depending on system protocol.

1. METHOD 1

If the system provides for on-line testing of terminals, assign one cassette drive to the monitor cassette function, then a sample test message may be sent to the Test Center. After the test message has been sent, the monitor tape should be rewound, reassigned to the send cassette and a local Send Tape to Display transfer done. The message can then be checked to insure the monitor tape correctly copied the sent message. Rewind the tape, reassign tape to be the receive tape. Perform the erase function on cassette and then reassign the cassette drive.

2. METHOD 2

If system protocol does not allow on-line testing and associated modem has the capability of an analog loopback test, and analog loopback tests are allowed in the system, place the modem in the analog loopback test mode. Refer to manufacturers operations manual for procedure. Be sure that in the analog loopback test mode the moden will turn on the Clear To Send (pin 4), Data Set Ready (pin 6) and Carrier On (pin 8) to the terminal before attempting checkout. If terminal is operating in the isochronous mode (Option V-1) the modem must also supply Send Clock (SCT) on pin 15 and Receive Clock (SCR) on pin 17. If neither Method 1 or 2 are available at the time of checkout, this checkout can be performed as part of the on-line back-to-back checkout.

3. CHECKOUT PROCEDURE

STEP	PROCEDURE	RESULTS	TROUBLE ANALYSIS
1	Prepare a test message on display in keyboard-display mode (DISP LINE, DISP LCL and DISP SEND lamps not lit). Start message with S_{O_H}. End message with E_{T_X}. Home cursor.	Message appears on display as typed on keyboard.	

D. MONITOR TAPE CASSETTE CHECKOUT (Contd)

3. CHECKOUT PROCEDURE (Contd)

STEP	PROCEDURE	RESULTS	TROUBLE ANALYSIS
2	Depress PTR LINE. Depress DISP SEND. Depress DISP LINE.	PTR LINE lamp lights. DISP SEND lamp lights. DISP LINE lamp lights. Cursor moves through message and stops at character position after E_{T_X}. Printer motor starts and printer copies message. Display lamps will extinguish, if Option U2 is installed. The DISP SEND lamp will extinguish if Option U1 is installed.	
3	Depress DISP LINE if lit. Depress CNTRL MODE	DISP LINE lamp extinguishes. Test message disappears from display and control message appears.	
4	Using cursor control keys or CURSOR TAB key. (1) Position cursor to the character position to the left of the Tape Block Number in line 5. (2) Enter an upper case R. (3) Depress the LINE FEED key.	 Cursor moves under control of the cursor positioning keys. R appears on display. Cursor returns to its original position in line 1. *** appears in the monitor tape block while the monitor tape is rewinding. When the rewind is completed, 000 appears in the monitor tape block.	

STEP	PROCEDURE	RESULTS	TROUBLE ANALYSIS
5	Using the cursor positioning keys, (1) Position cursor to the underline after 11 in line 11. (2) Enter an upper case X. (3) Position cursor to the 1 after ST = 1. (4) Overwrite the 1 with the number of cassette assigned as Monitor Tape. (5) Position the cursor to the number after MT = number. (6) Overwrite the number with a 0. (7) Depress the LINE FEED key.	 Cursor moves under control of the cursor positioning key. X appears on display. Cursor moves under control of the cursor positioning keys. The number appears on display. Cursor moves under control of the cursor positioning keys. 0 appears on display. Cursor returns to its original position in line 1.	
	NOTE: The monitor has now been reassigned as the send tape and no tape has been reassigned as the monitor tape.		
6	Enter block number of test message (001 if cassette was not used before) in line 3. Depress LINE FEED.	Send tape cassette positions to test message.	
7	Depress CNTRL MODE. Position cursor to the beginning of the line after original message. Depress DISP LCL. Depress SEND TAPE LCL.	Control message disappears and original test message appears. DISP LCL lamp lights. SEND TAPE LCL lamp lights. Test message appears on display below original message. These messages should be the same, except line feeds (≡) which were sent and stored on monitor tape are displayed as ←, ←≡.	

D. MONITOR TAPE CASSETTE CHECKOUT (Contd)

3. CHECKOUT PROCEDURE (Contd)

STEP	PROCEDURE	RESULTS	TROUBLE ANALYSIS
8	Depress the SEND TAPE LCL key. Home cursor. Depress CLEAR key.	SEND TAPE LCL lamp extinguishes. Cursor goes to home position. Both messages are cleared from display.	
9	Depress CNTRL MODE key.	Control message appears on display.	
10	Using the cursor positioning key or CURSOR TAB key. (1) Position the cursor to the character space to the left of the Send Tape Block number. (2) Enter an uppercase R. (3) Depress the LINE FEED key.	Cursor moves under control of the cursor positioning key. R appears on display. Cursor returns to its original position in line 1. *** appears in the Send Tape Block number while the Send Tape is rewinding. 000 appears in the Send Tape Block number when rewind is completed.	
11	Using cursor positioning keys. (1) Position cursor to underline after 11 in line 11. (2) Enter an upper case X. (3) Position cursor to the number after ST = number. (4) Overwrite the number with a 2. (5) Position the cursor to the 2 after RT = 2. (6) Overwrite the 2 with a 0. (7) Depress the LINE FEED key.	Cursor moves under control of the cursor positioning keys. X appears on display. Cursor moves under control of the cursor positioning keys. 2 appears on display. Cursor moves under control of the cursor positioning keys. 0 appears on display. Cursor returns to its original position in line 1.	

STEP	PROCEDURE	RESULTS	TROUBLE ANALYSIS
11 (Cont)	NOTE: The cassette used as monitor tape has now been reassigned as the Receive Tape.		
12	Position the cursor to the first underline following 9 in line 9.	Cursor moves under control of the cursor positioning keys.	
	Enter three uppercase Xs.	XXX appears on display.	
	Depress the LINE FEED key.	Cursor returns to the original position in line 1. The Erase function is performed on the tape in Cassette 2.	
13	Using the cursor positioning key or CURSOR TAB key.		
	(1) Position the cursor to the underline after 11 in line 11.	Cursor moves under control of the cursor positioning keys.	
	(2) Enter an uppercase X.	X appears on display.	
	(3) Position the cursor to the 2 after ST = 2.	Cursor moves under control of the cursor positioning keys.	
	(4) Overwrite the 2 with a 1.	1 appears on display.	
	(5) Position the cursor to the 0 after RT = 0.	Cursor moves under control of the cursor positioning keys.	
	(6) Overwrite the 0 with a 2.	2 appears on display.	
	(7) Position the cursor to the 1 after MT = 1.	Cursor moves under control of the cursor positioning keys.	
	(8) Overwrite the 1 with a 0.	0 appears on display.	
	(9) Depress the LINE FEED key.	Cursor returns to its original position in line 1.	
	NOTE: Cassette 1 has now been reassigned as the Send Tape, Cassette 2 has been reassigned as the Receive Tape and the Monitor Tape has not been assigned.		

D. MONITOR TAPE CASSETTE CHECKOUT (Contd)

3. CHECKOUT PROCEDURE (Contd)

Remove the half-duplex strap between terminals 2 and 3 of TB101 of the interface assembly, if it was installed for this test. Replace the 303181 or 303184 circuit card in slot Z4, if it was removed for this test. Reconnect the signal line connections in the interface unit at the rear of the set.

E. ON-LINE CHECKOUT

To perform an on-line check of the set, two methods are available depending on system protocol.

1. METHOD 1

If system protocol allows for on-line testing, a sample test message may be sent to the Test Center in both the manual and poll/select modes. In the poll/select mode, the Test Center must send polling sequences before the set under test can send, and selecting sequences before the set under test can receive.

2. METHOD 2

If system protocol does not allow on-line testing or if transmission facilities to the Test Center are not available, an alternative method called back-to-back can be used.

This method requires the use of another functional KD Set (referred to as test set). The test set should be optioned for 8-level ASCII code operation at the same Baud rate as the set being tested is optioned (Option ZZ). The test set should be connected as indicated below.

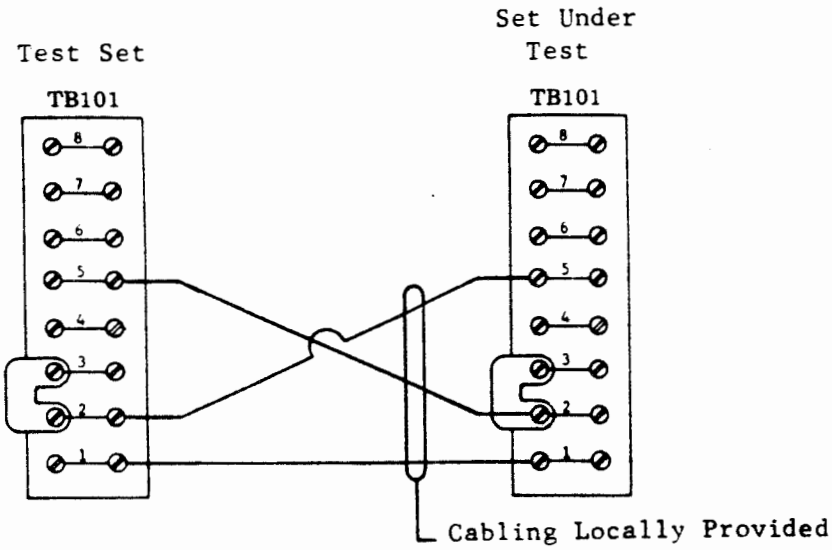

In either arrangement, the clear-to-send input must be turned on (+6 V). If no clear-to-send input is available, temporarily remove the 303181 or 303184 circuit card in slot Z4 of each interface assembly.

The manual mode checkout must be performed with the POLL/SEL or S/R lamp not lit and the 5-level communication interface not selected (no character X in line 1 of control mode) in both the test set and the set under test.

STEP	PROCEDURE	RESULTS	TROUBLE ANALYSIS
1	Locally prepare a test message on set under test. Start message with S_{O_H} and end message with E_{T_X}.	Message appears on display.	
2	Condition test set to receive (DISP SEND and POLL/SEL not lit; DISP LINE lamp lit).		
3	Home cursor on set under test.	Cursor goes to home position.	
	Depress DISP SEND.	DISP SEND lamp lights.	
	NOTE: If Option AB-1 (Send/Receive is selected, depressing DISP SEND will also light DISP LINE.		
	Depress DISP LINE.	DISP LINE lamp lights.	
		Cursor moves through message and stops at character position after E_{T_X}.	
		Message is received on display of test set.	
	NOTE: If Option Z1 (Home on Send) is installed, the cursor will go home when the DISP LINE key is depressed. If Option F1 (printer on-line required to send), PTR LINE indicator must be lighted before sending will start. If Option H1 or (Monitor Tape on required to send) is installed, MONITOR TAPE indicator must be lighted before sending will start.		
4	Locally copy test message on display on receive tape of the set under test. (Refer to How to Operate Manual 559 for procedure.)		
	Reassign Cassette as the Send Tape. (Refer to How to Operate Manual 559 for procedure.)		

E. ON-LINE CHECKOUT (Contd)

3. MANUAL MODE CHECKOUT

STEP	PROCEDURE	RESULTS	TROUBLE ANALYSIS
4 (Cont)	Position Send Tape to send test message. Condition test set to receive. Depress SEND TAPE LINE.	Send tape sends test message and test set receives message on display.	
5	For terminals with Option AB-1 (Send/Receive) selected go to 7. On set under test, enter Control Mode and place keyboard on-line (type a character X in line 10 keyboard on-line and depress LINE FEED). Exit Control Mode. Condition test set to receive. Type a test message on keyboard.	Message will be received on test set display. NOTE: If Option D2 was selected, message will be copied on set under test display also.	
6	Enter Control Mode. Position the cursor over the X in line 10 and depress the space bar and then depress the LINE FEED key. Exit Control Mode.		
7	Locally prepare a test message on test set. Start message with S_{O_H} and end with E_{O_T}. Condition set under test to receive (DISP SEND lamp not lit: DISP LINE, PTR LINE, and REC TAPE LINE lamps lit. Send test message from test set.	Display, printer and receive tape receive message from test set. NOTE: Set under test will take received E_{O_T}, **display it on** display and **record it on** receive tape.	

STEP	PROCEDURE	RESULTS	TROUBLE ANALYSIS
7 (Cont)	If Option N. is enabled, DISP LINE lamp will extinguish. Depress PTR LINE and RECEIVE TAPE line keys (and DISP LINE if option N. is disabled).	All keyboard lamps are OFF.	
8	To check receive tape: Depress CNTRL MODE. Place an X in line 7 of control message. Depress LINE FEED.	Control Mode message appears. Receive tape listing will be displayed with first 55 characters of test message.	
9	Depress the Space bar. Delete the X in line 7. Rewind all tapes and reassign Cassettes 1, 2 and 3 so that Cassette 1 is Send Tape Cassette 2 is Receive Tape and Cassette 3 is Monitor Tape. Refer to How to Operate Manual 559 for procedures.	The Control Mode message appears on display.	
10	For terminal with Option AB-1 (Send/Receive) selected only. Place the test set in the receive condition. Depress the S/R key. Type a test message on the keyboard of the set under test.	The S/R and DISP LINE keys light. The message is received on the test set display. NOTE: If Option D2 was selected, message will be copied on set under test display also.	

4. POLL/SELECT MODE CHECKOUT

For terminal with Option AB2 (Poll/Select) selected only in this checkout procedure, the set under test is in the poll/select mode (lamp lit) and the test set is in the manual mode (POLL/SEL lamp not lit) and Option Z2 (send from cursor position installed) and Option U1 (display goes on-line receive after on-line send.) In this checkout procedure, the test set is functioning as the Central Processing Unit and must, therefore, generate all the poll and select codes. To perform this, the test set keyboard must be on-line (character X in line 10 of control mode).

E. ON-LINE CHECKOUT (Contd)

4. POLL/SELECT MODE CHECKOUT (Contd)

STEP	PROCEDURE	RESULTS	TROUBLE ANALYSIS
1	Condition test set display to receive (DISP SEND lamp not lit; DISP LINE lamp lit). With no sending device on set under test being selected to send, send the following poll sequence from test set keyboard. E_{O_T} $S_{I_{D_1}}$ $S_{I_{D_2}}$ D_{C_1} E_{N_Q} $S_{I_{D1}}$ = First station identity character of set under test. $S_{I_{D2}}$ = Second station identity character of set under test.	Set under test will receive poll sequence and reply with E_{O_T} (no traffic). Reply is displayed on test set monitor.	
2	Locally prepare a test message on set under test display. Start message with S_{O_H} and end message with E_{O_T}. Home cursor. Prepare set under test display to send (DISP SEND and DISP LINE lamps lit).	No message transfer will take place until poll sequence is received by set under test.	
	NOTE: If Option F1 (printer on-line required to send) is installed, PTR line should be lighted. If Option H1 (monitor tape on required to send) is installed, Monitor Tape should be lighted.		
	Send poll sequence from test set keyboard. E_{O_T} $S_{I_{D_1}}$ $S_{I_{D_2}}$ D_{C_1} E_{N_Q}	The set under test receives poll sequence and then sends test message to test set which displays message. Any further transmission from test set to set under test will be ignored until set under test receives a valid poll or select code.	

STEP	PROCEDURE	RESULTS	TROUBLE ANALYSIS
3	In test message on set under test display, change message ending character E_{O_T} to E_{T_X}. Condition display to send on-line as outlined in Step 2. Send poll sequence from test set keyboard as in Step 2.	Test message is received on test set display as in Step 2. However, now the printer only of set under test is conditioned to receive a message. Characters typed on test set keyboard will be printed on set under test printer until it receives an E_{O_T}.	
4	On test set, enter control mode. Delete keyboard on line mode (delete character X in line 10). Depress **LINE FEED** and exit control mode. Locally prepare following message on test set display.		

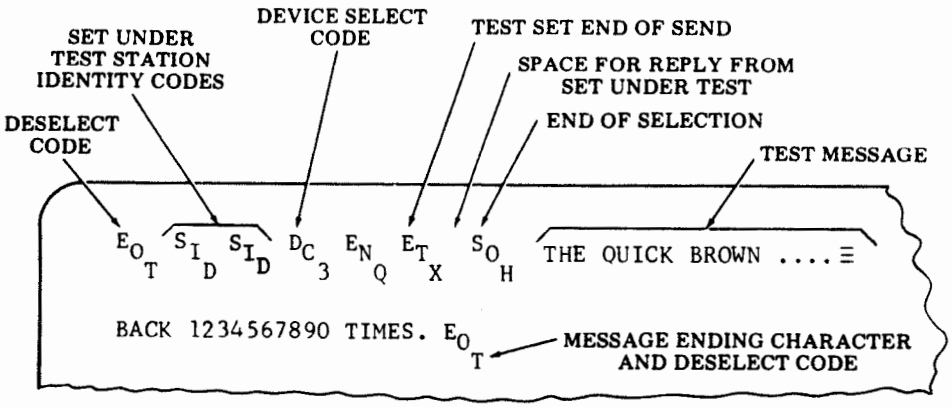

	Home cursor		

E. ON-LINE CHECKOUT (Contd)

4. POLL/SELECT MODE CHECKOUT (Contd)

STEP	PROCEDURE	RESULTS	TROUBLE ANALYSIS
4 (Cont)	Condition set under test display to receive (DISP SEND lamp not lit; DISP LINE lamp lit).		
	On test set, depress DISP SEND.	DISP SEND lamp lights.	
	Depress DISP LINE.	DISP LINE lamp lights. Test set sends E_{O_T} and switches back to on-line receive (DISP LINE lamp extinguishes).	
	Depress DISP LINE again.	Cursor moves to character position after E_{T_X}. Test set has sent select code sequence for set under test display. Set under test will answer with an A_{C_K} as display is ready to receive.	

RESPONSE FROM SET UNDER TEST

CURSOR POSITION

E_{O_T} S_{I_D} S_{I_D} D_{C_3} E_{N_Q} E_{T_X} A_{C_K} S_{O_H} THE QUICK BROWN ....Ξ

BACK 1234567890 TIMES. E_{O_T}

	Depress DISP LINE on test set again.	Cursor moves through message and stops at character position after E_{O_T}. Test set has sent test message and message appears on set under test display.	
5	Repeat Step 4 except place set under test display in local (DISP LCL lamp lit).	When set under test receives its select code for the display (D_{C_3}), the display is not	

STEP	PROCEDURE	RESULTS	TROUBLE ANALYSIS
5 (Cont)	Negative acknowledge to select sequence. Device not available or unable to receive.	available to the line to receive data. The set under test will therefore answer select code with a negative acknowledge (N_{A_K}).	
	E_{O_T} S_{I_D} S_{I_D} D_{C_3} E_{N_Q} E_{T_X} N_{A_K} S_{O_H} THE QUICK BROWN .... ≡ BACK 1234567890 TIMES. E_{O_T} (CURSOR POSITION)	Any further transmission to set under test will be ignored unless it is another select code sequence.	
6	Using procedure outlined in Step 4, the remaining receiving devices may be selected by substituting appropriate select code for D_{C_3}. See below. Select Code — Selects D_{C_2} — Printer and receive cassette D_{C_3} — Monitor D_{C_4} — Receive cassette only = — Printer only with option to select printer and receive cassette	When set under test set receives select code for a receiving device, it will answer A_{C_K} if device is available and able to receive. If device is unavailable or unable to receive, set will answer N_{A_K}.	

PART 4 — TROUBLESHOOTING

INDEX

		PAGE
A.	GENERAL	4-1
B.	TERMINAL ANALYSIS	4-2
C.	COMPONENT ANALYSIS	4-5
1.	40PSU103 POWER SUPPLY	4-5
2.	DISPLAY MONITOR	4-9
3.	OPCON	4-17
4.	PRINTER -- GENERAL	4-23
5.	PRINTER -- 80 COLUMN FRICTION FEED	4-29
6.	PRINTER -- 80 COLUMN TRACTOR FEED	4-50
7.	PRINTER -- 132 COLUMN TRACTOR FEED	4-78
8.	CONTROLLER	4-96
9.	INTERFACE	4-105
10.	CASSETTE DRIVE	4-110

A. GENERAL

To use the troubleshooting information, always start with Analysis Question 1 of B. TERMINAL ANALYSIS, and follow the indicated procedure to the directive which specifies proceeding to C. COMPONENT ANALYSIS. Then follow the specific component analysis indicated (ie, power supply, display monitor, opcon, etc) starting with Analysis Question 1 to isolate and correct the trouble by replacing the indicated defective component.

If replacement of the part or subcomponent indicated in C. COMPONENT ANALYSIS does not correct the trouble, replace the next higher order of component (ie, fuse, power distribution assembly, display monitor, or entire terminal).

When installing a replacement component, make certain that all options (if present) in this component are implemented for proper set operation.

Where more than one component is specified for replacement, they should be substituted one at a time in the order specified. The original component should be replaced if the trouble is not corrected before making the next indicated substitution.

Once the trouble has been corrected, the terminal should be checked out to be sure that it is performing properly. Refer to PART 3 — OPERATIONAL CHECKOUT.

Note: When ordering replaceable parts or components, unless otherwise specified, prefix each part number with the letters "TP" (ie, TP410055).

The following caution must be observed when troubleshooting a Model 40 Station or Set.

A. GENERAL (Contd)

Caution 1: Turn off all power or signal sources before removing or replacing any component.

Caution 2: To avoid possible internal damage to circuitry, wear a 346392 static discharge strap connected to ground to allow static discharge before handling circuit cards for removal or replacement. Avoid touching circuit lands or components as much as possible.

Attach static ground strap tightly to wrist.

Attach clip end of static discharge strap to frame ground.

To locate components, circuit cards, connectors, test switches, indicator lamps and other elements indicated in the troubleshooting information, refer to PART 6 — COMPONENT ACCESS.

For wire color codes, cable connector, and other wiring indicated for continuity checks etc, in troubleshooting, refer to wiring diagrams in applicable wiring diagram packages.

The following test equipment is required for troubleshooting the components.

- Volt-Ohm-Milliameter, Triplett Model 630 APL or equivalent.
- Oscilloscope, Tektronic Model 7904 e/w:
  - 2 — 7A16A Single Trace Amplifiers
  - 1 — 7B70 Time Base Unit

B. TERMINAL ANALYSIS

ANALYSIS QUESTION	"YES" RESPONSE DIRECTIVE	"NO" RESPONSE DIRECTIVE
1. If Option AB-2 is selected does POLL/SEL lamp on opcon light when power is turned on and if printer is part of set does the PTR line lamp light approximately 14 seconds after power is turned on? If Option AB-1 is selected, does depressing the S/R key light the S/R and the DISP LINE key? NOTE: If Option F. is enabled in the S/R mode, the PTR. LINE lamp will light as in POLL/SEL mode.	Go to 4.	Go to 2.

ANALYSIS QUESTION	"YES" RESPONSE DIRECTIVE	"NO" RESPONSE DIRECTIVE
2. Do fans turn when power is turned on?	Go to 3.	Check ac to fan. Refer to wiring diagram. Refer to PART 6 -- COMPONENT ACCESS. Power cable connected. Power switch on. AC present at fan assembly connector.
3. Are all three LED indicators in power supply on?	Go to Page 4-17, 3. OPCON. Go to Page 4-96, 8. CONTROLLER.	Go to Page 4-5, 1. 40PSU103 POWER SUPPLY.
4. Does raster appear on display with brightness control to full intensity (CCW)?	Go to 10.	Go to 5.
5. Is I5 red DRIVE lamp (in display monitor) on?	Go to 6.	Go to Page 4-9, 2. DISPLAY MONITOR.
6. Is I7 red PILOT lamp (next to fuse on power distribution assembly in display monitor) on?	Go to 7.	Go to Page 4-9, 2. DISPLAY MONITOR.
7. With monitor OFF/ON control switch ON (CCW) and operator brightness control to full intensity (CCW), is raster visible? Is fan moving underneath monitor?	Go to 9.	Go to 8. If fan is not moving, Go to Page 4-9, 2. DISPLAY MONITOR.
8. Is I6 HIGH VOLTAGE lamp in display monitor on?	Check Master Brightness adjustment (Page 5-3). Go to 9.	Go to Page 4-9, 2. DISPLAY MONITOR.
9. Is cursor displayed on monitor?	Go to 10.	Go to Page 4-9, 2. DISPLAY MONITOR. Go to Page 4-96, 8. CONTROLLER.

B. TERMINAL ANALYSIS (Cont)

ANALYSIS QUESTION	"YES" RESPONSE DIRECTIVE	"NO" RESPONSE DIRECTIVE
10. In the keyboard display mode, can data (including editing functions) be entered from the opcon to display monitor on all segments?	Go to 11.	Go to Page 4-17, 3. OPCON Go to Page 4-9, 2. DISPLAY MONITOR. Go to Page 4-96, 8. CONTROLLER.
11. Are characters displayed on display monitor distorted?	Go to Page 4-9, 2. DISPLAY MONITOR. Go to Page 4-96, 8. CONTROLLER.	Go to 12.
12. Do characters displayed on display monitor correspond to those generated from opcon?	Go to 13.	Go to Page 4-96, 8. CONTROLLER. Go to Page 4-17, 3. OPCON.
13. Does Control Mode message appear on display when CNTRL MODE key is depressed?	Go to 14.	Go to Page 4-17, 3. OPCON. Go to Page 4-96, 8. CONTROLLER.
14. Does set respond correctly to commands entered on the display in the Control Mode?	Go to 15.	Go to Page 4-96, 8. CONTROLLER.
15. Does set have a printer?	Go to 18.	Go to 16.
16. Does set have magnetic tape cassettes?	Go to 22.	Go to 17.
17. Does set perform properly on line?	Place in service.	Go to Page 4-96, 8. CONTROLLER.
18. Does printer respond properly when the PTR LCL key is used?	Go to 20.	Go to 19.
19. Does type carrier symbol (A/A or A/B) print in every column when printer test switch TS9 is on and printer cover is closed or TS5 interlock switch is in maintenance position?	Go to Page 4-96, 8. CONTROLLER.	Go to Page 4-23, 4. PRINTER -- GENERAL.
20 Does printer receive on line properly?	Go to 21.	Go to Page 4-96, 8. CONTROLLER.

ANALYSIS QUESTION	"YES" RESPONSE DIRECTIVE	"NO" RESPONSE DIRECTIVE
21. Does set have magnetic tape cassettes?	Go to 22.	Place in service.
22. After a cassette is placed in the cassette drives, does the run-status lamp begin to flash?	Go to Page 4-109, 10. CASSETTE DRIVE.	Go to 23.
23. When in the Control Mode, do block numbers appear in the cassette block number?	Go to 24.	Check wiring to cassette. Cassette power on. Go to Page 4-96, 8. CONTROLLER. Go to Page 4-110, 10. CASSETTE DRIVE.
24. Does cassette respond properly in local operation?	Go to 25.	Go to Page 4-96, 8. CONTROLLER.
25. Do cassettes send and receive properly on line?	Place in service.	Go to Page 4-96, 8. CONTROLLER.

C. COMPONENT ANALYSIS

1. 40PSU103 POWER SUPPLY

ANALYSIS QUESTION	"YES" RESPONSE DIRECTIVE	"NO" RESPONSE DIRECTIVE
1. With set plugged in and power on, are all LED indicators on?	Go to 2.	Go to 5.

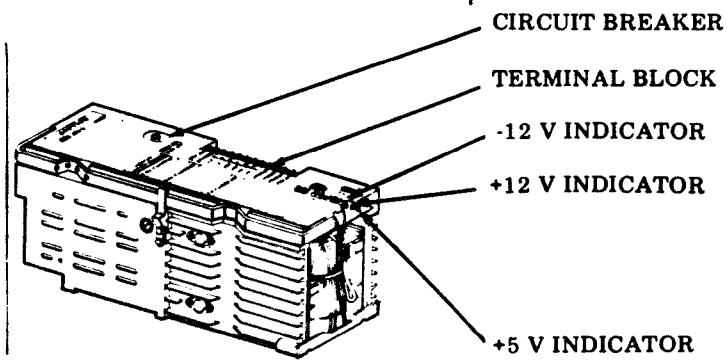

C. COMPONENT ANALYSIS (Contd)

1. 40PSU103 POWER SUPPLY (Contd)

ANALYSIS QUESTION	"YES" RESPONSE DIRECTIVE	"NO" RESPONSE DIRECTIVE
2. Are all voltages correct at output terminal block? Check with 20,000 ohm per volt meter. 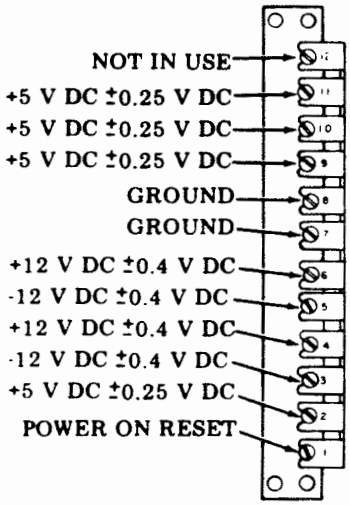	Turn power off and back on again. Go to 3.	Turn power off. Remove all cables from logic package to power supply. Retighten all power supply connector screws. Turn power on. Go to 14.
3. Does RUN lamp light?	Place power supply in service.	Momentarily jump terminal 7 (ground) of the output terminal strip to terminal 1 (POR) of the output terminal strip. Go to 4.
4. Repeat Question 3.	Replace power supply.	Trouble is in logic module. Go to Page 4-96, 8. CONTROLLER.
5. Are all LED indicators off?	Go to 6.	Go to 11.
6. Is circuit breaker in ON position? (Down -- white band not showing.)	Go to 7.	Depress circuit breaker. Go to 10.

ANALYSIS QUESTION	"YES" RESPONSE DIRECTIVE	"NO" RESPONSE DIRECTIVE
7. Is ac power connector at rear of power supply connected? NOTE: Power supply must be slightly raised to check for above.	Go to 8.	Connect ac connector. Go to 1.
8. Is there 115 V ac at power supply connector?	Go to 9.	Check main power input switches, cabinet wiring, and connectors, etc, per wiring diagrams. Correct problem. Go to 1.
9. Are fans at rear of logic module operable?	Turn power off. Remove cables from logic package to power supply terminal block. Retighten all screws. Turn power on. Go to 13.	Correct problem in fan assembly. Go to 1.
10. Did circuit breaker pop back to OFF position?	Replace power supply.	Go to 1.
11. Is +5 V dc LED indicator the only indicator off?	Turn power off. Wait approximately 30 seconds. Turn power on. Go to 12.	Turn power off. Remove cables from logic package to power supply. Retighten all screws. Turn power on. Go to 13.
12. Did +5 V dc LED indicator go on?	Go to 2.	Turn power off. Remove cables from logic package to power supply. Retighten all screws. Turn power on. Go to 13.
13. Are all three LED indicators on?	Go to 14.	Replace power supply.

C. COMPONENT ANALYSIS (Contd)

1. 40PSU103 POWER SUPPLY (Contd)

ANALYSIS QUESTION	"YES" RESPONSE DIRECTIVE	"NO" RESPONSE DIRECTIVE
14. Are all voltages correct at the output terminal block?	Turn power off. Reconnect all leads. Pull one (any) logic card from controller. Turn power on. Go to 15.	Replace power supply.
15. Repeat Question 14.	Replace logic card that was pulled. Power supply OK.	Continue pulling logic circuit cards until voltages are correct at output terminal block. Card pulled prior to voltages being corrected at output terminal block should be replaced.

2. DISPLAY MONITOR

Subassembly Identification

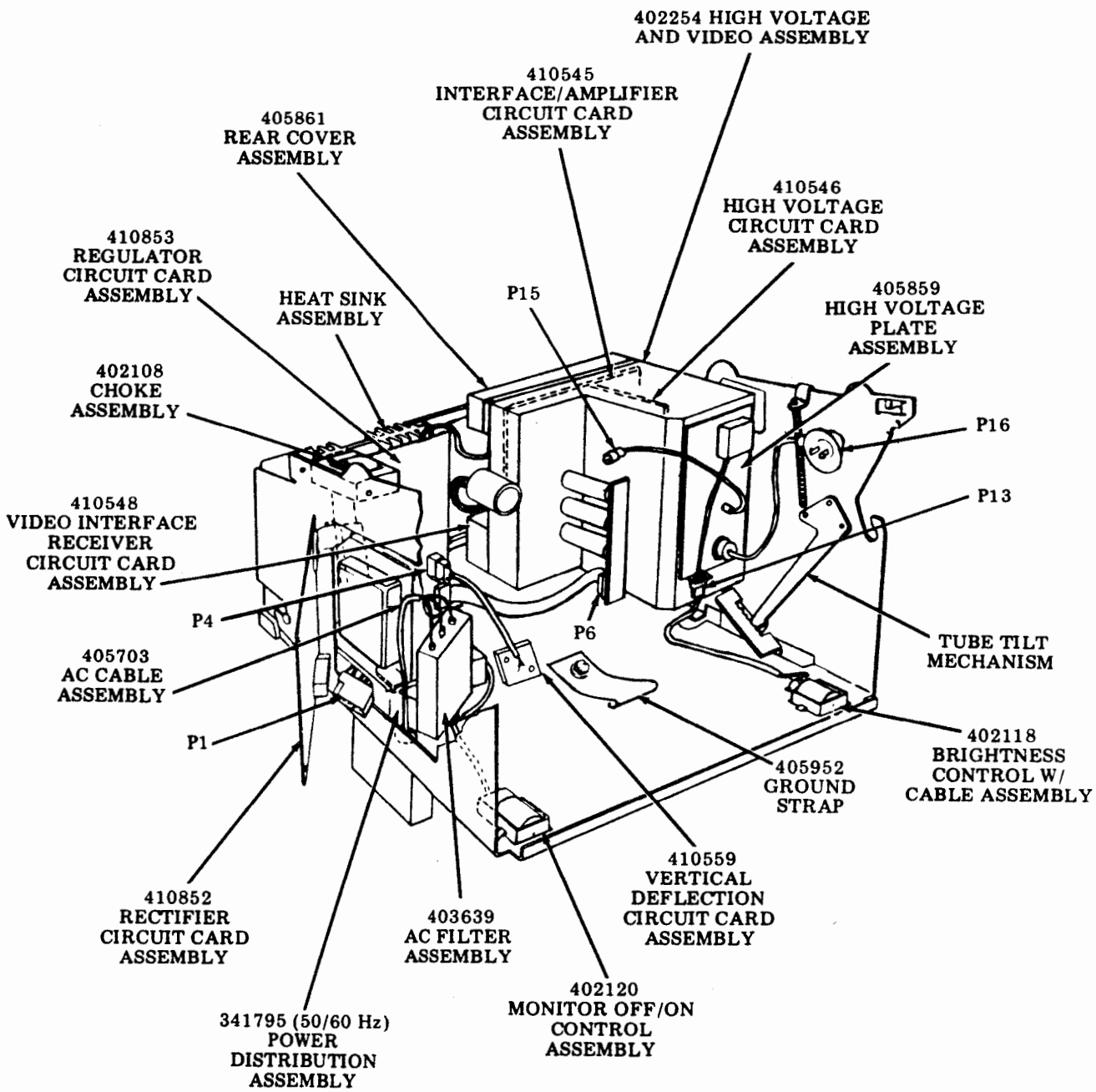

C. COMPONENT ANALYSIS (Cont)

2. DISPLAY MONITOR (Cont)

ANALYSIS QUESTION	"YES" RESPONSE DIRECTIVE	"NO" RESPONSE DIRECTIVE
1. With power ON and monitor ON/OFF control switch on (CCW), is fan moving underneath monitor?	Go to 3.	Go to 2.
2. Unplug AC cable from side of fan. Is 115 VAC present at end of cable?	Replace 408980 fan assembly. See Page 6-8, 4. DISASSEMBLY/REASSEMBLY for procedure.	Replace 406597 cable assembly. Refer to Page 6-24, 4. DISASSEMBLY/REASSEMBLY. Go to 3.
3. With power on, is I5 red DRIVE lamp on? (Typical failure is a dark screen -- no display.)	Go to 4.	Check that P901 connector is plugged into 402254 high voltage and video assembly. Check connections to 410548 circuit card. Replace 410545 circuit card. Replace 410548 circuit card. Check continuity of 402236 video cable assembly: P901, terminals 9, 10, 1 and 2 to P304, terminals 9, 10, 1 and 2, respectively.

ANALYSIS QUESTION	"YES" RESPONSE DIRECTIVE	"NO" RESPONSE DIRECTIVE
4. Is I7 PILOT lamp on? (Early Design) 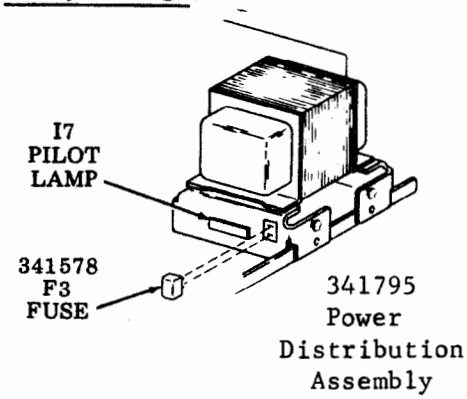 (Late Design) 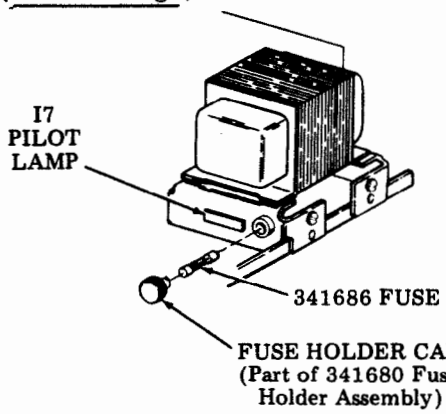 	Go to 6. 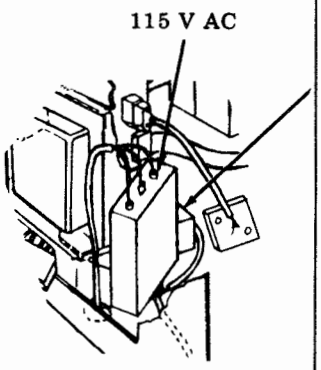 	Check F3 fuse for continuity. Replace if open circuit. Go to 5. If F3 fuse is good, check for 115 V ac on line side of 403639 ac filter assembly, terminals 1 and 2. If no 115 V ac, check continuity or replace 405703 ac cable assembly. If 115 V ac is present, check for 115 V ac at load side of 403639 ac filter assembly, terminals 1 and 2. Replace 403639 ac filter assembly if 115 V ac is <u>not</u> present. Check continuity or replace 402120 ac switch assembly if 115 V ac <u>is</u> present. Replace 341795 power distribution assembly.

C. COMPONENT ANALYSIS (Cont)

2. DISPLAY MONITOR (Cont)

ANALYSIS QUESTION	"YES" RESPONSE DIRECTIVE	"NO" RESPONSE DIRECTIVE
5. Does F3 fuse continue to fail when replaced?	Replace 410852 circuit card assembly. Replace 410853 circuit card assembly. Replace 341569 Q1 transistor on heat sink. Replace 318822 Q2 transistor on heat sink. Replace 402254 high voltage and video assembly.	Go to 6.
6. Are CRT filaments glowing? (Failure is no display -- dark screen.) 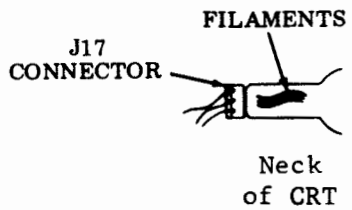 	Go to 7.	With display monitor PS3 control switch off (CW) and J17 connector disconnected from CRT neck, check for 5.4 V ac ±10% at J17 connector, terminals 1 to 8. 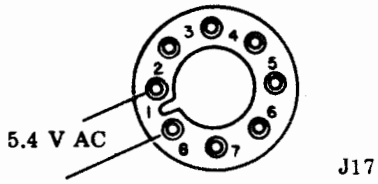 If 5.4 V ac is present, replace CRT. If no 5.4 V ac, check J20 connector for 5.4 V ac. Replace 405861 rear cover assembly if 5.4 V ac is present at J20 connector. Check continuity or replace 405863 filament cable assembly if no 5.4 V ac is present at J20 connector. Replace 341795 power distribution assembly.

ANALYSIS QUESTION	"YES" RESPONSE DIRECTIVE	"NO" RESPONSE DIRECTIVE
7. Are I4 65 V and I3 130 V UNREGULATED lamps on?	Go to 8.	Remove 410852 circuit card from display monitor and check for 135 V ac ±10% on P1 connector, terminals 4 to 5. If 135 V ac is present, replace 410852 circuit card (with a new card). If no 135 V ac, replace 341721 power distribution assembly.
8. Is I2 NORMAL lamp on? 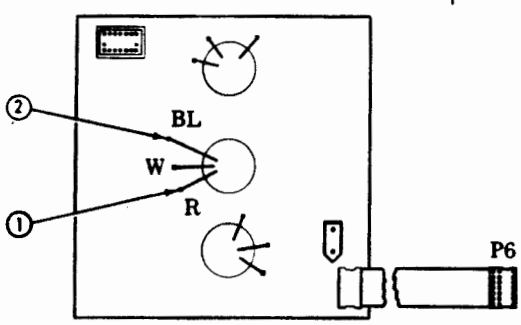 410853 Circuit Card Assembly	Go to 9.	Check for 190 V dc ±10% from test point ① on 410853 circuit card (red lead) to frame ground (chassis). If no 190 V dc, check that P2 connector is plugged into 410853 circuit card. If P2 connector is connected, replace 410852 circuit card. If 190 V dc is present, check for 130 V dc ±10% from test point ② on 410853 circuit card (blue lead) to frame ground (chassis). If no 130 V dc, replace 410853 circuit card. If 130 V dc is present, replace 318822 Q2 transistor on heat sink.

C. COMPONENT ANALYSIS (Contd)

2. DISPLAY MONITOR (Contd)

ANALYSIS QUESTION	"YES" RESPONSE DIRECTIVE	"NO" RESPONSE DIRECTIVE
9. Is I1 OVER VOLTAGE lamp off? (Typical trouble symptom -- display expanded horizontally.) 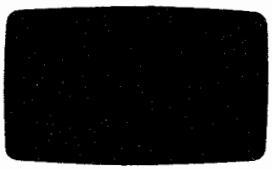	Go to 10.	Replace 410853 circuit card assembly in display monitor.
10. Is I6 HIGH VOLTAGE lamp on? (Typical failure is a dark screen -- no display.) 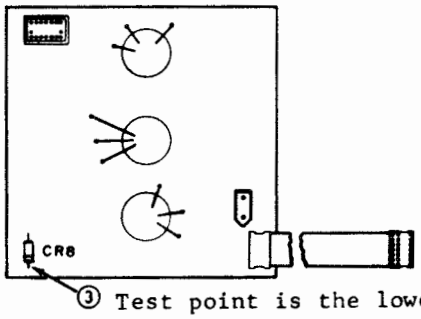 ③ Test point is the lowest component lead at lower left corner of card. 410853 Circuit Card Assembly	Go to 11.	Check that P3 connector is plugged into J3 connector of 402254 high voltage and video assembly. Check for 130 V dc ±10% at test point ③ on 410853 circuit card to frame ground (chassis). If no 130 V dc, replace 410853 circuit card. If 130 V dc is present, replace 402254 high voltage and video assembly.
11. Is there still a display problem?	Go to 12.	Display monitor is OK; problem is elsewhere.
12. Is there a bright horizontal line on display monitor?	Decrease brightness (rotate TS11 clockwise) until line is not bright. If horizontal line now appears dashed, go to 13. Check three wires from heat sink Q1 transistor to 410853 circuit card. Check for 65 V dc ±10% at test point ④ on 410853 circuit card to frame ground (chassis).	Go to 13. 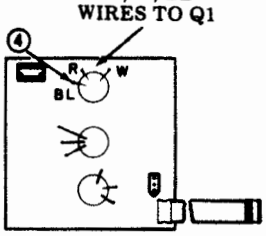 410853 Circuit Card Assembly

ANALYSIS QUESTION	"YES" RESPONSE DIRECTIVE	"NO" RESPONSE DIRECTIVE
12. (Cont)	If 65 V dc is present, replace heat sink 341569 Q1 transistor. Replace 410853 circuit card.	
13. Is there a dashed horizontal line on display monitor? 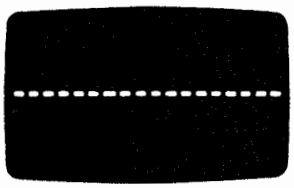	Check that P4 connector is plugged into 410853 circuit card. Replace heat sink 341568 Q3 transistor. Replace 410853 circuit card.	Go to 14.
14. Is there a raster (rectangular lighted background area visible when brightness is turned up -- TS11 full CCW) but no cursor, segment marker, or characters?	Replace 402254 high voltage and video assembly. Check continuity of 402236 video cable assembly: P901, terminals 11 and 12 to P304, terminals 11 and 12 respectively.	Go to 15.
15. Is display rolling?	Replace 410853 circuit card. Replace 402254 high voltage and video assembly. Check continuity of 402236 video cable assembly: P901, terminals 3 and 6 to P304, terminals 3 and 6 respectively.	Go to 16.

C. COMPONENT ANALYSIS (Contd)

2. DISPLAY MONITOR (Contd)

ANALYSIS QUESTION	"YES" RESPONSE DIRECTIVE	"NO" RESPONSE DIRECTIVE
16. Can brightness be controlled by turning TS11 operator brightness control?	Go to 17.	Check that P13 connector is plugged into J13 connector of 402254 high voltage and video assembly. Check continuity of 402118 brightness control assembly. Replace 402254 high voltage and video assembly.
17. Is display reduced to approximately 3/4 inch in height? 	Replace 410853 circuit card.	Go to 18.
18. Is there a dim vertical line on display monitor?	Check that P15 connector is plugged into J15 connector of shield. Replace 402254 high voltage and video assembly. Remove shield and check that 405844 cable assembly is connected to 405701 yoke assembly.	Go to 19.
19. Can characters be highlighted?	Display monitor is OK; trouble is elsewhere.	Replace 402254 high voltage and video assembly. Check continuity of 402236 video cable assembly: P901, terminals 5 and 8 to P304, terminals 5 and 8 respectively.

3. OPCON

ANALYSIS QUESTION	"YES" RESPONSE DIRECTIVE	"NO" RESPONSE DIRECTIVE
1. Do any keys generate characters on display monitor (on KD, KDP, or KDPM2 Sets in Keyboard Display mode)?	Go to 2.	Go to 12.
2. Do any keys repeat when depressed normally (not fully depressed on repeat keys)?	Check all keys for mechanical operation (see Question 6). Replace opcon.	Go to 3.
3. Do any repeat keys repeat when fully depressed (after a slight delay on some units)? Repeat keys on KD or KDP Sets: SPACE, period (.), underline (_), CHAR DLETE, CHAR INSRT, SCROL UP, SCROL DOWN and four cursor control keys -- ←, ↑, →, ↓.	Go to 4.	Another key may be stuck in the partially depressed condition. Check mechanical operation of that keyswitch, see Question 6. Check for proper orientation of control (top) row of blocking keytops, if present. REAR → ← FRONT Go to 4.
4. Does a single character appear on the screen or printer when power is first turned on?	Check mechanical operation of that keyswitch (see Question 6).	Go to 5.
5. Are any characters displayed when key is not depressed (ie, key touched, opcon vibrated or other keys depressed)?	Replace opcon.	Go to 6.

C. COMPONENT ANALYSIS (Contd)

3. OPCON (Contd)

ANALYSIS QUESTION	"YES" RESPONSE DIRECTIVE	"NO" RESPONSE DIRECTIVE
6. Do any keys fail to operate mechanically? Do all keys click when depressed and click again when released? Do repeat or TEST keys click when fully depressed and click again when released slightly? Does CAPS LOCK key lock down when depressed and release when depressed again (if present).	Check clearance between keyboard cover and keytops (adjust if necessary). Check space bar mechanism. Replace defective keyswitch.	Go to 7.
7. Do any keys fail to generate characters to the display monitor or printer?	Replace opcon if any group of keys fail to operate or more than one character is generated when one key is depressed. Go to 14 if only one key fails to operate.	Go to 8.
8. Do any indicators fail to light?	Go to 10.	Go to 9.
9. Does bell sound?	Go to 10.	
10. Does TST CLEAR lamp light while LINE FEED and Quote keys are fully depressed simultaneously and go out when LINE FEED and P keys are fully depressed simultaneously?	Go to 11.	Go to 13.
11. Does TST CLEAR lamp light when LINE FEED and [" ,] keys are fully depressed simultaneously? Replace opcon if TST CLEAR does not remain lit when keys are released.	Go to 14.	Check mechanical operation of [" ,] keyswitch (see Question 6). Replace opcon.

ANALYSIS QUESTION	"YES" RESPONSE DIRECTIVE	"NO" RESPONSE DIRECTIVE
12. Is +12 V dc (pin 7) and -12 V dc (pin 8) present with respect to frame ground (pin 9) on opcon plug (P1) on monitor cabinet?	Check connections from plug to filter card. Go to 13.	Proper voltage not being supplied to opcon. Check cable to opcon. Check +12 V and -12 V fuses in controller. Go to Page 4-5, 1. 40PSU103 POWER SUPPLY.
13. Depress the following keys while observing lamps for proper indication. Does each lamp respond as indicated?	Place in service.	Go to 16.

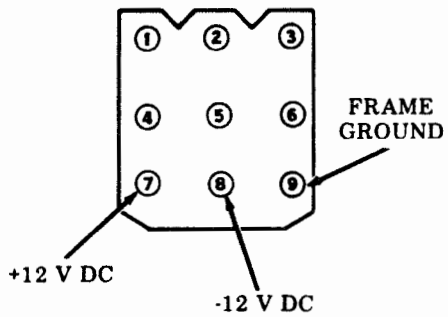

Depress Keys	Function	Lamp Condition
A	DISP LINE	ON
CONTROL and A (SOH)	DISP LINE	OFF
C	DISP LCL	ON
CONTROL and C (ETX)	DISP LCL	OFF
D	DISP SEND	ON
CONTROL and D (EOT)	DISP SEND	OFF
G	PTR LINE	ON
CONTROL and G (BEL)	PTR LINE	OFF
F	PTR LCL	ON
CONTROL and ACK	PTR LCL	OFF
E	SEND TAPE LINE	ON
CONTROL and E (ENQ)	SEND TAPE LINE	OFF
B	SEND TAPE LCL	ON
CONTROL and B (STX)	SEND TAPE LCL	OFF
J	REC. TAPE LINE	ON
NEW LINE	REC. TAPE LINE	OFF
O	REC. TAPE LCL	ON
CONTROL and O (SI)	REC. TAPE LCL	OFF

C. COMPONENT ANALYSIS (Contd)

3. OPCON (Contd)

ANALYSIS QUESTION	"YES" RESPONSE DIRECTIVE	"NO" RESPONSE DIRECTIVE
13. (Cont)		
N	MON. TAPE	ON
CONTROL and N (SO)	MON. TAPE	OFF
M	POLL/SEL (or S/R)	ON
RETURN	POLL/SEL (or S/R)	OFF
L	CNTRL MODE	ON
CONTROL and L (FF)	CNTRL MODE	OFF
K	FORM SEND	ON
CONTROL and K (VT)	FORM SEND	OFF
I	HIGH LIGHT	ON
TAB	HIGH LIGHT	OFF
H	FORM ENTER	ON
← (Cursor Left)	FORM ENTER	OFF
→ (Cursor Right)	DISP LCL	≥FLASH≤
CONTROL and C (ETX)	DISP LCL	OFF
CURSR RETRN	PTR LINE	≥FLASH≤
CONTROL and G (BEL)	PTR LINE	OFF
↓ (Cursor Down)	SEND TAPE LCL	≥FLASH≤
CONTROL and B (STX)	SEND TAPE LCL	OFF
CLEAR	REC. TAPE LINE	≥FLASH≤
NEW LINE	REC. TAPE LCL	OFF
LINE DLETE	POLL/SEL (or S/R)	≥FLASH≤
RETURN	POLL/SEL (or S/R)	OFF
LINE INSRT	FORM SEND	≥FLASH≤
CONTROL and L (FF)	FORM SEND	OFF
HOME	FORM ENTER	≥FLASH≤
← (Cursor Left)	FORM ENTER	OFF
Depress LINE FEED and ESC P keys simultaneously with additional force, and then release. TST CLEAR lamp extinguishes and returns opcon to normal operating mode.		
14. Does any failing key from Question 8 fail to light in TST mode (Question 13)?	Go to 15.	Refer to Page 4-95, 8. CONTROLLER.
15. Does any failing key from Question 7 check good in TST mode (Question 13)?	Refer to Page 4-95, 8. CONTROLLER.	Check for shorts between keyswitch terminals. Replace keyswitch. Replace opcon.

ANALYSIS QUESTION	"YES" RESPONSE DIRECTIVE	"NO" RESPONSE DIRECTIVE
16. Is +24 V dc present at pins 3 and 4 of indicator keyswitch when lamp should be lit? 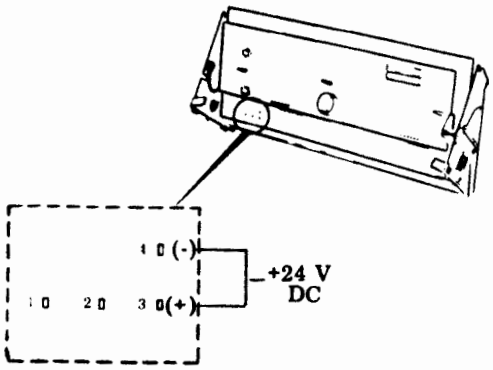 Terminal Side of Indicator Keyswitch	Replace indicator keyswitch.	Replace opcon.

NOTES

4. PRINTER -- GENERAL

The following cautions must be observed when troubleshooting the printer.

CAUTION 1: TURN OFF ALL POWER OR SIGNAL SOURCES BEFORE REMOVING OR REPLACING ANY COMPONENT.

CAUTION 2: TO AVOID POSSIBLE INTERNAL DAMAGE TO MOS CIRCUITRY WHENEVER THE 410071, 410072, 410076, 410640, OR 410729 PRINTER CIRCUIT CARD IS REMOVED, THE 346392 STATIC GROUND STRAP MUST BE WORN. THE STRAP IS NOT TO BE WORN OVER CLOTHING BUT MUST CONTACT THE SKIN TIGHTLY. THE GROUND STRAP MUST BE CONNECTED TO GROUND (EITHER "EARTH" GROUND OR FRAME GROUND) VIA ITS ASSOCIATED CLIP.

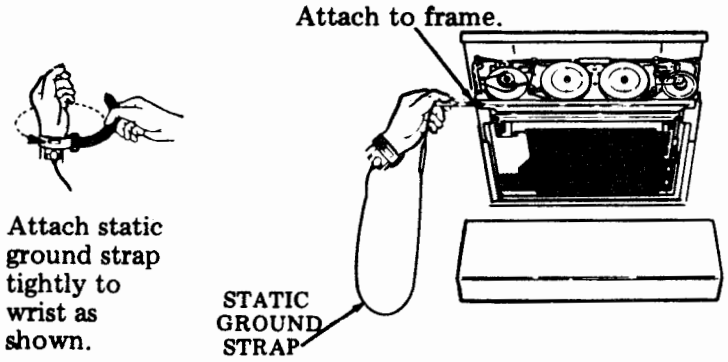

The following test apparatus is required to troubleshoot the printer. If it is not available, the recommended corrective procedure is replacement of the complete printer for all troubles which are not clearly evident and easily rectified.

80-Column Printer
*402617 Gauge
402779 Line Cord With Switch
402780 Interlock Strapping Plug (Friction Feed)
402781 AC Line Cord Adapter (Tractor Feed)
402782 Interlock Strapping Plug (Tractor Feed)
*402868 Gauge
*402878 Gauge
408646 Printer Test Assembly
408649 Test Cable
408650 Test Cable

132-Column Printer
*402716 Left Gauge
*402717 Right Gauge
402779 Line Cord With Switch
402781 AC Line Cord Adapter
402782 Interlock Strapping Plug
*402868 Gauge
*402878 Gauge
408646 Printer Test Assembly
408648 Test Cable

*These items used in adjustments of the printer.

C. COMPONENT ANALYSIS (Contd)

4. PRINTER – GENERAL (Contd)

When replacing the 410071, 410076, 410640 (80-column), 410072, or 410729 (132-column) printer circuit card, make sure the following procedures are followed:

a. Duplicate all options on the new card present on the old card.

NOTE: If replacing an early design 410640 or 410729 card with a late design 410076 or 410072 card, additional options on the late design card must be selected.

b. Perform the Power Supply Voltage adjustment before installing the new card.

c. Perform the Impeller Shaft Sensor and Flag Sensor adjustments after installing the new card.

d. Observe the grounding procedures.

When the type carrier is replaced, it may be necessary to refine the Impeller Shaft to Carrier Phasing (Final) adjustment.

Miscellaneous plugs and connectors are shown for the 80- and 132-column printers. Complete wiring information is available in WDP supplied with station.

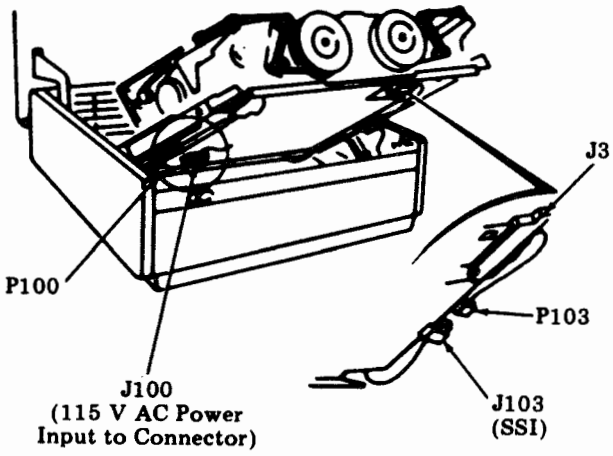

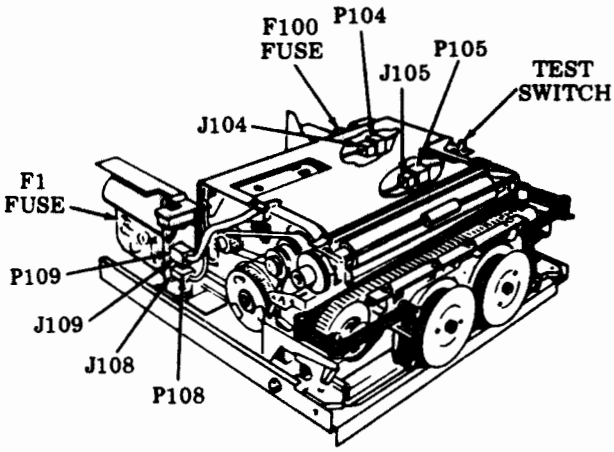

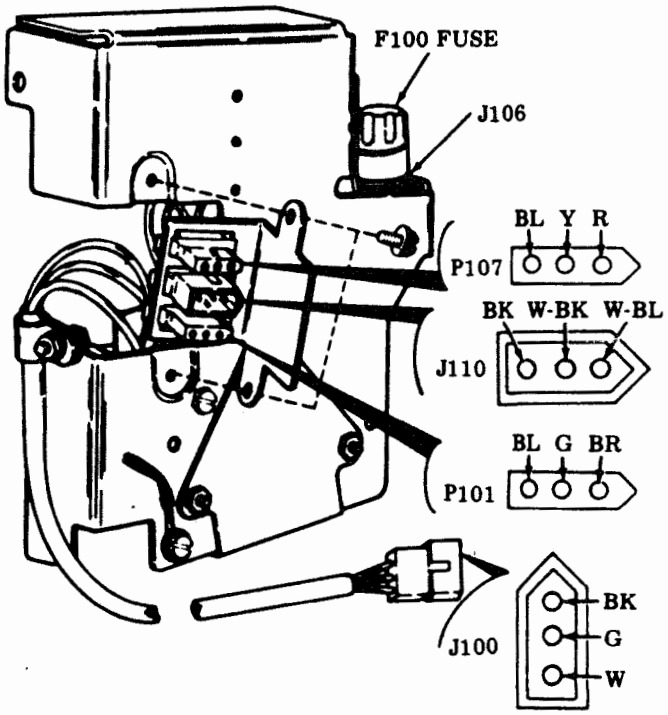

400960 (Intermediate Design) or
402632 (Late Design) AC Input
and Motor Control Assembly

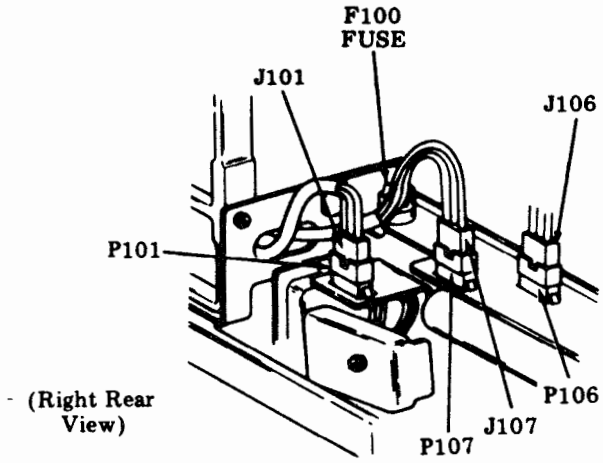

400905 (Early Design) AC Input
and Motor Control Assembly

80-Column Friction Feed

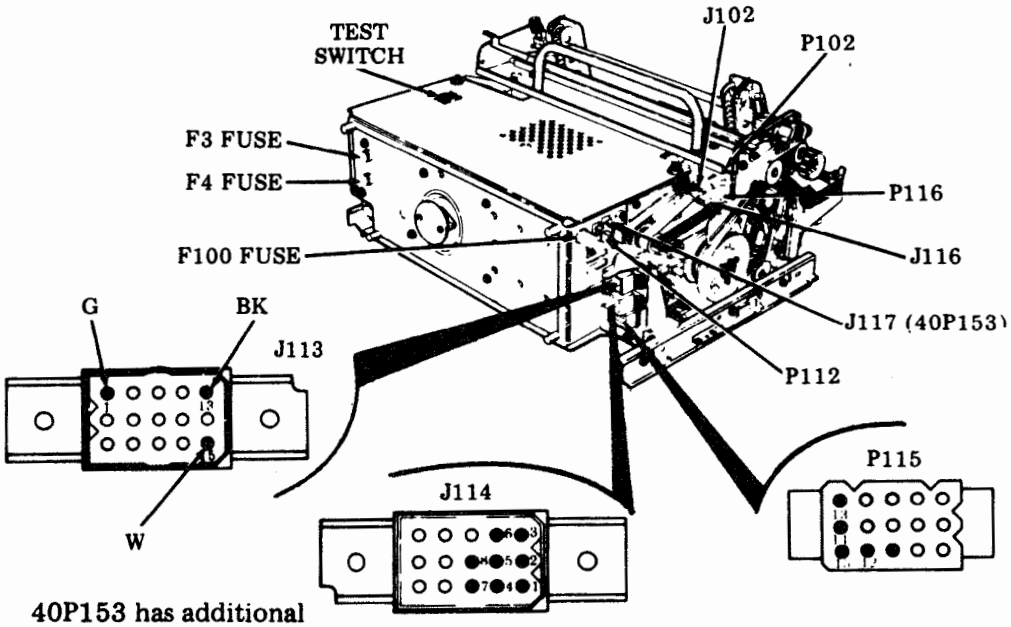

Note: 40P153 has additional wires at terminals 5, 6, 7, 8 and 9 of J113.

C. COMPONENT ANALYSIS (Contd)

4. PRINTER – GENERAL (Contd)

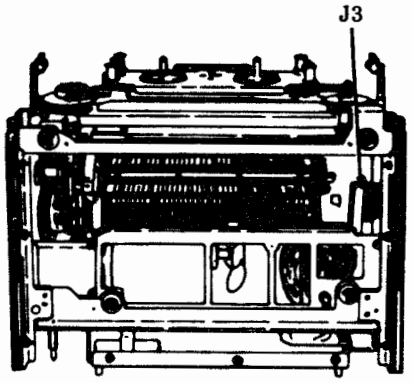

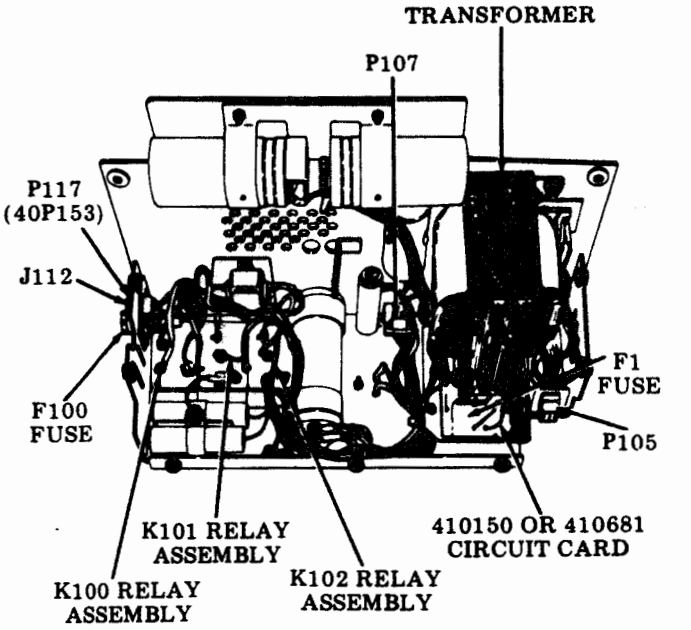

Early Design

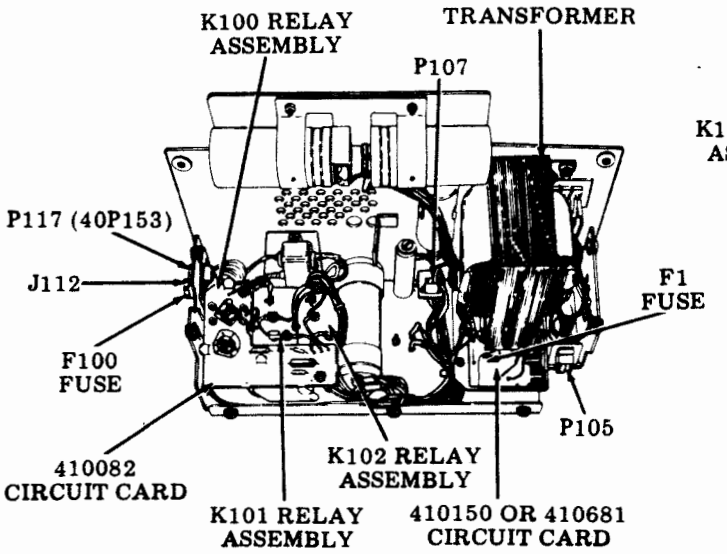

Late Design

80-Column Tractor Feed (40P151)

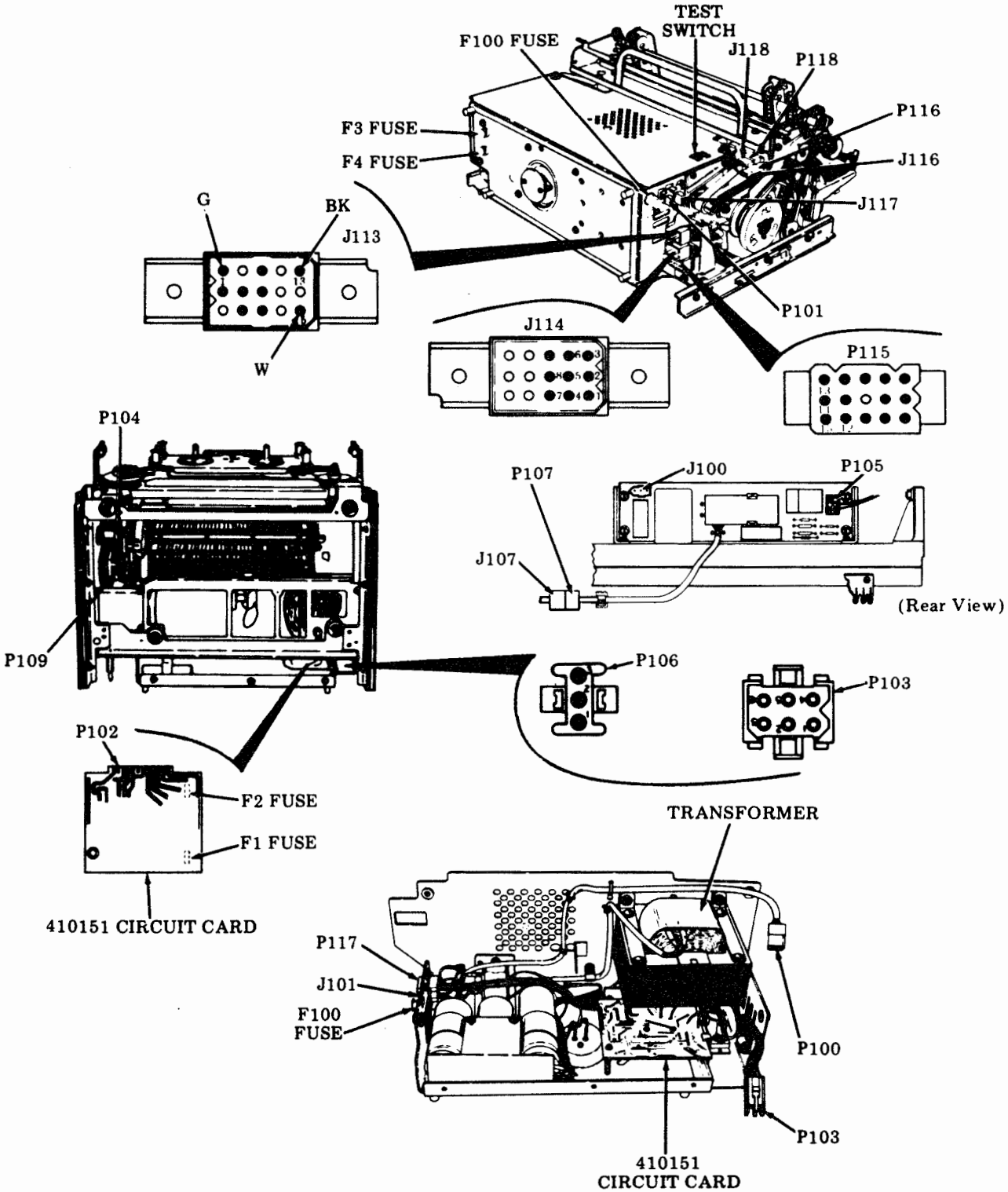

80-Column Tractor Feed (40P154)

C. COMPONENT ANALYSIS (Contd)

4. PRINTER -- GENERAL (Contd)

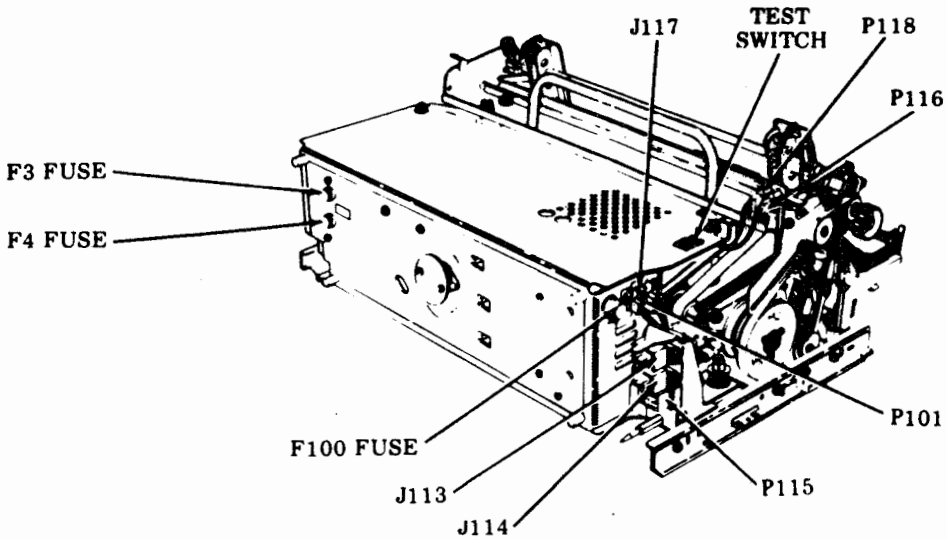

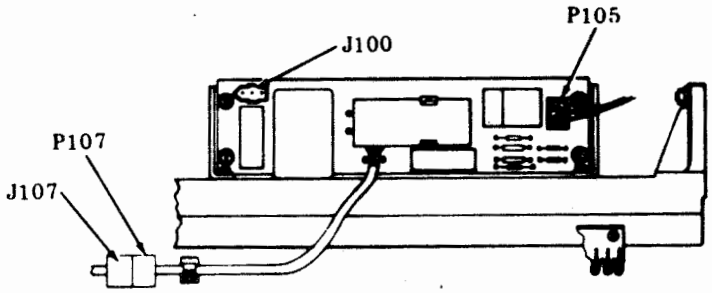

(Rear View)

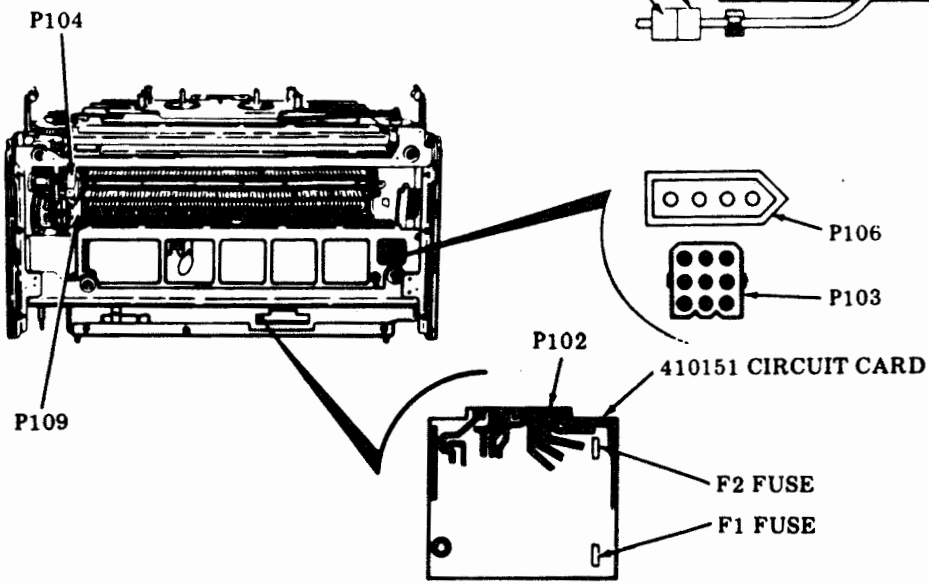

132-Column Tractor Feed

5. PRINTER -- 80-COLUMN FRICTION FEED

ANALYSIS QUESTION	"YES" RESPONSE DIRECTIVE	"NO" RESPONSE DIRECTIVE
1. Remove printer from cabinet. Connect 402779 line cord with switch to J100 connector on printer. Connect 402780 interlock strapping plug into P106 connector on printer. Set printer Test switch to Off. Set printer LF switch to position 1. Operate 402779 line cord with switch to On. Does printer motor run?	Go to 2.	Go to 3.
2. Operate 402779 line cord with switch to Off. Remove 410076 (or 410640) circuit card from printer. Operate 402779 line cord with switch to On. Does printer motor run?	Replace 400960 or 402632 ac input and motor control assembly. *Note:* Several motors and ac input and motor control assemblies have been used in friction feed printers. The motors and ac input and motor control assemblies are not interchangeable. See chart below. †Install 402618 modification kit to upgrade to intermediate design.	Replace 410076 (or 410640) circuit card. Before installing new 410076 (or 410640) circuit card, check voltages. Connect 408646 test assembly to J3 connector. *Caution: Observe caution label on 408649 cable when connecting plug to J3 connector.* Connect voltmeter leads between TP1 and TP3 on 408646 test assembly and place 402779 line cord with switch to On. Note meter reading and adjust for -24 V dc ±1% at R4 resistor on 410681 circuit card (early design) or R9 resistor on 410150 circuit card (late design).

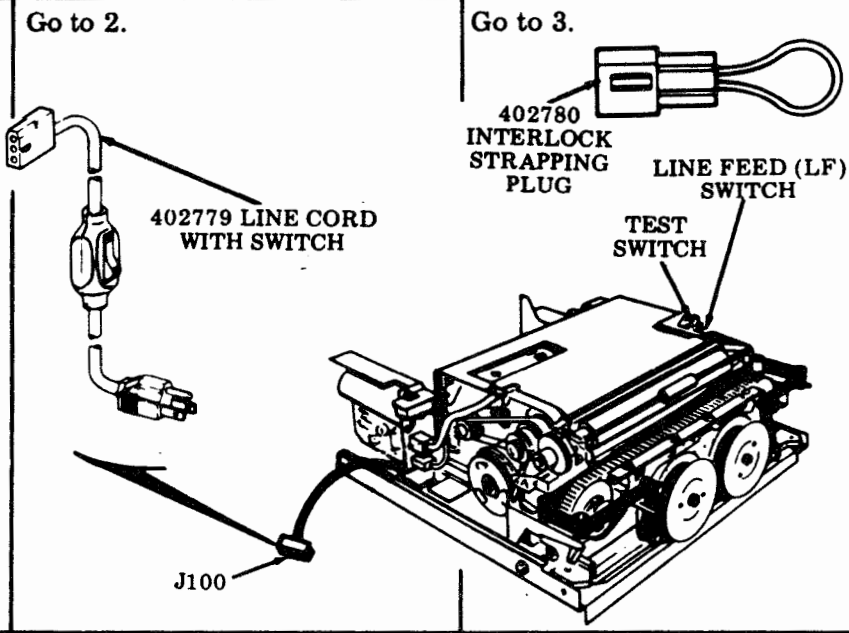

	AC INPUT AND MOTOR CONTROL ASSEMBLY	MOTOR
Early Design†	400905	400270
Intermediate Design	400960	400270
Late Design	402632	402402

C. COMPONENT ANALYSIS (Contd)

5. PRINTER -- 80 COLUMN FRICTION FEED (Contd)

ANALYSIS QUESTION	"YES" RESPONSE DIRECTIVE	"NO" RESPONSE DIRECTIVE
2. (Cont) 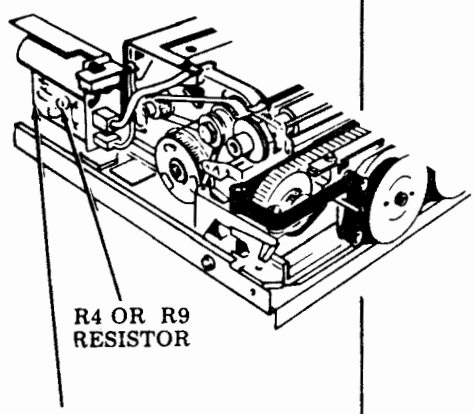 		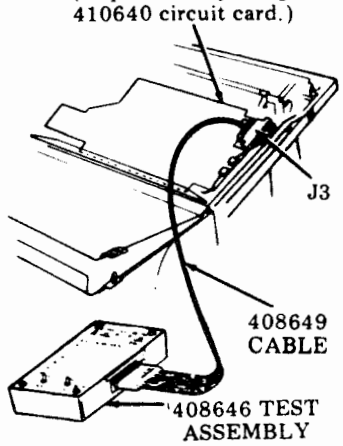 After installing new 410076 (or 410640) circuit card, check Impeller Shaft Sensor and Flag Sensor adjustments; remake if necessary.
3. Operate printer Test switch to On. Does printer motor run?	Go to 23.	Go to 4.
4. Operate 402779 line cord with switch to Off. Are motor gears and associated drive mechanisms free to operate (no mechanical binds)?	Check F100 fuse. If blown, replace with new F100 fuse (1 A SL-BL, MDL-1) (143306). If fuse blows again, go to 5. Check thermal overload protector on motor; depress reset button on fan end of motor. *Note:* The 400270 motor (early design) has overload protection which resets automatically upon cooling. Go to 10.	If mechanical bind is not clearly evident and easily rectified, install new printer. 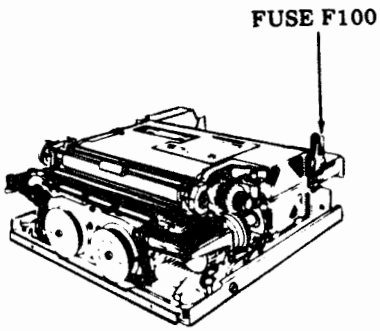

ANALYSIS QUESTION	"YES" RESPONSE DIRECTIVE	"NO" RESPONSE DIRECTIVE
4. (Cont) 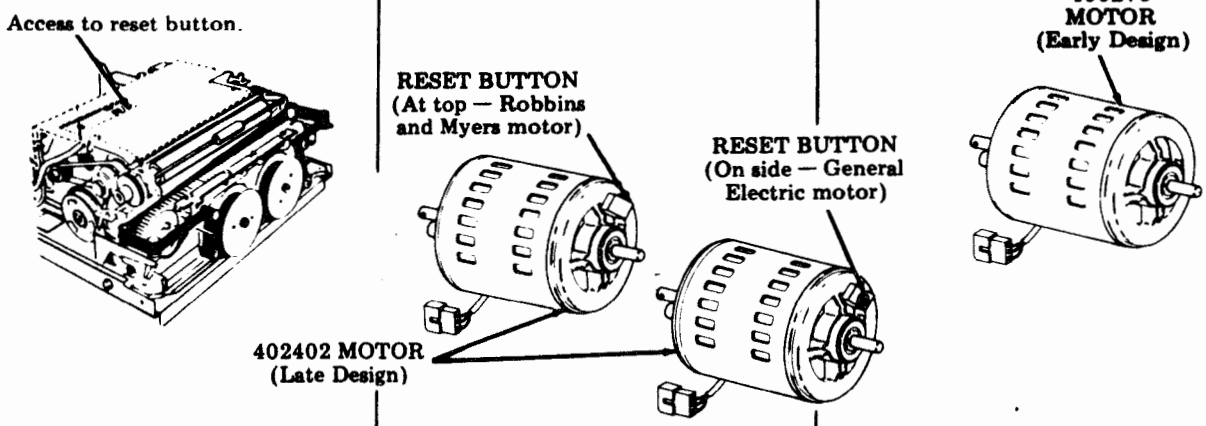 		
5. Disconnect J101 connector. Replace F100 fuse. Operate 402779 line cord with switch to On. Does F100 fuse blow?	Operate 402779 line cord with switch to Off. Remove 400960 or 402632 ac input and motor control assembly from printer. Locate short in ac input and motor control assembly. Reinstall assembly on printer.	Go to 6.
6. Reconnect J101 connector. Disconnect P108 connector. Replace F100 fuse. Operate 402779 line cord with switch to On. Does F100 fuse blow?	Operate 402779 line cord with switch to Off. Locate and clear short circuit in transformer cabling. Check if transformer is shorted to ground — if so, install new 400901 transformer.	Go to 7.

C. COMPONENT ANALYSIS (Contd)

5. PRINTER – 80-COLUMN FRICTION FEED (Contd)

ANALYSIS QUESTION	"YES" RESPONSE DIRECTIVE	"NO" RESPONSE DIRECTIVE
7. Reconnect P108 connector. Disconnect J109 connector. Replace F100 fuse. Operate 402779 line cord with switch to On. Does F100 fuse blow?	Operate 402779 line cord with switch to Off. Replace 410150 circuit card. When new 410150 circuit card is installed, check and refine (if necessary) Power Supply Voltage adjustment. If trouble is not corrected, replace 400908 power supply assembly.	Go to 8. 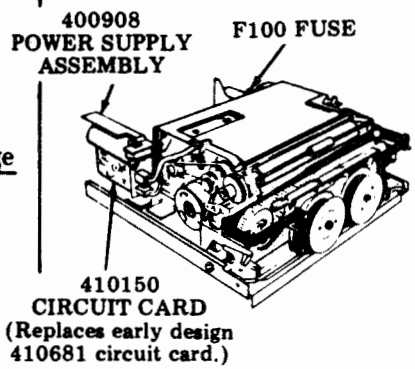
8. Reconnect J109 connector. Disconnect J105 connector. Replace F100 fuse. Operate 402779 line cord with switch to On. Does F100 fuse blow?	Operate 402779 line cord with switch to Off. Replace 400903 top cover assembly. 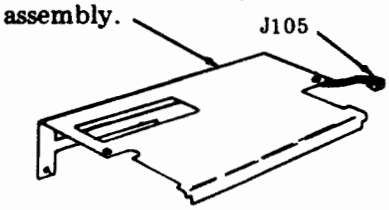 	Go to 9.
9. Reconnect J105 connector. Replace F100 fuse. Remove 410076 (or 410640) circuit card. Operate 402779 line cord with switch to On. Does F100 fuse blow?	Replace entire printer.	Replace 410076 (or 410640) circuit card. Before installing new 410076 (or 410640) circuit card, check Power Supply Voltage adjustment. After installing new 410076 (or 410640) circuit card, check Impeller Shaft Sensor and Flag Sensor adjustments; remake if necessary.

ANALYSIS QUESTION	"YES" RESPONSE DIRECTIVE	"NO" RESPONSE DIRECTIVE
10. Remove 410076 (or 410640) circuit card. Connect 408646 test assembly to J3 connector on printer. *Caution: Observe caution label on 408649 cable when connecting plug to J3 connector.* Operate 402779 line cord with switch to On. Operate MTR switch on 408646 test assembly to On. Does printer motor run?	Operate 402779 line cord with switch to Off. Replace 410076 (or 410640) circuit card. Before installing new 410076 (or 410640) circuit card, check Power Supply Voltage adjustment. After installing 410076 (or 410640) circuit card, check Impeller Shaft Sensor and Flag Sensor adjustments; remake if necessary.	Go to 11. 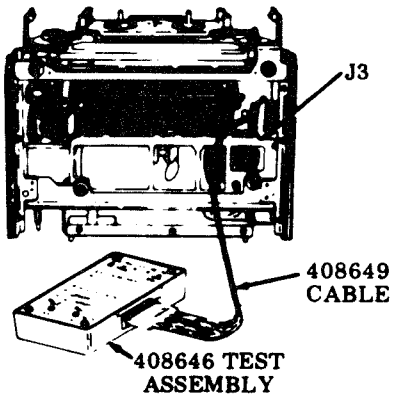
11. Check for -24 V dc ±1% at TP1 and TP3 on 408646 test assembly. Is -24 V dc present?	Go to 12. 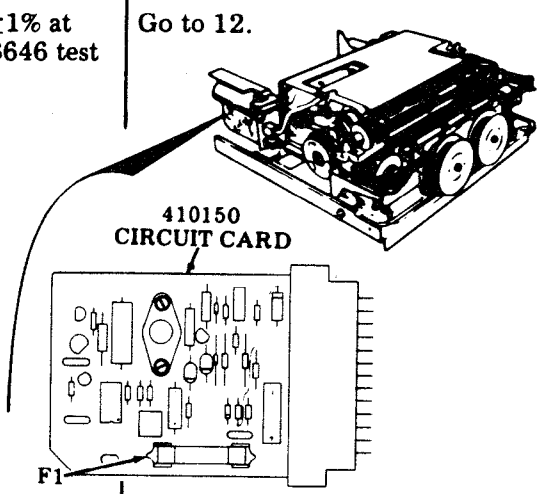 	Check F1 fuse on 410150 circuit card. *Note:* The 410681 circuit card is the early design version of 410150 circuit card. The 410681 circuit card does not have a fuse. If fuse is blown, replace with new 321955 fuse (2-1/2 A F-B). If fuse is not blown, replace 410150 circuit card. Check and refine Power Supply Voltage adjustment (if necessary). Go to 13.
12. 40P101 Only Measure -5 V dc at TP5 and TP3 on 408646 test assembly. Is -5 V dc present? *Note:* Step 12 does not apply to 40P102.	Go to 18.	Replace 410150 (late design) or 410681 (early design) circuit card. Check and refine Power Supply Voltage adjustment (if necessary). Replace 400903 cover assembly. Replace entire printer.

C. COMPONENT ANALYSIS (Contd)

5. PRINTER – 80-COLUMN FRICTION FEED (Contd)

ANALYSIS QUESTION	"YES" RESPONSE DIRECTIVE	"NO" RESPONSE DIRECTIVE
13. Disconnect J101 connector on 400960 or 402632 ac input and motor control assembly. Measure 115 V ac ±10% on P101 connector, terminal 1 to 3. Is 115 V ac present?	Reconnect J101 connector. Go to 14.	Check F100 fuse. If blown, replace with new F100 fuse (1 A SL-BL MDL-1) (143306). If F100 fuse is not blown, replace 400960 or 402632 ac input and motor control assembly. *Note:* Several motors and ac input and motor control assemblies have been used in friction feed printers. The motors and ac input and motor control assemblies are not interchangeable. See chart below. †Install 402618 modification kit to upgrade to intermediate design.
14. Disconnect P108 connector on 400908 power supply. Measure 28 V ac ±3% on P108 connector, terminal 1 to 3. Is 28 V ac present?	Reconnect P108 connector. Go to 15.	Replace 400901 transformer.

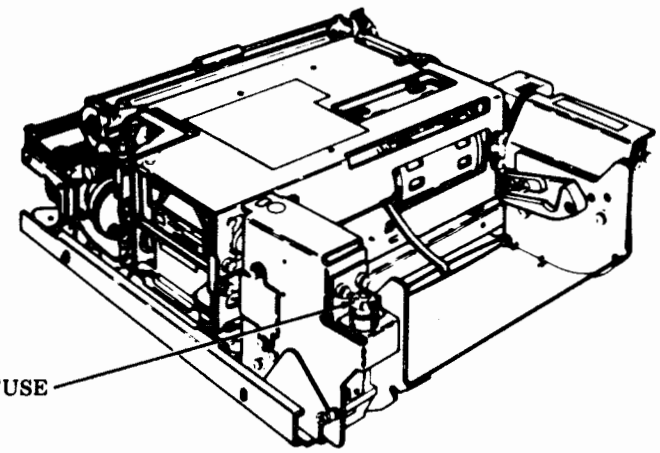

	AC INPUT AND MOTOR CONTROL ASSEMBLY	MOTOR
Early Design†	400905	400270
Intermediate Design	400960	400270
Late Design	402632	402402

ANALYSIS QUESTION	"YES" RESPONSE DIRECTIVE	"NO" RESPONSE DIRECTIVE
15. Disconnect J109 connector on 400908 power supply. Measure -24 V dc±1% (two places) on P109 connector, terminal 5 to 6 and terminal 4 to 5. *Note:* Place (+) probe on terminal 5. Is -24 V dc present?	Reconnect J109 connector. Go to 16.	If voltage is present but not -24 V dc±1%, refine adjustment — R4 resistor on 410681 circuit card (early design); R9 resistor on 410150 circuit card (late design). Replace 400908 power supply.

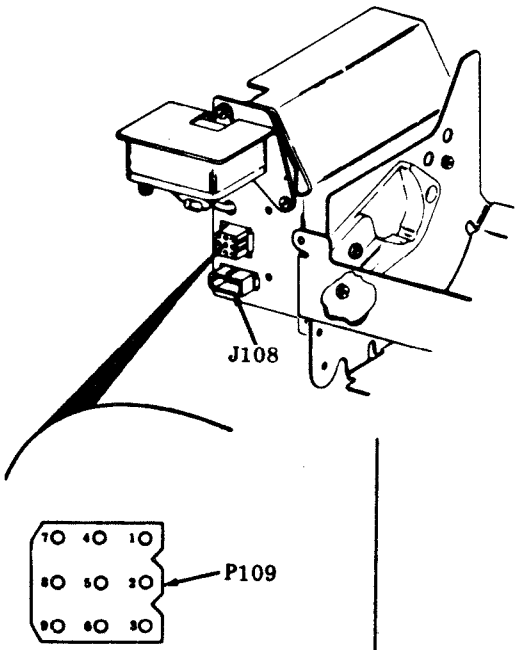

410681 CIRCUIT CARD
(Early Design)

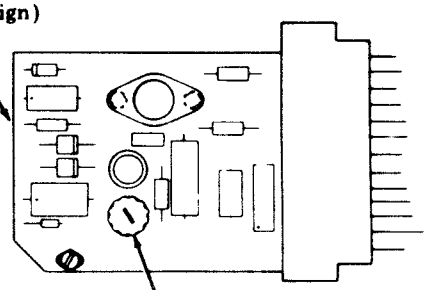

410150 CIRCUIT CARD
(Late Design)

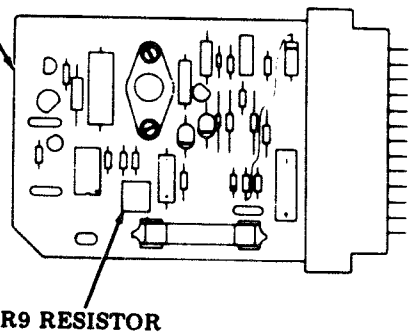

C. COMPONENT ANALYSIS (Contd)

5. PRINTER – 80 COLUMN FRICTION FEED (Contd)

ANALYSIS QUESTION	"YES" RESPONSE DIRECTIVE	"NO" RESPONSE DIRECTIVE
16. Remove 400903 top cover assembly (40P101) or 407209 top cover assembly (40P102) mounting screws. Disconnect J105 connector on 400903 or 407209 top cover assembly. Measure -24 V dc±1% (two places) on J105 connector, terminal 1 to 2 and terminal 2 to 3. *Note:* Place (+) probe on terminal 2. Is -24 V dc present (two places)?	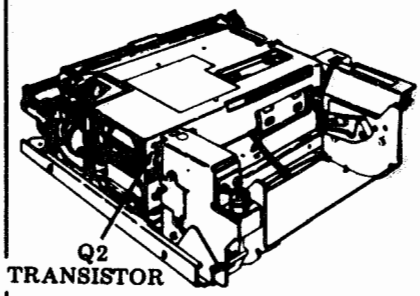 Check continuity from P105 connector to J3 connector. P105 — J3 4 ⟷ L 1 ⟷ 9 2 ⟷ N 3 ⟷ 12 If no continuity repair broken cable. Reconnect J105 connector. Go to 17.	Replace Q2 transistor (318835) on 400903 or 407209 top cover assembly. Replace 400903 or 407209 top cover assembly. *Note:* When replacing Q2 transistor, apply thermal joint compound to base of transistor and base of 177113 insulator. 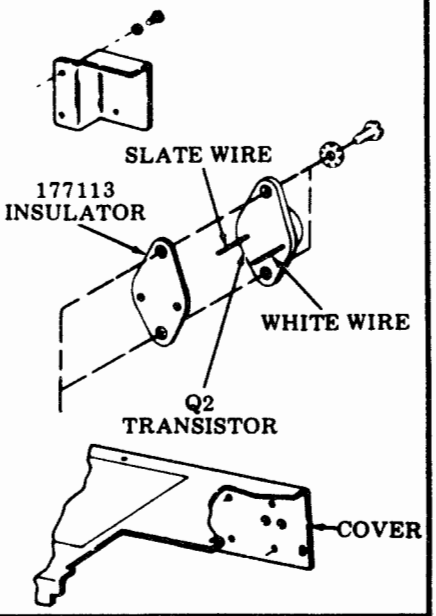
17. Disconnect interlock plug from P106 connector. Check for -24 V dc at terminals 1 and 2 on P106 connector. Is -24 V dc present? *Note:* Place (+) probe on terminal 1.	Reconnect interlock plug. Go to 18.	Remove mounting screws and swing connector bracket outward to expose connector. Check continuity from P106 connector to J110 connector. P106 — J110 1 ⟷ 3 2 ⟷ 2 If no continuity repair broken cable.

ANALYSIS QUESTION	"YES" RESPONSE DIRECTIVE	"NO" RESPONSE DIRECTIVE
18. Operate 402779 line cord with switch on. Place printer Test switch to On. Does TEST lamp on 408646 test assembly light?	If printer has 400960 (intermediate design) or 402632 (late design) ac input and motor control assembly, go to 19. If printer has 400905 (early design) ac input and motor control assembly, go to 21.	Check wiring back to Test switch. Replace 402861 Test switch.
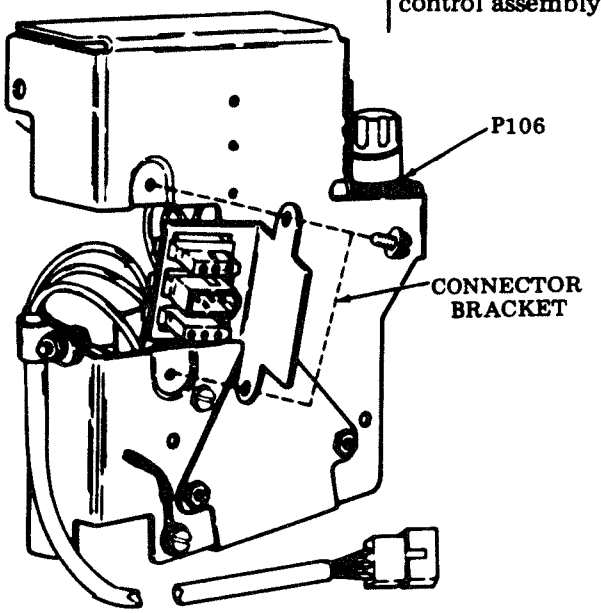 400960 (Intermediate Design) or 402632 (Late Design) AC Input and Motor Control Assembly		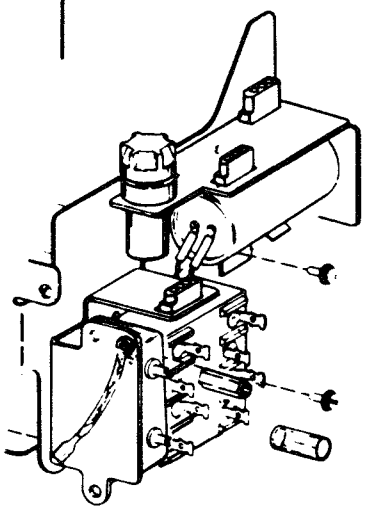 400905 (Early Design) AC Input and Motor Control Assembly
19. Remove 400960 or 402632 ac input and motor control assembly mounting screws and swing assembly outward to expose relay terminals. Operate 402779 line cord with switch to On. Operate MTR switch on 408646 test assembly to On. Measure 115 V ac±10% between K100 relay, terminal 4 and TP3 on 408646 test assembly. Is 115 V ac present?	Go to 20.	Replace K101 relay (178306). 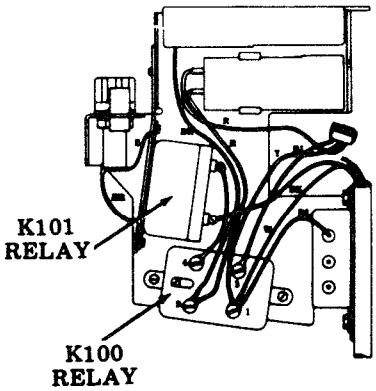

C. COMPONENT ANALYSIS (Contd)

5. PRINTER – 80 COLUMN FRICTION FEED (Contd)

ANALYSIS QUESTION	"YES" RESPONSE DIRECTIVE	"NO" RESPONSE DIRECTIVE
20. Measure 115 V ac ± 10% between K100 relay, terminal 3 and TP3 on 408646 test assembly. Is 115 V ac present?	Replace 400960 or 402632 ac input and motor control assembly. Go to 22.	Replace K100 relay (402423 in 402632 assembly; 400968 in 400960 assembly).
21. Remove relay cover. Operate 402779 line cord with switch to On. Operate MTR switch on 408646 test assembly to On. Measure -24 V dc ± 1% on solid state relay from terminal 2 to 4 and 115 V ac ± 10% from terminal 1 to 8. Are -24 V dc and 115 V ac voltages present?	Go to 22. 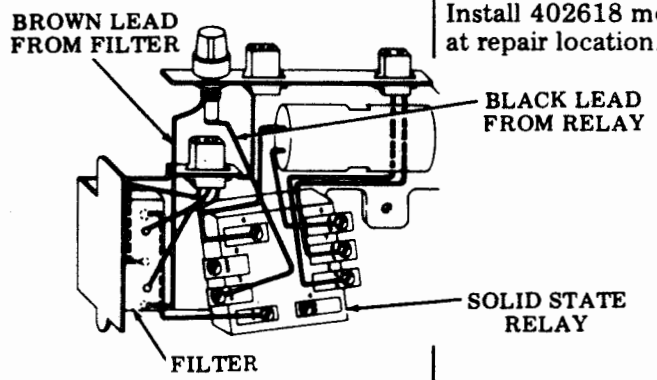 	Replace entire printer. Install 402618 modification kit at repair location.
22. Operate 402779 line cord with switch to Off. Disconnect J107 connector. Measure the following resistances between indicated terminals on J107 connector: 400270 Motor (Early design) or 402402 Motor (Late design) General Electric Terminal 1 to 2 — 33 ohms Terminal 1 to 3 — 45 ohms Terminal 2 to 3 — 12 ohms (All readings±10%) 402402 Motor (Late design) — Robbins & Myers Terminal 1 to 2 — 19 ohms Terminal 1 to 3 — 30 ohms Terminal 2 to 3 — 11 ohms (All readings±10%) Are measured resistances correct?	Replace entire printer. 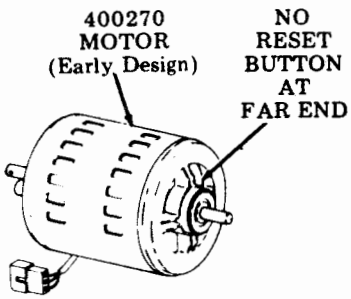 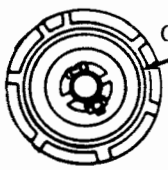 (Left Side View) 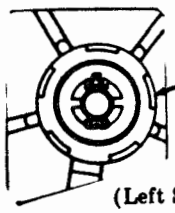 (Left Side View)	Replace 402402 motor. *Note:* Several motors and ac input and motor control assemblies have been used in friction feed printers. The motors and ac input and motor control assemblies are not interchangeable. See chart below: AC INPUT AND MOTOR CONTROL ASSEMBLY / MOTOR Early Design † — 400905 / 400270 Intermediate Design — 400960 / 400270 Late Design — 402632 / 402402 † Install 402618 modification kit to upgrade to intermediate design.

ANALYSIS QUESTION	"YES" RESPONSE DIRECTIVE	"NO" RESPONSE DIRECTIVE
23. Is the impeller shaft being driven?	Go to 24.	Check the impeller shaft drive belt. Replace if worn or broken (400631). Check the motor shaft sprocket. Replace if worn or broken (400280).
24. Does printer line feed properly with printer Test switch On? Failure symptoms are: No line feed Intermittent line feed Continuous line feed.	Go to 28.	Check line feed belts. Replace if worn or broken (400634 or 400632). Check line feed pawls for engagement with gear. Check line feed bail spring. Replace if broken or worn. Check loose mounting of line feed magnet assembly on its core. Replace 400470 line feed assembly if magnet coil is loose. Go to 25.

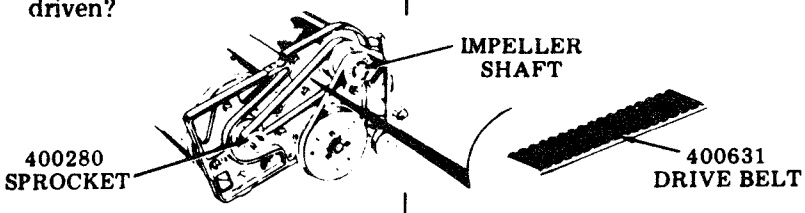

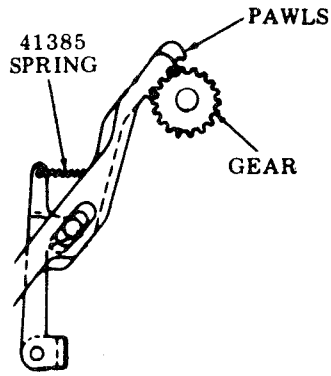

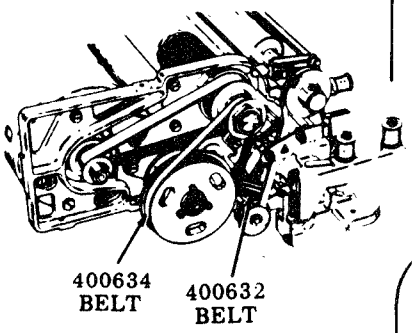

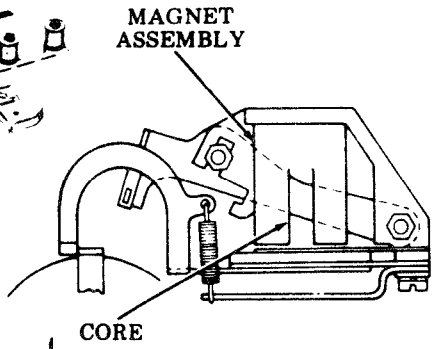

C. COMPONENT ANALYSIS (Contd)

5. PRINTER – 80 COLUMN FRICTION FEED (Contd)

ANALYSIS QUESTION	"YES" RESPONSE DIRECTIVE	"NO" RESPONSE DIRECTIVE
25. Remove 410076 (or 410640) circuit card. Connect 408646 test assembly to J3, as shown. *Caution: Observe caution label on 408649 cable when connecting plug to J3.* Operate 402779 line cord with switch to On. Operate MTR switch on 408646 test assembly to On. Operate LF switch on 408646 test assembly to On. Does the printer line feed?	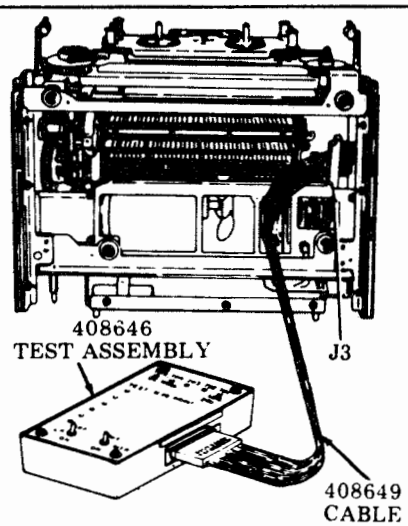 Operate 402779 line cord with switch Off. Replace 410076 (or 410640) circuit card. After the card is installed, check the Impeller Shaft Sensor and Flag Sensor adjustment, remake if necessary.	Go to 26.
26. Check for -24 V dc ± 1% between TP2 and TP3 on 408646 test assembly. Is -24 V dc ± 1% present?	Go to 27.	Refine -24 V dc adjustment if voltage reading is outside tolerances. 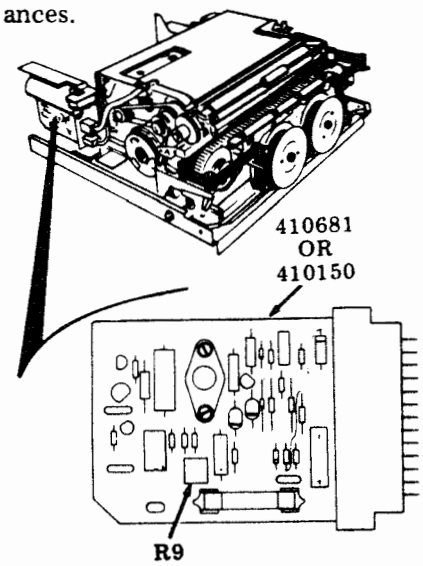 Replace 410150 circuit card.

ANALYSIS QUESTION	"YES" RESPONSE DIRECTIVE	"NO" RESPONSE DIRECTIVE
27. Operate the 402779 line cord with switch Off. Disconnect P-3 test cable from printer. Measure for 33 ohms resistance at J3 between terminals 1 and K. Is measured resistance correct?	Check the following adjustments: Clutch Shoe Release Arm Line Feed Armature Gap Line Feed Bar Eccentric and Drive Belt Tension Clutch Drive Belt Tension Replace front casting assembly: 40P101 — 400201 (early design) or 400377 (late design) 40P102 — 402970	Replace 400470 line feed magnet assembly. 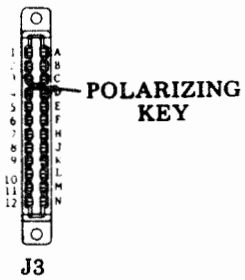
28. Place printer LF1 — LF2 switch to position LF2. Does the printer double line space properly?	Go to 30.	Go to 29.
29. Remove 410076 (or 410640) circuit card from printer. Connect 408646 test assembly to J3, as shown. *Caution: Observe caution label on 408649 cable when connecting plug to J3 connector.* Operate 402779 line cord with switch On. Does the line feed lamp on 408646 test assembly light?	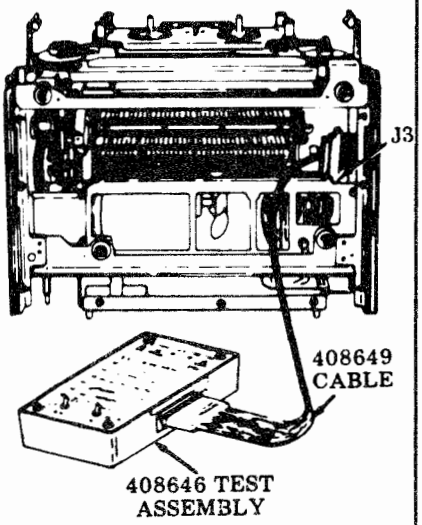 Replace 410076 (or 410640) circuit card. After the card is installed, check the Impeller Shaft Sensor and Flag Sensor adjustment; remake if necessary.	Replace 402861 switch. 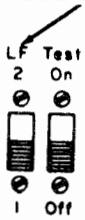

C. COMPONENT ANALYSIS (Contd)

5. PRINTER -- 80 COLUMN FRICTION FEED (Contd)

ANALYSIS QUESTION	"YES" RESPONSE DIRECTIVE	"NO" RESPONSE DIRECTIVE
30. Is the ribbon feed mechanism operating properly? Ribbon spools rotating. Ribbon reverse working. No ribbon foldover. *Note:* To check ribbon reversing, manually operate the reversing arms with printer operating (printer Test switch On).	Go to 31.	Check ribbon drive belt. Replace if worn or broken. 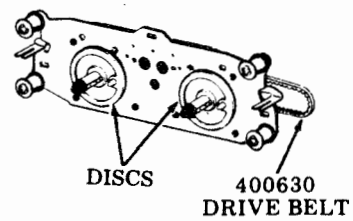 Remove ribbon mechanism and check the following springs. Replace if broken. 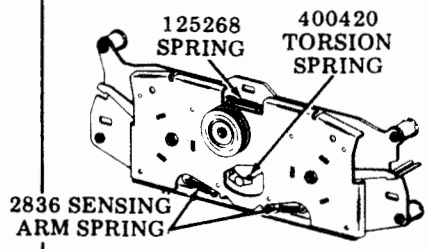 Replace ribbon mechanism 402420.
31. Are any characters being printed? 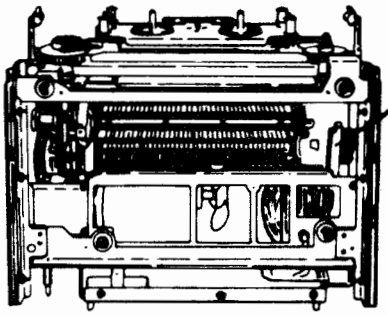 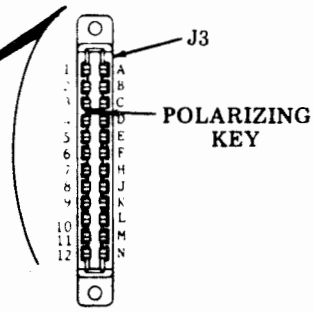 	Go to 32.	Check the following adjustments: (1) Impeller Shaft Sensor Gap (2) Flag Sensor Gap Check impeller sensor for a maximum of 145 ohms at J3 between terminals H and J. Check flag sensor for a maximum of 145 ohms at J3 between terminals E and F. Replace sensor (400615) if open or resistance exceeds maximum requirement. Replace 410076 (or 410640) circuit card. After the card is installed, check the Impeller Shaft Sensor and Flag Sensor adjustment; remake if necessary.

ANALYSIS QUESTION	"YES" RESPONSE DIRECTIVE	"NO" RESPONSE DIRECTIVE
32. Is the carrier font symbol the symbol printed? Font symbols: Up-Low Monocase etc.	Go to 33.	If ! (exclamation) or ___ (underline) are printed check the following adjustments: (1) Flag Sensor Gap (2) Impeller Shaft Sensor Gap (3) Flag Sensor Final Replace the 410076 (or 410640) circuit card. After the card is installed, check the Impeller Shaft Sensor and Flag Sensor adjustment; remake if necessary.
33. Are any columns not printing?	Go to 34.	Go to 38.
34. Are any of the following groups of columns missing? 1 — 12 13 — 24 25 — 36 37 — 48 49 — 60 61 — 72 73 — 80	Replace 410076 (or 410640) circuit card. After the card is installed, check the Impeller Shaft Sensor and Flag Sensor adjustment; remake if necessary.	Go to 35.
35. Of the columns that are missing, are they all odd-numbered (example: 1, 3, 19, 71) or are they all even-numbered (example: 2, 8, 42, 68)?	Check the position of the antifreeze strip. Check for oil on antifreeze strip. If present, spray with 337449 Degreaser (Freon TF). ODD EVEN ANTIFREEZE STRIP (Clear Plastic Strip) If antifreeze strip is distorted or missing, replace entire printer.	Go to 36.

C. COMPONENT ANALYSIS (Contd)

5. PRINTER -- 80 COLUMN FRICTION FEED (Contd)

ANALYSIS QUESTION	"YES" RESPONSE DIRECTIVE	"NO" RESPONSE DIRECTIVE
36. Are one or more columns missing?	Check the following adjustments: (1) Impeller Shaft Sensor Gap (2) Flag Sensor Gap (3) Impeller Shaft Sensor (Final) Replace 410076 (or 410640) circuit card. After the circuit card is installed, check the Impeller Shaft Sensor and Flag Sensor adjustments; remake if necessary. Replace entire printer.	Go to 37.
37. Are any characters not printed?	Check type carrier for missing pallets. Replace type carrier. Replace 410076 (or 410640) circuit card. After the circuit card is installed, check the Impeller Shaft Sensor and Flag Sensor adjustments; remake if necessary.	Place printer in service.
38. Is the font symbol clipped on the left or right?	Check the Impeller Shaft to Carrier Phasing — Final adjustment.	Go to 39.

ANALYSIS QUESTION	"YES" RESPONSE DIRECTIVE	"NO" RESPONSE DIRECTIVE
39. Are adjacent characters in the type carrier printed in place of the proper character (T instead of S, B instead of A, etc)?	Check the following adjustments: (1) Flag Sensor Gap (2) Impeller Shaft Sensor Gap Check that pallets and flags are in proper position. Type Carrier — Flag Position 400645AA — 43, 107, 171 400629AB — 12, 108 400774AC — 44, 108, 172 400775AD — 108, 172 400776AF — 12, 108 400778AH — 44, 108, 172 400779AP — 12, 108 400784AN — 12, 108 400785AQ — 43, 107, 171 408346AZ — 12, 60, 108, 156 Replace entire printer.	Go to 40.
40. Is copy free of horizontal ink smudges caused by the ribbon rubbing against the paper.	Go to 41.	Check the following adjustments: (1) Ribbon Guide (2) Paper Positioner
41. Is copy free of double print or ghost images? 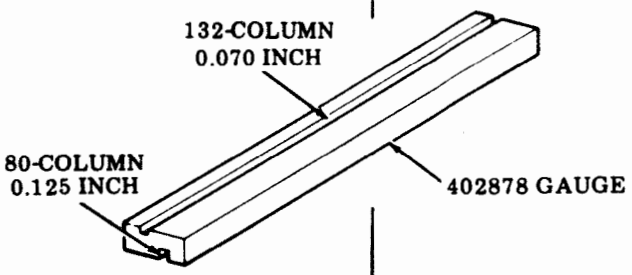 	Go to 42.	Check the following adjustments: (1) Left Carrier Sprocket (2) Right Carrier Sprocket Check that type pallets are seated properly in carrier. Seat pallets with 402878 gauge. Replace type carrier. Replace entire printer.

C. COMPONENT ANALYSIS (Contd)

5. PRINTER – 80 COLUMN FRICTION FEED (Contd)

ANALYSIS QUESTION	"YES" RESPONSE DIRECTIVE	"NO" RESPONSE DIRECTIVE
42. Is the printed copy clear and easily readable?	Go to 43.	Replace 402444 ribbon. Check the following adjustments: (1) Backup Bar (Final) (2) Left Carrier Sprocket (3) Right Carrier Sprocket (4) Ribbon Guide (5) Paper Positioner
43. Is printed copy free from embossing (especially noticeable on characters such as hyphen or underline)?	Go to 44.	Check the Backup Bar (Final) adjustment and type carrier pallet alignment.
	400645AA Friction and Tractor 80-Column — Monocase 400629AB Friction and Tractor 80-Column — Up-Low 400774AC Friction and Tractor 80-Column — Weather 400775AD Friction and Tractor 80-Column — Line Drawing 400776AF Friction and Tractor 80-Column — Fractions in One Eighths — Up-Low 400778AH Friction and Tractor 80-Column — Large Gothic With Fractions 400779AP Friction and Tractor 80-Column — Fractions in One Eighths — Up-Low 400784AN Friction and Tractor 80-Column — EBCDIC 400785AQ Friction and Tractor 80-Column — EBCDIC Monocase 408346AZ Friction and Tractor 80-Column — 48-Character Set	
		Check that type pallets are seated properly in carrier. Seat pallets with 402878 gauge. Replace type carrier.
44. Is the print density uniform throughout the line without gradual variations?	Go to 45.	Check the following adjustments: (1) Left Carrier Sprocket (2) Right Carrier Sprocket (3) Backup Bar
45. Is the print density uniform throughout the line without random variations?	Go to 46.	Check the following adjustment: Paper Positioner Replace entire printer.

ANALYSIS QUESTION	"YES" RESPONSE DIRECTIVE	"NO" RESPONSE DIRECTIVE
46. Are the bottoms of characters printed clearly (not light) at both ends of the line?	Go to 47.	Check the following adjustments: (1) Left Carrier Sprocket (2) Right Carrier Sprocket Replace printer.
47. Are all individual characters printed clearly when received?	Go to 48.	Check type carrier for missing, broken, distorted, or dirty type pallets. Replace type carrier. Replace printer.
48. Are there erratic line feeds or some characters printing too high? 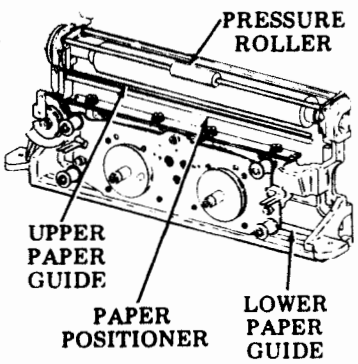 	Friction Feed: Check for bind in paper roll and throughout paper routing path. Check tension of pressure roller. Check for damaged paper guides and paper positioner. Check for damaged spindle. Check that core of paper roll is not damaged, and is not protruding on either side. Replace front casting assembly: 40P101 — 400201 (early design) or 400377 (late design) 40P102 — 402970	Go to 49.
49. Does the paper feed out when the paper advance pushbutton is operated? (Printer in cabinet and SSI connected.)	Go to 51.	Go to 50.

C. COMPONENT ANALYSIS (Contd)

5. PRINTER -- 80 COLUMN FRICTION FEED (Contd)

ANALYSIS QUESTION	"YES" RESPONSE DIRECTIVE	"NO" RESPONSE DIRECTIVE
50. Operate 402779 line cord with switch to Off. Remove 410076 (or 410640) circuit card from printer. Connect 408646 test assembly as shown. *Caution: Observe caution label on 408649 cable when connecting plug to J3 connector.* Operate 402779 line cord with switch On. Depress paper advance push-button on printer. Does the paper advance lamp on the 408646 test assembly light?	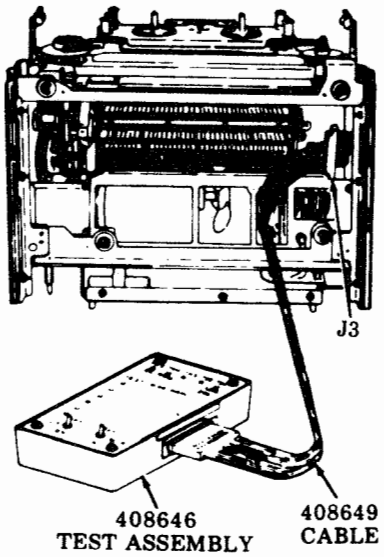 Replace 410076 (or 410640) circuit card.	Replace 402631 switch.
51. Does the low paper indicator light when paper roll is momentarily lifted?	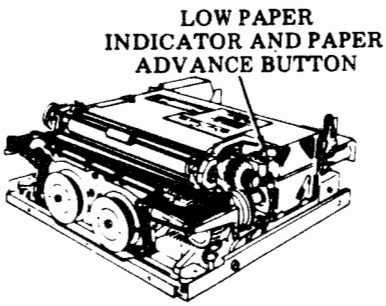 Place printer in service.	Check the low paper switch adjustment. Go to 52.

ANALYSIS QUESTION	"YES" RESPONSE DIRECTIVE	"NO" RESPONSE DIRECTIVE
52. Operate 402779 line cord with switch Off. Remove 410076 (or 410640) circuit card from printer. Connect 408646 test assembly to J3 , as shown. *Caution: Observe caution label on 408649 cable when connecting plug to J3.* Operate the 402779 line cord with switch On. Does the FORMS SUPPLY lamp on the 408646 test assembly light (paper in)? Remove paper. Does the FORMS SUPPLY lamp go out and the ALARM lamp light (paper out)?	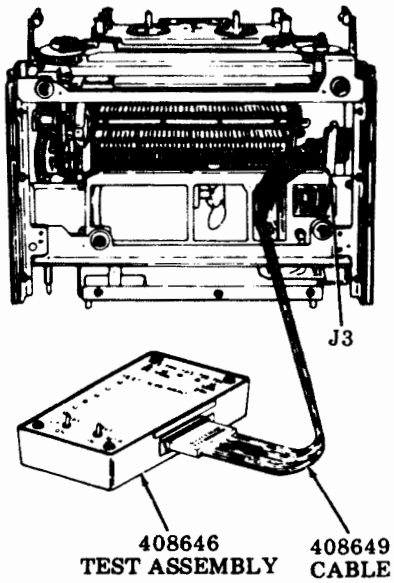 Replace 410076 (or 410640) circuit card. After the circuit card is installed, check the Impeller Shaft Sensor and Flag Sensor adjustments; remake if necessary.	Replace 402427 bulb. 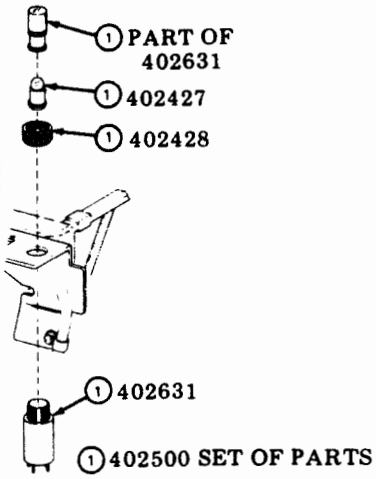 Replace 400565 low paper switch. 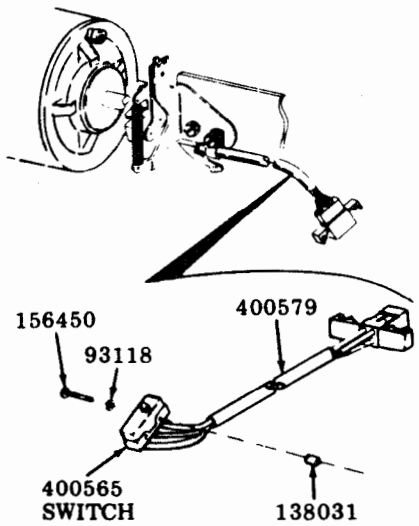

C. COMPONENT ANALYSIS (Contd)

6. PRINTER – 80-COLUMN TRACTOR FEED

ANALYSIS QUESTION	"YES" RESPONSE DIRECTIVE	"NO" RESPONSE DIRECTIVE
1. Is the 80-column tractor feed printer 40P151? Is the 80-column tractor feed printer 40P154?	Go to 2. Go to 20.	
2. Remove printer from cabinet. Connect 402781 ac line cord adapter and 402779 line cord with switch to J113 connector. Plug 402782 interlock strapping plug into J114. Operate printer Test switch to Off. Operate 402779 line cord with switch to On. Does printer motor run?	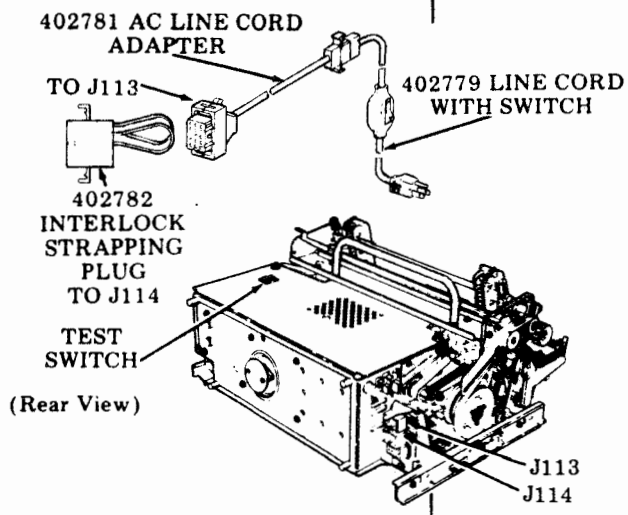 40P151 or 40P153 Tractor Feed Printer. Go to 3.	Go to 5.
3. Operate 402779 line cord with switch to Off. Remove 410076 (or 410640) circuit card. Connect 408646 test assembly and 408649 cable as shown. *Caution: Observe caution label on 408649 cable when connecting plug to J3 connector.* Operate MTR switch on 408646 test assembly to Off. Operate 402779 line cord with switch to On. Does printer motor run?	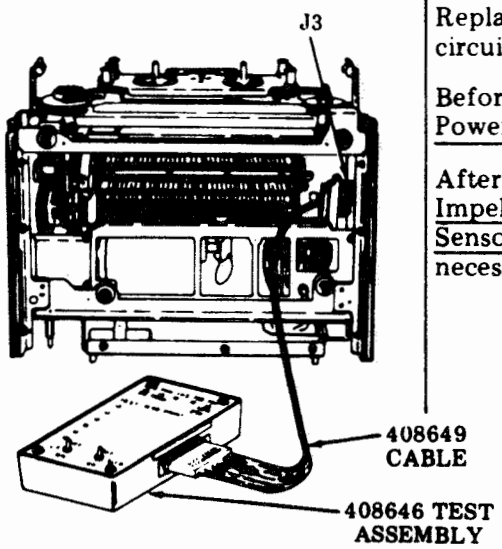 Go to 4.	Replace 410076 (or 410640) circuit card. Before installing card, check Power Supply Voltage adjustment. After installing card, check Impeller Shaft Sensor and Flag Sensor adjustments. Remake if necessary.

ANALYSIS QUESTION	"YES" RESPONSE DIRECTIVE	"NO" RESPONSE DIRECTIVE
10. Reconnect J105 connector. Remove 410150 circuit card. Replace F100 fuse (143306). Operate 402779 line cord with switch to On. Does F100 fuse blow?	Check for short in 402620 or 402789 power module. Replace 402620 or 402789 power module. 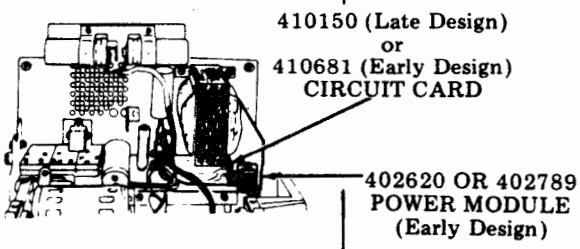 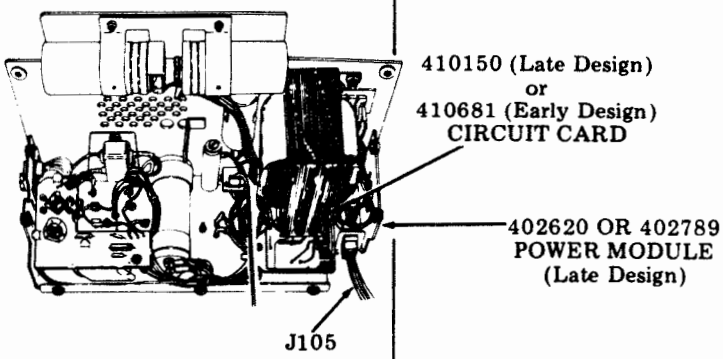 	Replace 410150 circuit card.
11. Remove 410076 (or 410640) circuit card. Connect 408646 test assembly to J3 connector as shown. *Caution: Observe caution label on 408649 cable when connecting plug to J3 connector.* Operate 402779 line cord with switch to On.	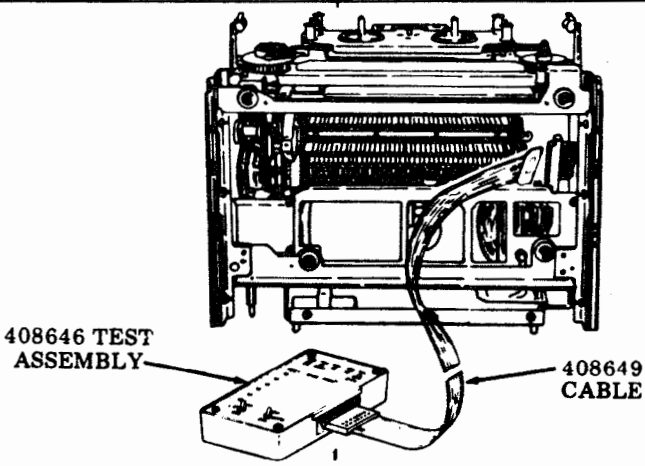 	

C. COMPONENT ANALYSIS (Contd)

6. PRINTER -- 80-COLUMN TRACTOR FEED (Contd)

ANALYSIS QUESTION	"YES" RESPONSE DIRECTIVE	"NO" RESPONSE DIRECTIVE
11. (Cont) Operate MTR switch on 408646 test assembly to On. Does motor run?	Replace 410076 (or 410640) circuit card. Before installing the new card, check the power supply voltage. After the card is installed, check the Impeller Shaft Sensor and Flag Sensor adjustments. Remake, if necessary.	Go to 12.
12. Check for -24 V dc±1% between TP3 and TP2, TP3 and TP1 on 408646 test assembly. Is -24 V dc present?	Go to 13.	Check F1 (long fuse on top right of 410150 circuit card). Replace 321955 fuse if blown. Replace 410150 circuit card. If fuse blows again, replace Q-2 transistor (318835). Replace 402620 or 402789 power module.
13. Does TEST lamp on 408646 test assembly light?	Go to 14.	Replace 402861 test switch.
14. Check for -5 V dc between TP3 and TP5 on 408646 test assembly. Is -5 V dc present?	Operate 402779 line cord with switch Off. Go to 15.	Replace 410150 circuit card.

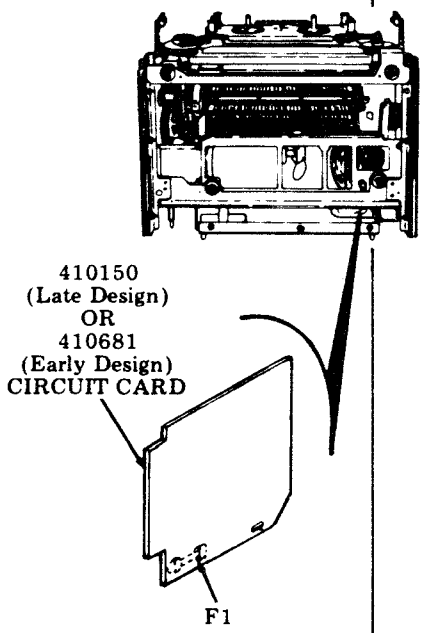

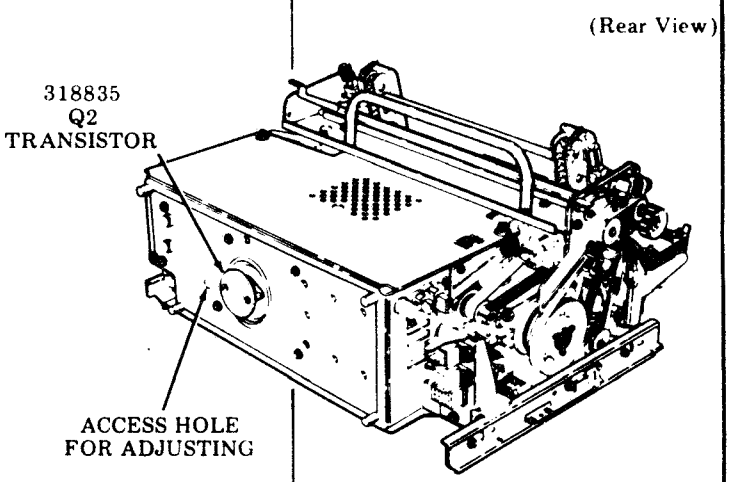

ANALYSIS QUESTION	"YES" RESPONSE DIRECTIVE	"NO" RESPONSE DIRECTIVE
15. Separate 402620 or 402789 power module from printer leaving all cabling connected. Operate 402779 line cord with switch to On. Operate MTR switch on 408646 test assembly to On. Measure 115 V ac ±10% between TP3 on 408646 test assembly and terminal 4 on K100 relay. Is 115 V ac present? 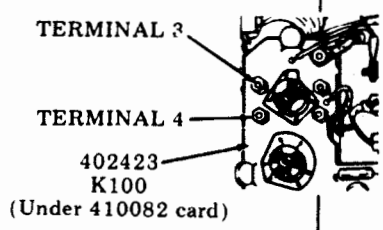	Go to 16. 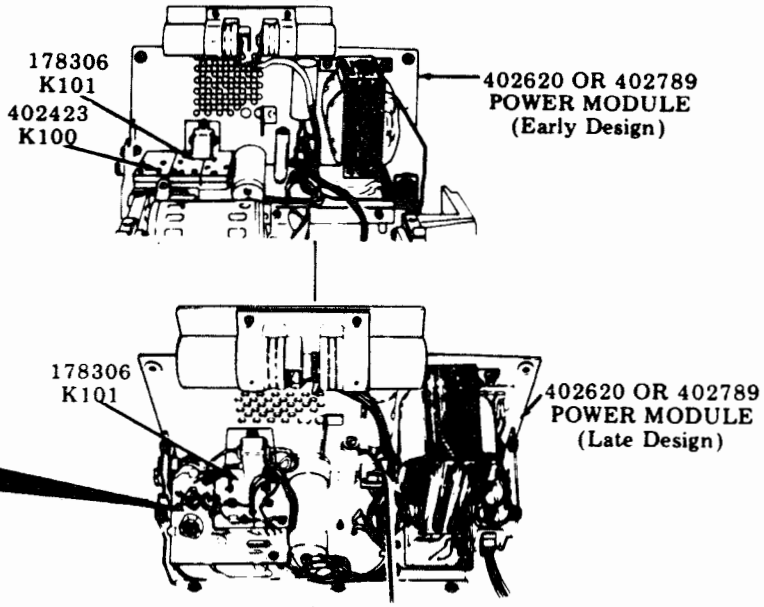	Replace K101 relay 178306.
16. Measure 115 V ac ±10% between TP3 on 408646 test assembly and terminal 3 on K100 relay. Is 115 V ac present?	40P151 or 40P154 — Go to 17.	Replace K100 relay (402423).

C. COMPONENT ANALYSIS (Contd)

6. PRINTER – 80-COLUMN TRACTOR FEED (Contd)

ANALYSIS QUESTION	"YES" RESPONSE DIRECTIVE	"NO" RESPONSE DIRECTIVE
17. Operate 402779 line cord with switch to Off. Disconnect J107 connector on cable running to the motor. Measure the following resistances on J107 connector: 402402 Motor — General Electric Terminal 1 to 2 — 33 ohms Terminal 1 to 3 — 45 ohms Terminal 2 to 3 — 12 ohms (all readings ± 10%). 402402 Motor — Robbins & Myers Terminal 1 to 2 — 19 ohms Terminal 1 to 3 — 30 ohms Terminal 2 to 3 — 11 ohms (all readings ± 10%) Are resistances correct?	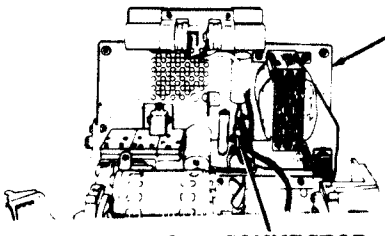 402620 OR 402789 POWER MODULE (Early Design) J107 CONNECTOR 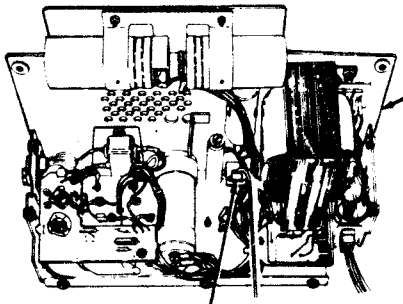 402620 OR 402789 POWER MODULE (Late Design) J107 CONNECTOR ROUND BEARING ON 402402 MOTOR General Electric 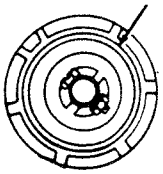 (Left Side View) Replace entire printer.	QUINTUPLE BEARING ON 402402 MOTOR Robbins & Myers 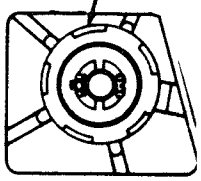 (Left Side View) Replace 402402 motor.

ANALYSIS QUESTION	"YES" RESPONSE DIRECTIVE	"NO" RESPONSE DIRECTIVE
18. Remove printer from cabinet. Connect the 402781 ac line cord adapter and 402779 line cord with switch to J113 connector. Plug 402782 interlock plug into J114. Set Test switch to Off. Operate 402779 line cord with switch to On. Does printer motor run? VOLTAGE ADJUSTMENT ACCESS HOLE	Go to 19. 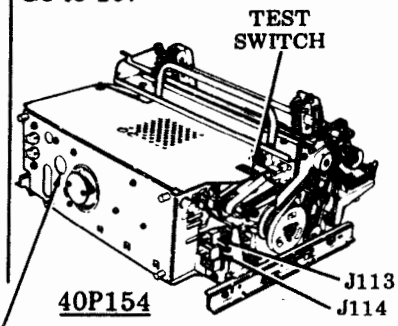 40P154	Go to 21. 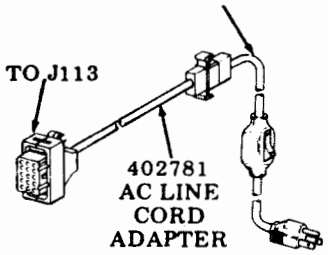 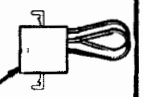 402782 INTERLOCK STRAPPING PLUG TO J114
19. Operate 402779 line cord with switch to Off. Remove 410071 circuit card. Connect the 408646 test assembly as shown. *Caution: Observe caution label on 408650 when connecting plug to P109 connector.* Operate MTR switch on 408646 test assembly to Off. Operate 402779 line cord with switch to On. Does printer motor run?	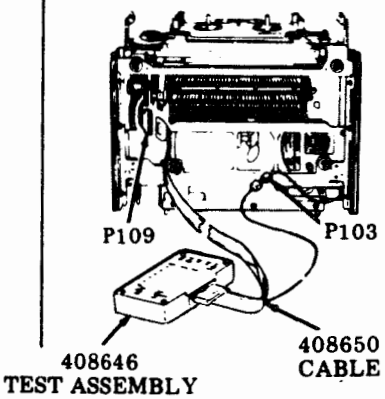 40P154 Go to 20.	Replace 410071 circuit card. Before installing circuit card. check the Power Supply Voltage adjustment. With a volt-ohmmeter, check -24 V dc ±1% between TP3 and TP2, TP3 and TP1 on 408646 test assembly. If the voltage is outside the required limits, adjust R-9 resistor on 410151 circuit card. See illustration in step 20. After the circuit card is installed, check the Impeller Shaft Sensor and Flag Sensor adjustments; remake if necessary.

C. COMPONENT ANALYSIS (Contd)

6. PRINTER – 80-COLUMN TRACTOR FEED (Contd)

ANALYSIS QUESTION	"YES" RESPONSE DIRECTIVE	"NO" RESPONSE DIRECTIVE
20. Does the test lamp on 408646 test assembly light?	Replace 402861 test switch. 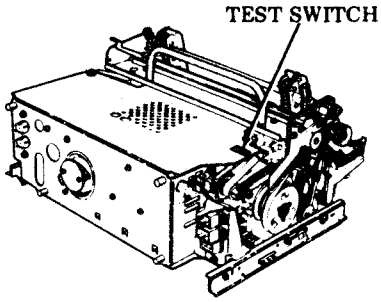 40P154	Replace 410155 circuit card assembly. 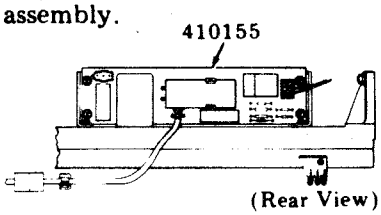 Replace printer.
21. Operate Test switch on printer to On. Does the printer motor run?	Go to 39.	Go to 22.
22. Is the motor gear and associated drive mechanisms free to operate (no mechanical bind)?	Check F100 fuse. If blown, replace with 143306 fuse (1 amp SL-BL MDL-1). If fuse blows again, go to 25. Check thermal overload protector – depress RED reset button on fan end of motor. Go to 30. 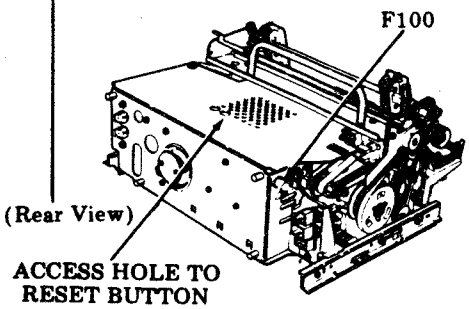 40P154	If mechanical bind is not clearly evident and easily rectified, replace entire printer. 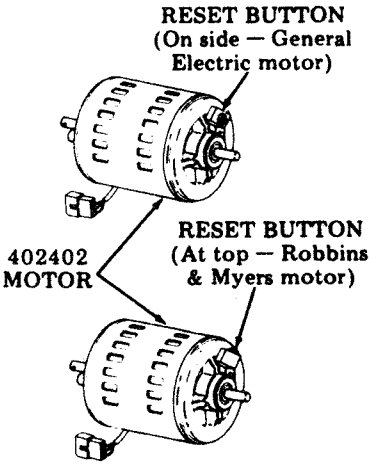

ANALYSIS QUESTION	"YES" RESPONSE DIRECTIVE	"NO" RESPONSE DIRECTIVE
23. Disconnect P101. Operate 402779 line cord with switch to On. Does bench fuse blow?	Problem is in test cable or printer cable (P101 to J113). Locate short. Replace F100 fuse (143306). 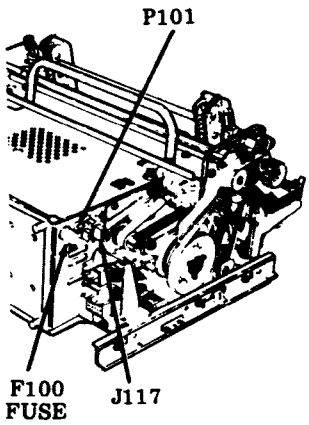 40P154	Operate 402779 line cord with switch Off. Go to 24.
24. Reconnect P101. Disconnect P100 on the motor control assembly. Operate 402779 line cord with switch to On. Does F100 fuse blow? 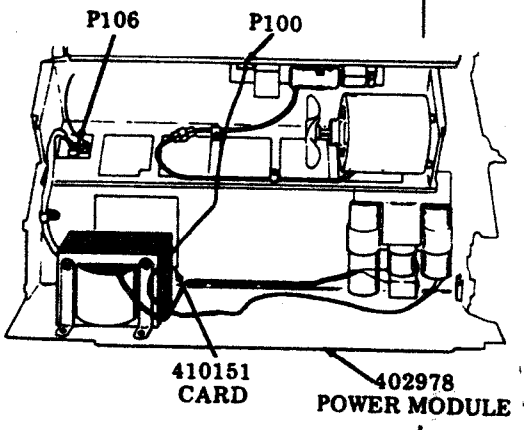 	Operate 402779 line cord with switch Off. Replace F100 fuse (143306). Go to 29.	Operate 402779 line cord with switch Off. Go to 25.

C. COMPONENT ANALYSIS (Contd)

6. PRINTER -- 80-COLUMN TRACTOR FEED (Contd)

ANALYSIS QUESTION	"YES" RESPONSE DIRECTIVE	"NO" RESPONSE DIRECTIVE
25. Reconnect P100. Disconnect P105 on the motor control assembly. Operate 402779 line cord with switch to On. Does F100 fuse blow?	Operate 402779 line cord with switch Off. Replace F100 fuse (143307). Go to 26.	Replace 410071 circuit card. After the circuit card is installed, check the Impeller Shaft Sensor and Flag Sensor adjustments; remake if necessary.
26. Reconnect P105. Disconnect P107 on the motor control assembly. Operate 402779 line cord with switch to On. Does F100 fuse blow?	Operate 402779 line cord with switch Off. Replace 410155 circuit card. Replace F100 fuse (143306). Go to 27.	Replace 402402 motor.
27. Reconnect P107. Remove 410151 circuit card from J102 receptacle. Operate 402779 line cord with switch to On. Does F100 fuse blow?	Operate 402779 line cord with switch Off. Replace F100 fuse (143306). Go to 28.	Replace 410151 circuit card.

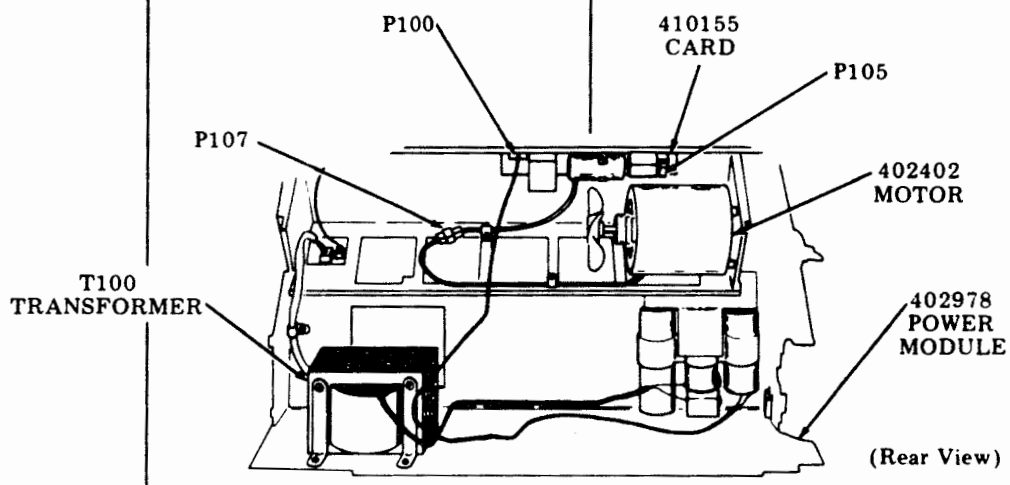

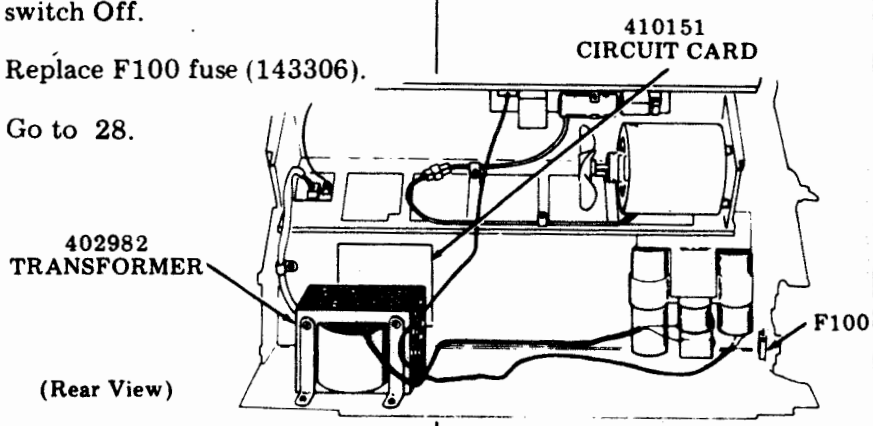

ANALYSIS QUESTION	"YES" RESPONSE DIRECTIVE	"NO" RESPONSE DIRECTIVE
28. Reinsert 410151 circuit card. Remove 410071 circuit card. Operate 402779 line cord with switch to On. Does F100 fuse blow?	Operate 402779 line cord with switch Off. Reconnect 410071 circuit card. Replace F100 fuse (143306). Go to 29.	Operate 402779 line cord with switch Off. Replace 410071 circuit card. After the circuit card is installed, check the Impeller Shaft Sensor and Flag Sensor adjustments; remake if necessary.
29. With an ohmmeter, check for short between primary and secondary windings on T100 transformer. Is transformer shorted?	Replace T100 transformer (402982). 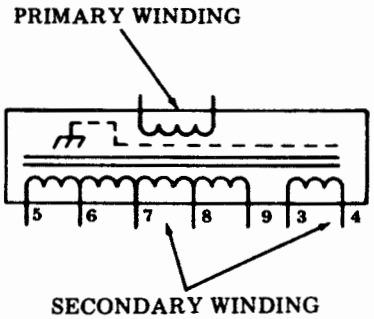 	Replace entire printer.
30. Remove 410071 circuit card from printer. Connect the 408646 test assembly as shown. *Caution: Observe caution label on 408650 cable when connecting plug to P109 connector.* Operate 402779 line cord with switch to On. Operate MTR switch on 408646 test assembly to On. Does printer motor run?	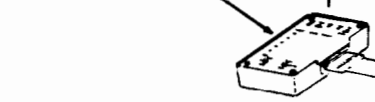 Operate 402779 line cord with switch Off. Replace 410071 circuit card. After the card is installed, check the Impeller Shaft Sensor and Flag Sensor adjustment; remake if necessary.	Go to 33. 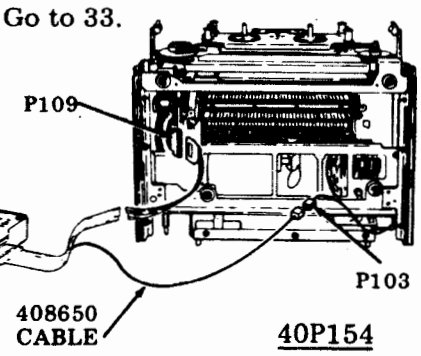

C. COMPONENT ANALYSIS (Contd)

6. PRINTER -- 80-COLUMN TRACTOR FEED (Contd)

ANALYSIS QUESTION	"YES" RESPONSE DIRECTIVE	"NO" RESPONSE DIRECTIVE
31. With a volt-ohmmeter, check -24 V dc±1% between TP3 and TP2, TP3, and TP1 on 408646 test assembly. Is -24 V dc present?	Go to 32. 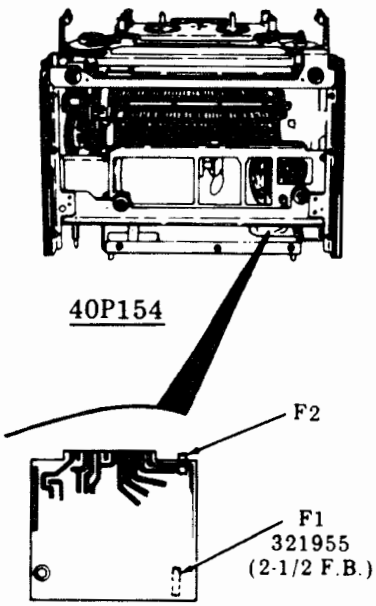 	Check F1 (long fuse on top right of 410151 circuit card). If fuse is blown, replace with 321955 (2-1/2 amp fast blow) fuse. If fuse blows again, replace 410151 circuit card. Replace 318835 Q2 transistor. Replace 402978 power module. (Rear View) 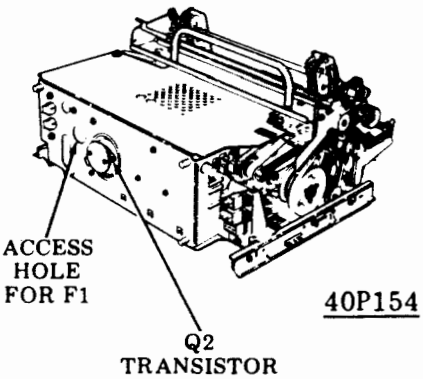
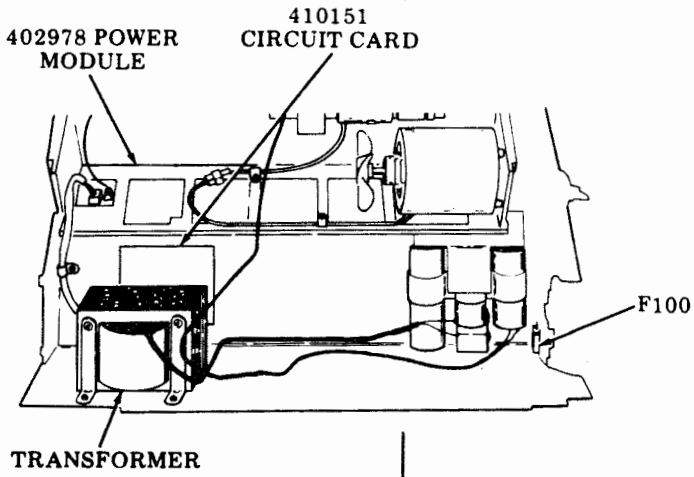 		
32. Operate printer Test switch On. Does the Test lamp on 408646 test assembly light?	Go to 33.	Replace 402861 test switch.

ANALYSIS QUESTION	"YES" RESPONSE DIRECTIVE	"NO" RESPONSE DIRECTIVE
33. Operate the 402779 line cord with switch to Off. Disconnect P100 plug from 410155 circuit card assembly. Operate the 402779 line cord with switch to On. Measure 117 V ac between terminals 2 and 3 on P100 connector. Is 117 V ac present?	Operate 402779 line cord with switch Off. Go to 34.	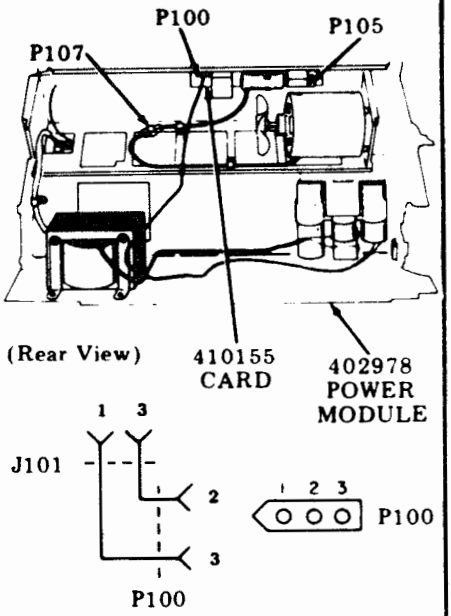 Check wiring from J101 terminals 1 and 3 to P100 terminals 3 and 2.
34. Reconnect P100. Disconnect P105 plug. Operate 402779 line cord with switch On. With a volt-ohmmeter, check for -24 V dc between terminals 1 and 3 on P105. 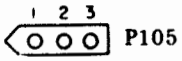 Is -24 V dc present?	Operate 402779 line cord with switch Off. Go to 35.	Check wiring from P105 terminals 1 and 3 to P109 terminals 5 and 6. 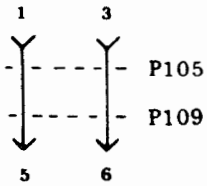
35. Reconnect P105. Disconnect P107 on the motor control assembly. Operate 402779 line cord with switch to On. With a volt-ohmmeter, check for 115 V ac between terminals 1 and 2 and between 2 and 3 on P107. Is 115 V ac present?	Operate 402779 line cord with switch Off. Go to 36. 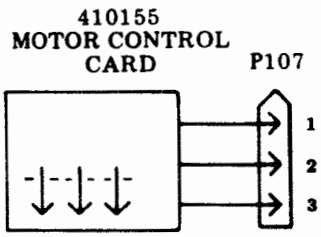	Replace 410155 circuit card assembly.

C. COMPONENT ANALYSIS (Contd)

6. PRINTER -- 80-COLUMN TRACTOR FEED (Contd)

ANALYSIS QUESTION	"YES" RESPONSE DIRECTIVE	"NO" RESPONSE DIRECTIVE
36. Reconnect P107. Disconnect J117 connector from power module. Operate 402779 line cord with switch to On. Measure 14 V ac between terminals 1 and 3 and between terminals 3 and 5 on P117 connector. Is 14 V ac present?	Go to 37. 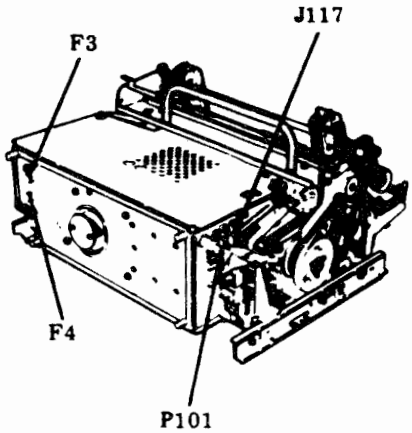 40P154	Check F3 and F4 fuses. If blown, replace with 129919 fuse, 4.0A SL-BL. Go to 37.
37. Measure 9.2 V ac between terminals 2 and 3 and between terminals 3 and 4 on P117 connector. Is 9.2 V ac present?	Reconnect J117. Operate 402779 line cord with switch to Off. Go to 38.	Replace 402978 power module.
38. Disconnect P107. With an ohmmeter, measure the following resistances between the indicated terminals on J107 connector: 402402 Motor — General Electric Terminal 1 to 2 — 33 ohms Terminal 1 to 3 — 45 ohms Terminal 2 to 3 — 12 ohms (All readings ±10%) 402402 Motor — Robbins & Myers Terminal 1 to 2 — 19 ohms Terminal 1 to 3 — 30 ohms Terminal 2 to 3 — 11 ohms (All readings ±10%) Are measured resistances correct?	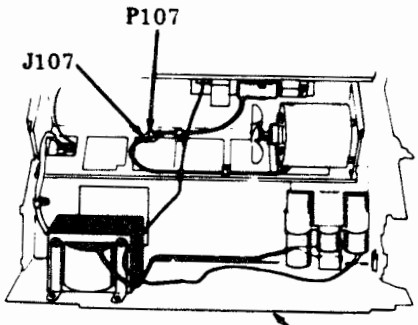 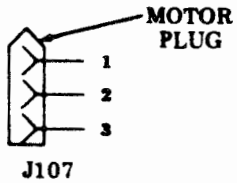 Replace entire printer.	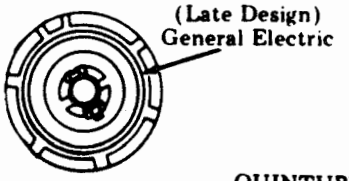 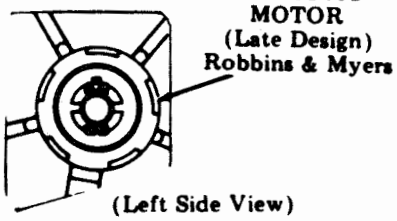 Replace 402402 motor.

ANALYSIS QUESTION	"YES" RESPONSE DIRECTIVE	"NO" RESPONSE DIRECTIVE
39. Is the impeller shaft being driven?	Go to 40.	Check the 400631 impeller shaft drive belt. Replace if worn or broken. Check the 400280 motor shaft sprocket. Replace if worn or broken. 40P151, or 40P154 400631 IMPELLER SHAFT DRIVE BELT 400280 SPROCKET IMPELLER SHAFT
40. Does printer line feed properly with printer Test switch On? 400632 BELT 400634 BELT 40P151, or 40P154 Failure symptoms are: No line feed Intermittent line feed Continuous line feed.	Go to 44. PAWLS 402905 SPRING GEAR	Check 400634 line feed belts. Replace if worn or broken. Check line feed pawls for engagement with gear. Check line feed bail spring. Replace if broken or worn. MAGNET ASSEMBLY CORE Check loose mounting of line feed magnet assembly on its core. Replace 402621 line feed assembly if magnet coil is loose. Go to 41.

C. COMPONENT ANALYSIS (Contd)

6. PRINTER -- 80-COLUMN TRACTOR FEED (Contd)

ANALYSIS QUESTION	"YES" RESPONSE DIRECTIVE	"NO" RESPONSE DIRECTIVE
41. 40P151 Remove 410076 (or 410640) circuit card. 40P154 Remove 410071 circuit card. Connect 408646 test assembly as shown: *Caution: Observe caution label on 408649 or 408650 cable when connecting plug to J3 or P109.* Operate 402779 line cord with switch to On. Operate MTR switch on 408646 test assembly to On. Operate LF switch on 408646 test assembly to On. Does the printer line feed?	40P151 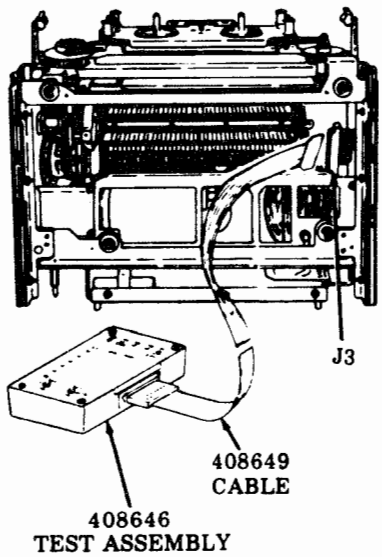 Operate 402779 line cord with switch Off. 40P151 Replace 410076 (or 410640) circuit card. 40P154 Replace 410071 circuit card. After the card is installed, check the Impeller Shaft Sensor and Flag Sensor adjustment; remake if necessary.	40P154 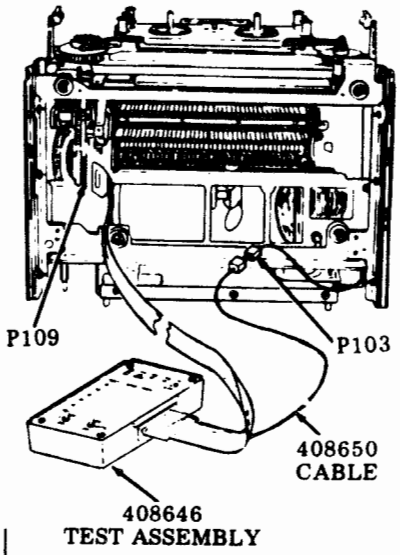 Go to 42.

ANALYSIS QUESTION	"YES" RESPONSE DIRECTIVE	"NO" RESPONSE DIRECTIVE
42. Check for -24 V dc ±1% between TP2 and TP3 on 408646 test assembly. Is -24 V dc ± 1% present?	Go to 45.	Refine -24 V dc adjustment if voltage reading is outside tolerances. 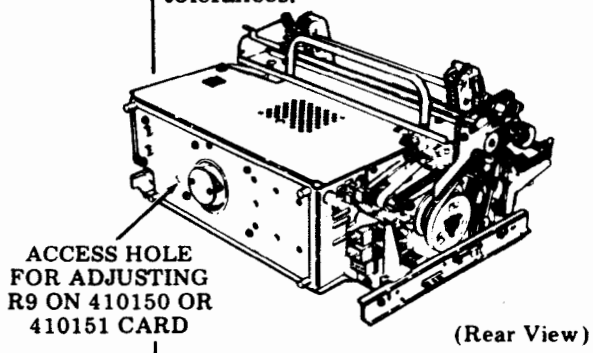 <u>40P151</u> Replace 410150 circuit card. <u>40P154</u> Replace 410151 circuit card.
43. Operate the 402779 line cord with switch to Off. Disconnect P3 (40P151) or J109 (40P154) test cable from printer. Measure for 33 ohms resistance at the following points: 40P151: At J3 between terminals 1 and K. 40P154: At P109 between terminals 1 and 4. Is measured resistance correct?	Check the following adjustments. <u>Clutch Shoe Release Arm</u> <u>Line Feed Armature Gap</u> <u>Line Feed Bar Eccentric and Drive Belt Tension</u> <u>Clutch Drive Belt Tension</u> <u>40P151, or 40P154</u> Replace 402460 paper handling assembly.	Replace line feed magnet assembly: <u>40P151, or 40P154</u> 402621 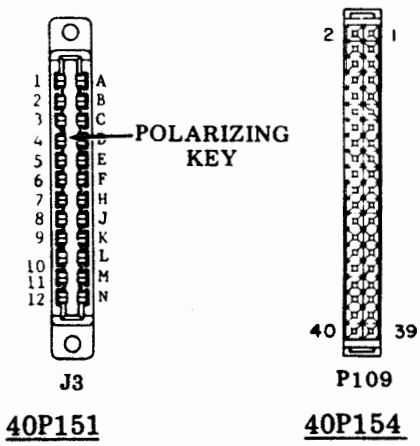
44. Place printer LF1 — LF2 switch to position LF2. Does the printer double line space properly?	Go to 48.	Go to 47.

C. COMPONENT ANALYSIS (Contd)

6. PRINTER -- 80-COLUMN TRACTOR FEED (Contd)

ANALYSIS QUESTION	"YES" RESPONSE DIRECTIVE	"NO" RESPONSE DIRECTIVE
45. 40P151 Remove 410076 (or 410640) circuit card. 40P154 Remove 410071 circuit card. Connect 408646 test assembly as shown. *Caution: Observe caution label on 408649 or 408650 cable when connecting plug to J3 or P109 connector.* Operate 402779 line cord with switch On. Does the line feed lamp on 408646 test assembly light?	40P151 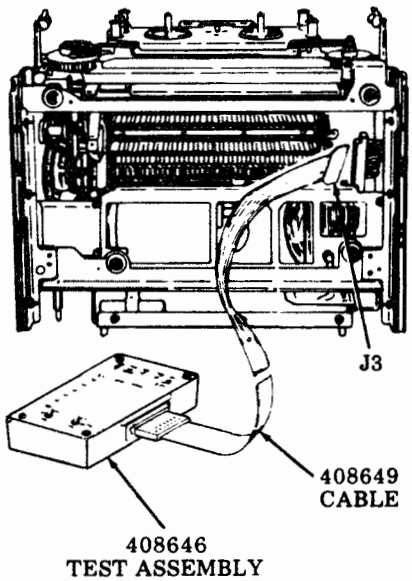 Operate 402779 line cord with switch Off. 40P151 Replace 410076 (or 410640) circuit card. 40P154 Replace 410071 circuit card. After the card is installed, check the Impeller Shaft Sensor and Flag Sensor adjustment; remake if necessary.	40P154 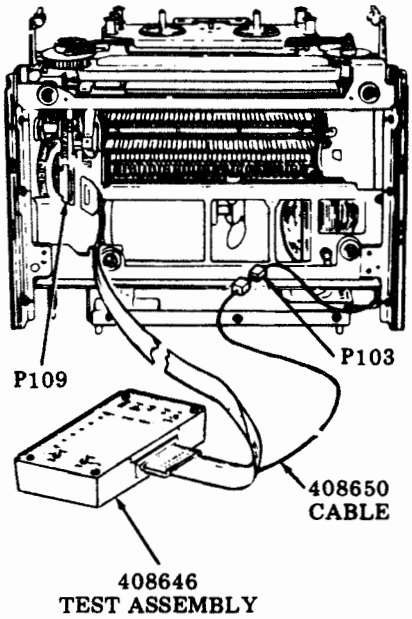 Replace 402861 switch. 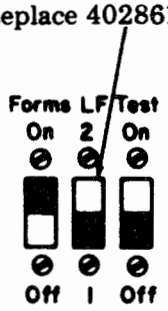

ANALYSIS QUESTION	"YES" RESPONSE DIRECTIVE	"NO" RESPONSE DIRECTIVE
46. Is the ribbon feed mechanism operating properly? Ribbon spools rotating. Ribbon reverse working. No ribbon foldover. *Note:* To check ribbon reversing, manually operate the reversing arms with printer operating (printer Test switch On).	Go to 47.	Check ribbon drive belt. Replace if worn or broken. 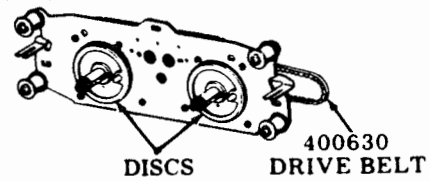 Remove ribbon mechanism and check the following springs. Replace if broken. 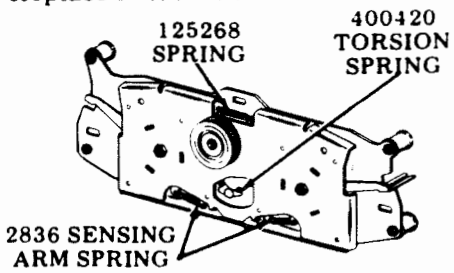 Replace 402420 ribbon mechanism. Check the Ribbon Tracking adjustment.
47. Are any characters being printed? 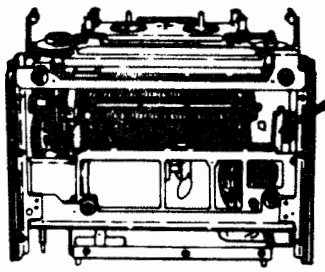 40P151 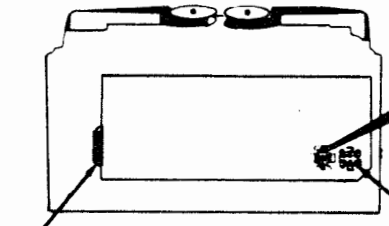 40P154	Go to 48. 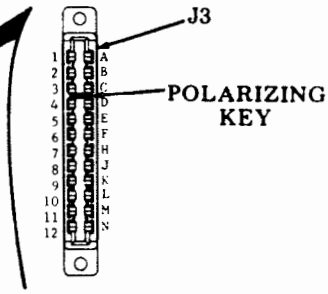 	Check the following adjustments: (1) Impeller Shaft Sensor Gap (2) Flag Sensor Gap Check impeller sensor for a maximum of 145 ohms: 40P151: Measure at J3 between terminals H and J. 40P154: Measure at P106 between terminals 1 and 2. Check flag sensor for a maximum of 145 ohms: 40P151: Measure at J3 between terminals E and F. 40P154: Measure at P106 between terminals 2 and 3. Replace sensor (400615) if open or resistance exceeds maximum requirement.

C. COMPONENT ANALYSIS (Contd)

6. PRINTER -- 80-COLUMN TRACTOR FEED (Contd)

ANALYSIS QUESTION	"YES" RESPONSE DIRECTIVE	"NO" RESPONSE DIRECTIVE
47. (Cont)		40P151 Replace 410076 (or 410640) circuit card. 40P154 Replace 410071 circuit card. After the card is installed, check the Impeller Shaft Sensor and Flag Sensor adjustment; remake if necessary.
48. Is the carrier font symbol the only symbol printed? Font symbols: A A Up-Low A 8 Monocase etc.	Go to 49.	If ! (exclamation) or __ (underline) are printed, check the following adjustments: Flag Sensor Gap Impeller Shaft Sensor Gap Flag Sensor Final 40P151 Replace 410076 (or 410640) circuit card. 40P154 Replace the 410071 circuit card. After the card is installed, check the Impeller Shaft Sensor and Flag Sensor adjustment, remake if necessary.
49. Are any columns not printing?	Go to 50.	Go to 54.
50. Are any of the following groups of columns missing? 1—12 13—24 25—36 37—48 49—60 61—72 73—80	40P151 Replace 410076 (or 410640) circuit card. 40P154 Replace 410071 circuit card. After the card is installed, check the Impeller Shaft Sensor and Flag Sensor adjustment; remake if necessary.	Go to 51.

ANALYSIS QUESTION	"YES" RESPONSE DIRECTIVE	"NO" RESPONSE DIRECTIVE
51. Of the columns that are missing, are they all odd-numbered (example: 1, 3, 19, 71) or are they all even-numbered (example: 2, 8, 42, 68)?	Check the position of the anti-freeze strip. Check for oil on antifreeze strip. If present, spray with 337449 Degreaser (Freon TF). 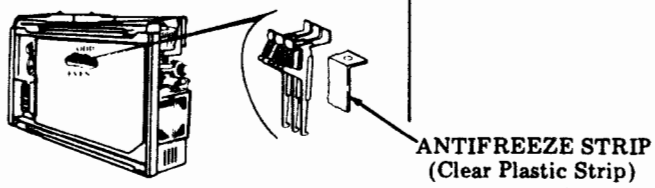 If antifreeze strip is distorted or missing, replace entire printer.	Go to 52.
52. Are one or more columns missing?	Check the following adjustments: Impeller Shaft Sensor Gap Flag Sensor Gap Impeller Shaft Sensor (Final) 40P151 Replace 410076 (or 410640) circuit card. 40P154 Replace 410071 circuit card. After the circuit card is installed, check the Impeller Shaft Sensor and Flag Sensor adjustments; remake if necessary. Replace entire printer.	Go to 53.
53. Are any characters not printed?	Check type carrier for missing pallets. Replace type carrier. 40P151 Replace 410076 (or 410640) circuit card. 40P154 Replace 410071 circuit card. After the circuit card is installed, check the Impeller Shaft Sensor and Flag Sensor adjustments; remake if necessary.	Place printer in service.

C. COMPONENT ANALYSIS (Contd)

6. PRINTER -- 80-COLUMN TRACTOR FEED (Contd)

ANALYSIS QUESTION	"YES" RESPONSE DIRECTIVE	"NO" RESPONSE DIRECTIVE
54. Is the font symbol clipped on the left or right?	Check the Impeller Shaft To Carrier Phasing – Final adjustment.	Go to 55.
55. Are adjacent characters in the type carrier printed in place of the proper character (T instead of S, B instead of A, etc)?	Check the following adjustments: Flag Sensor Gap Impeller Shaft Sensor Gap Check that pallets and flags are in proper position. Type Carrier — Flag Position 400645AA — 43, 107, 171 400629AB — 12, 108 400774AC — 44, 108, 172 400775AD — 108, 172 400776AF — 12, 108 400778AH — 44, 108, 172 400779AP — 12, 108 400784AN — 12, 108 400785AQ — 43, 107, 171 408346AZ — 12, 60, 108, 156 Replace entire printer.	Go to 56.
56. Is copy free of horizontal ink smudges caused by the ribbon rubbing against the paper?	Go to 57.	40P151, or 40P154 Replace 402798 ribbon shield if deformed. Check the following adjustments: Ribbon Guide (Final) Paper Positioner

ANALYSIS QUESTION	"YES" RESPONSE DIRECTIVE	"NO" RESPONSE DIRECTIVE
57. Is copy free of double print or ghost images?	Go to 58.	Check the following adjustments: Left Carrier Sprocket Right Carrier Sprocket Check that type pallets are seated properly in carrier. Seat pallets with 402878 gauge. Replace type carrier. Replace entire printer.
58. Is the printed copy clear and easily readable?	Go to 59.	Replace 402444 ribbon. Check the following adjustments: Backup Bar (Final) Left Carrier Sprocket Right Carrier Sprocket Ribbon Guide (Final) Paper Positioner (40P151, 40P154)
59. Is printed copy free from embossing (especially noticeable on characters such as hyphen or underline)?	Go to 60.	Check the Backup Bar (Final) adjustment and type carrier pallet alignment.
	400645AA 80-Column — Monocase 400629AB 80-Column — Up-Low 400774AC 80-Column — Weather 400775AD 80-Column — Line Drawing 400776AF 80-Column — Fractions in One Eighths — Up-Low 400778AH 80-Column — Large Gothic with Fractions 400779AP 80-Column — Fractions in One Eighths — Up-Low 400784AN 80-Column —EBCDIC 400785AQ 80-Column — EBCDIC Monocase 408346AZ 80-Column — 48-Character Set	
		Check that type pallets are seated properly in carrier. Seat pallets with 402878 gauge. Replace type carrier.

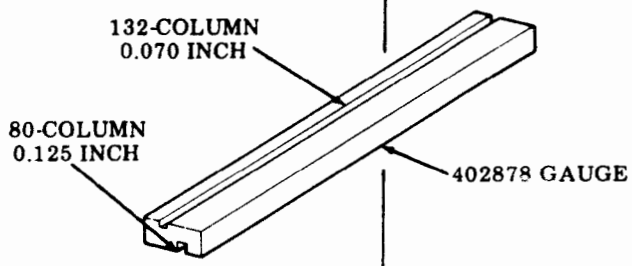

C. COMPONENT ANALYSIS (Contd)

6. PRINTER -- 80-COLUMN TRACTOR FEED (Contd)

ANALYSIS QUESTION	"YES" RESPONSE DIRECTIVE	"NO" RESPONSE DIRECTIVE
60. Is the print density uniform throughout the line without gradual variations?	Go to 61.	Check the following adjustments: Left Carrier Sprocket Right Carrier Sprocket Backup Bar
61. Is the print density uniform throughout the line without random variations?	Go to 62.	Check the following adjustment: 40P151, or 40P154 Paper Positioner Replace entire printer.
62. Are the bottoms of characters printed clearly (not light) at both ends of the line?	Go to 63.	Check the following adjustments: Left Carrier Sprocket Right Carrier Sprocket Check that ribbon shield is below hammer faces. Replace printer.
63. Are all individual characters printed clearly when received?	Go to 64.	Check type carrier for missing, broken, distorted, or dirty type pallets. Replace type carrier. Replace printer.

ANALYSIS QUESTION	"YES" RESPONSE DIRECTIVE	"NO" RESPONSE DIRECTIVE
64. Are there erratic line feeds or some characters printing too high? 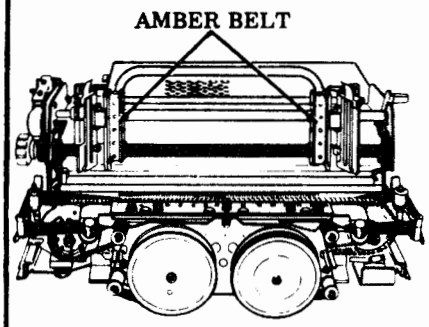 40P151, or 40P154	Check for bind in paper through-out routing path. Check that paper is properly feeding through tractor assemblies. Check the following adjustments: Tractor Phasing Paper Positioner (40P151, or 40P154) Replace 400221 idler. 40P151, or 40P154 If amber belt in tractors is worn or broken, replace 402460 paper handling assembly.	Go to 65.
65. When a FF character or local form feed is received, does paper advance one form correctly (Forms switch On)?	Go to 68.	Verify proper belt installation. Check that belt is not worn or cracked. Replace belt. Check that the selector lever on the form-out assembly is properly detented. Check the following adjustments: Form-Out Contact Lateral Form Selector Lever Guide Form-Out Gear Backlash Form-Out Contact to Belt Spacing Line Feed Bar Eccentric and Drive Belt Tension Go to 66.

C. COMPONENT ANALYSIS (Contd)

6. PRINTER -- 80-COLUMN TRACTOR FEED (Contd)

ANALYSIS QUESTION	"YES" RESPONSE DIRECTIVE	"NO" RESPONSE DIRECTIVE
66. Operate 402779 line cord with switch to Off. 40P151 Remove 410076 (or 410640) circuit card. 40P154 Remove 410071 circuit card. Connect 408646 test assembly as shown. *Caution: Observe caution label on 408649 or 408650 cable when connecting plug to J3 or P109 connector.* Operate 402779 line cord with switch On. Place Forms switch on printer On. Does the FORMS MODE lamp on the 408646 test assembly light?	40P151 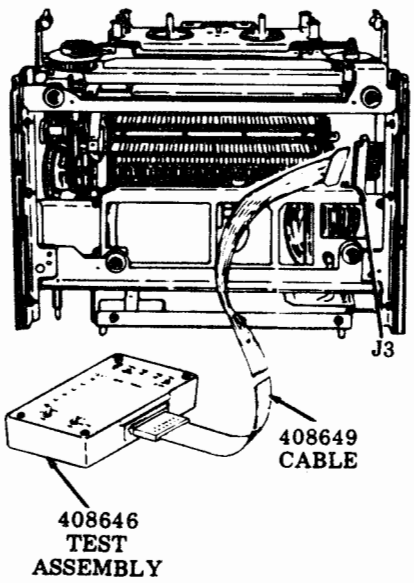 Go to 69.	40P154 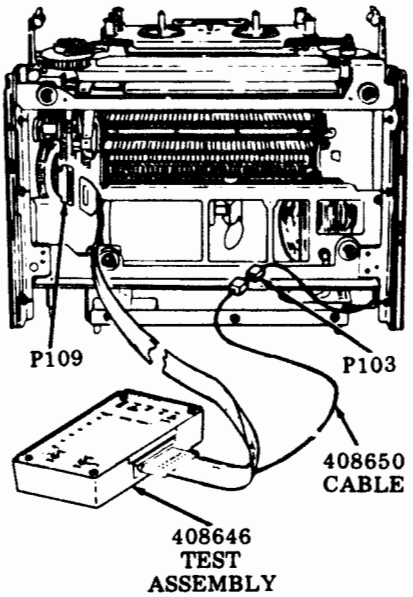 Replace 402861 switch.
67. Operate MTR switch on the 408646 test assembly On. Operate LF switch on the 408646 test assembly On. Does the END OF FORM lamp light when the form-out contact touches the cam lobe on the belt?	Replace 402905 spring. 40P151 Replace 410076 (or 410640) circuit card. 40P154 Replace 410071 circuit card. After the circuit card is installed,check the Impeller Shaft Sensor and Flag Sensor adjustments; remake if necessary. Replace printer. Check Form switch and cabling on cabinet.	40P151, or 40P154 Replace 402570 form-out assembly.

ANALYSIS QUESTION	"YES" RESPONSE DIRECTIVE	"NO" RESPONSE DIRECTIVE
68. Is paper-out indication obtained when a paper-out condition exists?	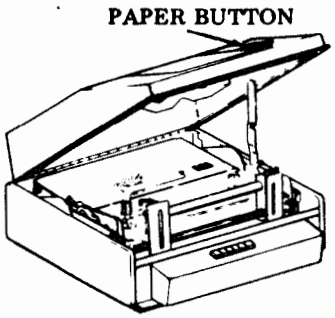 Place printer in service.	Check the Paper-Out Switch adjustment. Go to 69.
69. Operate 402779 line cord with switch Off. 40P151 Remove 410076 (or 410640) circuit card. 40P154 Remove 410071 circuit card. Connect 408646 test assembly as shown. *Caution: Observe caution label on 408649 or 408650 cable when connecting plug to J3 or P109 connector.* Operate 402779 line cord with switch On. Does the FORMS SUPPLY lamp on the 408646 test assembly light (paper in)? Remove paper. Does the FORMS SUPPLY lamp go out and the ALARM lamp light (paper out)?	40P151 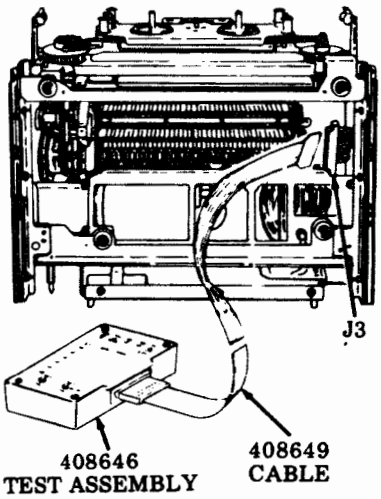 Operate 402779 line cord with switch Off. 40P151 Replace 410076 (or 410640) circuit card. 40P154 Replace 410071 circuit card. After the card is installed, check the Impeller Shaft Sensor and Flag Sensor adjustment; remake if necessary.	40P154 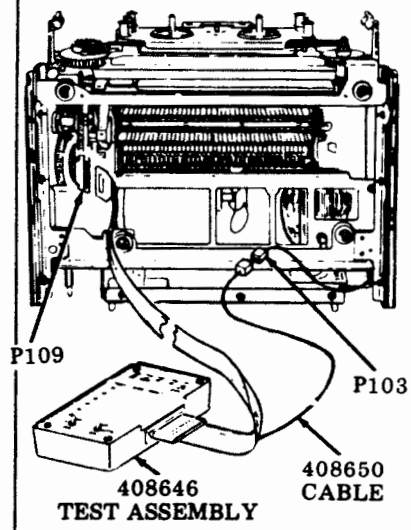 40P151, or 40P154 Replace 402613 switch assembly. 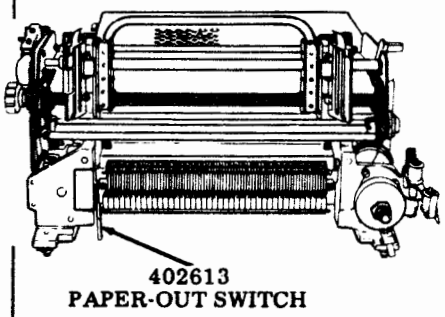

C. COMPONENT ANALYSIS (Contd)

7. PRINTER -- 132-COLUMN TRACTOR FEED

ANALYSIS QUESTION	"YES" RESPONSE DIRECTIVE	"NO" RESPONSE DIRECTIVE
1. **Remove printer from cabinet.** **Connect the 402781 ac line cord adapter and 402779 line cord with switch to J113 connector.** **Plug 402782 interlock plug into J114.** **Set Test switch to Off.** **Operate 402779 line cord with switch to On.** **Does printer motor run?**	**Go to 2.** 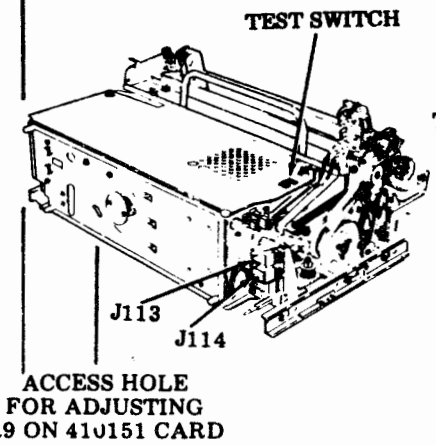 	**Go to 4.** 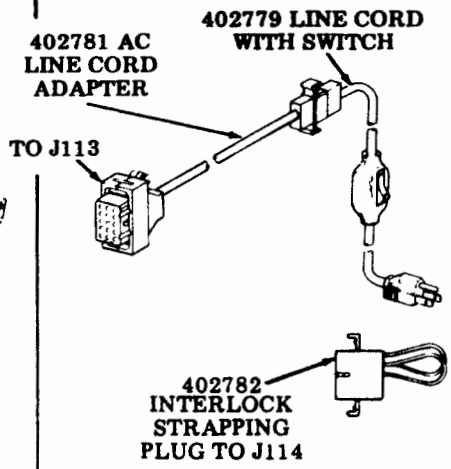
2. Operate 402779 line cord with switch to Off. Remove 410072 (or 410729) circuit card. Connect the 408646 test assembly as shown. *Caution: Observe caution label on 408648 cable when connecting plug to P109 connector.* Operate MTR switch on 408646 test assembly to Off. Operate 402779 line cord with switch to On. Does printer motor run?	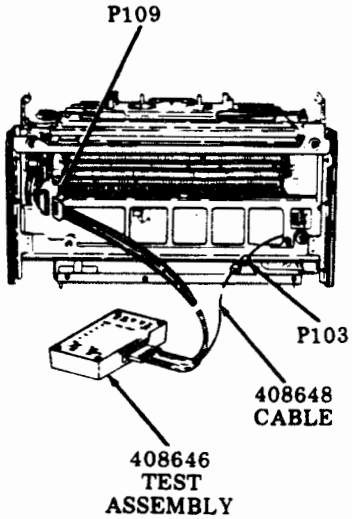 Go to 3.	Replace 410072 (or 410729) circuit card. Before installing circuit card, check the Power Supply Voltage adjustment. With a volt-ohmmeter, check -24 V dc ± 10% between TP3 and TP2, TP3 and TP1 on 408646 test assembly. If the voltage is outside the required limits, adjust R9 resistor on 410151 circuit card. See illustration in step 1. After the circuit card is installed, check the Impeller Shaft Sensor and Flag Sensor adjustments; remake if necessary.

ANALYSIS QUESTION	"YES" RESPONSE DIRECTIVE	"NO" RESPONSE DIRECTIVE
3. Does the TEST lamp on 408646 test assembly light?	Replace 402861 Test switch. 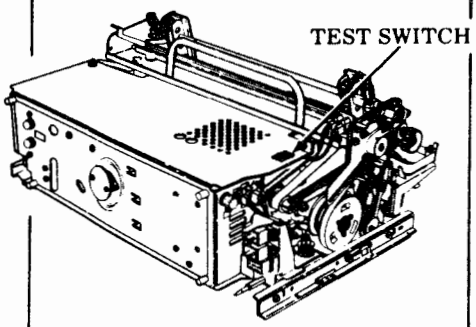	Replace 410155 circuit card assembly. 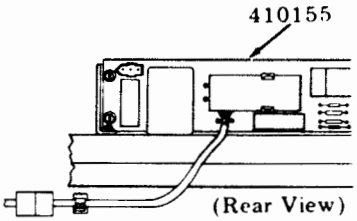 Replace printer.
4. Operate Test switch on printer to On. Does the printer motor run?	Go to 22.	Go to 5.
5. Is the motor gear and associated drive mechanisms free to operate (no mechanical bind)?	Check F100 fuse. If blown, replace with 143306 fuse (1 amp SL-BL MDL-1). If fuse blows again, go to 6. Check thermal overload protector — depress RED reset button on fan end of motor. Go to 13. 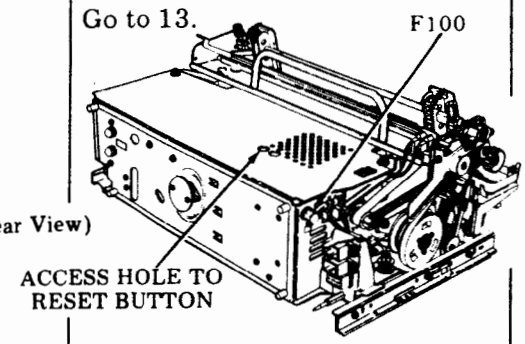	If mechanical bind is not clearly evident and easily rectified, replace entire printer. 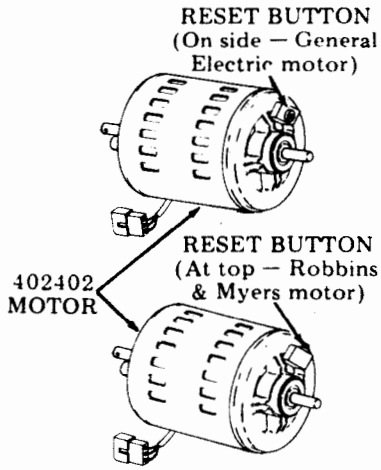
6. Disconnect P101. Operate 402779 line cord with switch to On. Does bench fuse blow?	Problem is in test cable or printer cable (P101 to J113). Locate short. Replace F100 fuse (143306). 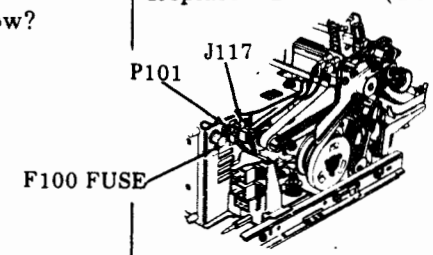	Operate 402779 line cord with switch Off. Go to 7.

C. COMPONENT ANALYSIS (Contd)

7. PRINTER – 132-COLUMN TRACTOR FEED (Contd)

ANALYSIS QUESTION	"YES" RESPONSE DIRECTIVE	"NO" RESPONSE DIRECTIVE
7. Reconnect P101. Disconnect P100 on the motor control assembly. Operate 402779 line cord switch to On. Does F100 fuse blow?	Operate 402779 line cord with switch Off. Replace F100 fuse (143306). Go to 12. 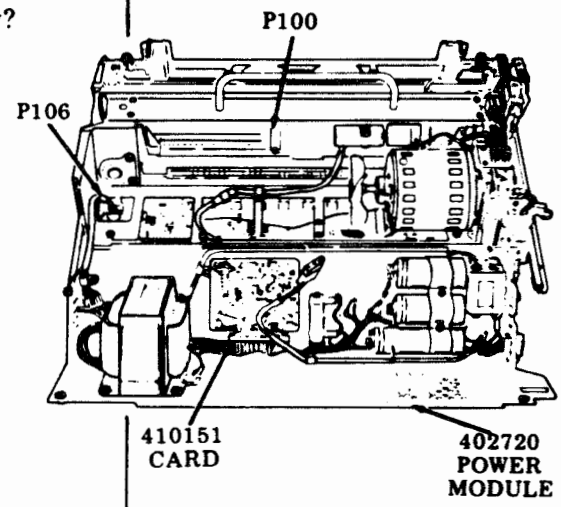 	Operate 402779 line cord switch Off. Go to 8.
8. Reconnect P100. Disconnect P105 on the motor control assembly. Operate 402779 line cord with switch to On. Does F100 fuse blow?	Operate 402779 line cord with switch Off. Replace F100 fuse (143306). Go to 9. 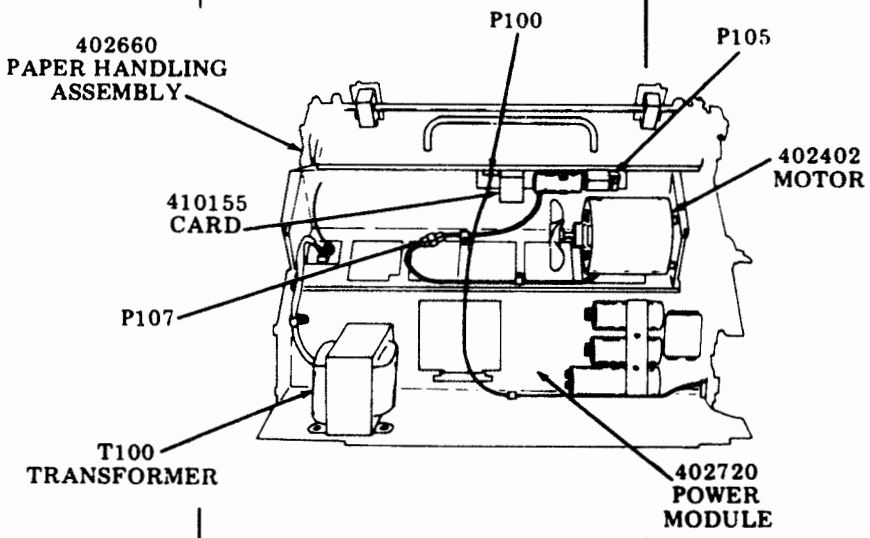 	Replace 410072 (or 410729) circuit card. After the circuit card is installed, check the Impeller Shaft Sensor and Flag Sensor adjustments; remake if necessary.

ANALYSIS QUESTION	"YES" RESPONSE DIRECTIVE	"NO" RESPONSE DIRECTIVE
9. Reconnect P105. Disconnect P107. Operate 402779 line cord with switch to On. Does F100 fuse blow?	Operate 402779 line cord with switch Off. Replace 410155 circuit card. Replace F100 fuse (143306). Go to 10.	Replace 402402 motor.
10. Reconnect P107. Remove 410151 circuit card from J102 receptacle. Operate 402779 line cord with switch to On. Does F100 fuse blow?	Operate 402779 line cord with switch Off. Replace F100 fuse (143306). Go to 11.	Replace 410151 circuit card.
11. Reinsert 410151 circuit card. Remove 410072 (or 410729) circuit card. Operate 402779 line cord with switch to On. Does F100 fuse blow?	Operate 402779 line cord with switch Off. Reconnect 410072 (or 410729) circuit card. Replace F100 fuse (143306). Go to 12.	Operate 402779 line cord with switch Off. Replace 410072 (or 402729) circuit card. After the circuit card is installed, check the Impeller Shaft Sensor and Flag Sensor adjustments; remake if necessary.
12. With an ohmmeter, check for short between primary and secondary windings on T100 transformer. Is transformer shorted?	Replace T100 transformer (402742).	Replace entire printer.

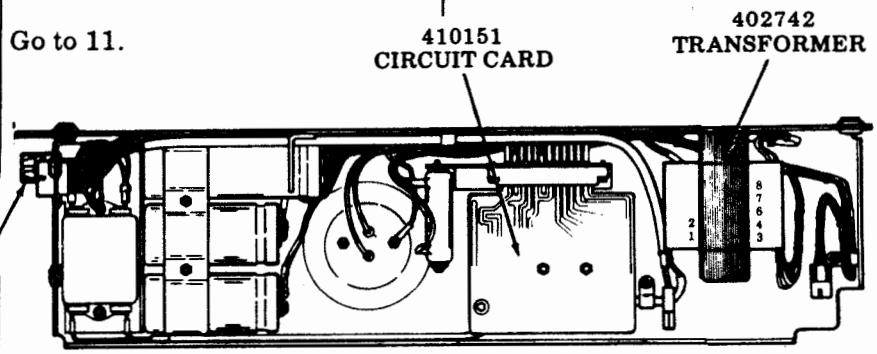

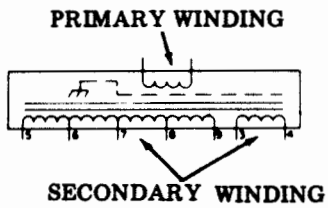

C. COMPONENT ANALYSIS (Contd)

7. PRINTER -- 132-COLUMN TRACTOR FEED (Contd)

ANALYSIS QUESTION	"YES" RESPONSE DIRECTIVE	"NO" RESPONSE DIRECTIVE
13. Remove 410072 (or 410729) circuit card from printer. Connect the 408646 test assembly as shown. *Caution: Observe caution label on 408648 cable when connecting plug to P109 connector.* Operate 402779 line cord with switch to On. Operate MTR switch on 408646 test assembly to On. Does printer motor run?	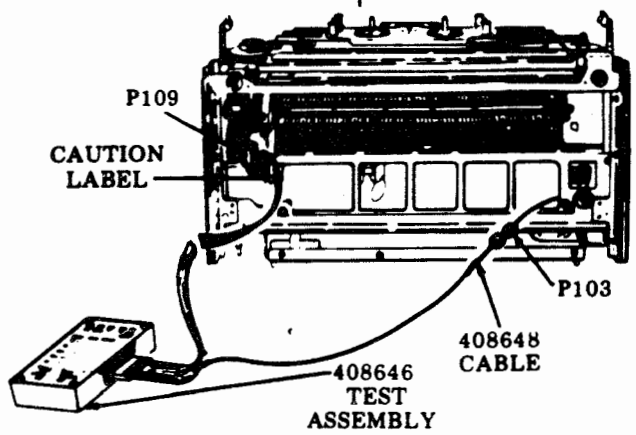 Operate 402779 line cord with switch Off. Replace 410072 (or 410729) circuit card. After the card is installed, check the Impeller Shaft Sensor and Flag Sensor adjustments; remake if necessary.	Go to 14.
14. With a volt-ohmmeter, check -24 V dc ±1% between TP3 and TP2, TP3 and TP1 on 408646 test assembly. Is -24 V dc present?	Go to 15.	Check F1 (long fuse on top right of 410151 circuit card). If fuse is blown, replace with 321955 (2-1/2 amp fast blow) fuse. If fuse blows again, replace 410151 circuit card. Replace 318835 Q2 transistor. Replace 402720 power module.

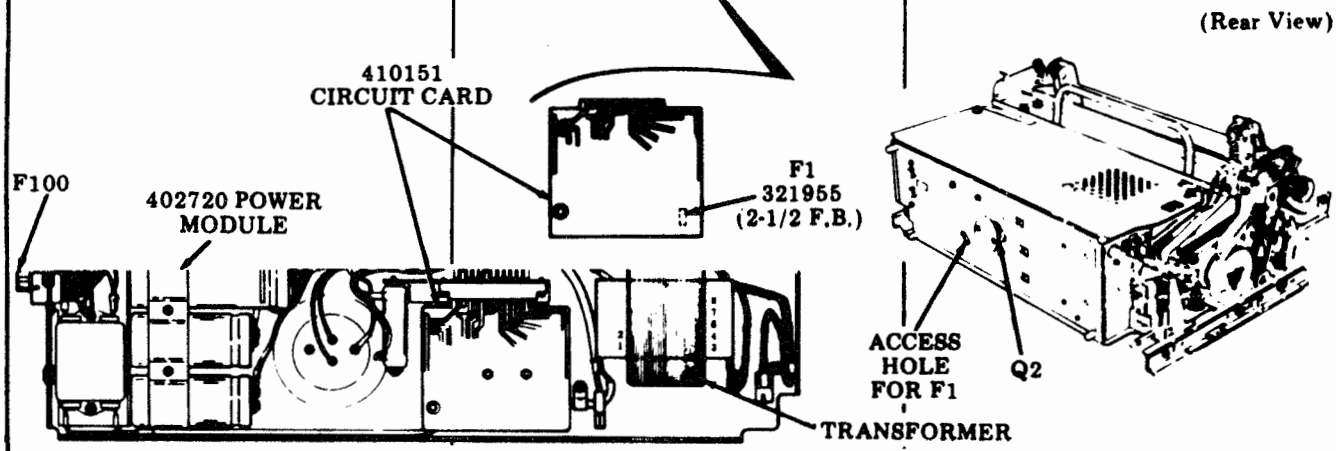

ANALYSIS QUESTION	"YES" RESPONSE DIRECTIVE	"NO" RESPONSE DIRECTIVE
15. Operate printer Test switch to On. Does the TEST lamp on 408646 test assembly light?	Go to 16.	Replace 402861 Test switch.
16. Operate the 402779 line cord with switch to Off. Disconnect P100 plug from 410155 circuit card assembly. Operate the 402779 line cord with switch to On. Measure 117 V ac between terminals 2 and 3 on P100 connector. Is 117 V ac present?	Operate 402779 line cord with switch Off. Go to 17.	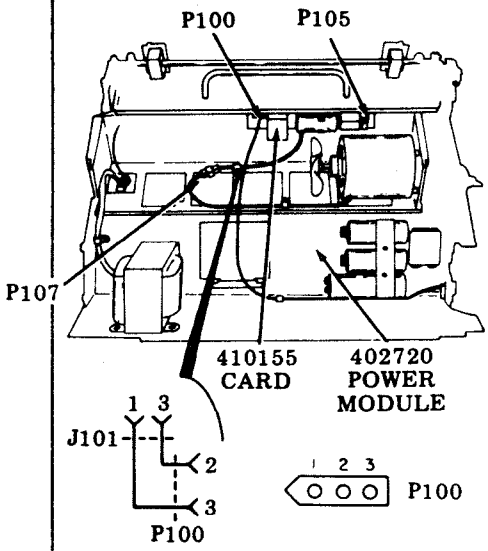 Check wiring from J101 terminals 1 and 3 to P100 terminals 3 and 2.
17. Reconnect P100. Disconnect P105 plug. Operate 402779 line cord with switch to On. With a volt-ohmmeter, check for -24 V dc between terminals 1 and 3 on P105. 1 2 3 P105 Is -24 V dc present?	Operate 402779 line cord with switch Off. Go to 18.	Check wiring from P105 terminals 1 and 3 to P109 terminals 5 and 6. 1 3 P105 P109 5 6
18. Reconnect P105. Disconnect P107 on the motor control assembly. Operate 402779 line cord with switch to On.	Operate 402779 line cord with switch Off. Go to 19.	Replace 410155 circuit card assembly.

C. COMPONENT ANALYSIS (Contd)

7. PRINTER -- 132-COLUMN TRACTOR FEED (Contd)

ANALYSIS QUESTION	"YES" RESPONSE DIRECTIVE	"NO" RESPONSE DIRECTIVE
18. (Cont) With a volt-ohmmeter, check for 115 V ac between terminals 1 and 2 and between 2 and 3 on P107. Is 115 V ac present?	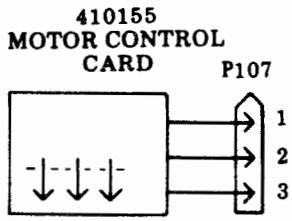	
19. Reconnect P107. Disconnect J117 connector from power module. Operate 402779 line cord with switch to On. Measure 14 V ac between terminals 1 and 3 and between terminals 3 and 5 on P117 connector. Is 14 V ac present?	Go to 20. 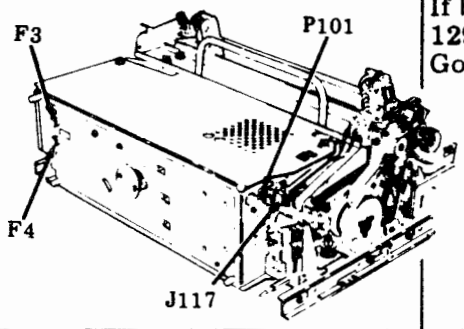	Check F3 and F4 fuses. If blown, replace with 129919 fuse, 4.0A SL-BL. Go to 20.
20. Measure 9.2 V ac between terminals 2 and 3 and between terminals 3 and 4 on P117 connector. Is 9.2 V ac present?	Reconnect J117. Operate 402779 line cord with switch to Off. Go to 21.	Replace 402720 power module.
21. Disconnect P107. With an ohmmeter, measure the following resistances between the indicated terminals on J107 connector: <u>402402 Motor — General Electric</u> Terminal 1 to 2 — 33 ohms Terminal 1 to 3 — 45 ohms Terminal 2 to 3 — 12 ohms (All readings ± 10%) <u>402402 Motor — Robbins & Myers</u> Terminal 1 to 2 — 19 ohms Terminal 1 to 3 — 30 ohms Terminal 2 to 3 — 11 ohms (All readings ± 10%) Are measured resistances correct?	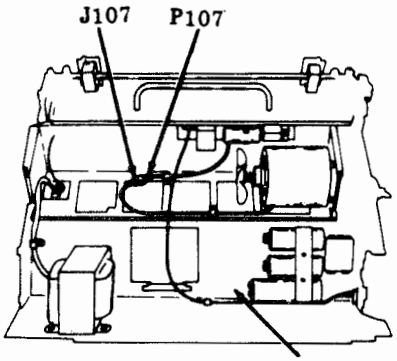 (Rear View) 402720 POWER MODULE 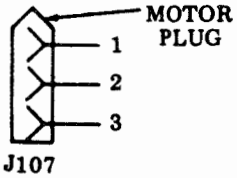 Replace entire printer.	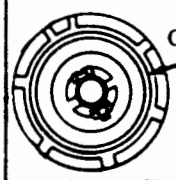 (Left Side View) (Left Side View) Replace 402402 motor.

ANALYSIS QUESTION	"YES" RESPONSE DIRECTIVE	"NO" RESPONSE DIRECTIVE
22. Is the impeller shaft being driven?	Go to 23. 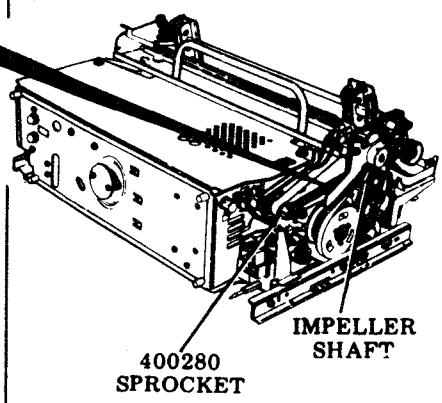	Check the 400631 impeller shaft drive belt. Replace if worn or broken. Check the 400280 motor shaft sprocket. Replace if worn or broken.
23. Does printer line feed properly with Test switch On? Failure symptoms are: No line feed Intermittent line feed Continuous line feed. 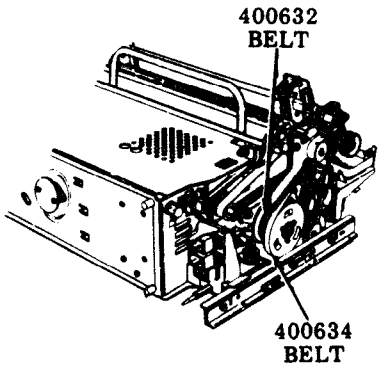	Go to 27. 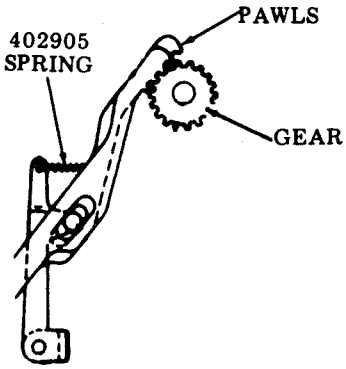 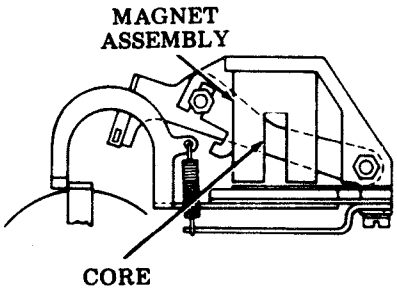	Check 400634 or 400632 line feed belts. Replace if worn or broken. Check line feed pawls for engagement with gear. Check line feed bail spring. Replace if broken or worn. Check loose mounting of line feed magnet assembly on its core. Replace 402621 line feed assembly if magnet coil is loose. Go to 24.

C. COMPONENT ANALYSIS (Contd)

7. PRINTER -- 132-COLUMN TRACTOR FEED (Contd)

ANALYSIS QUESTION	"YES" RESPONSE DIRECTIVE	"NO" RESPONSE DIRECTIVE
24. Remove 410072 (or 410729) circuit card. Connect 408646 test assembly as shown. *Caution: Observe caution label on 408648 cable when connecting plug to P109.* Operate 402779 line cord with switch to On. Operate MTR switch on 408646 test assembly to On. Operate LF switch on 408646 test assembly to On. Does the printer line feed?	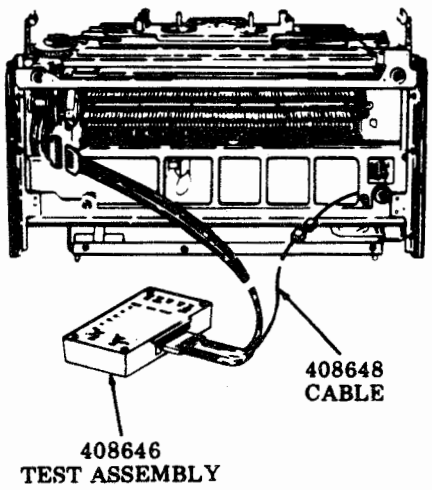 Operate 402779 line cord with switch Off. Replace 410072 (or 410729) circuit card. After the card is installed, check the Impeller Shaft Sensor and Flag Sensor adjustments; remake if necessary.	Go to 25.
25. Check for -24 V dc±1% between TP2 and TP3 on 408646 test assembly. Is -24 V dc±1% present?	Go to 26. 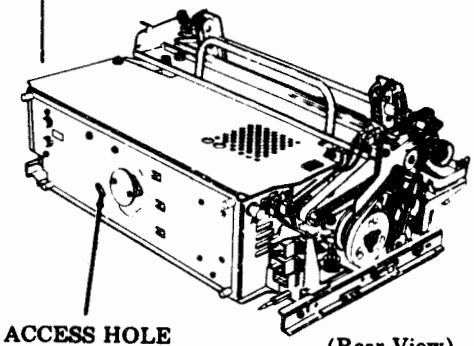	Refine -24 V dc adjustment, if voltage reading is outside tolerances. Replace 410151 circuit card.

ANALYSIS QUESTION	"YES" RESPONSE DIRECTIVE	"NO" RESPONSE DIRECTIVE
26. Operate the 402779 line cord with switch Off. Disconnect J109 test cable from printer. Measure for 33 ohms resistance at P109 between terminals 1 and 4. Is measured resistance correct?	Check the following adjustments: Clutch Shoe Release Arm Line feed Armature Gap Line Feed Bar Eccentric and Drive Belt Tension Clutch Drive Belt Tension Replace 402660 paper handling assembly.	Replace 402621 line feed magnet assembly. P109
27. Place printer LF1 — LF2 switch to position LF2. Does the printer double line space properly?	Go to 29.	Go to 28.
28. Remove 410072 (or 410729) circuit card from printer. Connect 408646 test assembly as shown. *Caution: Observe caution label on 408648 cable when connecting plug to P109 connector.* Operate 402779 line cord with switch On. Does the LINE FEED lamp on 408646 test assembly light?	Replace 410072 (or 410729) circuit card. After the card is installed, check the Impeller Shaft Sensor and Flag Sensor adjustments; remake if necessary.	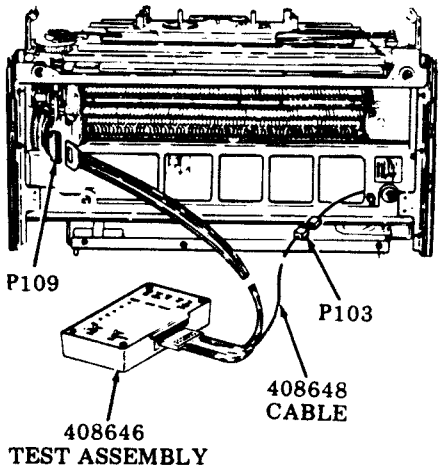 Replace 402861 switch. 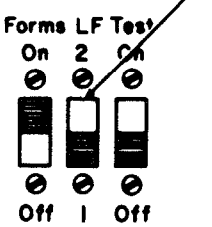

C. COMPONENT ANALYSIS (Contd)

7. PRINTER -- 132-COLUMN TRACTOR FEED (Contd)

ANALYSIS QUESTION	"YES" RESPONSE DIRECTIVE	"NO" RESPONSE DIRECTIVE
29. Is the ribbon feed mechanism operating properly? Ribbon spools rotating. Ribbon reverse working. No ribbon foldover. *Note:* To check ribbon reversing, manually operate the reversing arms with printer operating (printer Test switch On).	Go to 30.	Check ribbon drive belt. Replace if worn or broken. 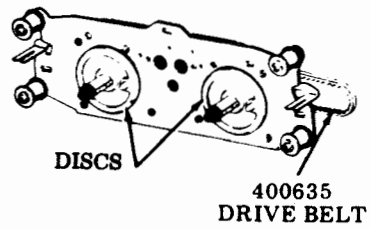 Remove ribbon mechanism and check the following springs. Replace if broken. 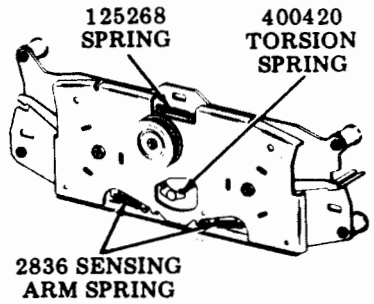 Replace 402420 ribbon mechanism. Check the Ribbon Tracking adjustment.
30. Are any characters being printed? 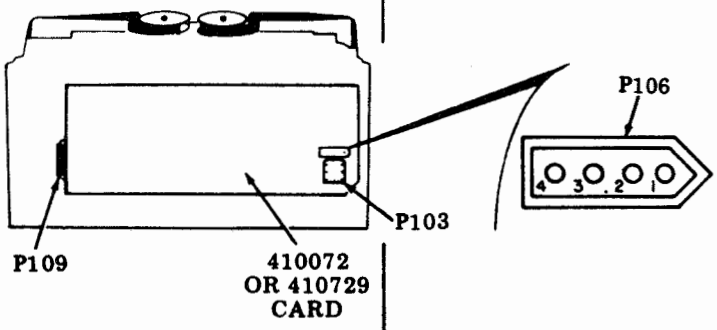 	Go to 31.	Check the following adjustments: Impeller Shaft Sensor Gap Flag Sensor Gap Check impeller sensor for a maximum of 145 ohms. Measure at P106 between terminals 1 and 2. Check flag sensor for a maximum of 145 ohms. Measure at P106 between terminals 3 and 4. Replace 400615 sensor, if open or resistance exceeds maximum requirement.

ANALYSIS QUESTION	"YES" RESPONSE DIRECTIVE	"NO" RESPONSE DIRECTIVE
30. (Cont)		Replace 410072 (or 410729) circuit card. After the card is installed, check the Impeller Shaft Sensor and Flag Sensor adjustments; remake if necessary.
31. Is the carrier font symbol the only symbol printed? Font symbols: A D Up-Low A J Monocase etc.	Go to 32.	If ! (exclamation) or _ (underline) are printed, check the following adjustments: Flag Sensor Gap Impeller Shaft Sensor Gap Flag Sensor (Final) Replace the 410072 (or 410729) circuit card. After the card is installed, check the Impeller Shaft Sensor and Flag Sensor adjustments; remake if necessary.
32. Are any columns not printing?	Go to 33.	Go to 37.
33. Are any of the following groups of columns missing? 1—12 13—24 25—36 37—48 49—60 61—72 73—84 85—96 97—108 109—120 121—132	Replace 410072 (or 410729) circuit card. After the card is installed, check the Impeller Shaft Sensor and Flag Sensor adjustments; remake if necessary.	Go to 34.

C. COMPONENT ANALYSIS (Contd)

7. PRINTER -- 132-COLUMN TRACTOR FEED (Contd)

ANALYSIS QUESTION	"YES" RESPONSE DIRECTIVE	"NO" RESPONSE DIRECTIVE
34. Of the columns that are missing, are they all odd-numbered (example: 1, 3, 19, 71) or are they all even-numbered (example: 2, 8, 42, 68)?	Check the position of the anti-freeze strip. Check for oil on antifreeze strip. If present, spray with 337449 Degreaser (Freon TF). 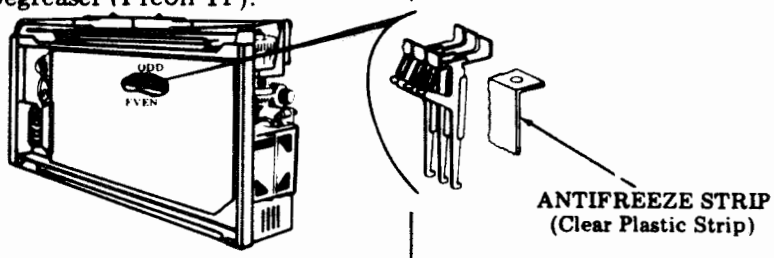 If antifreeze strip is distorted or missing, replace entire printer.	Go to 35.
35. Are one or more columns missing?	Check the following adjustments: Impeller Shaft Sensor Gap Flag Sensor Gap Impeller Shaft Sensor (Final) Replace 410072 (or 410729) circuit card. After the circuit card is installed, check the Impeller Shaft Sensor and Flag Sensor adjustments; remake if necessary. Replace entire printer.	Go to 36.
36. Are any characters not printed?	Check type carrier for missing pallets. Replace type carrier. Replace 410072 (or 410729) circuit card. After the circuit card is installed, check the Impeller Shaft Sensor and Flag Sensor adjustments; remake if necessary.	Place printer in service.

ANALYSIS QUESTION	"YES" RESPONSE DIRECTIVE	"NO" RESPONSE DIRECTIVE
37. Is the font symbol clipped on the left or right?	Check the Impeller Shaft to Carrier Phasing — Final adjustment.	Go to 38.
38. Are adjacent characters in the type carrier printed in place of the proper character (T instead of S, B instead of A, etc)?	Check the following adjustments: Flag Sensor Gap Impeller Shaft Sensor Gap Check that pallets and flags are in proper position. Type Carrier — Flag Position 400777AG — 68, 164, 260 400780AL — 4, 68, 132, 164, 228 400783AM — 68, 164, 260 400887AS — 4, 68, 132, 164, 228 408271AX — 20, 68, 116, 164, 212, 260 Replace entire printer.	Go to 39.
39. Is copy free of horizontal ink smudges caused by the ribbon rubbing against the paper?	Go to 40.	Replace 402686 ribbon shield if deformed. Check the following adjustments: Ribbon Guide (Final) Paper Positioner
40. Is copy free of double print or ghost images?	Go to 41.	Check the following adjustments: Left Carrier Sprocket Right Carrier Sprocket Check that type pallets are seated properly in carrier. Seat pallets with 402878 gauge. Replace type carrier. Replace entire printer.

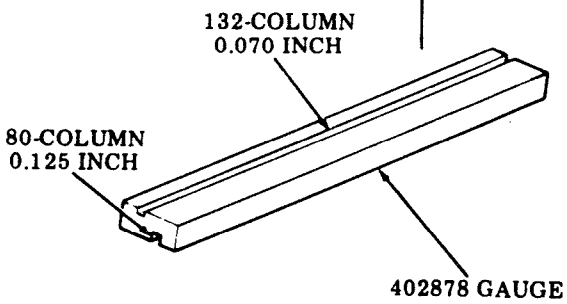

C. COMPONENT ANALYSIS (Contd)

7. PRINTER -- 132-COLUMN TRACTOR FEED (Contd)

ANALYSIS QUESTION	"YES" RESPONSE DIRECTIVE	"NO" RESPONSE DIRECTIVE
41. Is the printed copy clear and easily readable?	Go to 42.	Replace 402444 ribbon. Check the following adjustments: Backup Bar (Final) Left Carrier Sprocket Right Carrier Sprocket Ribbon Guide (Final) Paper Positioner
42. Is printed copy free from embossing (especially noticeable on characters such as hyphen or underline)?	Go to 43.	Check the Backup Bar (Final) adjustment and type carrier pallet alignment. 400777AG Tractor 132-Column — Up-Low (ASCII) 400780AL Tractor 132-Column — Monocase (ASCII) 400783AM Tractor 132-Column — Up-Low (EBCDIC) 400887AS Tractor 132-Column — Monocase (EBCDIC) 408271AX Tractor 132-Column — 48-Character Set Check that type pallets are seated properly in carrier. Seat pallets with 402878 gauge. Replace type carrier.
43. Is the print density uniform throughout the line without gradual variations?	Go to 44.	Check the following adjustments: Left Carrier Sprocket Right Carrier Sprocket Backup Bar
44. Is the print density uniform throughout the line without random variations?	Go to 45.	Check the following adjustment: Paper Positioner Replace entire printer.
45. Are the bottoms of characters printed clearly (not light) at both ends of the line?	Go to 46.	Check the following adjustments: Left Carrier Sprocket Right Carrier Sprocket Replace printer.

ANALYSIS QUESTION	"YES" RESPONSE DIRECTIVE	"NO" RESPONSE DIRECTIVE
52. Operate 402779 line cord with switch Off. Remove 410072 (or 410729) circuit card. Connect 408646 test assembly as shown. *Caution: Observe caution label on 408648 cable when connecting P109 plug.* Operate the 402779 line cord with switch to On. Does the FORMS SUPPLY lamp on the 408646 test assembly light (paper in)? Remove paper. Does the FORMS SUPPLY lamp go out and the ALARM lamp light (paper out)?	Replace 410072 (or 410729) circuit card. After the circuit card is installed, check the Impeller Shaft Sensor and Flag Sensor adjustments; remake if necessary. 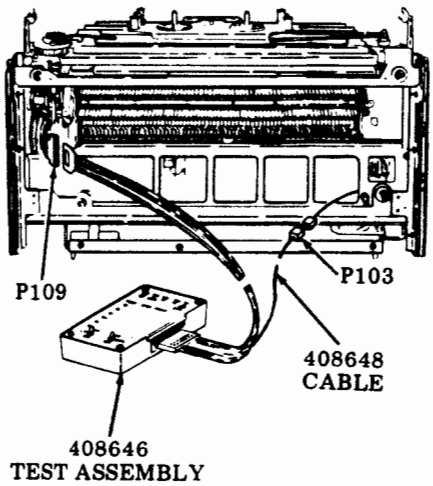 	Replace 402510 paper-out switch. 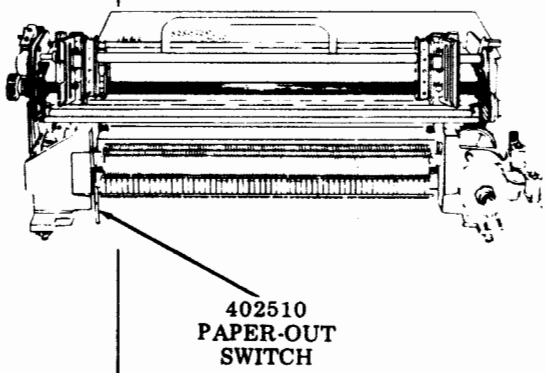

C. COMPONENT ANALYSIS (Contd)

8. CONTROLLER

The use of Controller Arrangement Forms is necessary to troubleshoot using self-test. Refer to Page 3-4 through 3-8 CONTROLLER ARRANGEMENT FORMS.

Sample Controller Arrangement Form

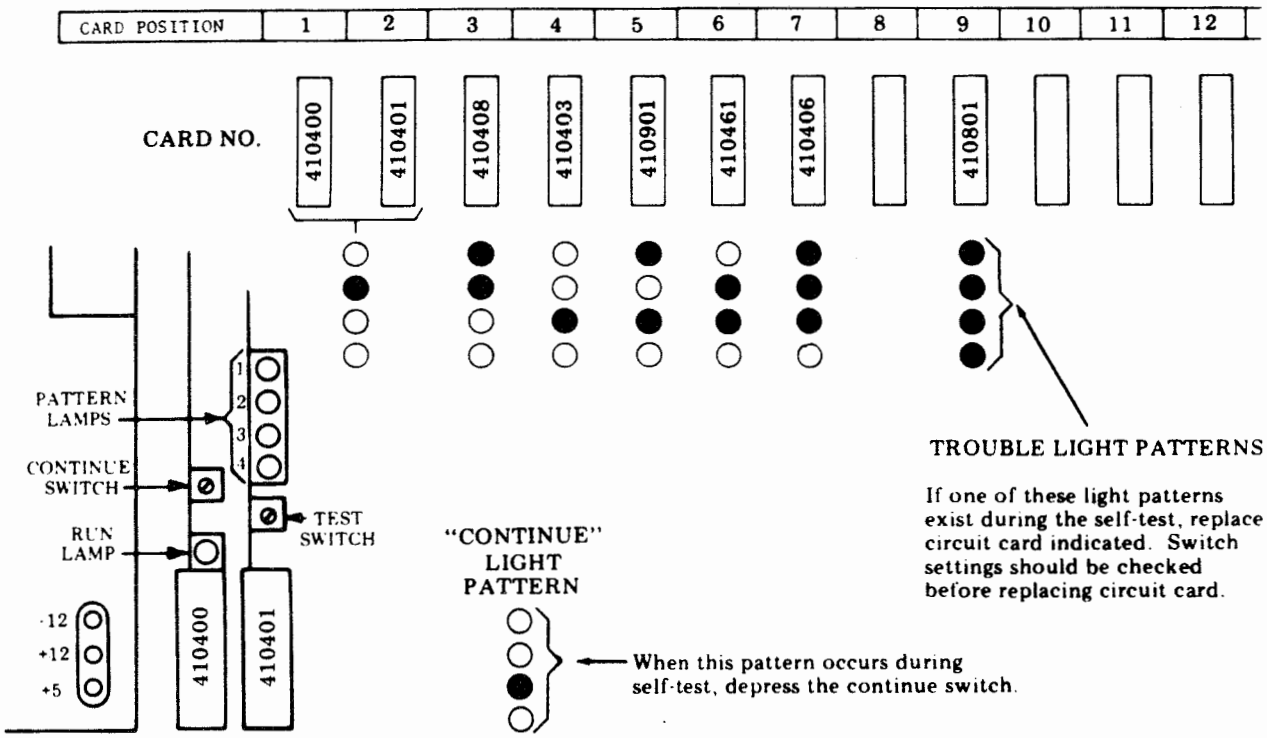

ANALYSIS QUESTION	"YES" RESPONSE DIRECTIVE	"NO" RESPONSE DIRECTIVE
1. Do all three voltage indicators light on power supply when power is turned on?	Go to 2.	Go to Page 4-5, 1. 40PSU103 POWER SUPPLY.
2. Depress and hold test switch. Do all pattern and run lamps light?	Go to 4.	Go to 3.
3. Do correct voltages appear at power supply output terminals? Refer to Page 4-5, 1. 40PSU103 POWER SUPPLY for voltages.	Go to 4.	Go to Page 4-5, 1. 40PSU103 POWER SUPPLY.

ANALYSIS QUESTION	"YES" RESPONSE DIRECTIVE	"NO" RESPONSE DIRECTIVE
4. Replace 410401 circuit card in slot 2 of controller. Depress test switch. Do all pattern lamps and run lamp light?	Go to 7.	Go to 5.
5. Replace 410400 circuit card in slot 1 of controller. Depress test switch. Do all pattern lamps and run lamp light?	Go to 7.	Go to 6.
6. Remove remaining cards one at a time. After each card is removed, push test switch to see if all pattern lamps and run lamp light. Replace defective card and go to 7.	Go to 7.	Go to 7.
7. Release test switch. Controller will automatically run self-test. Does a trouble light pattern appear on pattern lamps?	Go to 8.	Go to 10.
8. Before removing circuit card indicated by trouble light pattern, be sure card is properly seated in card connector. Does trouble light pattern repeat when test is run again?	Go to 9.	Go to 10.
9. Remove circuit card indicated by trouble light pattern. Check setting of address switches on card. Refer to Page 3-4 thru 3-8 CONTROLLER ARRANGEMENT FORMS for appropriate form. Were switch settings correct?	Replace circuit card.	Correct switch settings and retest.

C. COMPONENT ANALYSIS (Contd)

8. CONTROLLER (Contd)

ANALYSIS QUESTION	"YES" RESPONSE DIRECTIVE	"NO" RESPONSE DIRECTIVE
10. Does controller arrangement have continue light pattern? Refer to Page 3-4 thru 3-8, CONTROLLER ARRANGEMENT FORMS. Does continue light pattern appear on pattern lamps?	Push continue switch. Go to 11.	Go to 11.
11. Does set have a display monitor?	Go to 12.	
12. Does display pattern appear on display monitor? Refer to Page 3-3, Step 4 for pattern.	Go to 13.	Go to 31.
13. Does set have a full opcon?	Go to 14.	
14. In keyboard display mode, do characters generated on opcon appear on display?	Go to 16.	Go to 15.
15. Do SSI signals appear at posts 13, 14, 15, and 16 (opcon SSI) of 410157 circuit card on right wall of controller?	Check wiring to opcon. Refer to WDPs supplied with set. (Continuity test) Go to 29.	Replace 410406 circuit card in slot 4. Replace 410157 circuit card.

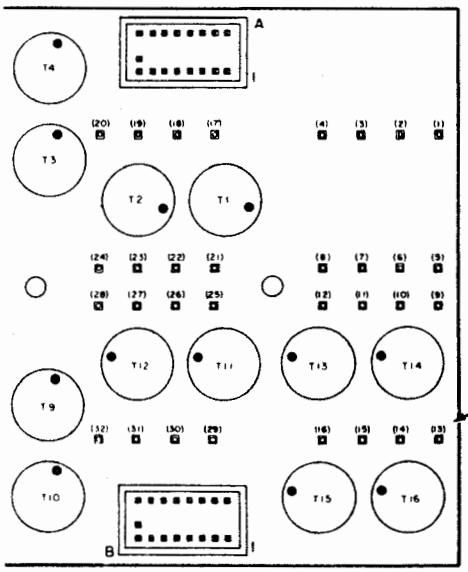

410157 Circuit Card

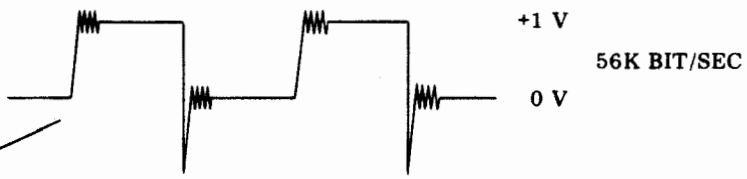

ANALYSIS QUESTION	"YES" RESPONSE DIRECTIVE	"NO" RESPONSE DIRECTIVE
16. On sets with printers, can information on display be transferred to printer by depressing PTR LCL? (Place ETX at end of message, home cursor, depress PTR LCL, DISP SEND, and DISP LCL.)	Go to 18.	Go to 17.
17. Do SSI signals appear at posts 9, 10, 11, and 12 (printer SSI) of 410157 circuit card on right wall of controller? 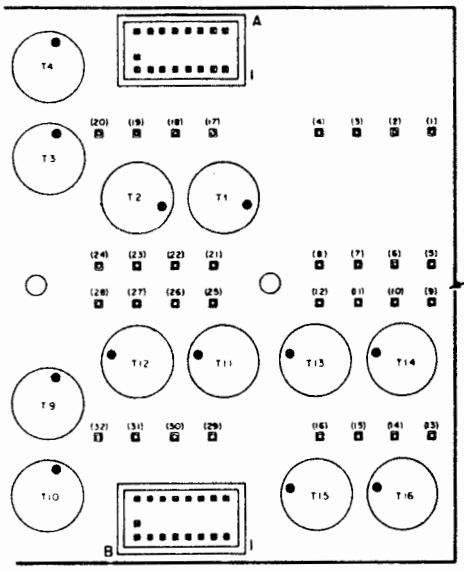 410157 Circuit Card 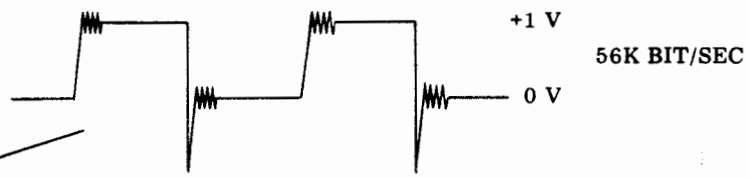	Check wiring to printer. Refer to WDPs supplied with set. (Continuity test)	Replace 410406 circuit card in slot 4. Replace 410157 circuit card.
18. On KDPM3 Sets, when in control mode, do block numbers appear for send, receive and monitor tape block numbers?	Go to 20.	Go to 19.
19. Do SSI signals appear at posts 29, 30, 31 and 32 (send cassette), and 25, 26, 27 and 28 (receive cassette), and 21, 22, 23 and 24 (monitor cassette) of 410157 circuit card mounted on right wall of controller?	Check wiring to each cassette drive (continuity check). Refer to wiring diagrams supplied with set.	Replace 410406 circuit card in slot 4 for send and receive cassettes. Replace 410406 circuit card in slot 5 for monitor cassette. Replace 410157 circuit card.

C. COMPONENT ANALYSIS (Contd)

8. CONTROLLER (Contd)

ANALYSIS QUESTION	"YES" RESPONSE DIRECTIVE	"NO" RESPONSE DIRECTIVE
19. (Cont) 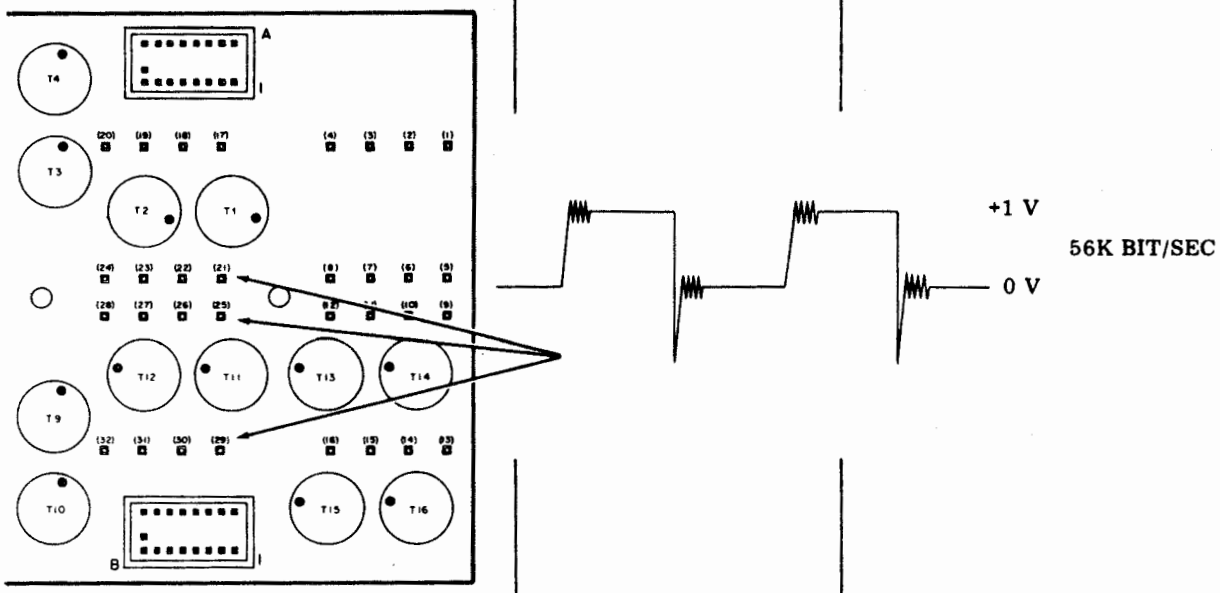 410157 Circuit Card		
20. Can messages be sent from display to receive tape locally? ①Prepare message ending with ETX. ②Home cursor. ③Depress REC TAPE LCL. ④Depress DISP SEND. ⑤Depress DISP LCL. Check receive tape by listing receive tape heading and checking first 55 characters of message.	Go to 22.	Go to Page 4-110, 10. CASSETTE DRIVE.
21. Can message be transferred from send tape to display locally? ①Position send tape to a recorded block and select single message mode. ②DISP SEND lamp not lit. ③Depress DISP LCL. ④Depress SEND TAPE LCL.	Go to 22.	Go to Page 4-110, 10. CASSETTE DRIVE.

ANALYSIS QUESTION	"YES" RESPONSE DIRECTIVE	"NO" RESPONSE DIRECTIVE
22. Place set in manual on-line mode (POLL/SEL lamp not lit). If set is full duplex, temporarily add a strap between terminals 2 and 3 of TB101 in interface assembly. For this test, clear-to-send input must be turned on or temporarily remove 303181 circuit card in slot Z4 of interface assembly. If Option VI has been installed, the external bit clock will have to be turned on. ①Select keyboard on-line mode. ②Disp Rec (DISP SEND lamp not lit). ③Depress DISP LINE. ④Depress PTR LINE (if set has printer). ⑤Depress REC TAPE LINE (if set has cassette drive). Do characters generated on the keyboard appear on display printer and receive tape?	Place in service: ①Remove strap on TB101 if installed. ②Replace 303181 circuit card in slot Z4 of interface assembly if removed.	Go to 23.
23. When sending characters, do the send mark and space lamps on 410411 CIU circuit card flicker?	Go to 26.	Go to 24.
24. Is there approximately a +5 V dc signal at pin 5 of OCI5 on 410157 circuit card on right wall of controller? 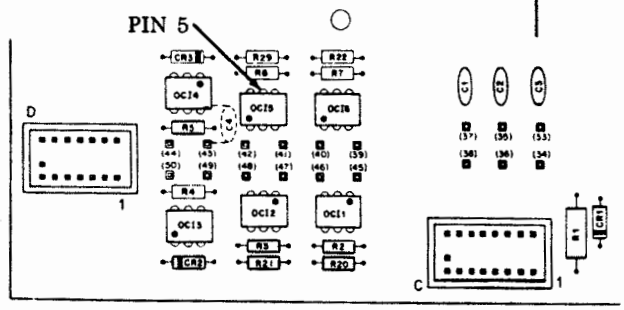 410157 CIRCUIT CARD	Replace 410411 circuit card.	If 303181 circuit card was removed from interface assembly, replace 410157 circuit card. If clear-to-send input to set was turned on, go to 25.

C. COMPONENT ANALYSIS (Contd)

8. CONTROLLER (Contd)

ANALYSIS QUESTION	"YES" RESPONSE DIRECTIVE	"NO" RESPONSE DIRECTIVE
25. Is there a 0 V dc signal at post 42 of 410157 circuit card? NOTE: When checking this signal, the scope or meter common should be connected to post 38.	Replace 410157 circuit card.	Check wiring to interface. Refer to 9617WD in WDP supplied with set. Go to Page 4-105, 9. INTERFACE.
26. Is there a 0 to +1.5 V dc inverted data signal at pin 1 of OCI4 on 410157 circuit card?	Go to 27.	Check cable to 410157 circuit card. Replace 410411 circuit card.
27. Is there a 0 to +1 V dc inverted data signal at post 43 of 410157 circuit card? NOTE: When checking this signal, the scope or meter common should be connected to post 38.	Go to 28.	Replace 410157 circuit card.
28. Is Option VI (Isochronous operation) installed in the set?	Go to 29.	Go to 31.
29. Is there an inverted bit clock signal (0 to 1.5 V dc) at post 45 (send clock) and post 40 (receive clock) of the 410157 circuit card?	Go to 30.	Check wiring to interface. Refer to 9617WD in WDP supplied with set. Go to Page 4-105, 9. INTERFACE.
30. Is there a bit clock signal (+5 V to -5 V) at pin 5 of OCI1 (send clock) and pin 5 of OCI6 (receive clock) on the 410157 circuit card?	Go to 31.	Replace the 410157 circuit card.
31. When sending a character, do the receive mark and space lamps on 410411 CIU circuit card flicker?	Replace 410411 circuit card.	Go to 32.

ANALYSIS QUESTION	"YES" RESPONSE DIRECTIVE	"NO" RESPONSE DIRECTIVE
32. Is there a 0 to +1.5 V dc inverted character signal at post 47 of 410157 circuit card?	Go to 33.	Check wiring in interface. Refer to 9619WD in WDP supplied with set. Go to Page 4-105, 9. INTERFACE.
33. Is there a -5 to +5 V dc character signal at pin 4 of OCI2 on 410157 circuit card?	Replace 410411 circuit card.	Replace 410157 circuit card.
34. Is there a +5 V dc signal at post J3 of 410555 circuit card mounted on right side of controller?	Go to 35.	Check wiring to back panel. Check 407548 cable assembly.
35. Are the following signals present at posts indicated below? Post J2 Video Post J4 Horiz Post J9 Vert	Check wiring to monitor.	Go to 36.

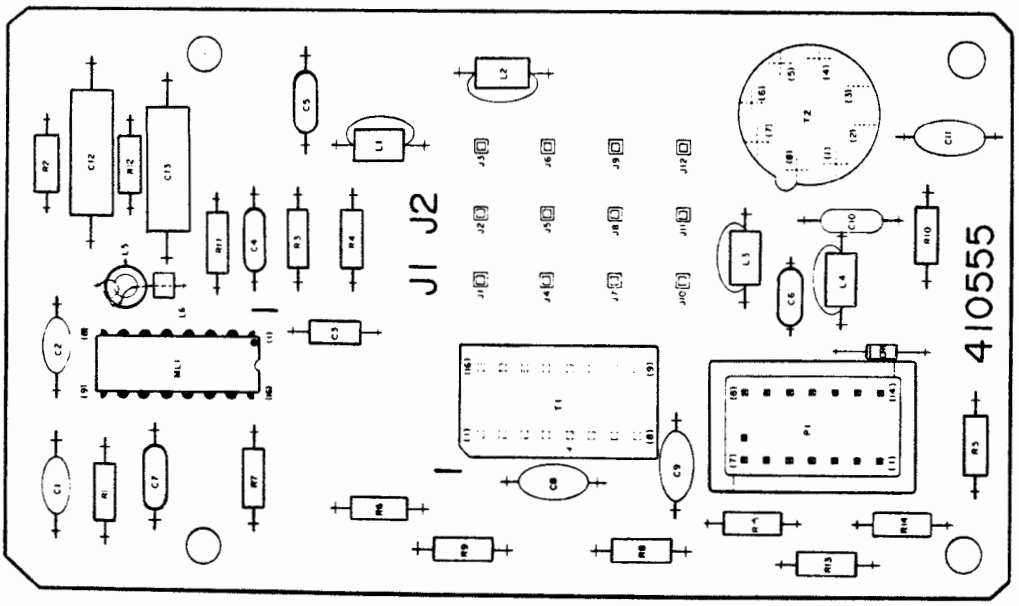

410555 Circuit Card

C. COMPONENT ANALYSIS (Contd)

8. CONTROLLER (Contd)

ANALYSIS QUESTION	"YES" RESPONSE DIRECTIVE	"NO" RESPONSE DIRECTIVE
36. Remove cable plugged into connector A of 410555 circuit card. Are the following signals present at pins of the cable indicated below? Pin 6 Video Pin 1 Horiz 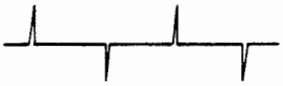 Pin 13 Vert	Replace 410555 circuit card.	Replace 410437 D I/O circuit card.

9. INTERFACE

ANALYSIS QUESTION	"YES" RESPONSE DIRECTIVE	"NO" RESPONSE DIRECTIVE
1. Is +7 V dc present at pins H and J of card in card connector Z2 with respect to pins N and P (circuit common) of that card connector?	Go to 2.	Go to 4.
2. Is -7 V dc present at pins L and M of card in card connector Z2 with respect to pins N and P (circuit common) of that card connector?	Go to 3.	Go to 4.
3. Is +9 to +11 V dc present at pin A of card in card connector Z6 with respect to circuit common?	Go to 15.	Go to 11.
4. Is +12 to +22 V dc present at pins A and B of card in card connector Z2 with respect to circuit common? Is -12 to -22 V dc present at pins E and F of card in card connector Z2?	Replace 303168 circuit card in card connector Z2.	Go to 5.
5. Are +12 to +22 V dc present at pins M and N and -12 to -22 V dc present at pins P and R of card in card connector Z1 with respect to circuit common?	Check wiring between card connectors Z1 and Z2. Refer to 9559WD in WDP0457.	Go to 6.
6. Is 28 to 42 V ac present between pins H and S of card in card connector Z1?	Replace 303169 circuit card in card connector Z1.	Go to 7.
7. Does F2 fuse check good? (Continuity test)	Go to 8.	Replace 143630 fuse.
8. Is 115 V ac present between connectors J101 and P103? (AC input to filter and transformer assembly)	Check wiring of filter and transformer assembly. Refer to 9559WD in WDP0457.	Go to 9.

C. COMPONENT ANALYSIS (Contd)

9. INTERFACE (Contd)

ANALYSIS QUESTION	"YES" RESPONSE DIRECTIVE	"NO" RESPONSE DIRECTIVE
8. (Cont)	Replace 366021 transformer. Replace 334187 inductor.	
9. Is 115 V ac present between terminals 4 and 5 of TB200 terminal block in ac compartment of interface?	Check wiring of FL100 and FL101 filters. Refer to 9559WD in WDP0457. Replace 402085 FL100 filter. Replace 402086 FL101 filter.	Go to 10.
10. Is 115 V ac present between terminals 1 and 2 of TB200 terminal block in ac compartment of interface?	Check wiring of CB1 circuit breaker. Refer to 9559WD in WDP0457. Replace 402026 CB1 circuit breaker.	AC power is not being supplied to set. Check external ac power circuit.
11. Is +9 to +11 V dc present at emitter of Q1 transistor mounted on heat sink of card connector frame?	Check wiring of card connector frame. Refer to 9559WD in WDP0457.	Go to 12.
12. Does F1 fuse check good? (Continuity test)	Go to 13.	Replace 143630 fuse.
13. Is approximately +13 V dc present at pins A and B of card in card connector Z1?	Check wiring to Q1 transistor. Replace 326594 Q1 transistor (2N3764).	Go to 14.
14. Is 13.5 to 18.5 V ac present between pins C and L of card in card connector Z1?	Replace 303169 circuit card in card connector Z1.	Go to 7.

ANALYSIS QUESTION	"YES" RESPONSE DIRECTIVE	"NO" RESPONSE DIRECTIVE
15. Is -7 V dc present at: Pin — Card Connector N and K — Z3 N — Z4 F — Z5 F — Z7 Is +7 V dc present at: Pin — Card Connector D — Z5 D — Z7 Is +9 to +11 V dc present at: Pin — Card Connector A — Z3 A — Z4 A — Z6	Go to 17.	Check wiring of card connector frame. Refer to 9559WD in WDP0457.
16. Is interface equipped with 303180 and 303181 circuit cards in card connectors Z3 and Z5?	Go to 17.	
17. Are bit clock signals (+6 V to -6 V shaped waveforms) present on terminals 1 and 3 of TB102 terminal block? If Option V.2. (asynchronous transmission mode) is optioned, go to 19.	Go to 18.	External clock is off to set. Check external clock circuit.
18. Does clock signal appear at pins C and L of card in card connector Z3? APPROX 1.5 V 0 V	Go to 19.	Check wiring to controller for shorts or opens. Refer to 9559WD in WDP0457 and 9575WD in WDP supplied with controller. Replace 303181 circuit card in card connector Z3.
19. Is a 303181 circuit card in card connector Z4?	Go to 20.	Go to 22.

C. COMPONENT ANALYSIS (Contd)

9. INTERFACE (Contd)

ANALYSIS QUESTION	"YES" RESPONSE DIRECTIVE	"NO" RESPONSE DIRECTIVE
20. Is +6 V dc present at terminal 4 of TB102 terminal block in interface?	Go to 21.	Clear-to-send signal is off to set. Check external clear-to-send circuit.
21. Is approximately +1.5 V dc present at pin L of card in card connector Z4?	Go to 22.	Check wiring to controller for shorts or opens. Refer to 9559WD in WDP0457 and 9575WD in WDP supplied with controller. Replace 303181 circuit card in card connector Z4.
22. Is +6 V dc present on terminal 7 of TB102 terminal block when TERM READY lamp on opcon is lit or paper in printer with cover closed, and in REC mode? If opcon does not have terminal ready lamp, go to 26.	Go to 24.	Go to 23.
23. Is voltage at pin M of card in card connector Z5 approximately 1 V dc or more?	Replace 303180 circuit card in card connector Z5.	Go to 24.
24. Depress TERM READY key on opcon or open printer cover. Does voltage on terminal 7 of TB102 terminal block change from +6 V dc to -6 V dc?	Go to 26.	Go to 25.
25. Is voltage at pin M of card in card connector Z5 less than +0.5 V dc?	Replace 303180 circuit card in card connector Z5.	Check wiring to controller.
26. Is +6 V dc present at terminal 5 of TB101 terminal block in interface?	Go to 27.	Receive line off or open. Check external receive line circuit.
27. Is half-duplex strap installed (strap between terminals 2 and 3 of TB101 terminal block) and is +6 V dc present at terminal 3? If no card in card connector Z7, go to 28.	Go to 28.	Remove half-duplex strap. Go to 28.

ANALYSIS QUESTION	"YES" RESPONSE DIRECTIVE	"NO" RESPONSE DIRECTIVE
28. Is approximately +1.5 V dc present at pin L of card in card connector Z6?	Go to 29.	Check wiring to controller. Refer to 9559WD in WDP0457 and 9575WD in WDP supplied with controller. Replace 303181 circuit card in card connector Z6. Replace half-duplex strap if removed.
29. Is there a circuit card in card connector Z7?	Go to 30.	Place interface in service.
30. Is +6 V dc present at terminal 2 of TB101 terminal block in interface?	Go to 32.	Go to 31.
31. Is approximately 1 V present at pin M of card in card connector Z7 when set is not sending?	Replace 303180 circuit card in card connector Z7.	Go to 32.
32. When a character is sent from the set, does voltage at terminal 2 of TB101 terminal block switch from +6 V to -6 V for mark to space bit transitions?	Place interface in service.	Check wiring to controller.

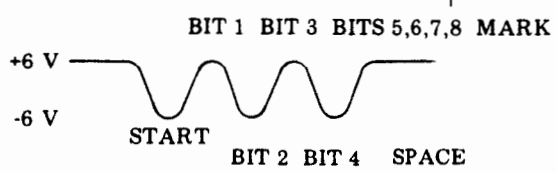

C. COMPONENT ANALYSIS (Contd)

10. CASSETTE DRIVE

ANALYSIS QUESTION	"YES" RESPONSE DIRECTIVE	"NO" RESPONSE DIRECTIVE
1. With the Cassette Drive power switch in the "ON" position, does motor run?	Go to 4.	Go to 2.
2. Is 115 volts available at source?	Go to 3.	Repair or replace voltage.
3. With motor connector removed from ac distribution assembly connector, is 115 V present at ac distribution assembly connector? 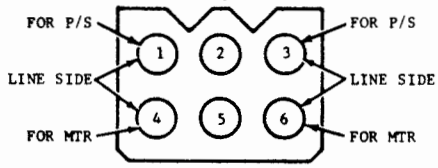	(a) Disconnect power supply from motor connector and replace motor. (b) Replace connector.	(a) Replace 408598 SSI/AC interface assembly. (b) Replace connector.
4. With no cassette in the cassette holder and power switch in the "ON" position, is the BOT/EOT lamp lit?	Go to 9.	Go to 5.
5. Is power supply fuse "open"? Check continuity.	Replace fuse, recheck. Recheck if fuse continues to "blow". Recheck power supply.	Go to 6.
6. Is -12 volts present at power supply? Check for -12 V dc between terminals marked common and -12.	(a) Replace 410764 logic card. (b) Replace Cassette Drive.	Go to 7.
7. Is transformer output voltage present (approx. 31.6 V ac) present between unmarked terminals on power supply circuit card?	(a) Replace 410043 power supply circuit board. (b) Replace 406101 power supply.	Go to 8.
8. Is transformer input voltage present (103 to 127 V ac) between pins 1 and 3 of connector P8?	Replace 406103 transformer.	Replace 408598 SSI/AC interface assembly.
9. Is Run (Status) Lamp lit?	Replace Cassette Drive.	Go to 10.

ANALYSIS QUESTION	"YES" RESPONSE DIRECTIVE	"NO" RESPONSE DIRECTIVE
10. Does Run (Status) lamp light when the "Cassette in Place" switch is manually activated?	Go to 13.	Go to 11.
11. Is +12 V dc present at power supply? Check for +12 V dc between terminals marked common and +12.	Go to 12.	(a) Replace power supply circuit board 410043. (b) Replace power supply 406101.
12. With power removed from the cassette drive, the cassette drive removed from its base, and plug P4 removed from the J4 connector, is there continuity between terminals 2 and 9 of plug P4? 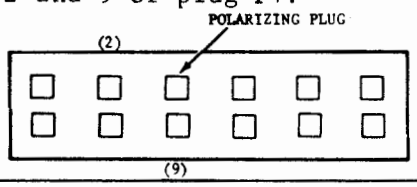 	(a) Replace 410764 logic card. (b) Replace Cassette Drive.	Replace Cassette Drive.
13. Does left drive shaft (Rewind) hub rotate when "Cassette in Place" switch is manually activated?	Go to 18.	Go to 14.
14. Does left drive shaft (Rewind) rotor rotate?	Go to 15.	Go to 18.
15. Is clutch activated when the "Cassette Drive" switch is actuated?	Replace Cassette Drive.	Go to 16.
16. Is clutch out of adjustment (see Section 5)?	Adjust clutch (see Section 5).	Go to 17.
17. With power removed from Cassette Drive, drive removed from base and the P4B connector disconnected, is resistance between terminals 3 and 8 of P4B 32 to 50 ohms?	Replace 410764 logic card.	Replace Cassette Drive.
18. Does right drive shaft (Forward Drive) rotor rotate?	Go to 19.	Go to 23.
19. Is O-Ring belt present?	Go to 20.	Assemble O-Ring belt.

C. COMPONENT ANALYSIS (Contd)

10. CASSETTE DRIVE (Contd)

ANALYSIS QUESTION	"YES" RESPONSE DIRECTIVE	"NO" RESPONSE DIRECTIVE
20. Are left Drive Shaft (Rewind) Pulley and Idler Pulley present?	Go to 21.	Assemble missing pulley/ pullies.
21. Are left Drive Shaft (Rewind) Pulley set screws (2) tight?	Go to 22.	Tighten set screws.
22. Does left Drive Shaft (Rewind) Pulley bind on casting?	Adjust for end play (see PART 5).	Replace Cassette Drive unit.
23. Is Motor Drive Belt present?	Go to 24.	Assemble Belt.
24. Are right Drive Shaft (Forward Drive) pulley set screws tight?	Go to 25.	Tighten set screws.
25. Are motor pulley set screws tight?	Go to 26.	Tighten set screws.
26. Does right Drive Shaft (Forward Drive) pulley bind on casting?	Adjust for end play (see PART 5).	Replace Cassette Drive unit.
27. With a partially unwound standard cassette placed wrong side out, is the cassette held flat against inside surface of the cassette holder?	Go to 28.	Adjust cassette pressure spring (see PART 5).
28. Is Cassette Holder properly latched (see PART 5)?	Go to 29.	Adjust latch (see PART 5).
29. Does the Left Drive (Rewind) shaft rotate?	Adjust "Cassette in Place Switch".	Go to 30.
30. When removing cassette does latch open too far?	Adjust latch stop screw (see PART 5).	Go to 31.
31. Is cassette holder ejected from drive mechanism?	Go to 32.	Adjust cassette holder Pressure Spring.
32. With the cassette properly assembled to the cassette holder, did the cassette rewind?	Go to 34.	Go to 33.

ANALYSIS QUESTION	"YES" RESPONSE DIRECTIVE	"NO" RESPONSE DIRECTIVE
33. With the cassette removed from the cassette holder, do both reels rotate freely?	Adjust "Cassette in Place" switch height.	Replace cassette.
34. After rewinding, does the tape move forward and rewind?	Go to 36.	(a) Cassette drive not plugged into mating equipment. (b) Go to 35.
35. With power switch in the off position, remove system cable from mating equipment connector and connect it to a known good part. Restore power to cassette drive, does tape move forward and rewind?	Replace or repair mating equipment. Restore Cassette Drive to proper configuration.	(a) Replace system cable. (b) Replace 408598 SSI/AC interface assembly. (c) Replace 410764 logic card. (d) Replace Cassette Drive.
36. Does tape move forward and reverse a second time?	Go to 38.	Go to 37.
37. Does cassette have red tab on left side folded back so that notch is exposed?	Go to 38.	(a) Adjust "Write Inhibit Switch" (see PART 5).
38. Does the Run (Status) lamp turn off or flash when tape is rewound?	Go to 41.	Go to 39.
39. Is the tape between the BOT/EOT sensor tube mechanism transparent?	Go to 40.	(a) Replace cassette. (b) Replace 410764 logic card. (c) Replace Cassette Drive, Sensing Tube bad.
40. Is the hole in the underside of the sensor tube over the BOT/EOT lamp?	(a) Replace 410764 logic card. (b) Replace Cassette Drive.	Replace Cassette Drive. Sensing tube out of adjustment.
41. Does the Run (Status) Lamp flash?	Go to 42.	Go to 43.

C. COMPONENT ANALYSIS (Contd)

10. CASSETTE DRIVE (Contd)

ANALYSIS QUESTION	"YES" RESPONSE DIRECTIVE	"NO" RESPONSE DIRECTIVE
42. Remove cassette and place in known good Cassette Drive. Does Run (Status) Lamp flash after moving forward and reversing when "Write Inhibit" tab is folded back (see Step 37) or after moving forward, reversing, moving forward again and reversing a second time for "Write Inhibit" tab not folded back?	Cassette bad - replace.	Go to 45.
43. With the Cassette Drive connected to a M40 KD or KDP capable of receiving from a Cassette Drive and using a cassette previously recorded on the Cassette Drive, can text be sent to the display?	Go to 44.	Go to 48.
44. Is text garbled?	Go to 45.	Cassette Drive good.
45. Replace the cassette used in Step 43 with a known properly recorded cassette - does garbling still occur?	Go to 46.	(a) Replace 410764 logic card. (b) Replace Cassette Drive.
46. Is the tape cleaner bobbin indexed as the cassette is inserted and removed?	Go to 47.	(a) Adjust bobbin latch spring. (b) Check bobbin ratchet spring requirement. (c) Check bobbin stepper spring requirement. (d) Replace tape cleaner bobbin.
47. Is "O" Ring Belt frayed?	Replace "O" Ring Belt 403289.	Go to 48.

ANALYSIS QUESTION	"YES" RESPONSE DIRECTIVE	"NO" RESPONSE DIRECTIVE
48. Is tape cleaner bobbin dirty?	Replace 403238 tape cleaner bobbin.	(a) Check Drive Belt adjustment. (b) Check "O" Ring Belt adjustment. (c) Clean recording head. (d) Clean clutch faces. (e) Clean brake faces. (f) Adjust clutches. (g) Adjust brakes. (h) Replace 410764 logic card. (i) Replace Cassette Drive.
49. Does associated display indicate Block Number *** or 000?	Cassette Drive good - mating equipment at fault.	(a) Replace System Cable. (b) Replace 408598 SSI/AC interface assembly. (c) Replace 410764 logic card.

PART 5 -- ADJUSTMENTS

INDEX

		PAGE
A.	GENERAL	5-1
B.	DISPLAY MONITOR	5-1
C.	PRINTER	5-10
D.	OPCON	5-60
E.	CASSETTE DRIVE	5-61
	1. GENERAL	5-61
	2. ASSEMBLIES	5-61
	3. CASSETTE HOLDER ADJUSTMENTS	5-63
	4. DRIVE MECHANISM ADJUSTMENTS	5-74
	5. 410764 CIRCUIT CARD ADJUSTMENT	5-78

A. GENERAL

Field adjustments of Tempest Model 40 Sets may be required upon installation or on maintenance calls. This manual includes all adjustments related to the monitor, opcon, cassette drives and printer adjustments that are considered to be "in-the-field" adjustments. No adjustments are required in the controller assembly.

B. DISPLAY MONITOR

The controls that affect the display on the monitor are shown. These controls are adjusted with the monitor in position, power applied, monitor cover removed, and the heat sink assembly lowered. See PART 6 -- COMPONENT ACCESS.

Before making any of the following electrical adjustments allow approximately 10 minutes of warmup time.

DANGER: OBSERVE ALL PRECAUTIONS TO AVOID ELECTRICAL SHOCK OR BREAKAGE OF THE CATHODE RAY TUBE (CRT). WEAR SAFETY GLASSES WHENEVER THE MONITOR HOUSING IS REMOVED.

NOTE: When ordering replaceable parts or components, unless otherwise specified, prefix each part number with the letters "TP" (ie, TP410055).

B. DISPLAY MONITOR (Contd)

NOTE: The number indicated in parentheses after each adjustment title designates the page covering the adjustment requirements and procedure.

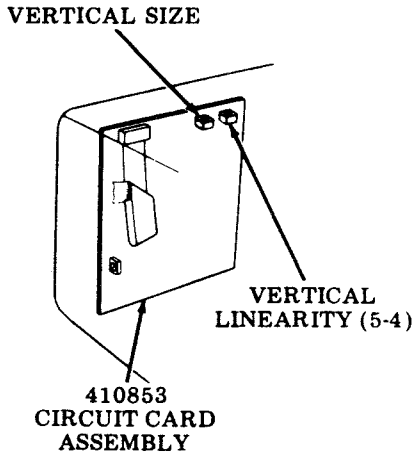

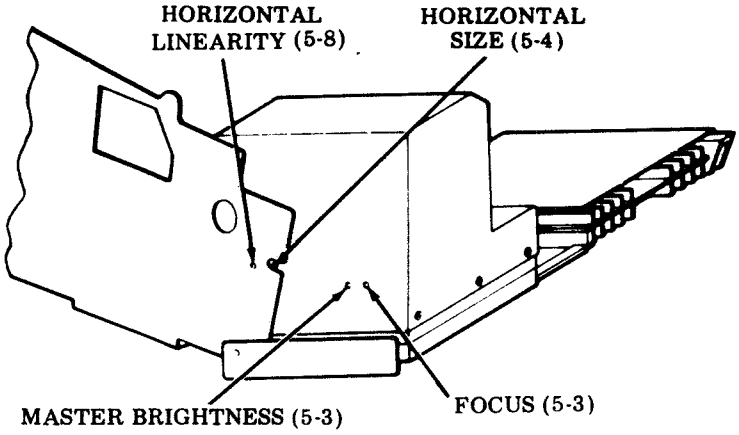

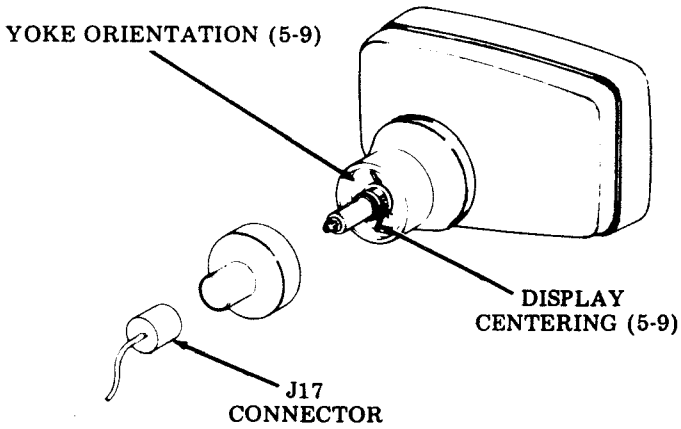

Most of the electrical adjustments require a test pattern on the display tube face consisting of the character "E" (or equivalent) in all positions around the perimeter of the display.

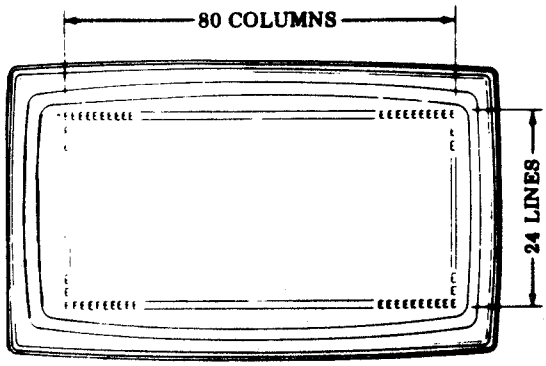

Display Test Pattern

MASTER BRIGHTNESS

Requirement

The raster (lighted rectangular background) shall be just visible with operator brightness control turned full counterclockwise to maximum intensity.

To Adjust

Rotate operator brightness control full counterclockwise for maximum intensity. Rotate master brightness potentiometer clockwise for darker; counterclockwise for brighter. Adjust for just visible raster.

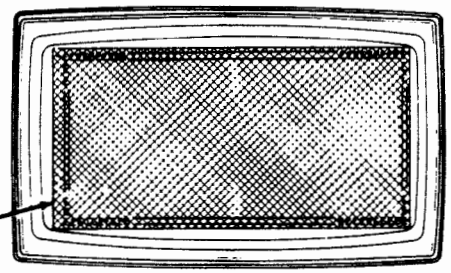

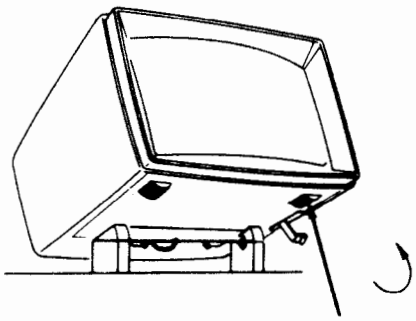

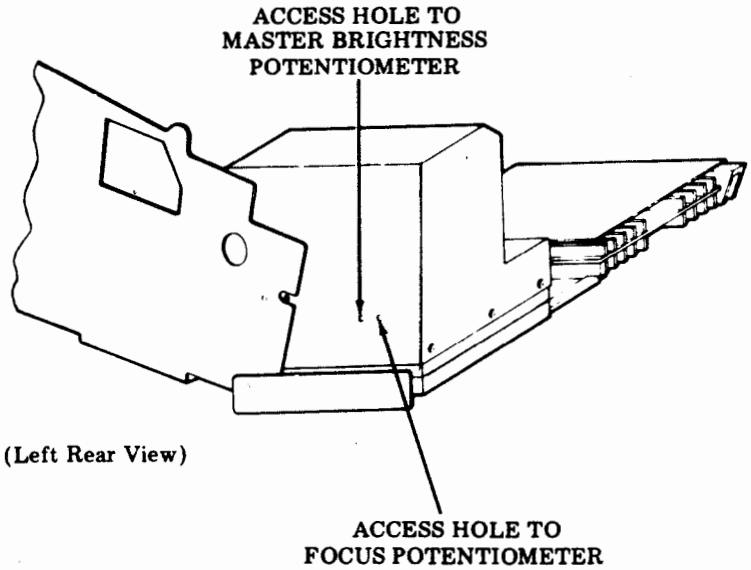

FOCUS

Requirements

The display characters should be well defined.

To Adjust

Rotate focus potentiometer to position giving sharpest display characters.

B. DISPLAY MONITOR (Contd)

VERTICAL SIZE

Requirement
The height of the 24 lines should be 5-1/4 inches ±1/8 inch.

To Adjust
Rotate vertical size potentiometer clockwise to decrease; counterclockwise to increase.

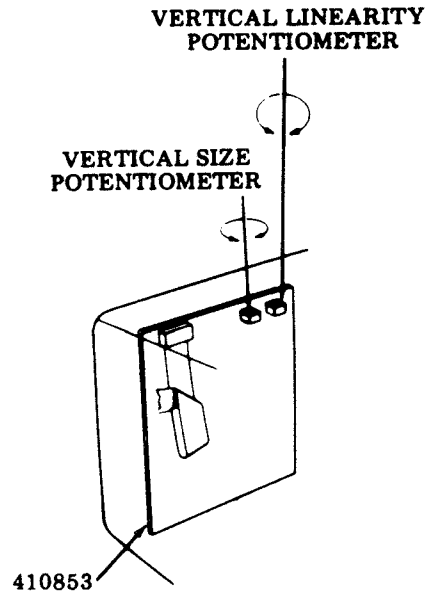

VERTICAL LINEARITY

Requirement
Character height should be uniform throughout the display.

To Adjust
Rotate vertical linearity potentiometer clockwise to decrease top row; counterclockwise to decrease bottom.

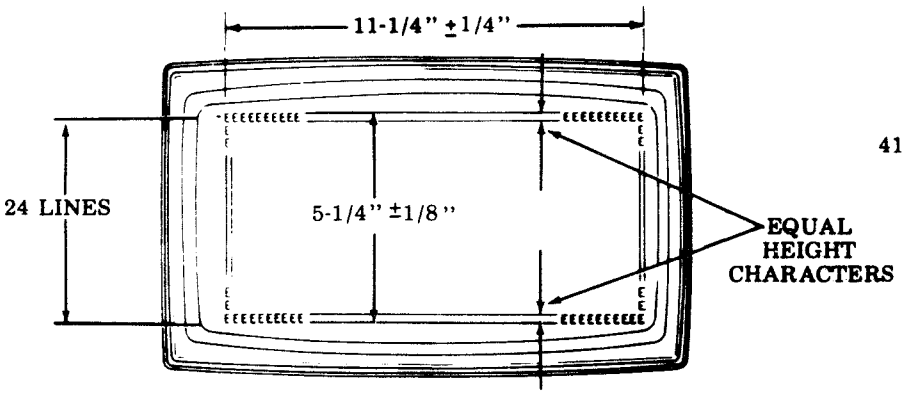

HORIZONTAL SIZE

NOTE: Use 405993 monitor adjusting tool to perform this adjustment.

Requirement
The width of 80 characters should be 11-1/4 inches ±1/4 inch.

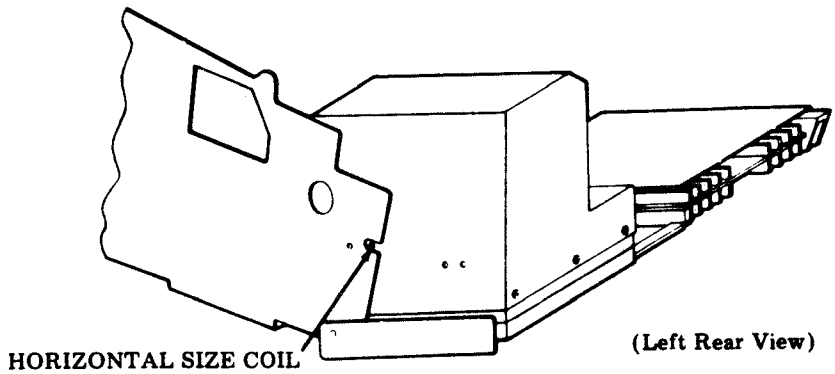

HORIZONTAL CENTERING ADJUSTMENT (NEW)

Requirement (TP410545 Issue 6A and later)

The space between the 80th character and the right edge of the raster shall be 1 to 1-1/2 character width (gauged by eye) after a three minute warm-up.

To Adjust

Rotate horizontal centering potentiometer.

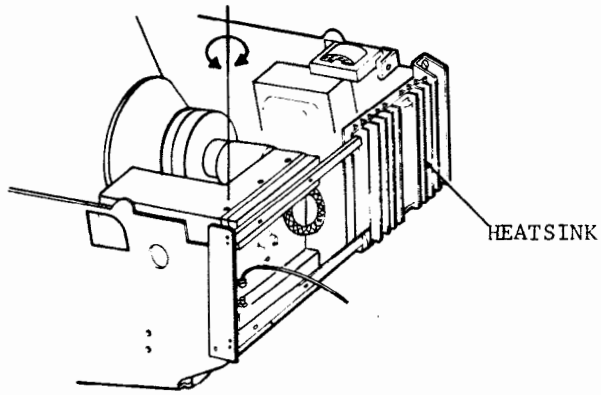

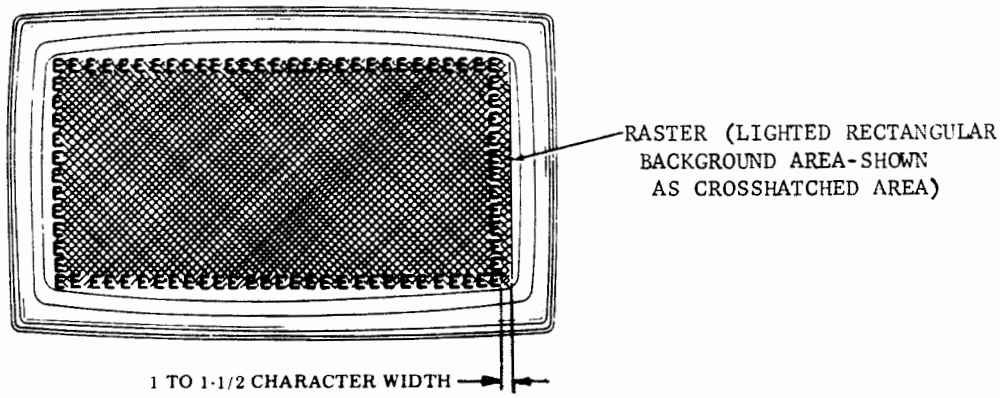

FOCUS ADJUSTMENT (REVISED)

Requirement

The display characters shall be well defined.

To Adjust

Rotate focus potentiometer to position giving sharpest display characters.

For TP410545 Issue 6A and later, if focus is unobtainable and sharpest setting of potentiometer is at counterclockwise extreme, cut strap ST immediately behind focus potentiometer R29 (DANGER: POWER DOWN FIRST), repeat MASTER BRIGHTNESS and FOCUS adjustments.

NOTES

① Turn off main power switch.

② Remove eight 152893 screws, 110743 lockwashers and 125011 flat washers.

③ Position high voltage plate so that there is an unobstructed view of the horizontal size and linearity coils on the 410546 circuit card.

WARNING: BE SURE THAT TERMINALS AND/OR FEED THROUGH FILTERS ON THE HIGH VOLTAGE PLATE ASSEMBLY ARE NOT TOUCHING THE COPPER ENCLOSURE.

④ Turn on main power switch.

⑤ Insert the 405992 adjusting tool through the access hole on the left side of the enclosure.

NOTE: On later design monitors, the horizontal drive cable is clamped to the high voltage plate assembly.

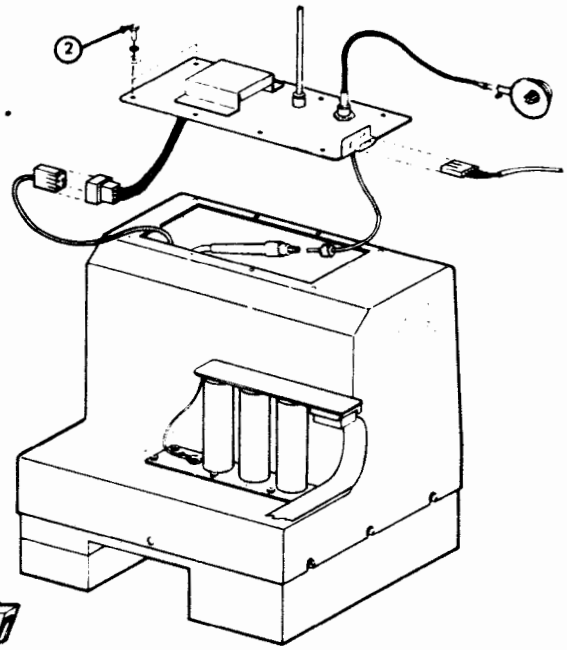

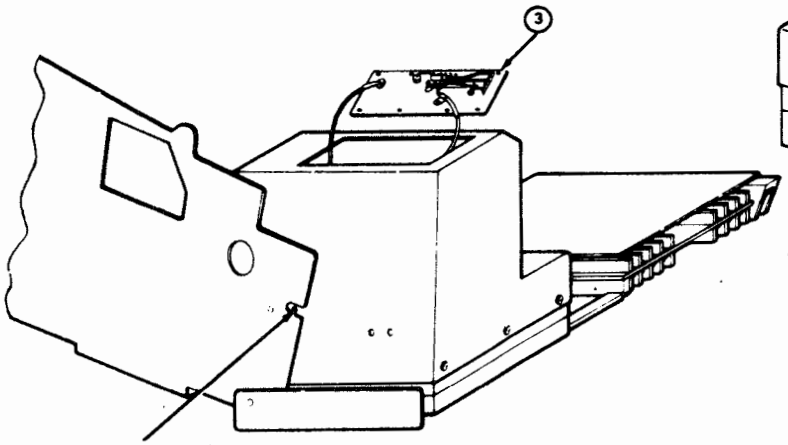

(Left Rear View)

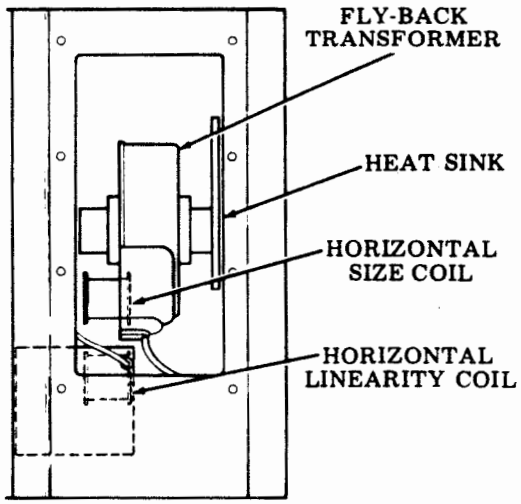

While viewing through the top opening of the enclosure, route the 405992 past the heat sink on the fly-back transformer and into the horizontal size coil.

DANGER: DO NOT PUT FINGERS INSIDE THE ENCLOSURE AND DO NOT TOUCH COMPONENTS ON HIGH VOLTAGE PLATE ASSEMBLY.

⑥ Adjust horizontal size of display to 11-1/4 inches ±1/4 inch.

⑦ Turn off main power switch.

⑧ Reassemble 405859 high voltage plate assembly by reversing the removal procedure.

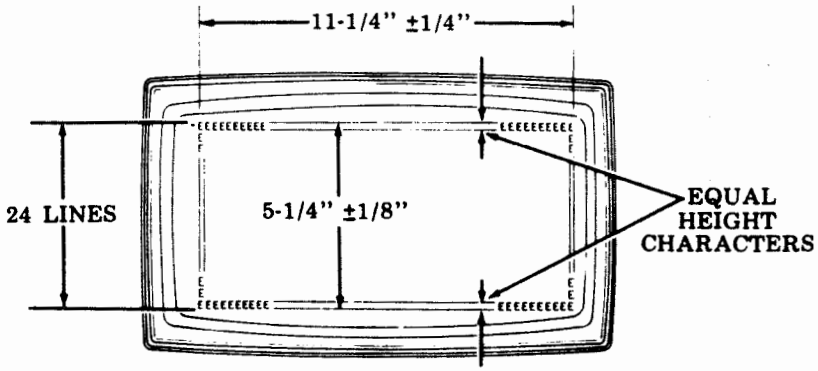

Horizontal Size

B. DISPLAY MONITOR (Contd)

Procedure for Access to Monitor Yoke and Centering Rings

① Turn main power switch off.

② Remove monitor cover.

③ Replace monitor P901 connector.

④ Release 1/4-turn fastener securing heat sink assembly and tilt heat sink assembly rearward.

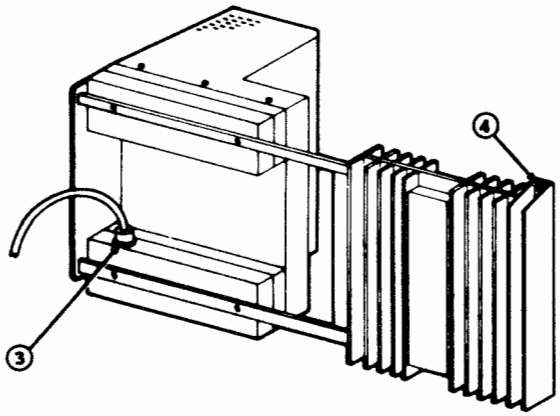

⑤ Using tube tilt mechanism, tilt tube face downward.

⑥ Carefully remove CRT J17 connector.

⑦ Carefully remove 402112 shield assembly.

⑧ Replace CRT J17 connector.

⑨ Turn main power switch on.

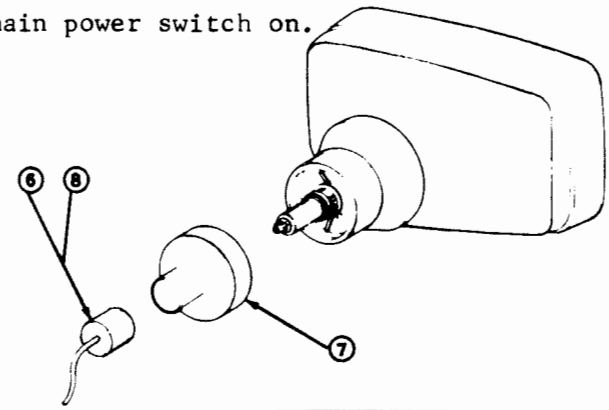

- To reinstall 402112 shield assembly reverse above procedure.

HORIZONTAL LINEARITY

Requirement
Character width shall be uniform throughout the display as gauged by eye.

To Adjust
Rotate horizontal linearity coil for uniform width characters. Check and refine (if necessary) HORIZONTAL SIZE adjustment.

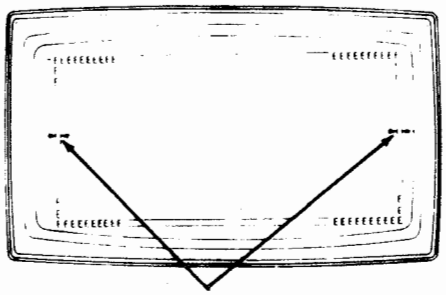

EQUAL WIDTH CHARACTERS
(Gauged by Eye)

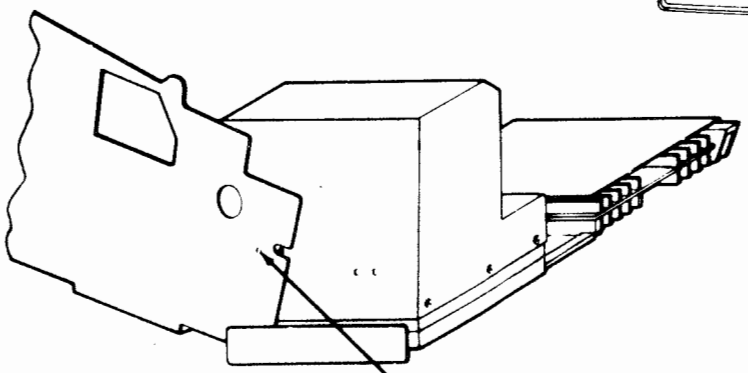

(Left Rear View)

ACCESS HOLE TO HORIZONTAL LINEARITY COIL
(In side frame and high voltage shield)

YOKE ORIENTATION

Requirement
The rectangular display area should be aligned (rotationally) to the CRT face.

DANGER: HIGH VOLTAGES ARE PRESENT AT YOKE. HANDLE ONLY BY YOKE LINER. THE NECK OF CRT IS FRAGILE. BE CAREFUL NOT TO STRIKE GLASS WITH SCREWDRIVERS, ETC. DO NOT OVERTIGHTEN YOKE CLAMP SCREW.

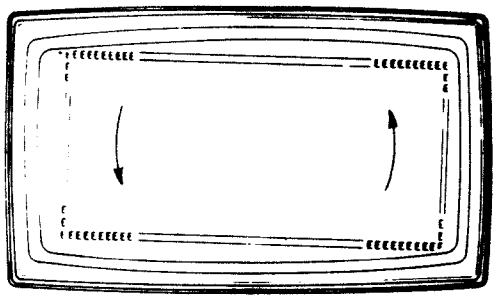

Rotate yoke to align display.

To Adjust
Loosen yoke clamp screw. Rotate yoke to align display with CRT face. Do not overtighten yoke clamp screw.

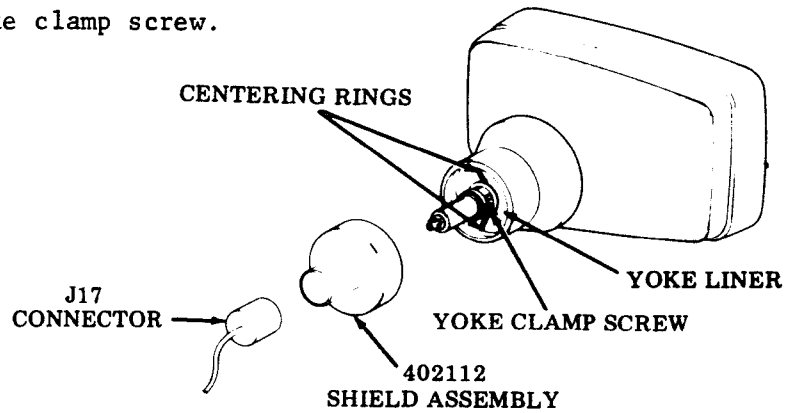

DISPLAY CENTERING

Requirement
The display (80 characters by 24 lines) should be centered on CRT face as gauged by eye.

To Adjust
Rotate two display centering rings by tabs.

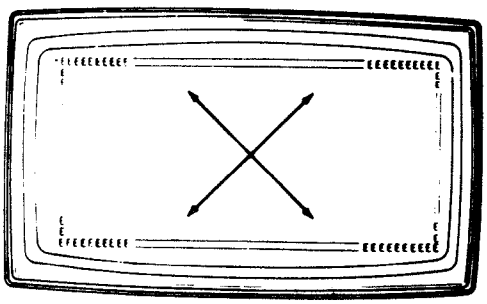

Display movement as centering rings are rotated.

C. PRINTER

This section provides adjustment procedures for the Model 40 printers.

Unless specified otherwise, adjustments apply to all printers (80-column friction and tractor, and 132-column tractor).

Refer to Maintenance Tools, Section 570-005-800TC for a complete listing of the various types of hand tools available to make the adjustments. 402617 gauge (80-column friction or tractor), 402716 and 402717 (132-column tractor), and two 408765 gauges (132-column) are required for certain adjustments. Also, 402868 dynamic backup bar gauge and 402878 type carrier alignment gauge are used in adjusting 80-column friction or tractor, and 132-column tractor printers.

To remove the printer from the cabinet, reverse the procedure in Part 6 covering removal of the printer.

Use maintenance pad 124828 to protect bench top or floor coverings from oil, grease, and dirt while adjusting or lubricating the unit.

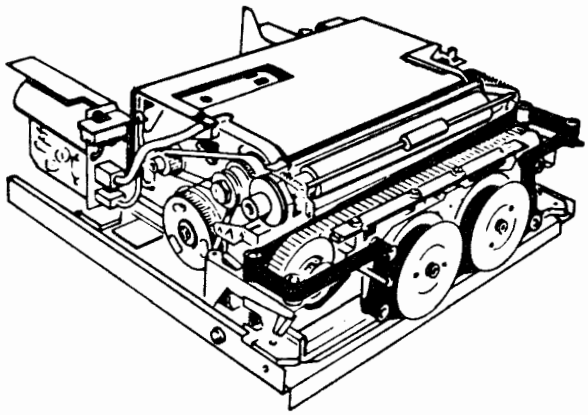

40P101 and 40P102 80-Column
Friction Feed

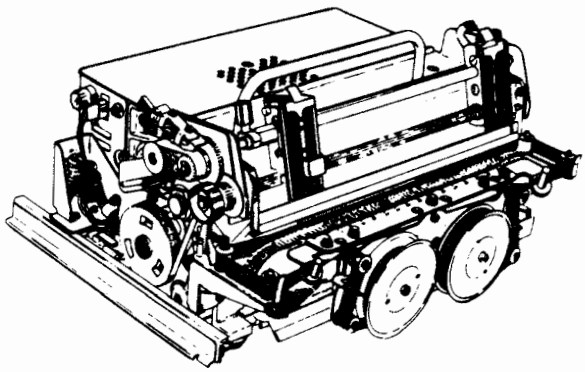

40P151 or 40P154 80-Column
Tractor Feed

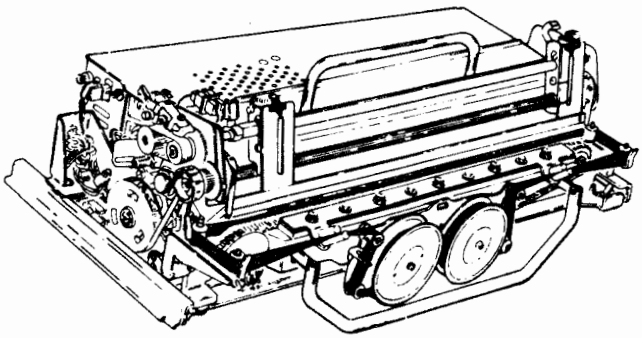

40P201 or 40P202 132-Column
Tractor Feed

Some adjustments require access to subassemblies that have to be removed. For removal of these subassemblies, see Part 6.

The adjustments for the printer are arranged in a sequence that should be followed if a complete readjustment of the printer is undertaken. A complete adjustment procedure should be read before attempting to make the adjustment. After an adjustment has been completed, be sure to tighten any nuts or screws that may have been loosened to facilitate the adjustment, unless otherwise instructed.

The belt tensions given in this section are indicated values and should be checked with proper spring scales. The adjusting illustrations, in addition to indicating adjustment tolerances, show the angle at which the scale should be applied when measuring belt tensions.

Some of the adjustments require the printing of the font identification character. This character is printed when the printer is running and the TEST switch is placed in the ON position. The associated printer cover Interlock switch must be disabled (bypassed) for printer operation.

All tolerances in the adjustments in this section unless otherwise stated, are in inches.

When a requirement specifies a disengaged clutch, the clutch must be fully latched so that the clutch shoes are completely disengaged from the clutch drum. To become fully latched, the trip lever (or stop arm) must engage the clutch shoe lever, and the clutch disc must rotate far enough to permit the latchlever to fall into the notch in the clutch disc.

When rotating the clutch shaft of the printer by hand, the clutch does not fully disengage upon reaching its stop position. In order to relieve the drag on the clutch drum and permit the shaft to rotate freely, apply pressure to the stop lug on the clutch disc with a screwdriver until the latchlever falls into its notch on the clutch disc. The internal expansion clutch is then fully disengaged. This procedure should be followed before placing the printer in its cabinet and switching on the power.

When engaged, the clutch shoe lever is unlatched (tripped), and the clutch shoes are wedged against the clutch drum.

C. PRINTER (Contd)

ADJUSTMENTS

IMPELLER SHAFT DRIVE BELT TENSION

Requirement

With a force of 5 ounces applied perpendicular to drive belt approximately midway along its free length, the belt should deflect

Min 1/8 inch -- Max 3/16 inch

from a line tangent to both pulleys.

To Adjust

Loosen four motor assembly mounting screws friction tight. Using a screwdriver, pry the flat washer under one of the mounting screws in the desired direction using appropriate end of slot. Tighten mounting screws.

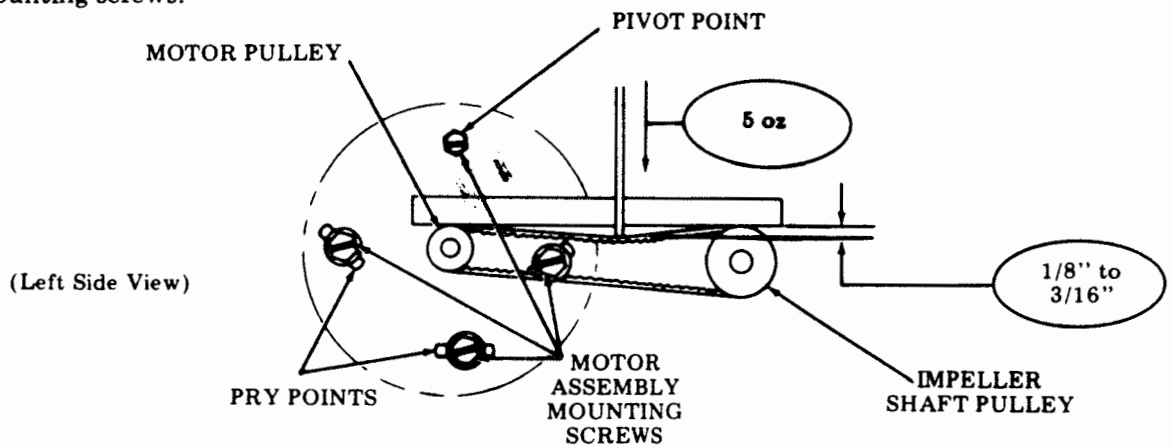

RIBBON FEED DRIVE BELT TENSION
(80-Column Friction or Tractor Only)

Requirement

With a force of 5 ounces applied perpendicular to the drive belt approximately 1 inch from right pulley, belt should deflect

Min 1/8 inch --- Max 3/8 inch

from a line tangent to both pulleys.

To Adjust

Loosen mounting screws to allow mechanism to move freely to right or left. Pull against construction hole to left. Tighten mounting screws with tension applied.

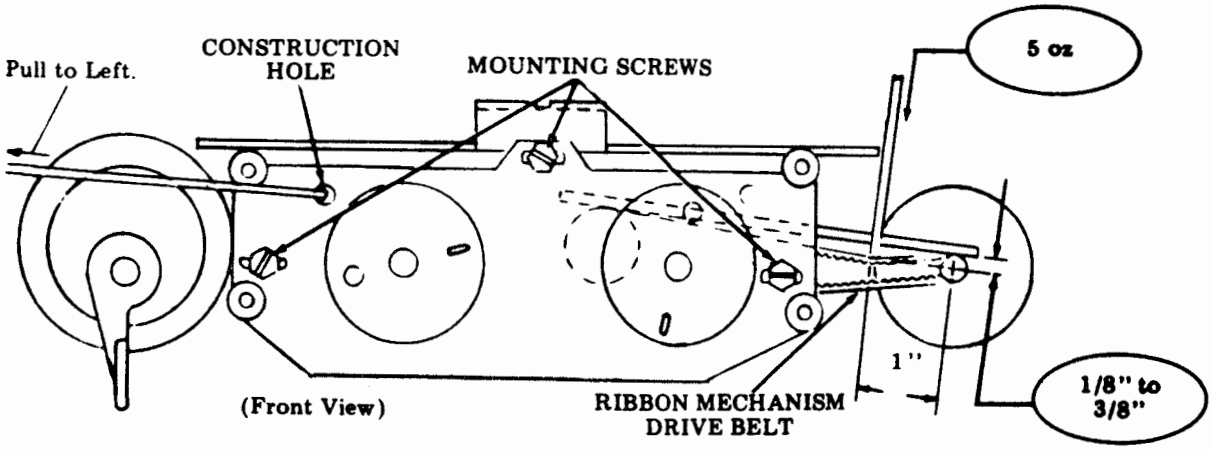

RIBBON FEED DRIVE BELT TENSION (Contd)

(132-Column Tractor)

Requirement

There should be

Min 11/32 inch --- Max 1/2 inch

between outside surfaces of drive belt when a force of 8 ounces is applied adjacent to ribbon mechanism frame.

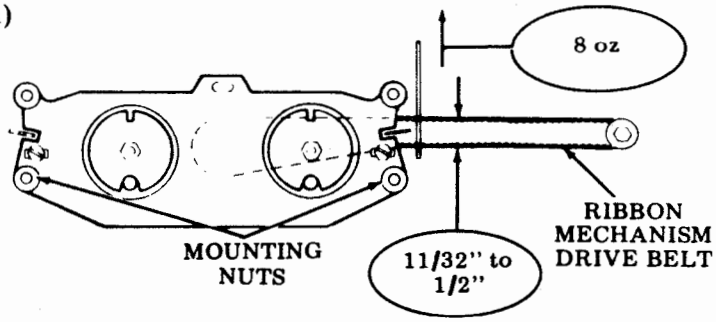

To Adjust

Loosen mounting nuts to allow mechanism to move freely to right or left. Position ribbon mechanism to meet requirement. Tighten mounting nuts.

CLUTCH DRIVE BELT TENSION

Requirement

With a force of 5 ounces applied perpendicular to drive belt approximately midway along its free length, belt should deflect

Min 1/16 inch --- Max 5/32 inch

from a line tangent to both pulleys.

To Adjust

Loosen line feed assembly mounting screws to allow assembly to move freely about its pivot. Position line feed assembly to meet requirement. Tighten mounting screws.

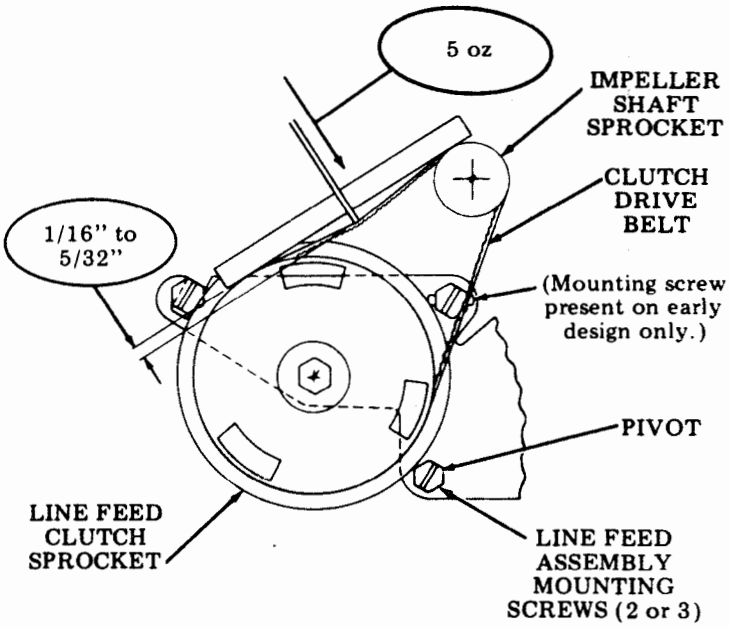

FEED BAR BAIL SPRING TENSION

(80-Column Friction or Tractor Feed or 132-Column Tractor Feed)

Requirement (Late Design Tractor)

It will require

Min 42 oz --- Max 68 oz

(402905 spring)

to start the feed bar roller bail moving.

Requirement (Friction Feed and Early Design Tractor)

It will require

Min 32 oz --- Max 44 oz

(41385 spring-friction,

55089 spring-tractor)

to start the feed bar roller bail moving.

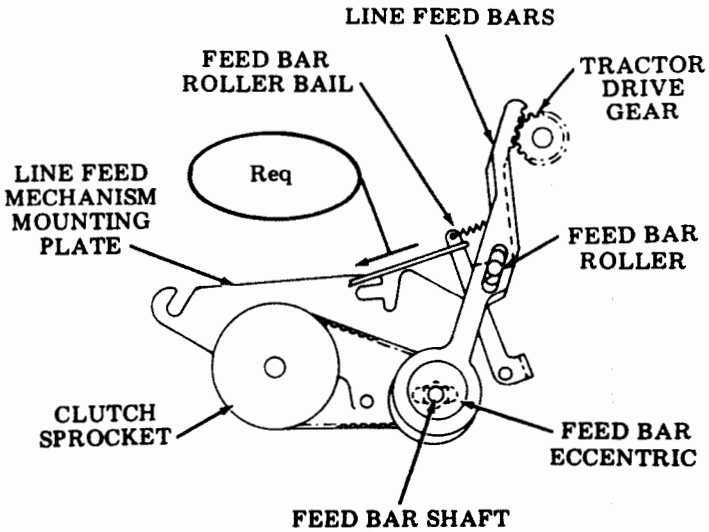

C. PRINTER (Contd)

ADJUSTMENTS (Contd)

RIBBON MECHANISM DRAG (Early Design)

Requirement

It should take

Min 3 oz --- Max 8 oz

to start the free-wheeling ribbon drive disc moving when pulling tangentially on its drive pin. To check the other ribbon drive disc, reverse ribbon mechanism by pulling up on reversing lever adjacent to the free-wheeling drive disc and manually rotating impeller shaft clockwise as viewed from the right side of printer until reversal occurs. The other ribbon drive disc is now the free-wheeling disc and may be checked.

To Adjust

Remove ribbon drive disc assembly as shown and replace spring washer. Reassemble and recheck requirement.

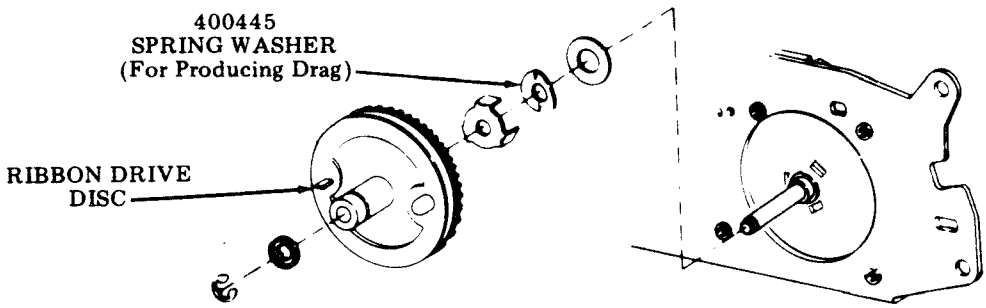

(Right Front View)

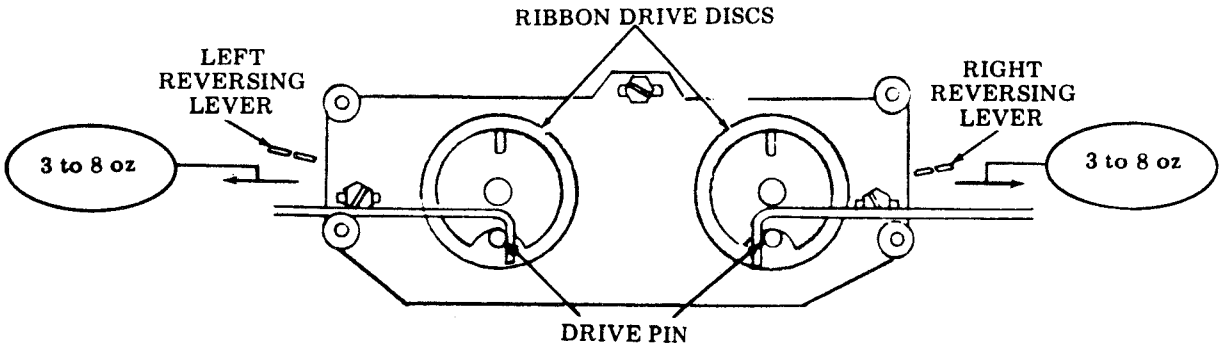

Note: Late Design — No adjustment required if 402816 spool mounting disc assemblies are present.

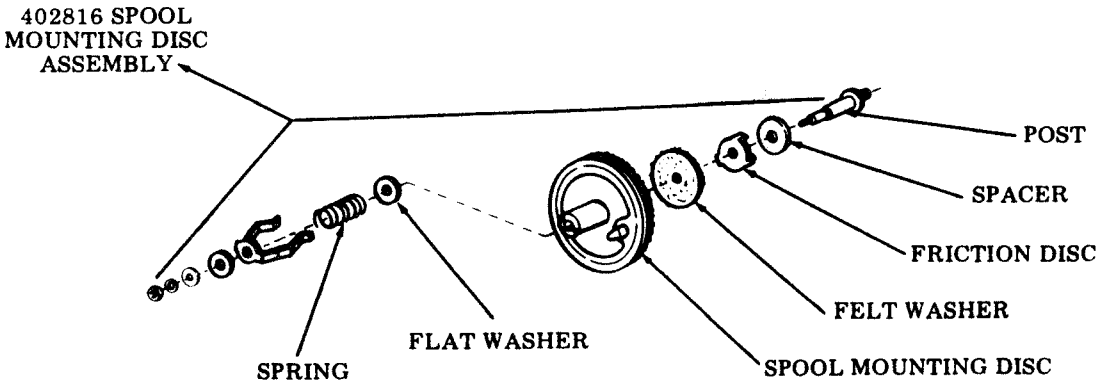

CLUTCH BIDREC GAP (Friction Feed Printers) (Early Design)

- Clutch engage.

Requirement
Gap between clutch adjusting disc post and shoe release lever
Min 0.002 inch --- Max 0.018 inch
from machines operated under 100 hours --

Min 0.002 inch --- Max 0.025 inch
for machines operated over 100 hours.

To Adjust
If requirement cannot be met, replace clutch shoes and/or clutch drums.

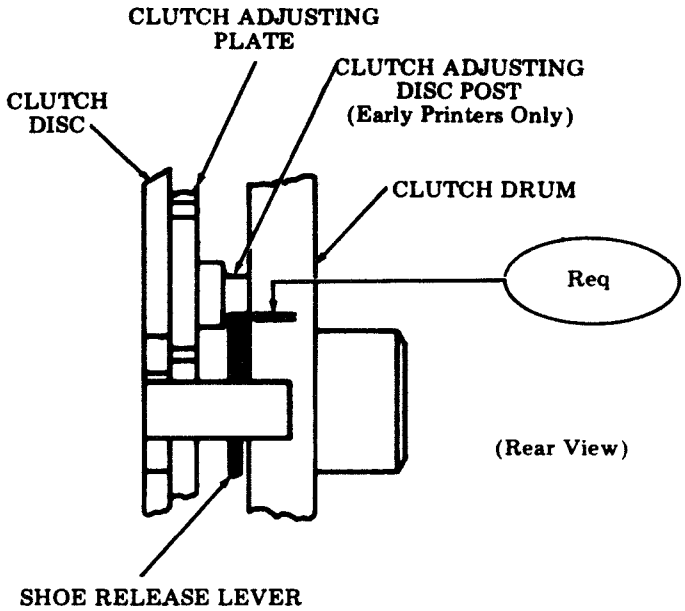

CLUTCH SHOE RELEASE ARM SPRING

- Engage clutch.
- Hold clutch disc.
- Pull with scale on shoe release arm tangent to the clutch.

Requirement
Min 16 oz --- Max 22 oz
to move the shoe release arm into contact with the stop lug.

To Adjust
Remove clutch assembly and replace 150241 spring.

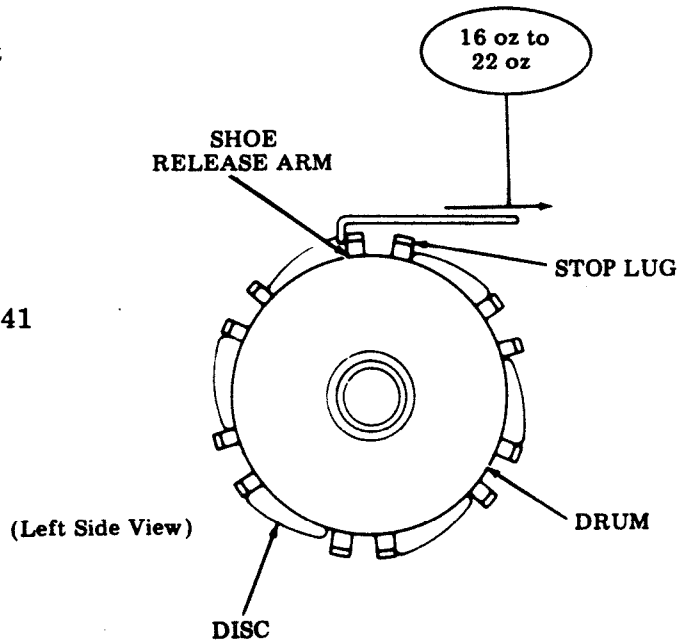

C. PRINTER (Contd)

ADJUSTMENTS (Contd)

CLUTCH MAGNET AND LATCH SPRING

Requirement
The clutch disc should be in the center of the latch spring, and the shoe release arm should be central to the end of the stop lever as gauged by eye.

To Adjust
Remove line feed magnet assembly. Loosen mounting screws friction tight. Position stop lever and latch spring. Tighten mounting screws.

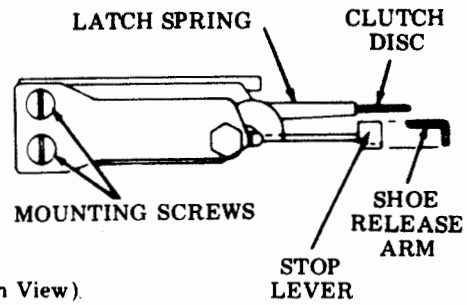

Note: Perform CLUTCH STOP LEVER adjustment after reassembling line feed magnet assembly.

CLUTCH SHOE RELEASE ARM

Requirement
There should be
Min 0.065" --- Max 0.095"
gap between the shoe release arm and the stop lug while the clutch is engaged.

To Measure
Momentarily disengage clutch by pulling against shoe release arm. After reengaging the clutch momentarily apply 16 ounces of tension on shoe release arm in a direction to give a maximum gap. Rotate clutch disc in a direction to close the gap with sufficient force to overcome the disc spring tension until clutch disc is at rest against its positive stop. While holding clutch disc against its stop, measure gap between shoe release arm and stop lug of the clutch disc.

To Adjust
Loosen two plate clamp screws friction tight. Rotate clutch disc until the requirement is met. Tighten clamp plate screws.

Note: This adjustment is to be made before the clutch assembly is assembled to the line feed mechanism mounting plate and before the plastic output pulley is installed.

To Check the Requirement When the Clutch Assembly is Installed in a Unit:

Hold the clutch drum pulley to prevent it from moving. Trip the clutch magnet. While holding the clutch drum pulley from rotating momentarily apply 16 ounces to shoe release arm in a direction to give a maximum gap. Rotate clutch drum pulley in a direction to close the gap with sufficient force to take up all the play. While holding clutch drum pulley in this position measure the gap.

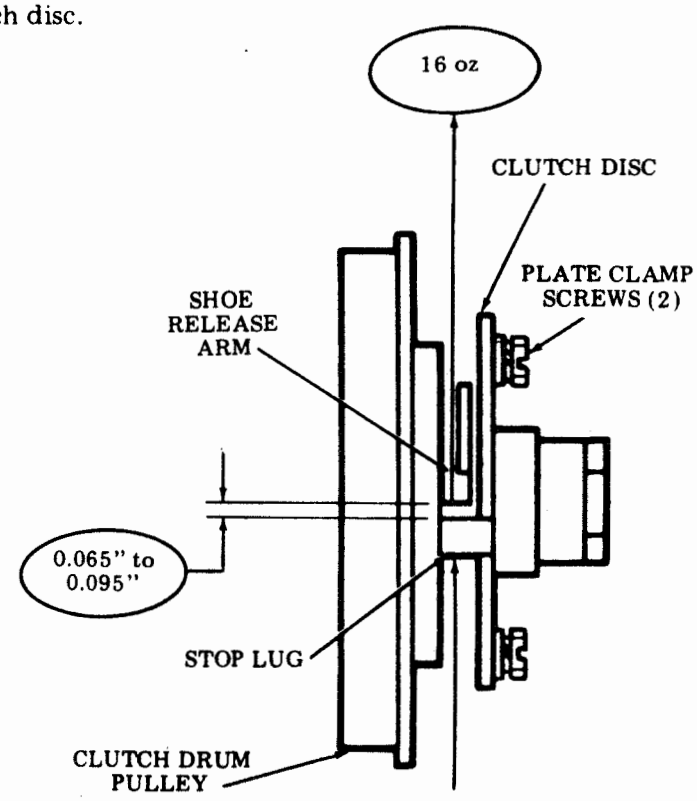

CLUTCH STOP LEVER
(Early and Late Design)

Requirement
The top surface of the clutch stop lever should be Min flush --- Max 0.005 inch overflush with the top surface of the shoe release arm.

To Adjust (Early Design)
Loosen magnet assembly post and mounting screw friction tight. Position magnet assembly to meet requirement using the pry points. Tighten mounting screw and mounting post.

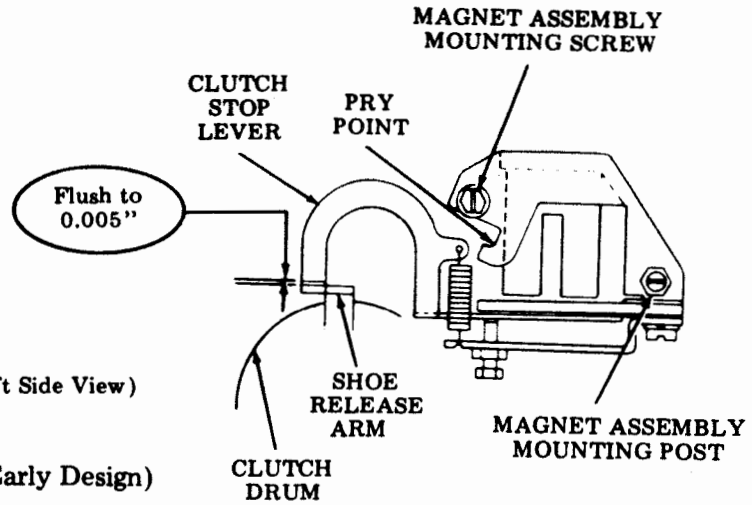

(Early Design)

To Adjust (Late Design)
Loosen magnet assembly mounting nut and armature stop lever mounting screw friction tight. Position armature stop lever so that the clutch stop lever meets the requirement. Tighten armature stop lever mounting screw and nut securely. Check the other 5 clutch positions.

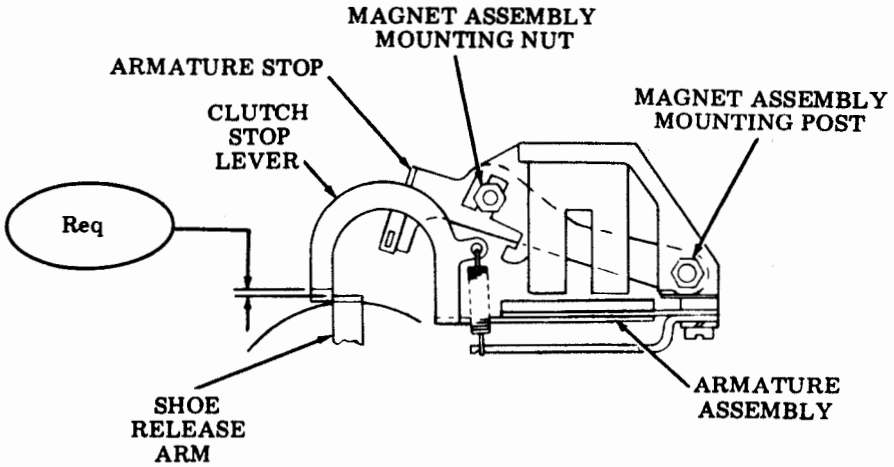

(Late Design)

LINE FEED ARMATURE GAP
(Early and Late Design)

Requirement
A 0.025 inch gauge shall enter the armature and magnet core measured in line with the outer surface of the magnet core but will not pass beyond the midpoint of the pole face.

To Adjust (Early Design)
With locknut loosened, make the adjustment using the adjusting screw. Tighten locknut.

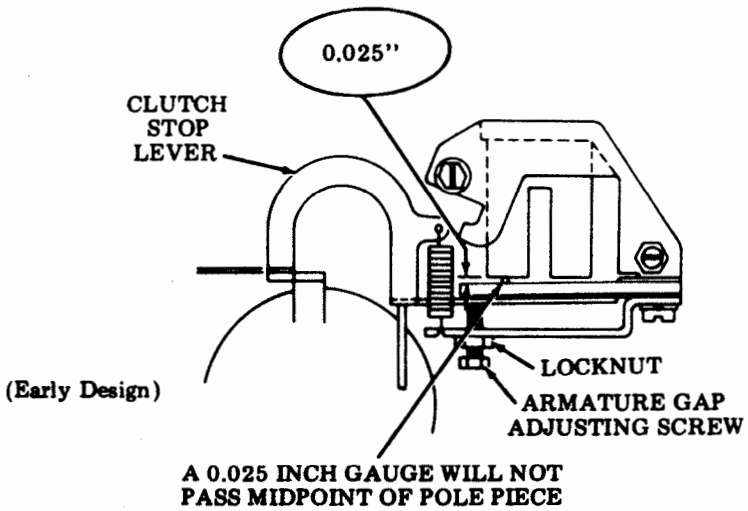

(Early Design)

C. PRINTER (Contd)

ADJUSTMENTS (Contd)

LINE FEED ARMATURE GAP (Cont)

To Adjust (Late Design)
Loosen the magnet assembly mounting post and nut friction tight. Rotate the magnet assembly about the mounting post to meet the requirement.

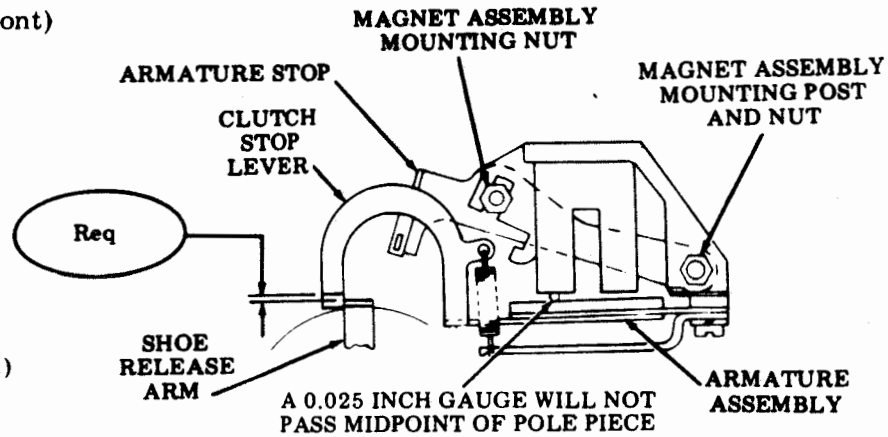

(Late Design)

LINE FEED BAR ECCENTRIC AND DRIVE BELT TENSION

(Late Design)

Requirement (A)
Feed bars should be parallel to each other as gauged by eye.

To Check
Manually energize line feed magnet and rotate line feed clutch sprocket. Latch line feed clutch. Requirement (A) is considered met if the center line of feed bar eccentric alignment hole is in line with rear surface of line feed bar (or top surface of line feed bar on forms access printer).

Requirement (B)
With a force of 5 ounces applied perpendicular to drive belt approximately midway along its free length, the belt should deflect
Min 1/16 inch --- Max 1/8 inch
from a line tangent to both pulleys.

To Adjust
Loosen the nut mounting the feed bar shaft assembly to the mounting plate and move feed bar shaft assembly left or right to meet requirements. Tighten mounting nut securely.

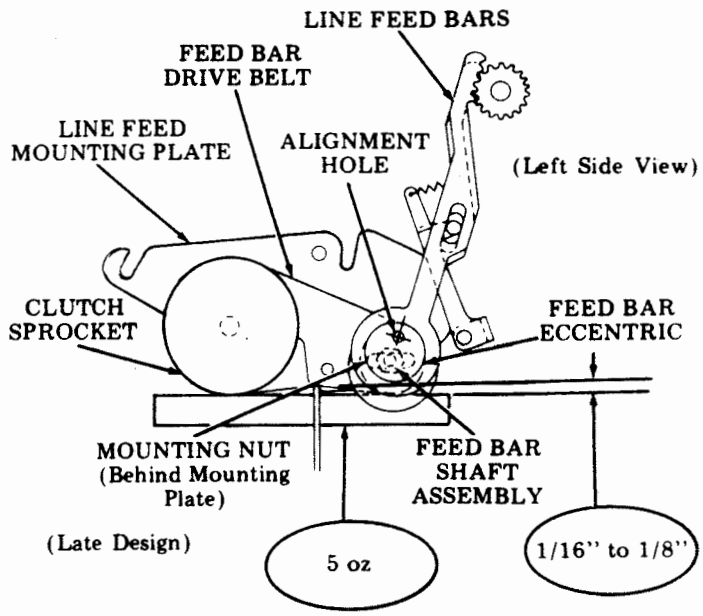

80-Column Friction or Tractor Feed or 132-Column Tractor Feed Printer

(Early Design)

Requirement (1)
Feed bar eccentric adjusting screws should be positioned at right angles to line feed bar rear surface as gauged by eye.

To Check (1)
Manually energize line feed magnet and rotate line feed clutch sprocket. Latch line feed clutch.

To Adjust (1)
Loosen feed bar eccentric adjusting screws. Rotate eccentrics to meet requirement. Tighten adjusting screws.

Requirement (2)
With a force of 5 ounces applied perpendicular to drive belt approximately midway along its free length, the belt should deflect
Min 1/16 inch --- Max 1/8 inch
from a line tangent to both pulleys.

To Adjust (2)
Remove circuit card. Loosen mounting nut. Postion feed bar shaft assembly to meet requirement. Tighten mounting nut.

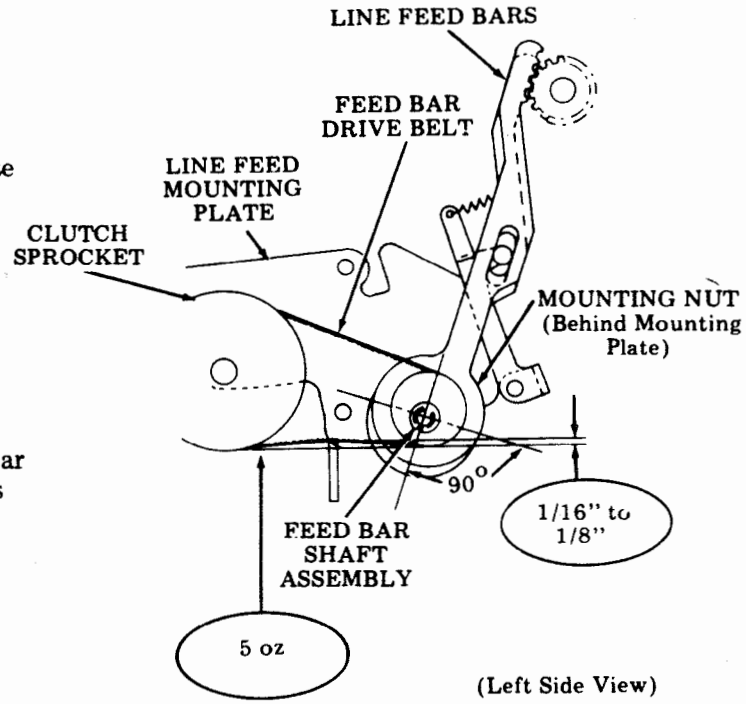

(Early Design)

LOW PAPER SWITCH
(Friction Feed Printer — Under Power)

Requirement
The switch adjusting plate should be positioned in the center of the adjusting range. This position will give a low paper indication with approximately
Min 3/16 inch --- Max 1/4 inch
of paper remaining on the roll. Remove cover to provide access to the low paper switch.

To Check
Remove paper spindle. Place a roll of paper which has between 3/16 inch and 1/4 inch of paper remaining on the roll. Plug in ac power cord. The low paper lamp shall light.

To Adjust
Loosen mounting screws that secure the switch adjusting plate, friction tight. Position plate to meet requirement. Tighten mounting screws.

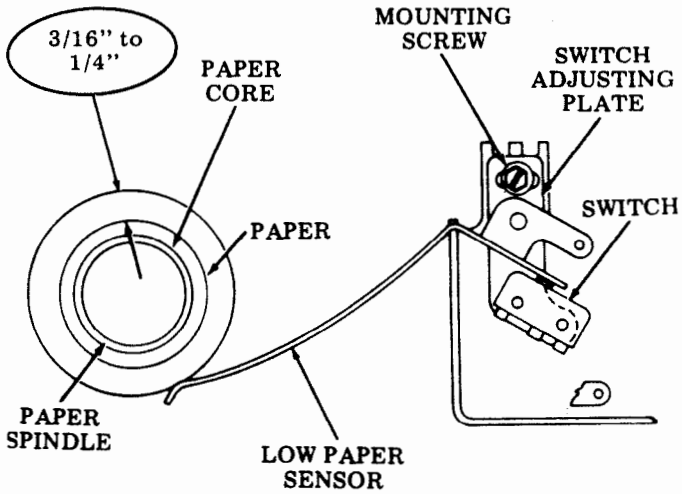

(Left Side View)

C. PRINTER (Contd)

ADJUSTMENTS (Contd)

MASK
(40P102 Friction Feed Printer Only)

Requirement
There shall be some clearance between the top and bottom edges of the mask slot and the top and bottom of the No. 1 and No. 80 hammers.

To Adjust
Pull pressure release lever forward. Loosen two mask mounting screws friction tight. Position mask to meet requirement. Tighten screws.

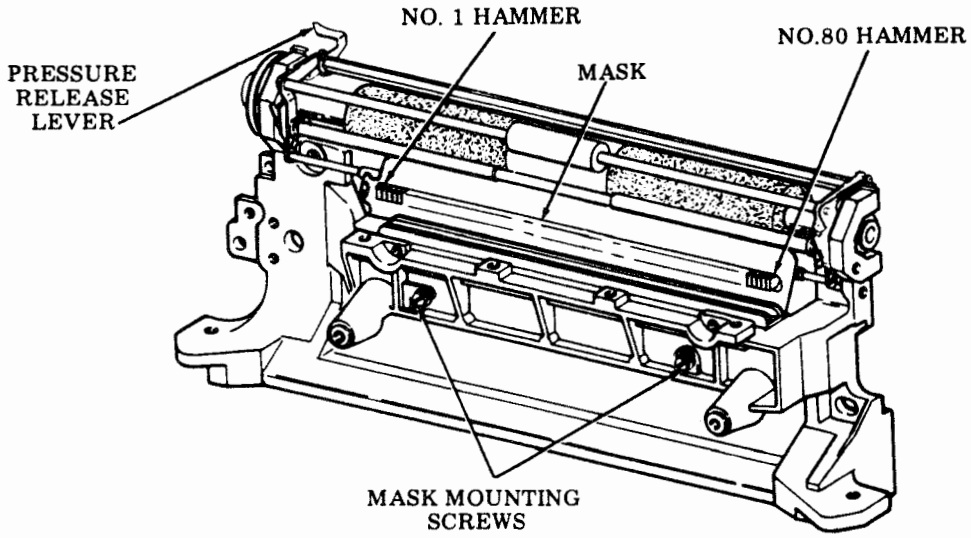

LEFT RIBBON BRACKET
(Friction Feed Only)

Note: This adjustment does not apply to late design units equipped with "black" bracket.

Requirement
The right surface of the bracket shall be flush to the casting.

To Adjust
Loosen bracket mounting screws. Position bracket to meet requirement. Tighten screws.

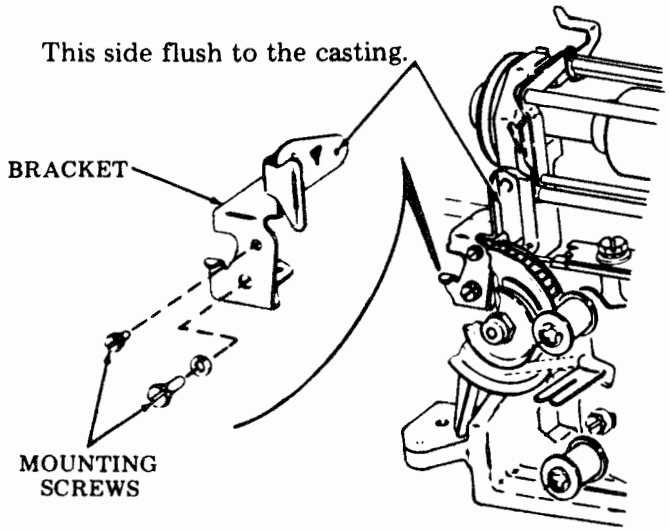

PAPER-OUT SWITCH (Early and Late Design)
(80-Column Tractor Feed Printer)

(Early Design)

Requirement

With a 9/64-inch rod or 400136 lifter inserted in loop of paper-out spring, the paper-out switch should operate when loop is pressed toward paper guide and should operate in the other direction when spring is allowed to return. Determine by ear (clicking noise) or by placing the leads of an ohmmeter across pins 10 and 11 of connector J-3. The ohmmeter should give a closed circuit reading before pressing spring down, and open after releasing.

To Adjust

With clamp screw friction tight, position switch to meet requirement, using pry points. Tighten clamp screw.

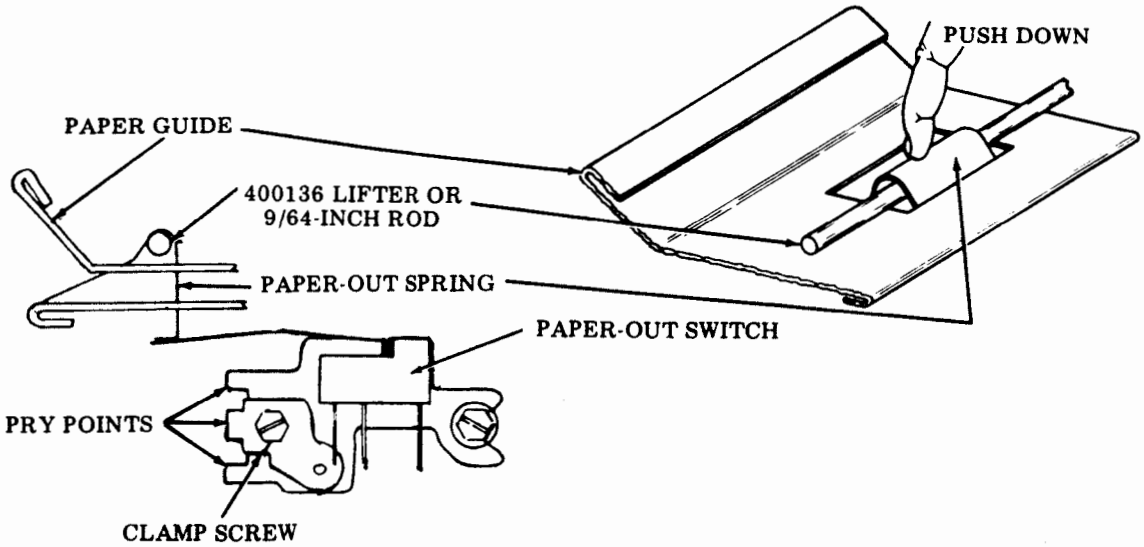

(Early Design)

C. PRINTER (Contd)

ADJUSTMENTS (Contd)

PAPER-OUT SWITCH (Early and Late Design) (Cont)
(80-Column Tractor Feed Pinter)

(Late Design)

Requirement

With a flat plate positioned over the opening in the paper guide and the paper-out actuator biased against the flat plate, a test lamp should be ON or an ohmmeter should indicate a closed circuit. Passing a 0.010 inch flat gauge between the actuator and the flat plate should cause the lamp to go OFF or an ohmmeter to indicate an open circuit.

Note: When the 0.010 inch flat gauge and the flat plate are removed and the flat plate is again positioned over the paper guide opening, the lamp should be ON or an ohmmeter should indicate a closed circuit.

To Adjust

Place a lamp or ohmmeter across pins 1 and 3 of connector J114 on 40P150 through 40P153 printers or across pins 7 and 10 of connector P109 on 40P154 printer. With the clamp screw friction tight and a flat plate over the paper guide opening, move the switch in the direction indicated by ① ← until the end of adjustment range is reached. Position the 0.010 gauge between the actuator and the flat plate and move the switch in the direction indicated by ② → until lamp goes OFF or ohmmeter indicates an open circuit. Tighten clamp screw and recheck requirement.

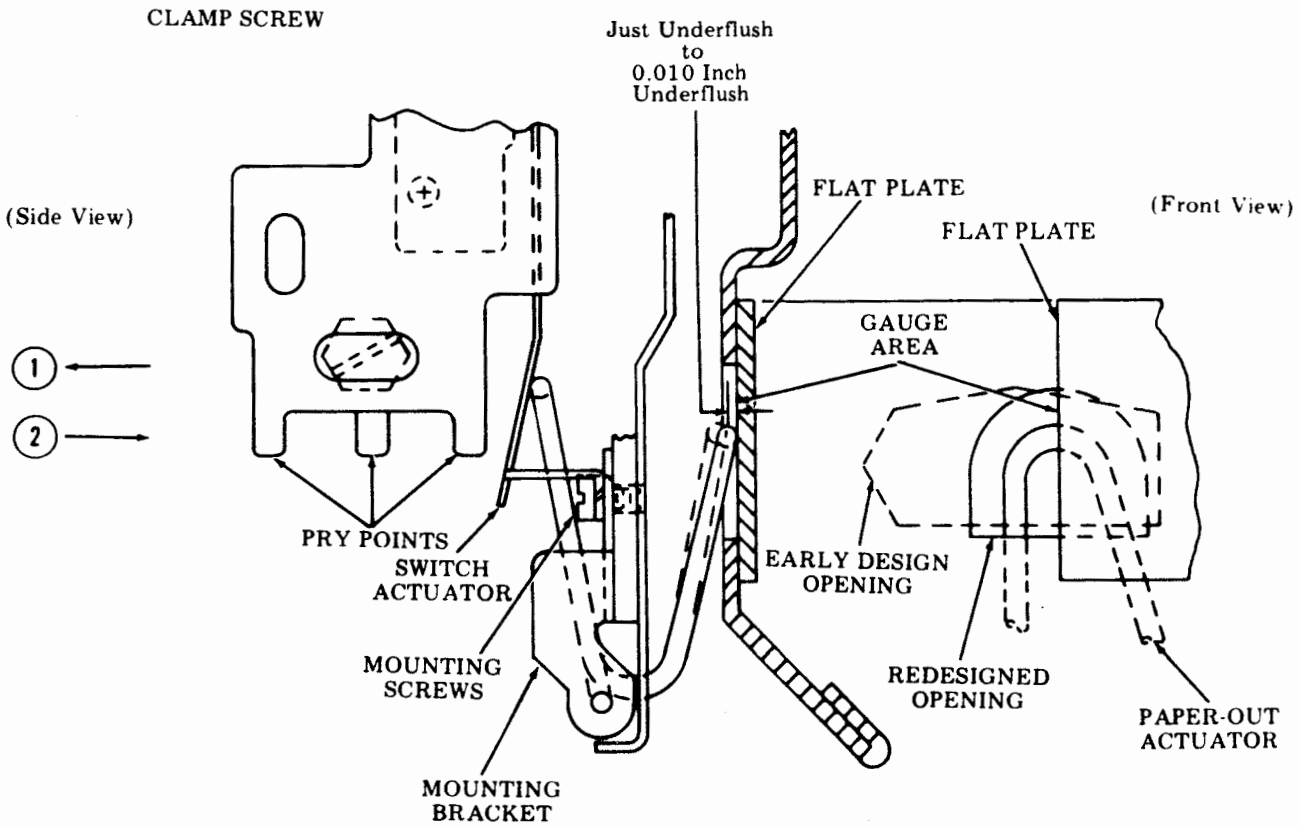

PAPER-OUT SWITCH (Early and Late Design)
(132-Column Tractor Feed Printer)

(Early Design)

Requirement
The paper-out switch should trip when paper-out switch arm is positioned
Min 0.075 inch --- Max 0.095 inch
from rear paper guide.

To Check
Place a gauge between end of paper-out switch arm and rear paper guide. The switch should trip before arm contacts 0.075-inch gauge and should not trip when lightly held against a 0.095-inch gauge.

To Adjust
Loosen two switch clamp screws friction tight. Position switch about its pivot point to meet requirement. Tighten clamp screws.

(Early Design)

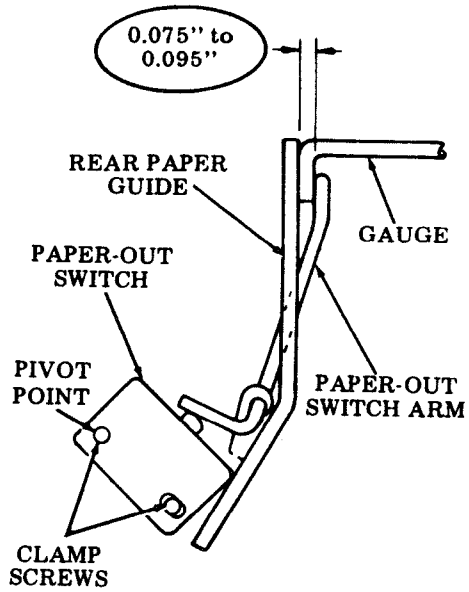

(Late Design)

(1) Requirement
The paper-out switch should trip when the paper-out switch arm is positioned
Min 0.075 inch
from the rear paper guide.

(2) Requirement
With the paper-out switch arm touching the rear paper guide there should be
some clearance
between the switch case and the switch lever.

To Measure
Place a 0.075 inch gauge between the end of the paper-out switch arm and the rear paper guide. The switch should trip before the arm contacts the gauge. Remove the gauge and position the lever against the rear paper guides while checking for some clearance between the switch case and the switch lever.

To Adjust
Loosen the two switch clamp screws friction tight. Position the switch about its pivot point to meet these requirements. Tighten the clamp screws.

(Late Design)

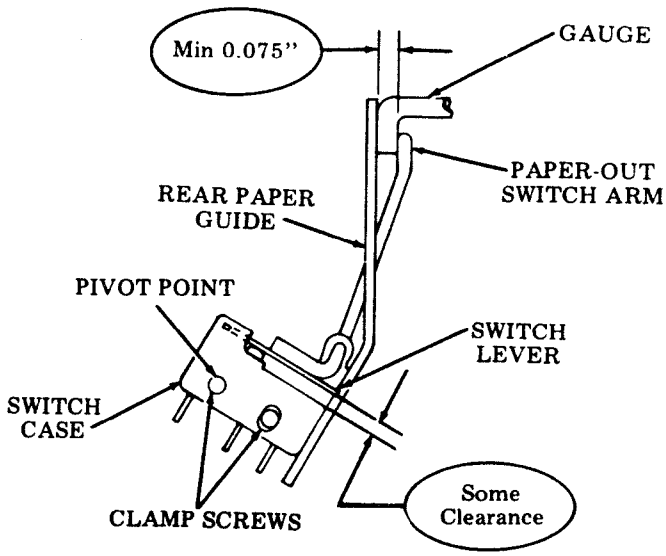

C. PRINTER (Contd)

ADJUSTMENTS (Contd)

PAPER JAM ALARM (For 80- or 132-column tractor feed printers equipped with paper jam alarm mechanism)

Requirement
There should be
Min 0.020 inch---Max 0.040 inch
between the top of the latch and bottom of the actuator when the cam follower is in the trip position.

To Adjust
Loosen the eccentric post mounting nut friction tight. Rotate eccentric to meet requirement. Tighten mounting nut.

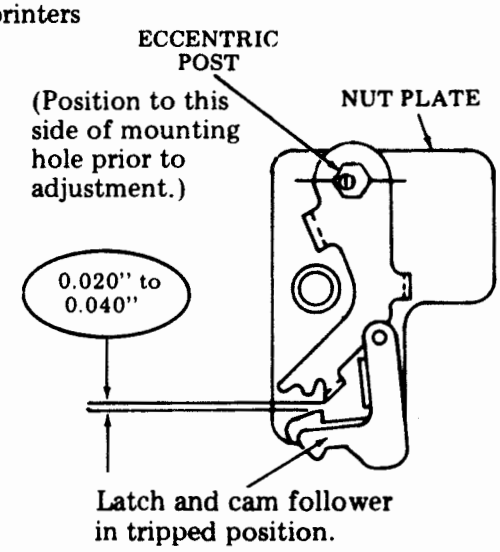

PAPER GUIDE POSITIONING (40P101 Friction Feed Printer)
(Early and Interim Design)

Note: This adjustment does not apply to late design 40P101 printer equipped with a 400377 front casting assembly.

Requirement (Interim Design)
The paper guide should be flush against the upper part of the casting at both right and left sides.

To Adjust
Remove type carrier and ribbon. Loosen the two mounting screws, position guide against the casting, and tighten screws.

Note: (Interim Design and Early Design) This is a manufacturing adjustment and should not be disturbed unless the printer paper guide has been disassembled.

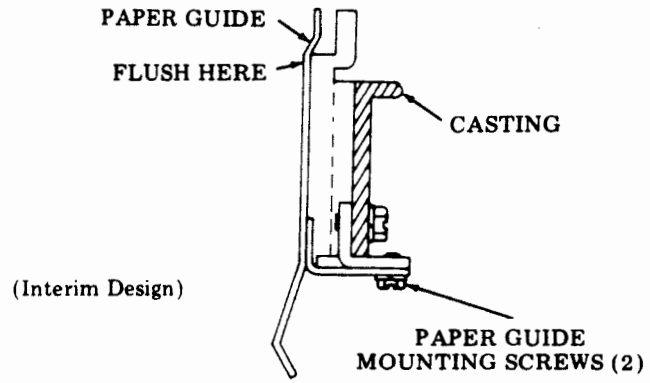

Requirement (Early Design)
There should be
Min some --- Max 0.010 inch
clearance between paper guide and paper guide adjusting screw.

To Adjust
Remove type carrier and ribbon. Position paper guide adjusting screws to meet requirement.

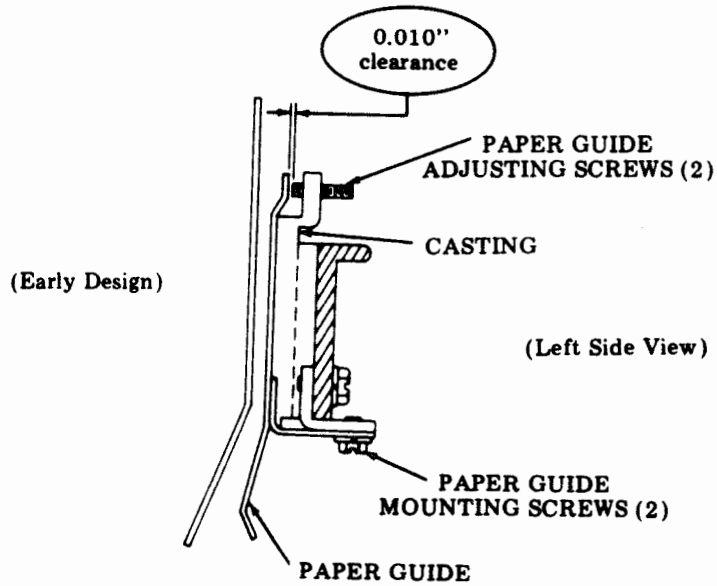

C. PRINTER (Contd)

ADJUSTMENTS (Contd)

MOTOR FAN SPACING (Early and Late Design)

(Early Design)
For motors without thermal overload switch:

Requirement
There shall be
1/4 inch --- ± 1/32 inch
between motor bearing housing and fan hub when the shaft endplay is taken up to make this gap a minimum.

(Late Design)
For motors with thermal overload switch:

Requirement
There shall be
15/32 inch --- ± 1/32 inch
between motor bearing housing and fan hub when the shaft endplay is taken up to make this gap a minimum.

To Adjust
With setscrew loose, push fan in or out to meet requirement. Tighten setscrew.

Note: Early design motors (those without a thermal overload switch button) have the fan spaced at 7/16 inch with the use of a 7/16 inch spacer.

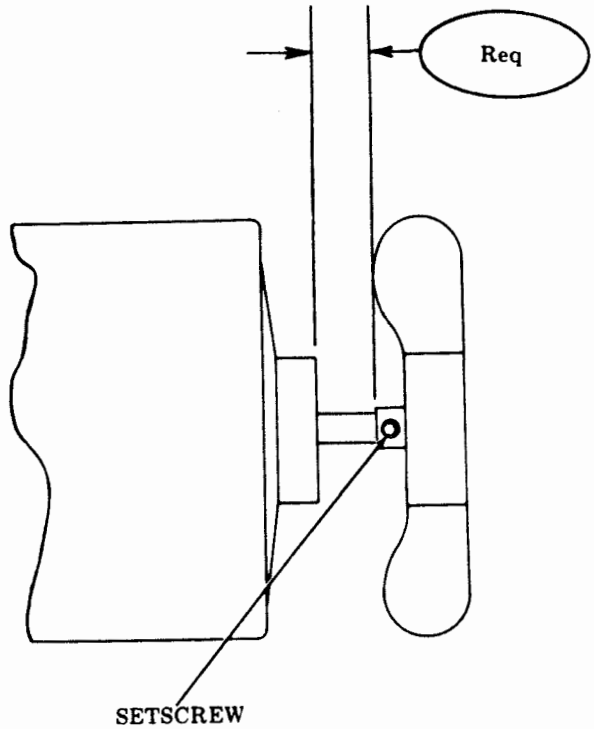

IMPELLER SHAFT SENSOR GAP

Requirement
Min 0.008 inch --- Max 0.020 inch
between teeth of timing wheel and sensor pole piece.

To Adjust
Loosen locking screw. Adjust gap to meet requirement. Tighten locking screw.

Note: It is preferable to use non-magnetic gauges to check requirement. Steel gauges are attracted by the sensor magnet making it difficult to gauge the adjustment.

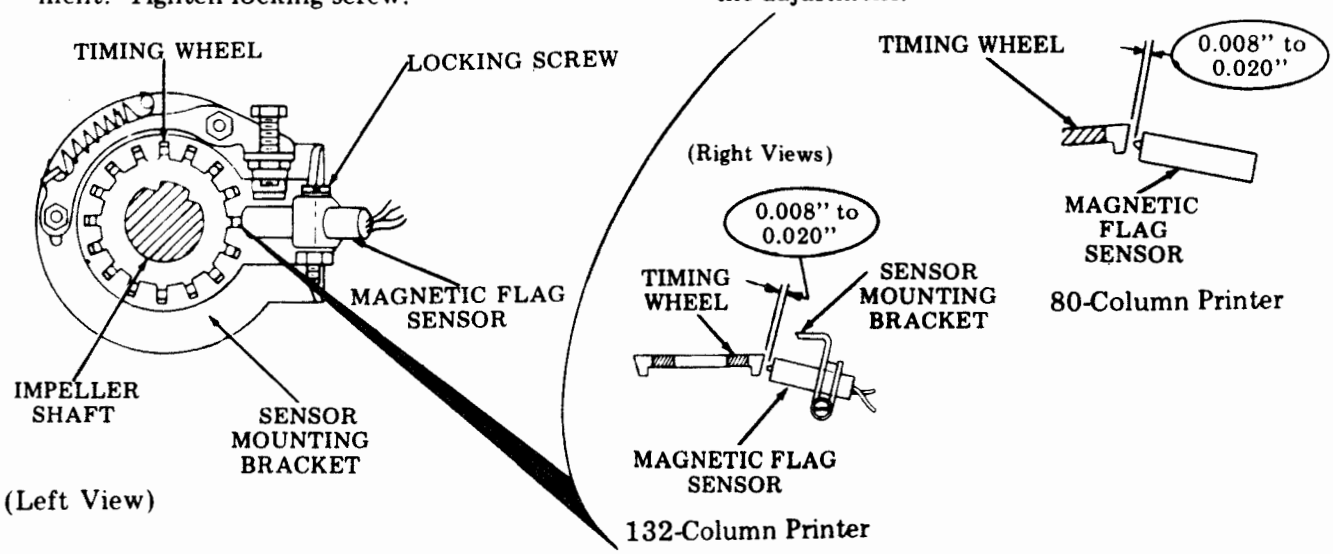

FLAG SENSOR GAP

Requirement
There should be
Min 0.010 inch
clearance between the closest flag and the magnetic sensor pole piece and
Max 0.025 inch
clearance between any flag and the magnetic sensor.

To Adjust
Loosen sensor locking screw. Adjust gap to meet requirement. Tighten locking screw.

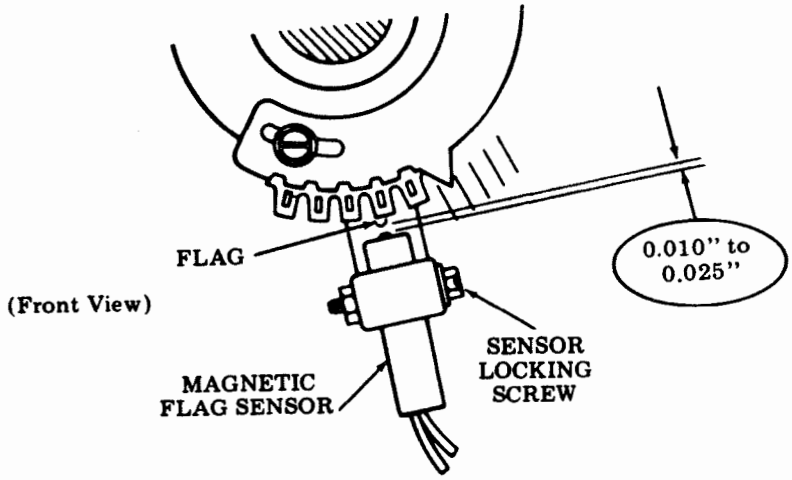

80-Column Friction, Tractor, or Forms Access Printer

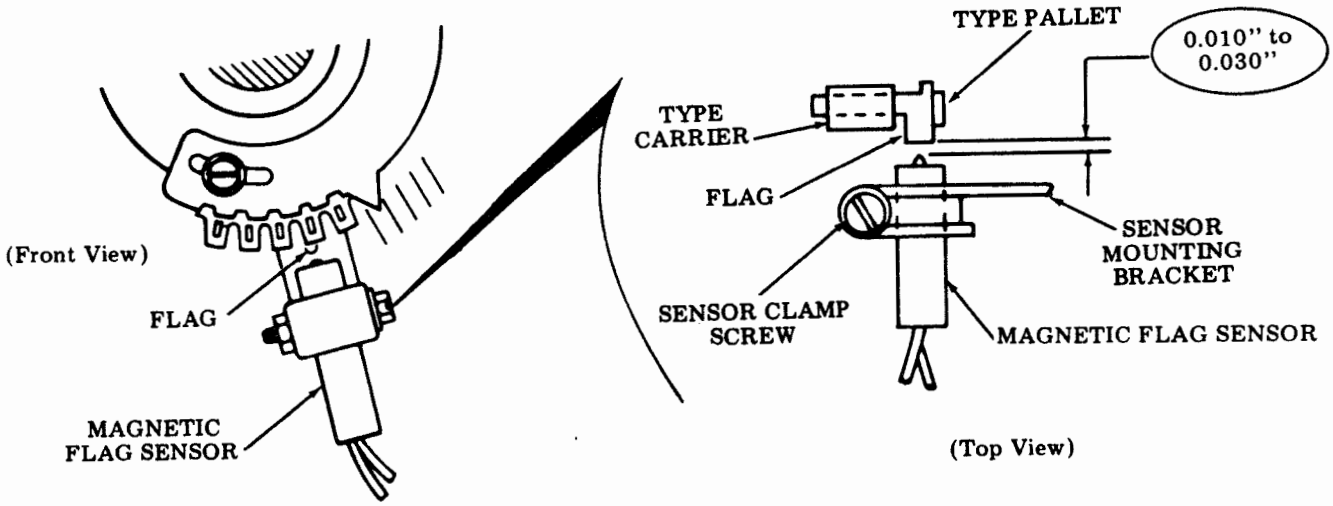

132-Column Printer

Note: It is preferable to use non-magnetic gauges to check requirement. Steel gauges are attracted by the sensor magnet making it difficult to gauge the adjustment.

C. PRINTER (Contd)

ADJUSTMENTS (Contd)

IMPELLER SHAFT SENSOR (Preliminary)

Requirement
There shall be a gap of approximately 0.100 inch between the bottom of the adjusting screw head and the top of the sensor mounting bracket tab.

To Adjust
Turn adjusting screw to meet requirement.

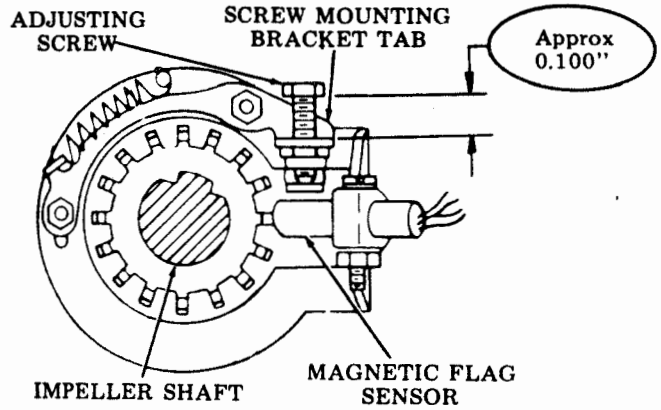

IMPELLER SHAFT TO CARRIER PHASING (Preliminary)

Requirement
Right edge of knurled adjusting collar to be flush with step on threaded collar.

To Adjust
Rotate knurled collar while pushing impeller shaft gear to the left.

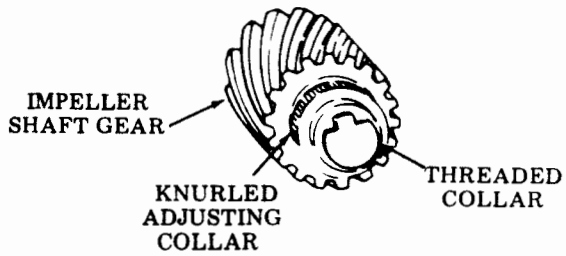

FLAG SENSOR (Preliminary)

Requirement
Indicator to be at midpoint of the range scale.

To Adjust
With the two locking screws loosened, adjust magnetic flag sensor to midrange.

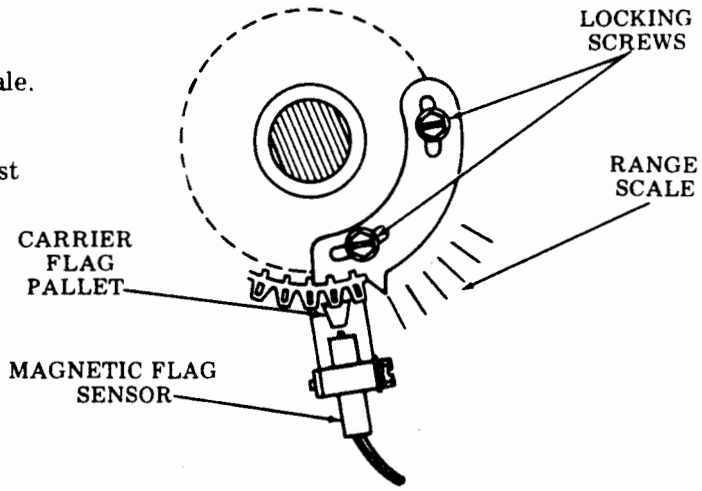

Note: The final range adjustments require the printer be operated in the Test mode and be printing a legible font identification symbol in some columns. The IMPELLER SHAFT TO CARRIER PHASING (Preliminary) and FLAG SENSOR (Preliminary) adjustments may have to be readjusted to gain this level of operation as follows:

Step (1): Operate the test switch to determine if printer will operate. If no printing, or a character other than the font identification symbol occurs, reposition the flag sensor left or right until the font identification symbol or a portion of it is printed.

Step (2): Refine the IMPELLER SHAFT TO CARRIER PHASING adjustment to obtain a legible font identification symbol.

INSTALLATION OF 408765 ADJUSTING GAUGES FOR BACKUP BAR TO CARRIER TRACK ADJUSTMENT (132-Column Printer)

①Remove ribbon.
②Remove tear bar assembly (forms access printer only).
Remove type carrier.

BACKUP BAR TO CARRIER TRACK
(132-Column Printer)

Note: This is a manufacturing adjustment and should not be disturbed unless carrier track channel has been replaced or disassembled.

Requirement
The backup bar should just touch engaging surfaces of 408765 gauges two of which are positioned adjacent to backup bar mounting screws.

To Adjust
With the two backup bar mounting screws friction tight, and the two 408765 gauges in place on carrier track channel, apply finger pressure to backup bar to lightly contact gauges with engaging surfaces. Hold in this position and tighten the two backup bar mounting screws.

Note: On 132 column printer, the column indicator must be removed to make the adjustments.

132-Column Printer

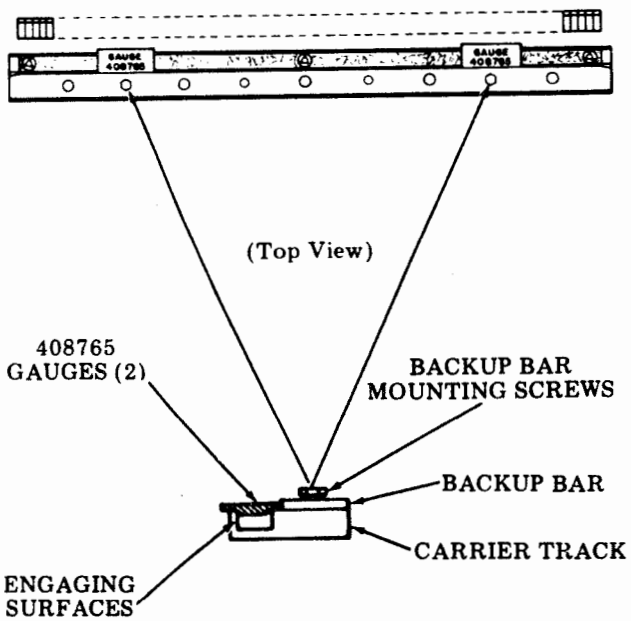

Note: If the BACKUP BAR TO CARRIER TRACK adjustment is made, the BACKUP BAR (Final—Under Power), LEFT and RIGHT CARRIER SPROCKETS and RIBBON GUIDES adjustments must also be made.

C. PRINTER (Contd)

ADJUSTMENTS (Contd)

INSTALLATION OF 402868 ADJUSTING GAUGE FOR BACKUP BAR ADJUSTMENT (80-Column Friction or Tractor Feed or 132-Column Tractor Feed)

Note: For optimum print quality and maximum ribbon life the unit should be adjusted after being at room ambient of 65 to 85 degrees Fahrenheit with all power off for at least three hours.

- Remove type carrier.
- Remove old ribbon and install a new ribbon.
- On units equipped with late design print hammer bumper (black and red), insert a single sheet of paper. On units equipped with early design print hammer bumper (black), insert four (4) thicknesses of single-ply paper without carbons.
- Insert 402868 adjusting gauge on type carrier track with front edge against backup bar. On 80-column printer, position gauge so it is centered in relation to number 1 and number 80 print hammers. On 132-column printer, position gauge first at the left end, then at the right end of the carrier track.

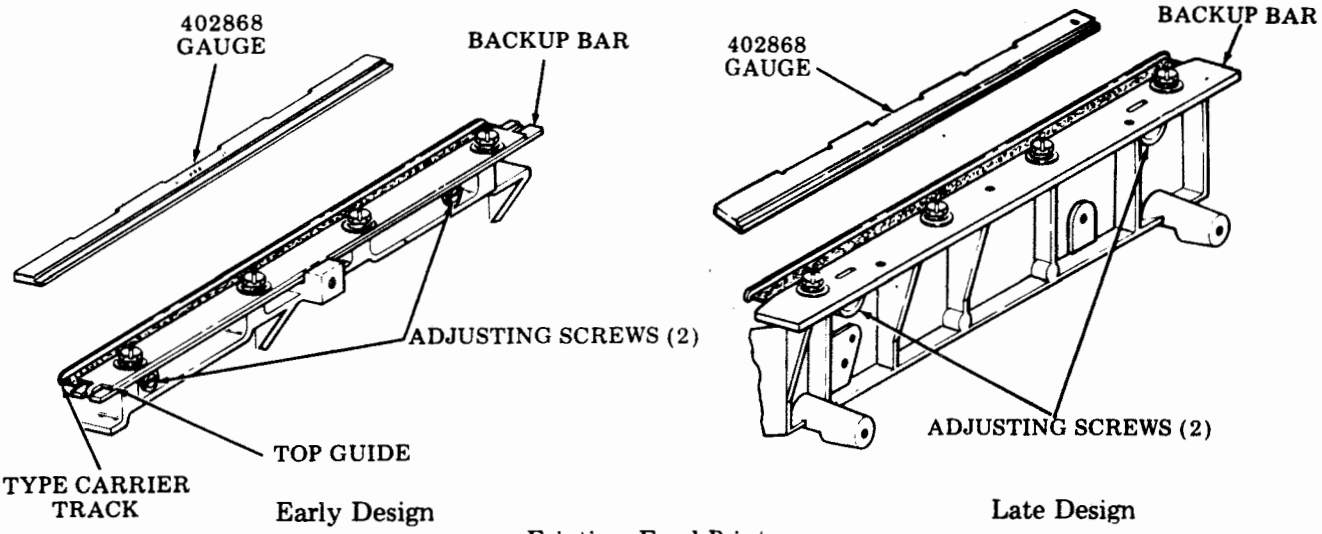

Early Design

Late Design

Friction Feed Printer

Note: On 80-column tractor feed printer or late design friction feed printer, carrier top guide must be removed to install 402868 gauge.

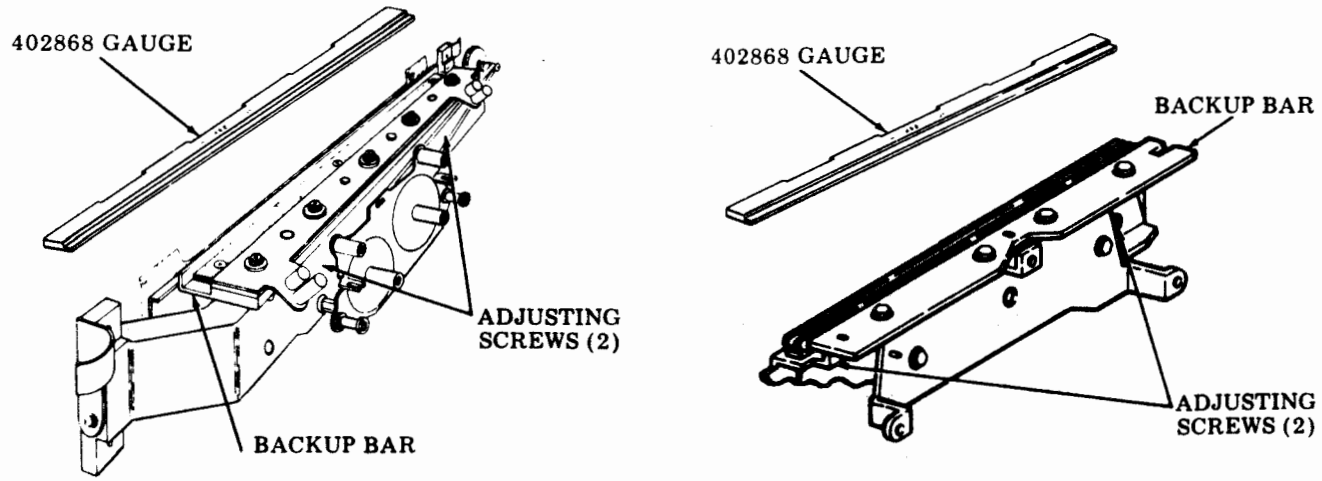

132-Column Tractor Feed Printer

80-Column Tractor Feed Printer

INSTALLATION OF 402617 ADJUSTING GAUGE (Contd)(80-Column Friction or Tractor)

①With ac power off, remove paper and ribbon.
With type carrier removed, insert 402617 gauge on type carrier track with front edge against backup bar. Position gauge so protrusions at rear line up with number 1 and number 80 print hammers.

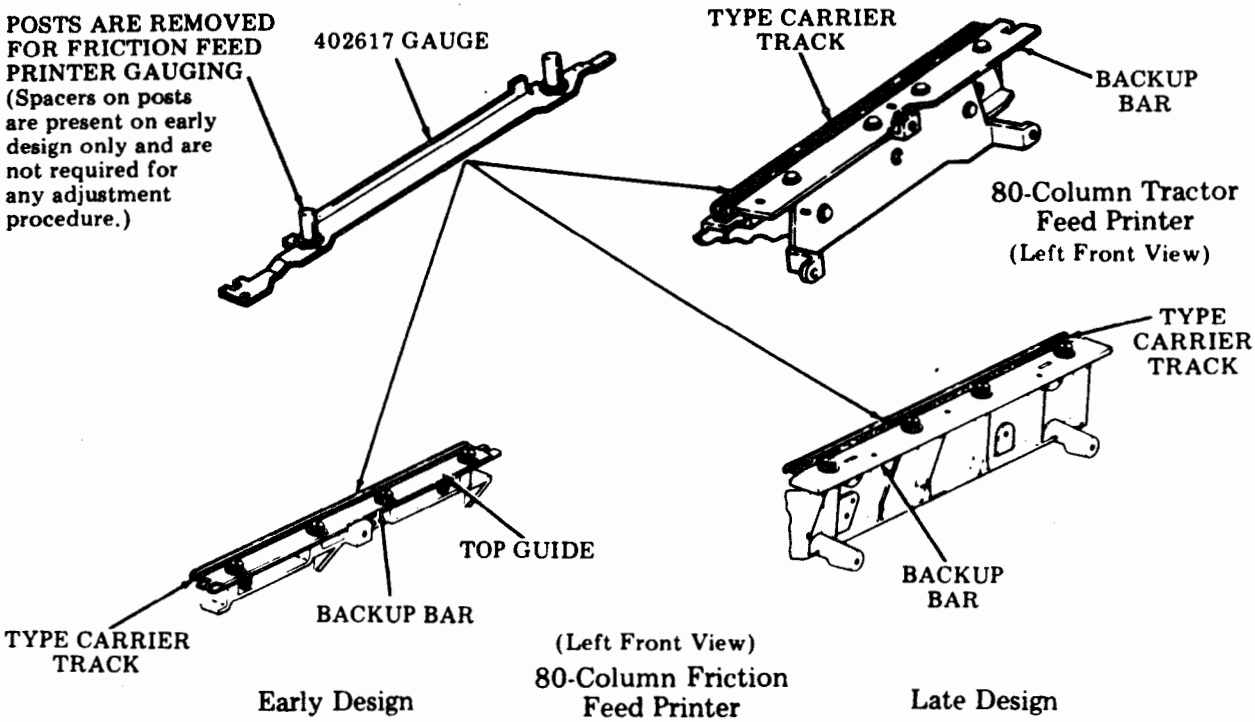

INSTALLATION OF 402716 AND 402717 GAUGES (132-Column Tractor Feed Printer)

①With ac power off, remove paper and ribbon.
②Remove type carrier per instructions on cover.
③Position 402716 (left) and 402717 (right) gauges on top of track and against backup bar.

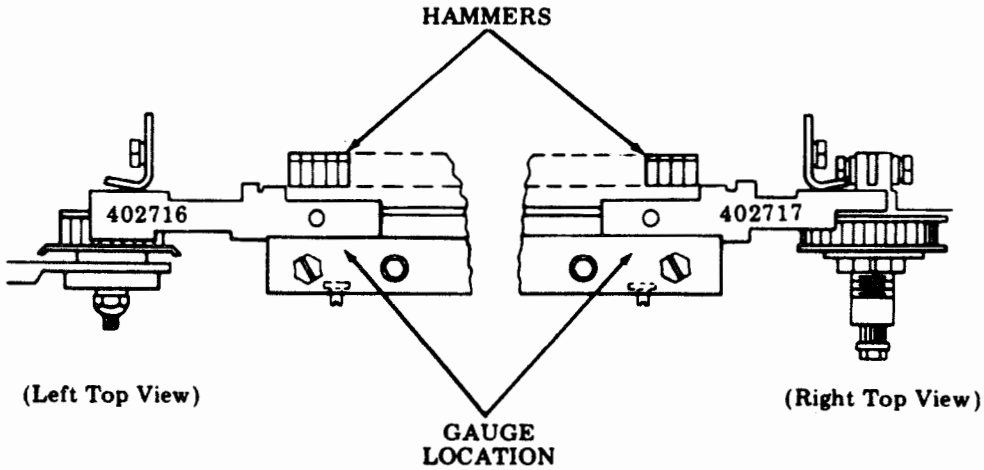

C. PRINTER (Contd)

ADJUSTMENTS (Contd)

RIBBON GUIDE (Preliminary)
(Friction Feed Printer)

Requirement
The right and left ribbon guides should just touch the adjusting gauge.

To Adjust
Loosen left and right ribbon guide mounting screws friction tight. With gauge held by hand against the backup bar, push right and left ribbon guides by hand into contact with the adjusting gauge. Tighten mounting screws.

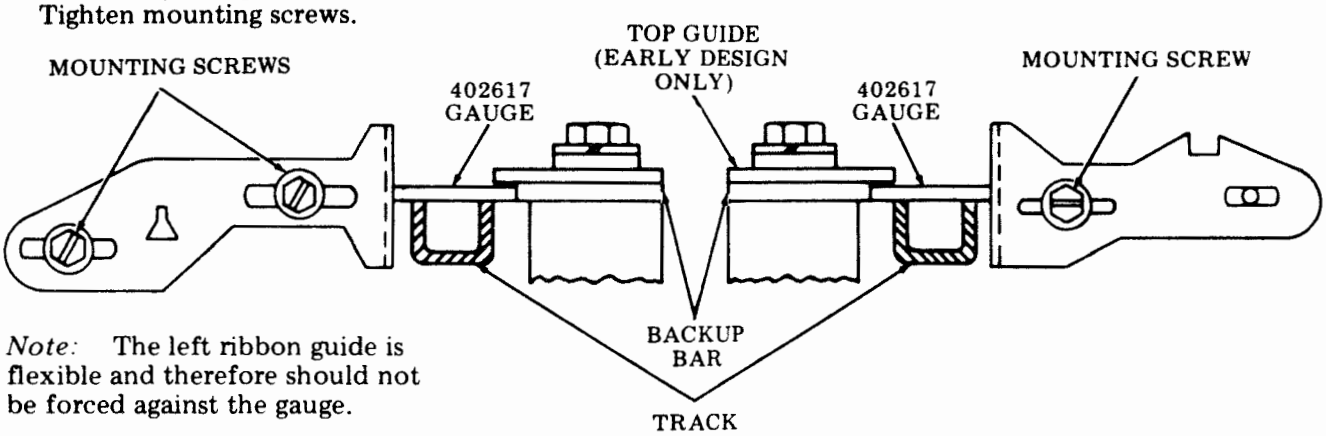

Note: The left ribbon guide is flexible and therefore should not be forced against the gauge.

RIBBON GUIDE (Preliminary)
(80-Column Tractor Feed Printer)

Requirement
The right and left ribbon guides should hold the ribbon shield against the adjusting gauge at the point of contact.

To Adjust
With mounting screws friction tight, push right and left ribbon guides and ribbon shield into contact with the adjusting gauge. Tighten mounting screws.

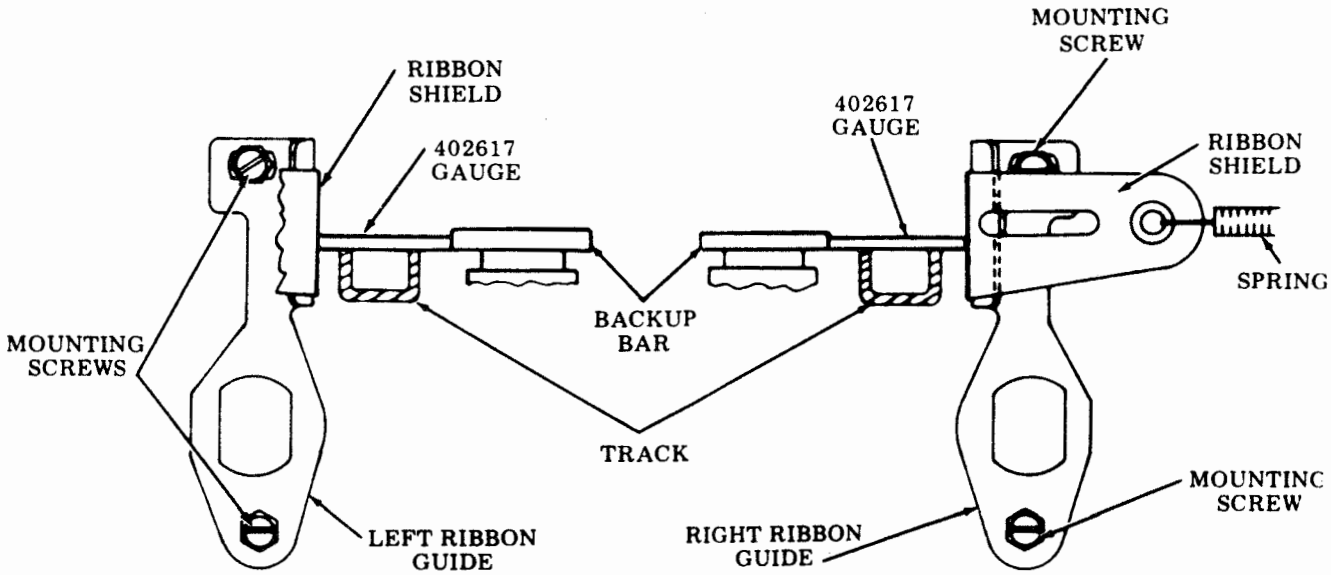

Requirement

The left and right ribbon guides should just touch the 402716 and 402717 adjusting gauges.

To Adjust

Loosen ribbon guide mounting screws friction tight. Position the 402716 and 402717 gauges against the backup bar and position the ribbon guides against the gauge surface. Tighten the ribbon guide mounting screws.

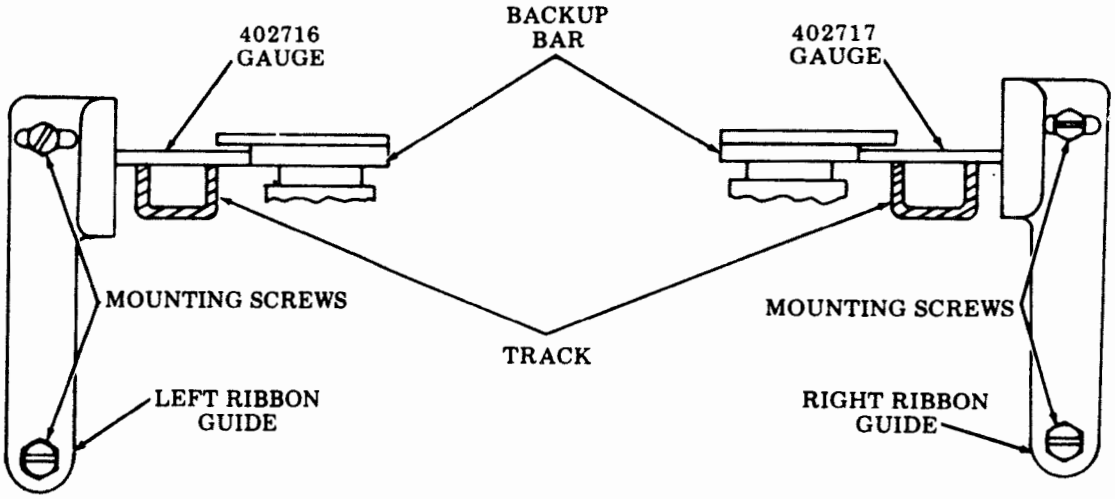

C. PRINTER (Contd)

ADJUSTMENTS (Contd)

BACKUP BAR (Final—Under Power)

Requirement

The overall printing density shall be uniform and acceptable across the full width of the page. If the whole character is present and legible, some variation in density is allowed, provided the density variation is not consistently repeated.

Note: When the unit is properly adjusted for acceptable density, adequate ribbon life will also be achieved; however, if the printer is adjusted for darker density levels, ribbon life will be proportionately reduced.

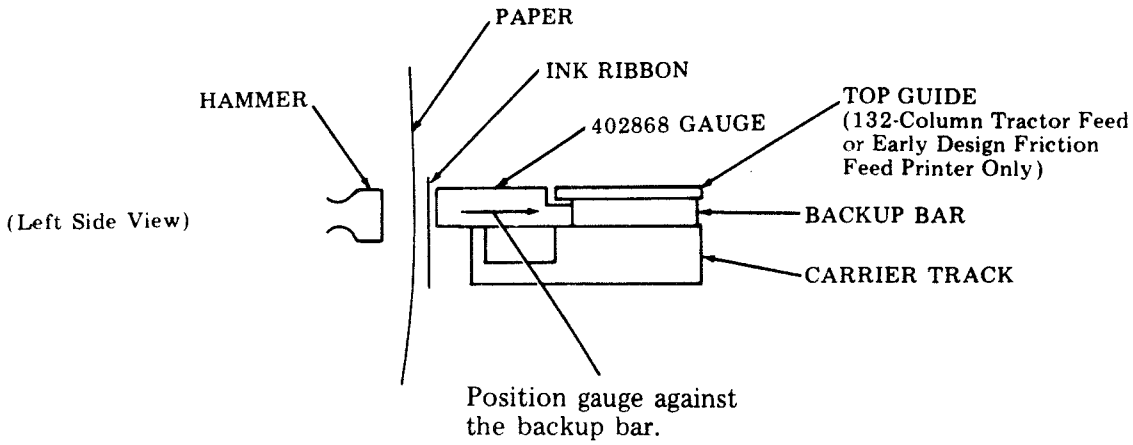

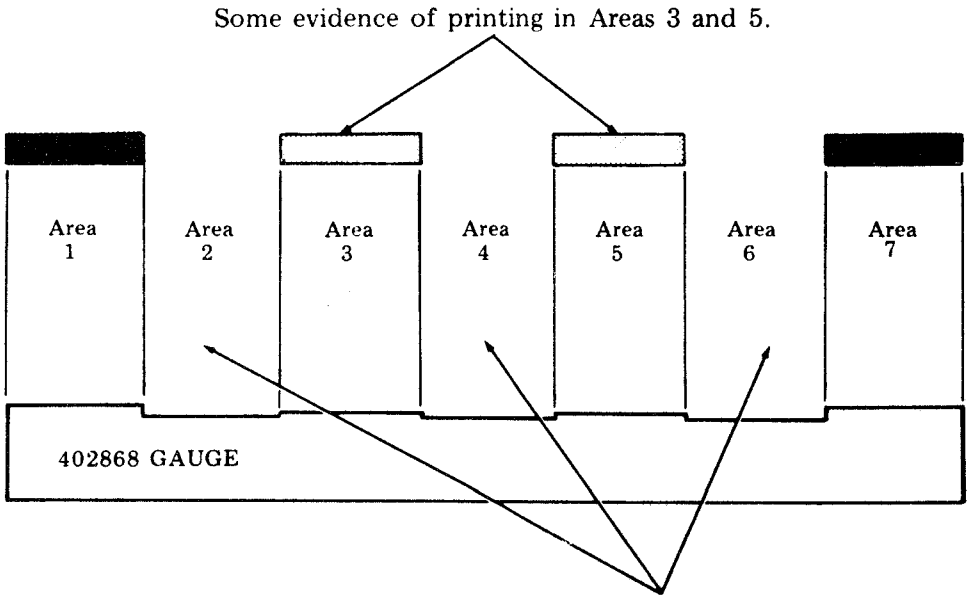

On 80 column units: No visible printing in Areas 2, 4, and 6.
On 132 column units: No visible printing in Areas 2 and 4 with gauge positioned at left end of track or Areas 6 and 4 with gauge positioned at right end of track. Occasional light marks permissible in Areas 6 and 2 when gauge is at left and right ends, respectively.

To Adjust

With unit turned on, hold 402868 gauge firmly against backup bar. Place printer test switch in ON position and pass a steel object over flag sensor to initiate hammer firing.

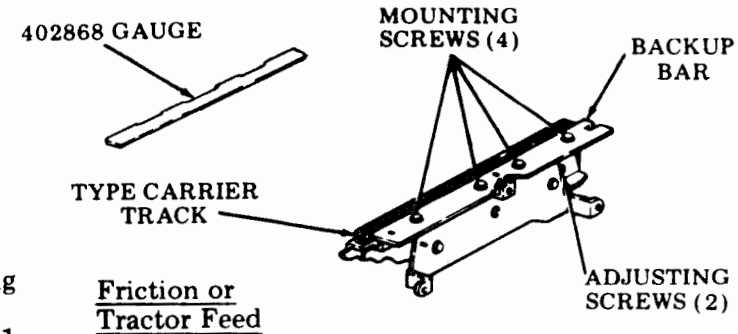

Friction or Tractor Feed

On 80 Column Units: Loosen four (4) mounting screws friction tight and turn two (2) adjusting screws until some printing occurs in only Areas 1 and 7. From this point turn both left and right adjusting screws clockwise until Areas 3 and 5 show evidence of some printing but not necessarily in all columns. This also applies to Areas 1 and 7 where printing will become darker but still may have blank spaces. No printing is permitted in Areas 2, 4 and 6. Tighten four (4) mounting screws.

132-Column

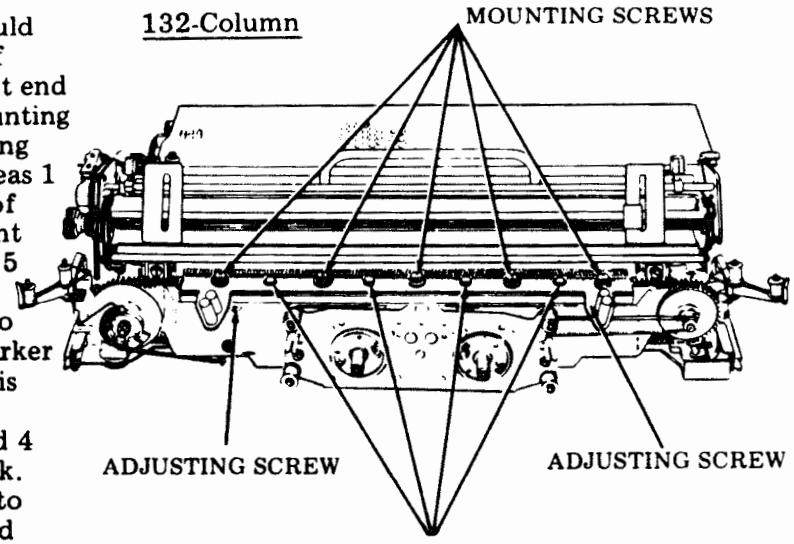

Caution: Do not loosen these screws.

On 132 Column Units: Printed pattern should be noted with gauge positioned at left end of track and again with gauge positioned at right end of track. Loosen five (5) track assembly mounting screws friction tight and turn two (2) adjusting screws until some printing occurs in only Areas 1 and 7 when gauge is positioned at each end of track. From this point turn both left and right adjusting screws clockwise until Areas 3 and 5 show evidence of some printing, but not necessarily in all columns. This also applies to Areas 1 and 7 where printing will become darker but still may have blank spaces. No printing is permitted in Areas 2 and 4 when gauge is positioned at left end of track or Areas 6 and 4 when gauge is positioned at right end of track. Due to relative length of gauge with respect to 132-column page and tolerances of associated piece parts, it is permissible to observe occassional light marks in Areas 6 and 2 when gauge is at the left and right ends, respectively. Tighten five (5) track assembly screws.

C. PRINTER (Contd)

ADJUSTMENTS (Contd)

BACKUP BAR (Final — Under Power) (Cont)

To Check

Install the type carrier. Insert a single sheet of paper and with a random test, check the copy density for conformance to the requirement.

On units equipped with early design print hammer bumper (black), if printer copy is not satisfactory, repeat the adjustment using three (3) thicknesses of paper and recheck copy for density with the type carrier and a single sheet of paper installed. If further density is required (in isolated cases), the printer may be adjusted using two (2) or one (1) thickness of paper.

Note 1: Each time the BACKUP BAR (final) adjustment is made, the following adjustments must also be made:

LEFT AND RIGHT CARRIER SPROCKETS
RIBBON GUIDES (Final) (See Note 2.)

Note 2: On the forms access printer, the ribbon guide adjustment need not be remade unless the carrier track channel has been replaced or disassembled.

LEFT CARRIER SPROCKET (80-Column Friction, or Tractor Feed Printers)

Requirement
Rear surface of sprocket flange should clear adjusting gauge by
Min some --- Max 0.006 inch.

Install 402617 gauge. See Page 5-31.

To Check
Rotate carrier release lever clockwise until rear rim of sprocket just touches bottom of gauge. Take up play in sprocket assembly evenly to rear of printer.

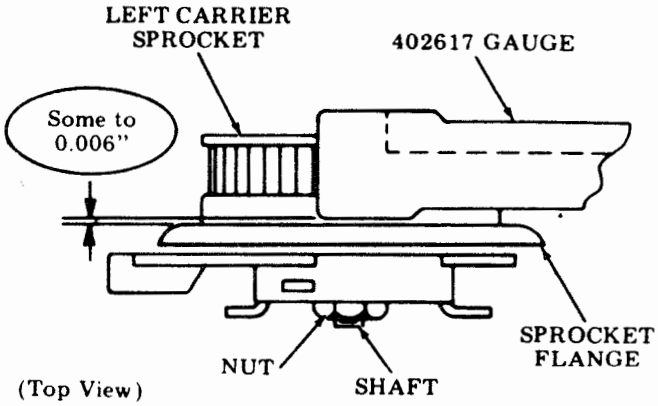

To Adjust (Tractor Feed, 40P102 and Late Design 40P101 Friction Feed)
Position the sprocket by turning nut at front of sprocket to meet requirement.

To Adjust (Early Design 40P101 Friction Feed only)
Position sprocket by turning nut at front of sprocket to meet requirement while holding shaft with an Allen wrench.

(132-Column Printers)

Requirement
The rear surface of the sprocket flange should clear the adjusting gauge by
Min some --- Max 0.006 inch
at its closest point when sprocket is in its normal operating position.

Install 402716 gauge. See Page 5-31.

To Check
Rotate carrier release lever clockwise until rear rim of sprocket just touches bottom of gauge. Take up play in sprocket assembly evenly to rear of printer.

To Adjust
Position 402716 gauge against backup bar. While holding the finger lever of sprocket hub parallel to track assembly and rotating the sprocket, turn adjusting nut clockwise until base of sprocket flange just contacts the gauge at its closest point. Turn adjusting nut back counterclockwise some to 45 degrees. This is equivalent to some to 0.004 inch.

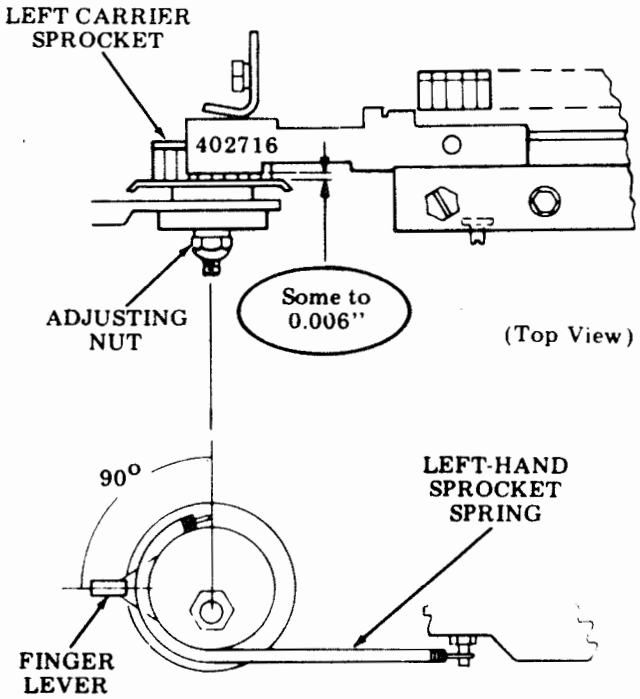

C. PRINTER (Contd)

ADJUSTMENTS (Contd)

RIGHT CARRIER SPROCKET (80 Column Friction or Tractor Feed)

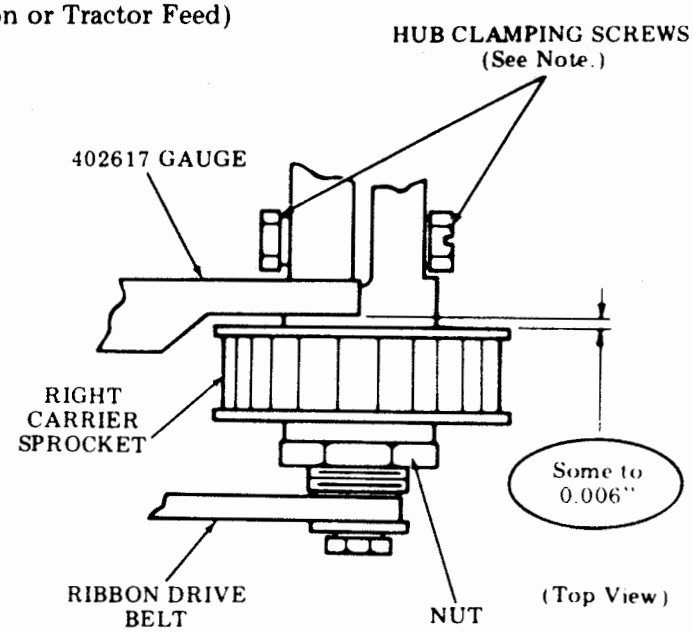

Requirement
Rear surface of sprocket should clear adjusting gauge by
Min some --- Max 0.006 inch.

To Adjust
Loosen two hub clamping screws (or one screw and one nut if so equipped). Turn nut at front of sprocket to meet requirement. Tighten hub clamping screws (or screw and nut).

Note: Some printers have one hub clamping screw and one hub clamping nut instead of two hub clamping screws.

(132-Column Printers)

Requirement
The rear surface of right carrier sprocket flange should clear gauge by
Min some --- Max 0.006 inch
at its closest point.

To Adjust
Position 402717 gauge against backup bar. Turn adjusting nut clockwise until rear surface of sprocket flange just contacts the gauge. Turn adjusting nut back counterclockwise some to 45 degrees. This is equivalent to some to 0.004 inch. Tighten hub clamp screws securely.

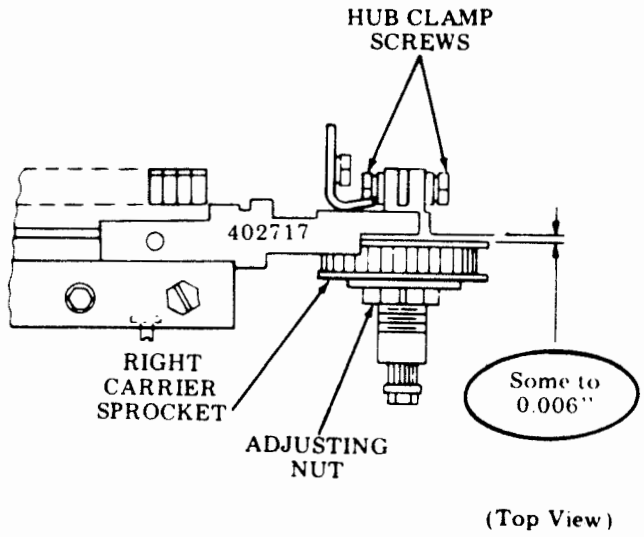

RIBBON GUIDE (Final)
(Friction Feed Printer)

Requirement (1)
There should be
Min 0.010 inch clearance
between ribbon guides and the face of a flag pallet on carriers having three fonts and the face of a font identification pallet on carriers having two fonts.

To Adjust
Loosen ribbon guide mounting screws friction tight. Position guide to meet requirement. Tighten mounting screws. Repeat the procedure with the other ribbon guide.

Requirement (2)
There should be
Min 0.006 inch clearance
between the ribbon guides and all pallet faces.

To Adjust
Seat pallets against the rear surface of the front flange of the left sprocket.

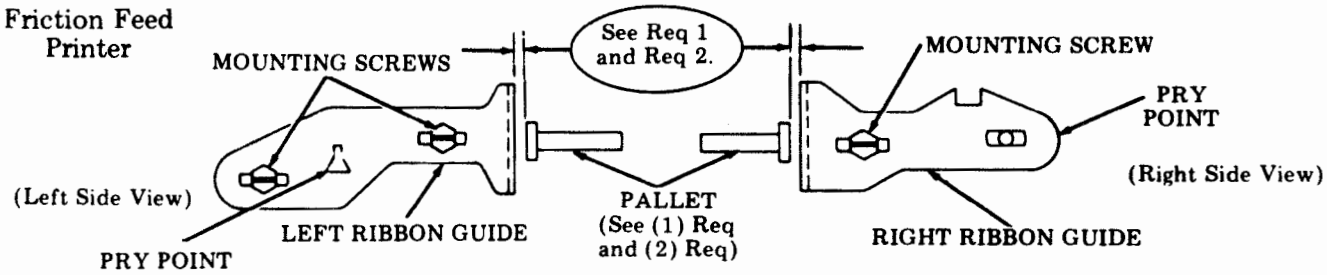

RIBBON GUIDE (Final)
(80-Column Tractor Feed Printer)

Requirement (1)
There should be
Min 0.010 inch clearance
between the ribbon shield where it contacts the ribbon guides and the face of a flag pallet on carriers having three fonts and the face of a font identification pallet on carriers having two fonts.

To Adjust
Loosen ribbon guide mounting screws friction tight. Position guide to meet requirement. Tighten mounting screws. Repeat procedure with other ribbon guide.

Requirement (2)
There should be
Min 0.006 inch clearance
between the ribbon shield where it contacts the ribbon guides and all pallet faces.

To Adjust
Seat pallets against rear surface of front flange of left sprocket.

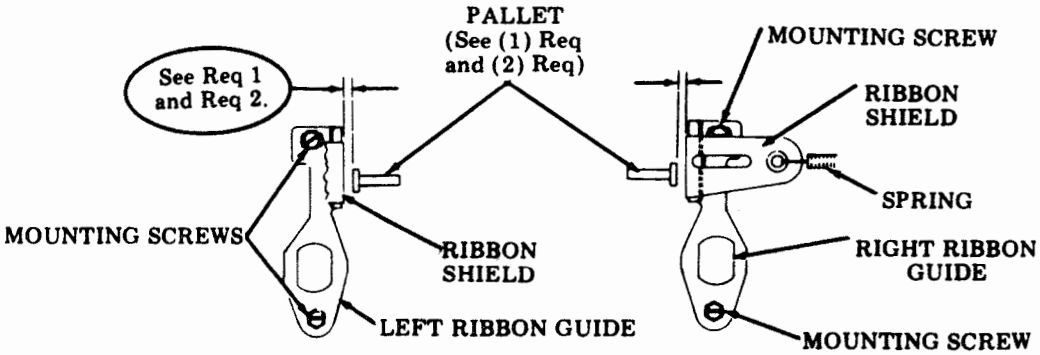

C. PRINTER (Contd)

ADJUSTMENTS (Contd)

RIBBON GUIDE (Final) (Contd)
(132-Column Tractor Feed Printer)

Requirement (A)
The left and right ribbon guides should be 0.006 inch to just touching the 402716 and 402717 adjusting gauges.

To Adjust
Loosen ribbon guide mounting screws friction tight. Position the 402716 and 402717 gauges against the backup bar and position the ribbon guides against the gauge surface. Tighten the ribbon guide mounting screws.

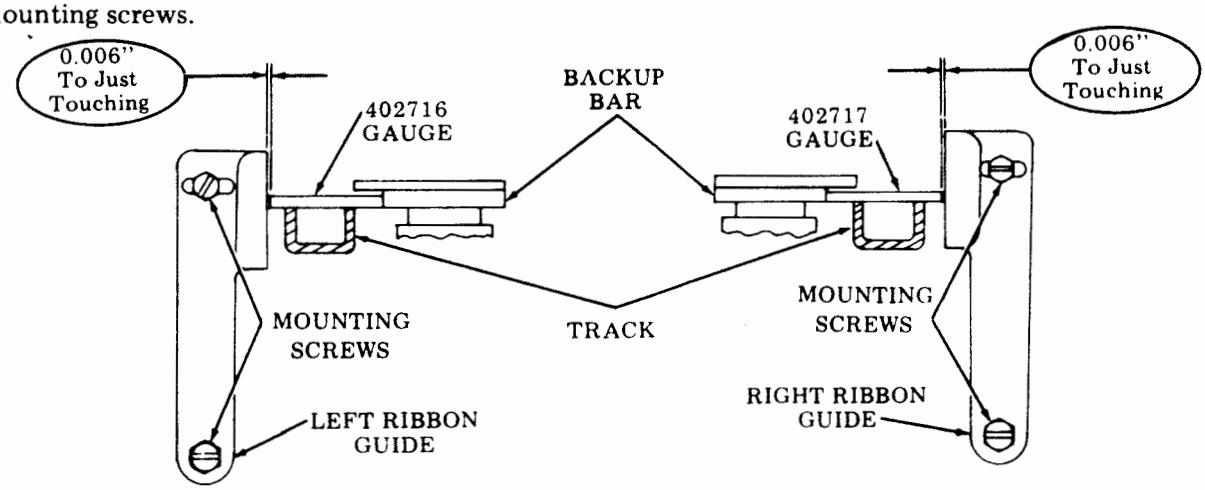

Note: The following requirement is a final functional check to assure adequate clearance between type pallets and ribbon guides and is made with a type carrier installed. Too much clearance between pallets and ribbon guides may cause ribbon smudge on the paper, making it difficult to make the PAPER POSITIONER adjustment.

Requirement (B)
There shall be a minimum of 0.010 inch clearance between the closest pallet and the ribbon guides.

To Check
Seat all pallets against the rear surface of the front flange of the left sprocket. Position a 0.010 flat gauge against the ribbon guide and rotate the type carrier one complete revolution by turning impeller gear by hand clockwise. Repeat the procedure with the other ribbon guide.

To Adjust
Recheck the following adjustments:
BACKUP BAR (Final)
LEFT AND RIGHT CARRIER SPROCKETS
RIBBON GUIDES (Final)

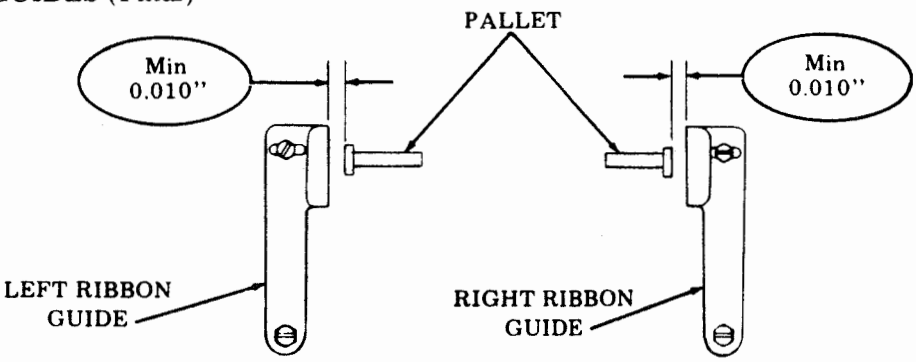

IMPELLER SHAFT SENSOR (Final — Under Power)

Requirement

The impeller sensor is to be positioned 2-3/4 clockwise turns from a point where any further counterclockwise motion of the adjusting screw would cause a column or columns not to print.

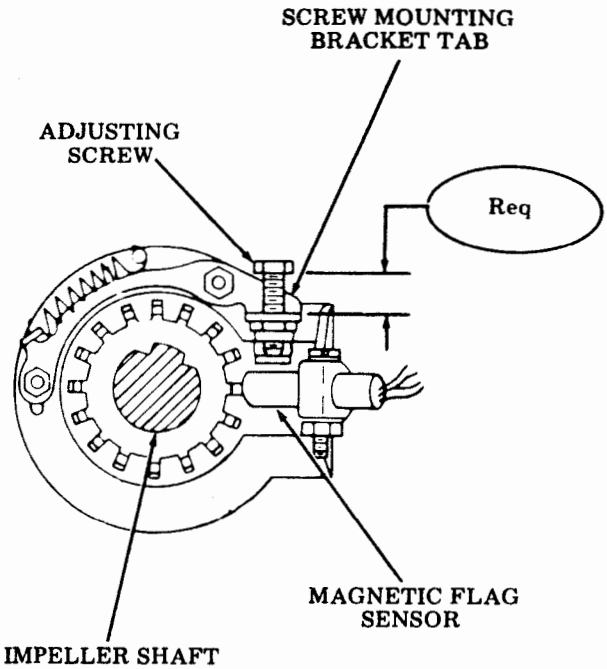

To Adjust

Step (A) With the unit in the Test position and printing the font identification symbol, turn impeller sensor adjusting screw (with a nut driver) COUNTERCLOCKWISE through a range where all columns print (approximately 5 to 10 turns) until a column or columns does not print.

Step (B) Slowly turn the adjusting screw CLOCKWISE just until all columns print for at least ten lines.

Step (C) Turn the adjusting screw CLOCKWISE an additional 2-3/4 turns.

Note 1: If while performing Step (A), a printing speed hesitation occurs before an individual column fails to print, reposition the flag sensor slightly to the right to enable printing to continue while completing the adjustment. See FLAG SENSOR (Final —Under Power) adjustment.

Note 2: The impeller shaft sensor is adjusted at the factory using equipment and techniques not available in the field. This adjustment should not be disturbed unless the unit has been disassembled, the printer logic card replaced, or there is sufficient reason to believe the sensor is not adjusted properly.

C. PRINTER (Contd)

ADJUSTMENTS (Contd)

IMPELLER SHAFT TO CARRIER PHASING (Final — Under Power)

Requirement
Printed characters must be printed fully from left to right.

To Adjust
Print some font identification characters using test switch. Turn printer off, disconnect ac power. If right portion of character is missing, turn knurled adjusting collar clockwise while holding impeller shaft gear away from collar.

If left portion of character is missing, turn knurled adjusting collar counterclockwise while holding impeller gear away from collar. Turn ac power on and repeat test to make sure requirement is met.

When multicopies are used, phasing should be adjusted to minimize clipping on the last copy with no clipping on the original.

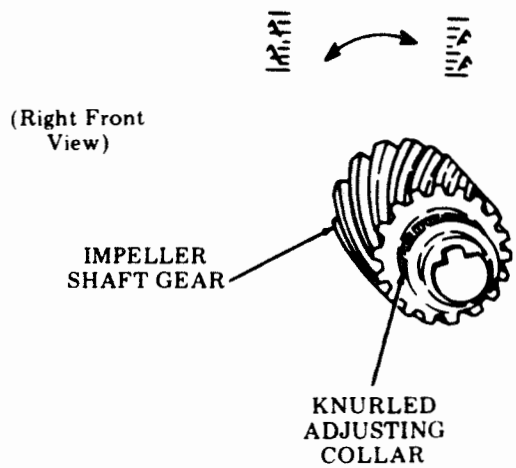

Tractor Feed Printer and Friction Feed Printer

Note: If the IMPELLER SHAFT TO CARRIER PHASING adjustment is readjusted by a substantial amount, the flag sensor position may have to be readjusted. See FLAG SENSOR (Final — Under Power) adjustment.

FLAG SENSOR (Final — Under Power)

Requirement
Flag sensor must be in approximately the midpoint between failure points of its range.

To Check
Print some font identification characters using the test switch.

To Adjust
Loosen locking screw(s) friction tight. While printing font identification symbol, slowly move the flag sensor to the left until a different character or no character is printing. Note reading on the range scale. Slowly move the flag sensor to the right until a different character or no character is printing. Note reading on the range scale. Position the flag sensor midway between the two failure points. Turn the printer off and tighten locking screw(s).

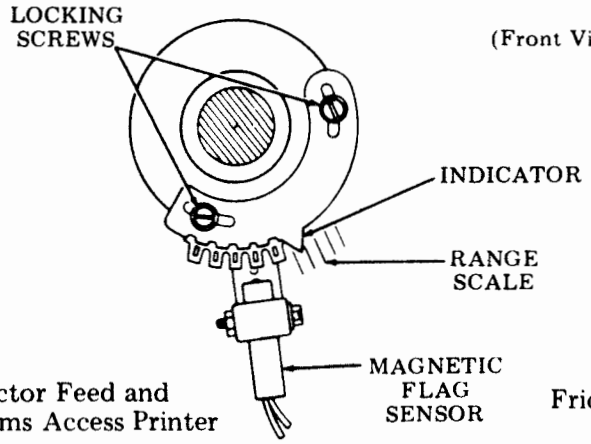

Tractor Feed and Forms Access Printer

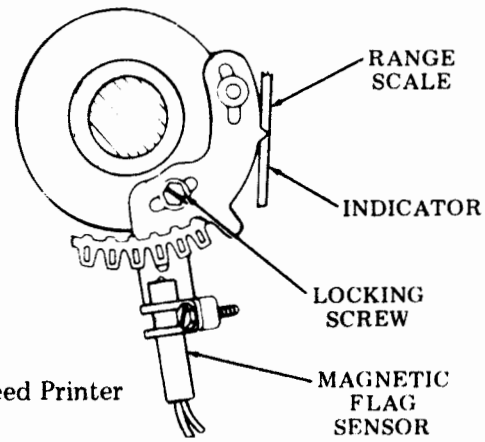

Friction Feed Printer

PAPER POSITIONER (Under Power)
(80-Column Friction, Tractor Feed, or 132-Column Tractor Feed)

Requirement (A)
The paper should be positioned as close to ribbon as possible without causing printed copy to become illegible due to ribbon smudging after a one minute printer idle period.

Requirement (B)
There should be no smudge when printing a text message (not the font identification symbol).

Friction Feed Printer

(Left Side View)

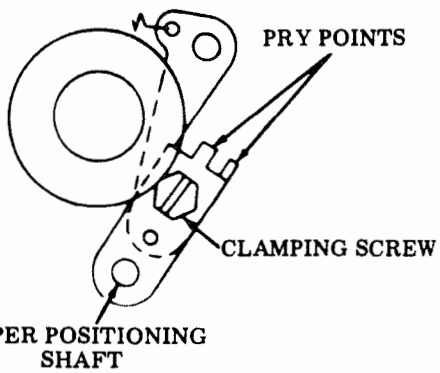

Tractor Feed Printer

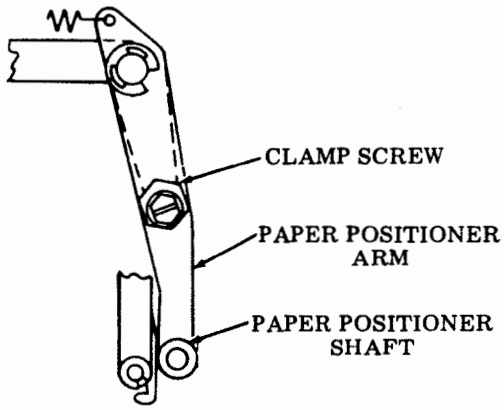

Note 1: These requirements do not apply when printing within two lines of a fold of fanfold paper.

To Adjust
Loosen clamp screws on left and right paper positioner arms and adjust arms to just eliminate marking on either side of paper. Paper should remain as close as possible to ribbon without marking to minimize impact noise and vertical misalignment. Tighten clamp screws.

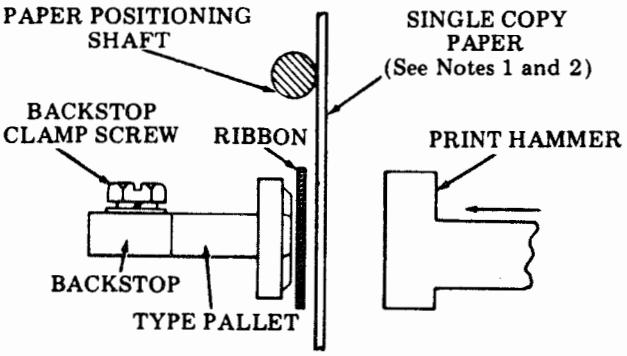

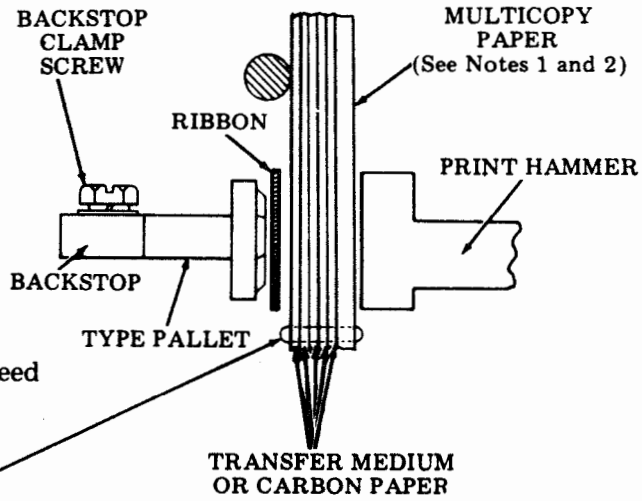

Tractor Feed

Staples or other means of fastening copies together should not be used until tested to insure that their presence will not interfere with the ribbon, printer hammers, or type pallets.

Note 2: Tractor Feed Printers Only — The factory final adjustment is made with a standard original plus three copies paper on the 132-column printer and with a standard original plus five copies paper on 80-column printer. Upon installation a refinement of this adjustment may be necessary dictated by the actual paper weight and number of copies being used.

C. PRINTER (Contd)

ADJUSTMENTS (Contd)

TYPE CARRIER PALLET ALIGNMENT

Requirement
The pallet location in the carrier shall be
0.125 inch --- 80-column printer
0.070 inch --- 132-column printer
from the stem end to the rear surface of the carrier.

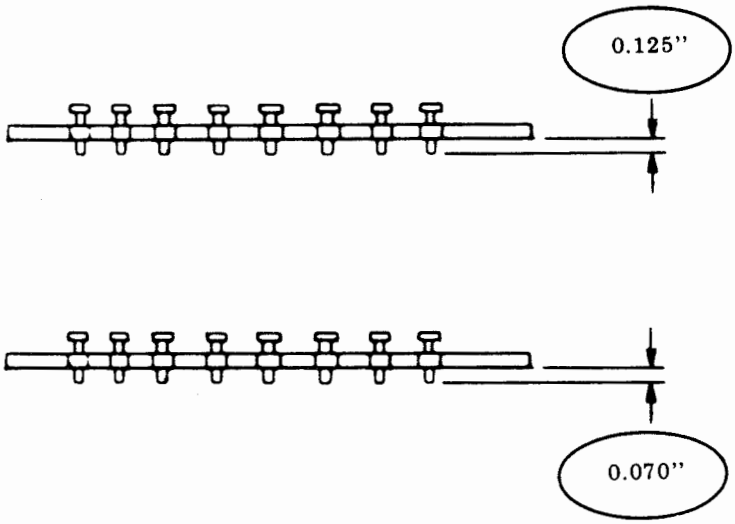

80-Column Printer

132-Column Printer

To Adjust
Move all pallets from position No. 1 to position No. 2.

Position No. 1

Position No. 2

Place type carrier into proper slot on the 402878 gauge. Seat all pallets into bottom of channel.

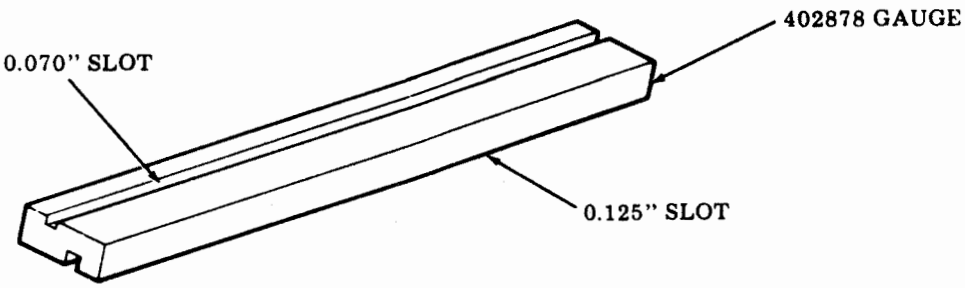

FORM-OUT CONTACT GAP (Preliminary) (Tractor Feed Printers)

Requirement
With form-out contacts fully open, gap between contacts should be
Min 0.020 inch --- Max 0.030 inch.

To Check
Depress the form selector lever.

To Adjust
Form contact spring to meet requirement.

Note: This contact is manufactured within the requirement and will remain so unless one or both contact springs have been deformed. If adjustment is required, adjust the spring which shows sign of such deformation.

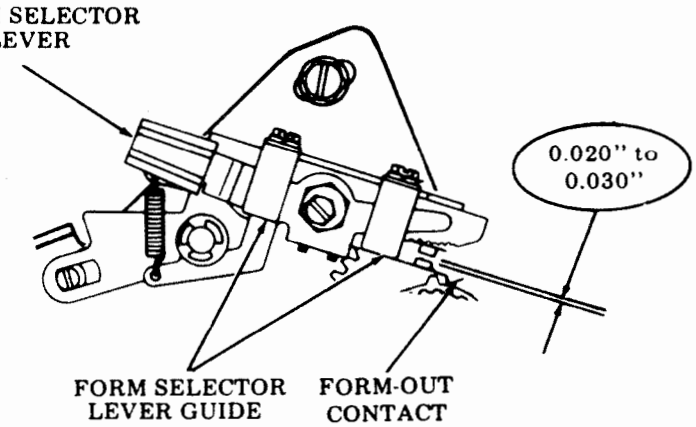

FORM SELECTOR LEVER GUIDE (Tractor Feed Printers)

Requirement
There should be up to 0.005 inch clearance between guide and form selector lever and selector lever must operate freely.

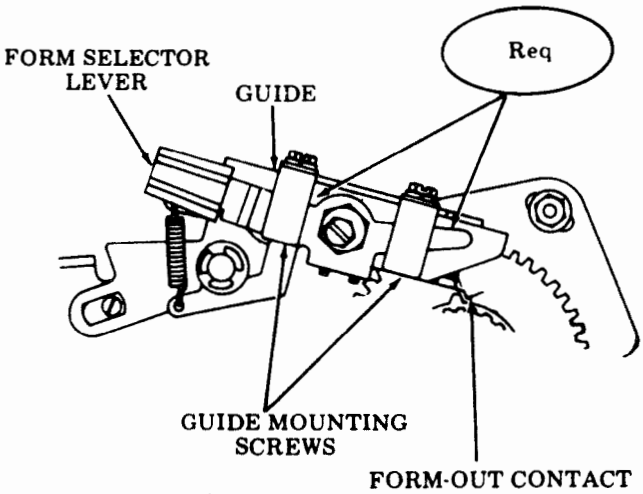

To Check
Form selector biased toward contact housing and selector lever operated through its entire range of motion.

To Adjust
Loosen the guide mounting screw friction tight and position guide to meet requirement. Tighten mounting screws.

C. PRINTER (Contd)

ADJUSTMENTS (Contd)

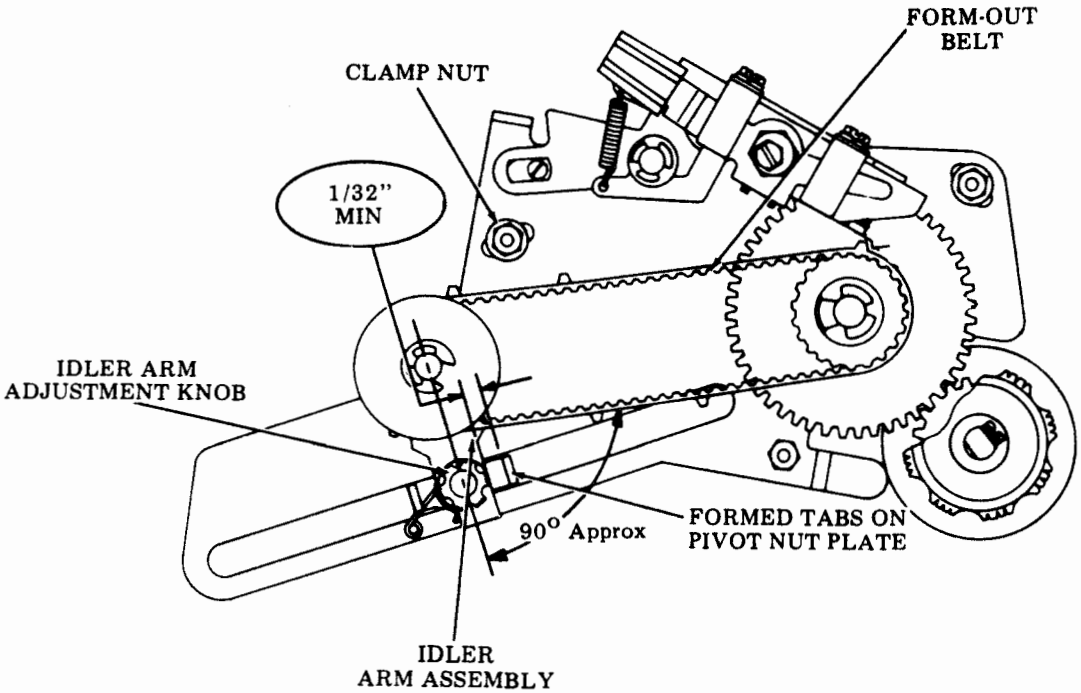

FORM-OUT BELT IDLER ARM (Tractor Feed Printers)

- Position form-out belt against respective sprocket flanges.

Requirement (A)
The centerline of the idler arm assembly should be positioned approximately 90 degrees to the flat (straight portion between sprockets) of the belt.

Requirement (B)
There should be a minimum of 1/32 inch between the right edge of the idler arm assembly and the formed tab on the pivot nut plate.

To Adjust
Loosen idler arm adjustment knob friction tight. With belt engaged in both sprockets and against the flanges of each sprocket, move the adjusting nut along elongated slot until requirements are met. Tighten knob.

Note: With the 402850 white belt it may not be possible to meet requirement (A) because of length of slot. The requirement will be considered met when the nut has been positioned against the left end of slot.

FORM-OUT CONTACT LATERAL (Preliminary) (Tractor Feed Printers)
(Early Design Only)

Requirement
Form-out contact assembly should be positioned on form selector lever such that the form-out contact tip is
Min 0.215 inch --- Max 0.231 inch
from outside surface of the form selector lever.

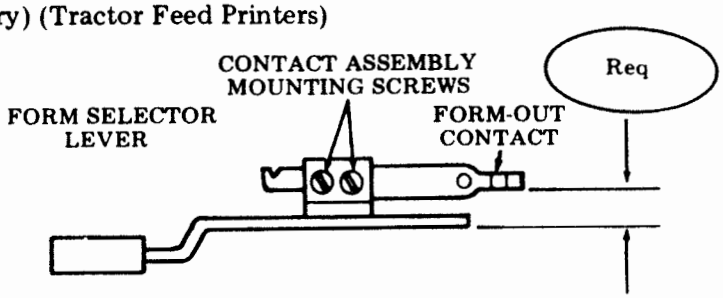

To Adjust
Loosen two contact assembly mounting screws and position contact to meet requirement. Tighten mounting screws.

Note 1: This adjustment must be made before form selector lever is assembled to contact housing bracket.

Note 2: Factory Adjusted — Should not normally require adjustment unless contact assembly has been removed.

FORM-OUT CONTACT LATERAL (Final) (Tractor Feed Printers)
(Early Design and Late Design)

Requirement (A)
The contact should be centered (as gauged by eye) on the short cam lobes.

Requirement (B)
The form-out contact must not touch the adjacent cam lobes when in positions 3 and 4.

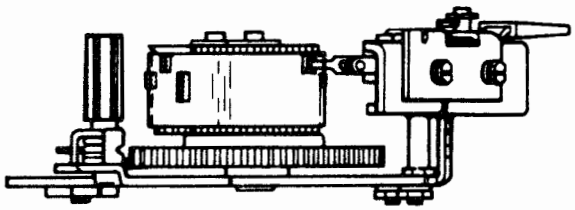

Req A

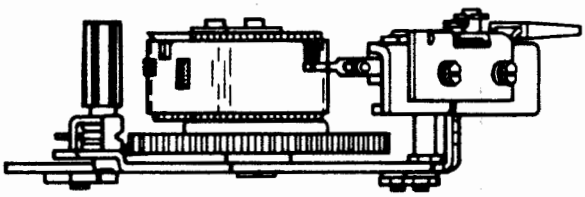

Req B

To Check (A)
With the form-out belt positioned against the flange of the form-out drive gear and in position No. 4.

To Check (B)
Rotate form-out gear.

To Adjust (Early Design)
Disassemble and refine FORM-OUT CONTACT LATERAL (Preliminary).

To Adjust (Late Design)
Loosen the two contact assembly mounting screws and position contact to meet requirements. Tighten mounting screws.

Late Design
(Screw Accessibility)

C. PRINTER (Contd)

ADJUSTMENTS (Contd)

FORM-OUT GEAR BACKLASH (Tractor Feed Printers)

Requirement

There should be a barely perceptible backlash between the form-out gear and line feed gear, checked at three positions of the form-out gear approximately 120 degrees apart. (While holding paper advance knob stationary, rotate form-out gear.)

Note: Disengage feed pawls to check form-out gear 120 degrees apart.

To Adjust

With clamp nuts friction tight (3 places), move form-out mechanism by its rear projection to meet requirement. Tighten clamp nuts.

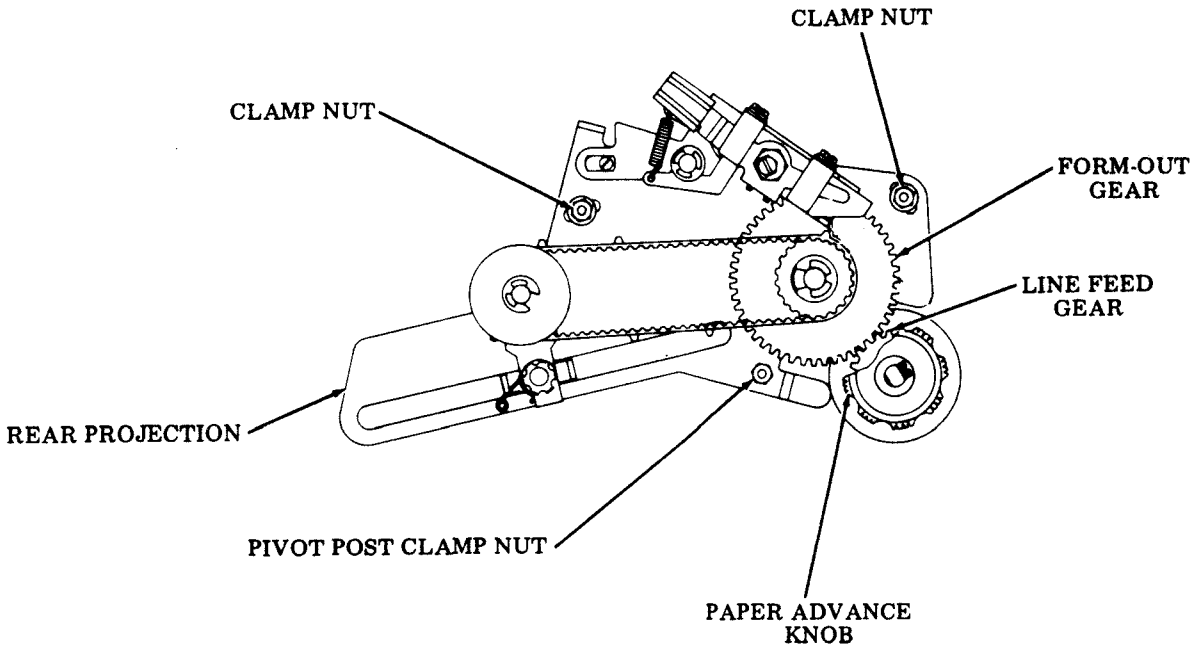

FORM-OUT CONTACT TO BELT SPACING (Preliminary) (Tractor Feed Printers)

Requirement

The high side of the eccentric bushing shall be positioned approximately 90 degrees to the form-out contact arm as shown.

To Adjust

Loosen the eccentric bushing clamp screw and position the eccentric to meet requirement.

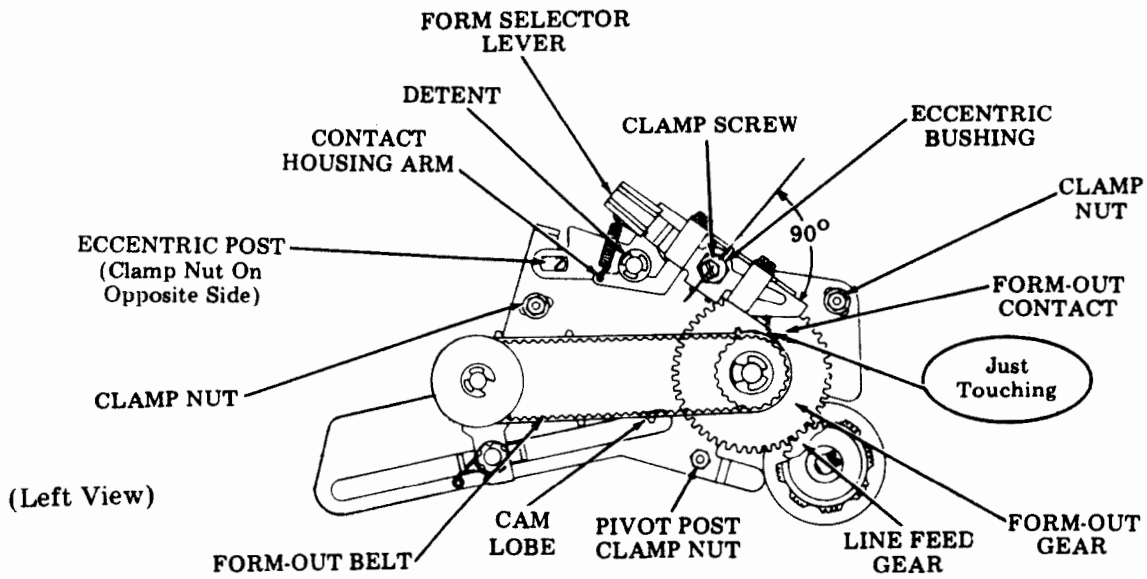

Tractor Feed

Requirement

With the form selector lever seated in the number 4 position detent groove, the form-out contact shall be just touching the form-out belt.

To Adjust

Loosen the eccentric post clamp nut friction tight and position the eccentric post to meet requirement.

Note: Keep eccentric post toward right side of slot.

C. PRINTER (Contd)

ADJUSTMENTS (Contd)

FORM-OUT CONTACT TO BELT SPACING (Final) (Tractor Feed Printers)

Requirement (A)
The contact shall have started to rise off the surface of the belt by
Min some --- Max 0.006 inch
when contacting the full width cam lobe.

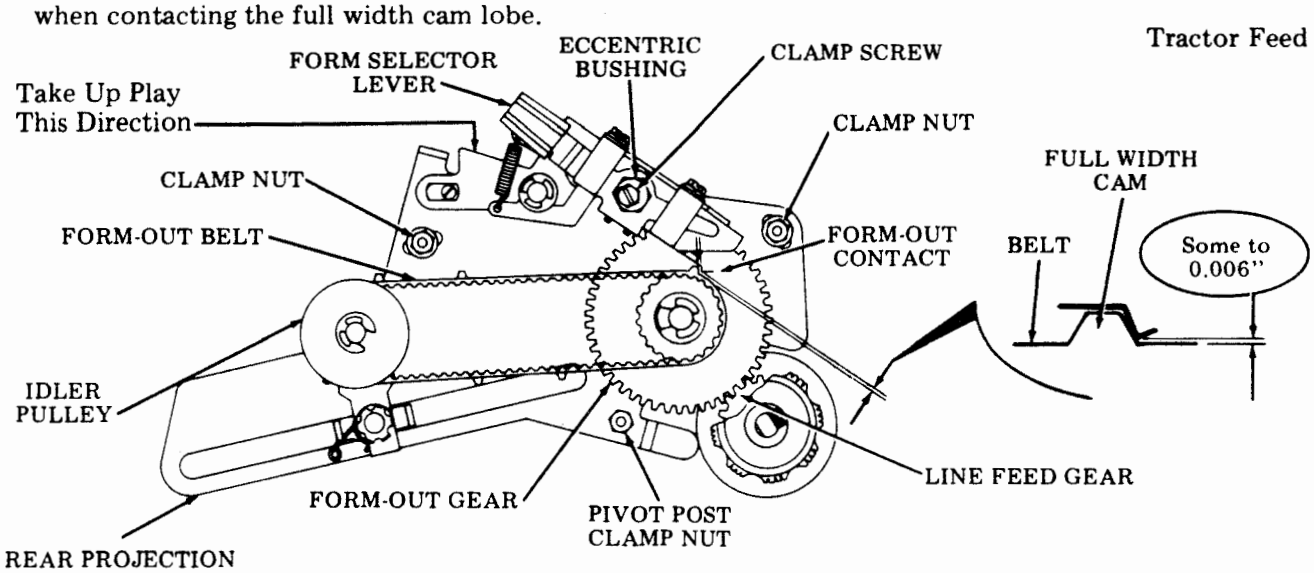

To Check
- Latch the line feed clutch.
- Position form selector lever in the fourth detent position.
- Move line feed pawls out of engagement with line feed gear.
- Rotate paper advance knob until the slope part of the contact just touches the long cam.
- Reengage line feed pawls. (See examples below.)
- Reengage paper advance knob.

Examples

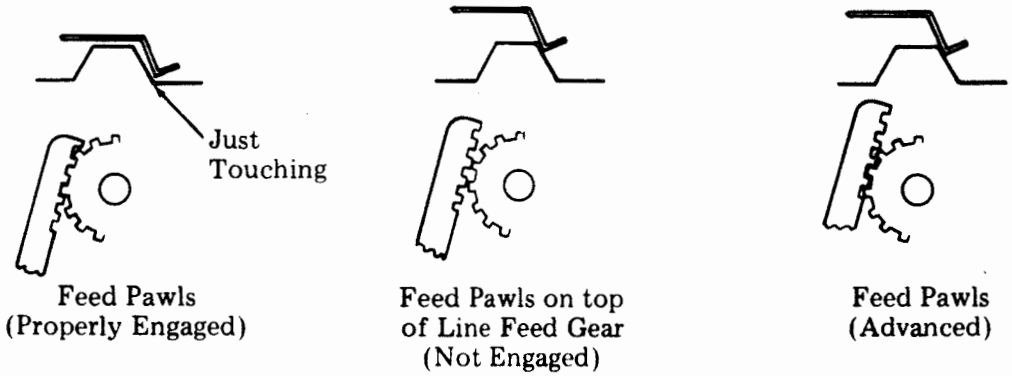

FORM-OUT CONTACT TO BELT SPACING (Final) (Tractor Feed Printers)

To Check

The some to 0.006 inch clearance adjustment will be considered met when the following conditions are present:

When the form-out belt idler pulley is rotated CCW with a force sufficient to take up the form-out gear and the form-out belt teeth to pulley backlash and then released, the contact tip touches the surface of the belt.

When the form-out belt idler pulley is rotated CW with a force sufficient to take up the form-out gear and the form-out belt teeth to pulley backlash and then released, the contact tip is raised off the surface of the belt by the form-out cam.

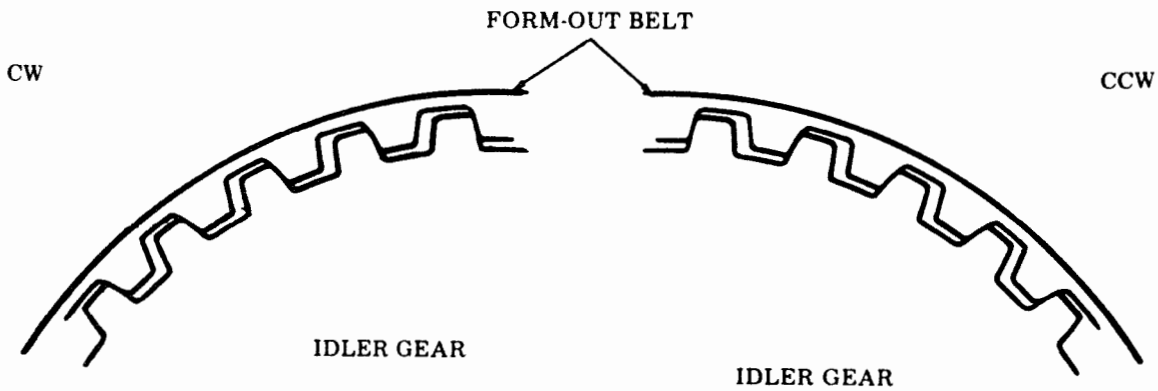

To Adjust

With eccentric bushing clamp screw friction tight, rotate eccentric bushing to position form-out contact left or right to meet Requirement (A). Tighten Eccentric bushing clamp screw.

Note: Perform form-out contact phasing Requirement (C). This step must be performed to properly phase the form-out mechanism.

C. PRINTER (Contd)

ADJUSTMENTS (Contd)

FORM-OUT CONTACT TO BELT SPACING (Final) (Tractor Feed Printers) (Contd)

Requirement (B)

The contact point gap shall be

Min 0.015 inch -- Max 0.020 inch

with the contact touching the form-out belt surface at a point the equivalent of 1/2 line feed space on the belt to the right of the full cam lobe, approximately 0.030 inch.

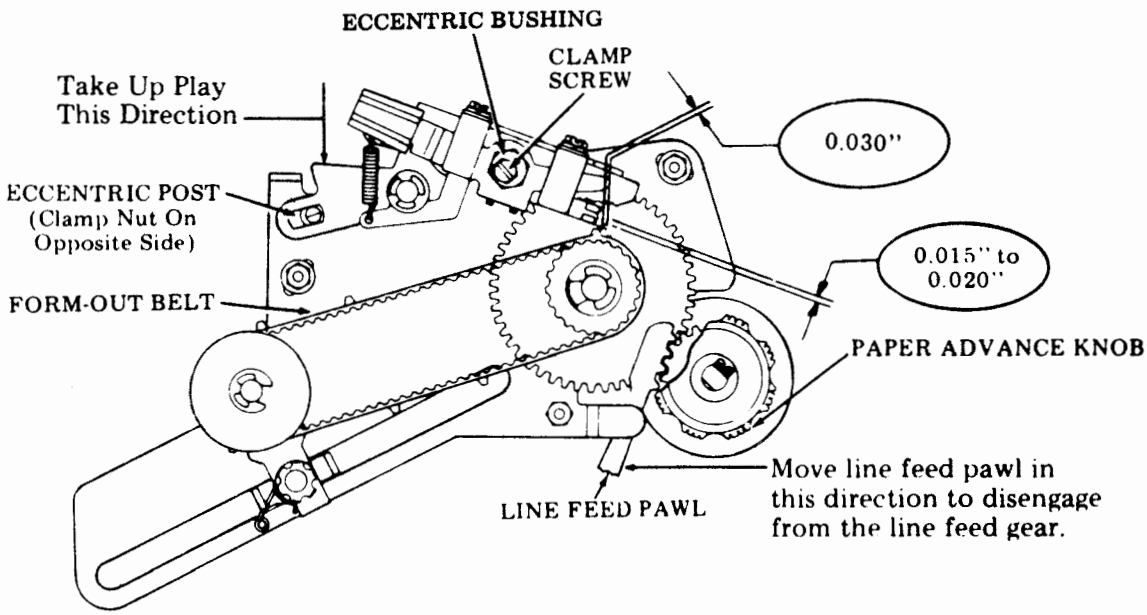

To Check

Move the line feed pawls out of engagement with the line feed gear and rotate paper advance knob to position form-out belt wide cam lobe approximately 0.030 inch to left of form-out contact "V", as gauged by eye.

To Adjust

Loosen the eccentric post clamp nut friction tight. Using very light pressure take up the play of the contact housing against eccentric post and rotate the eccentric post to move contact up or down to meet Requirement (B). Keep eccentric post toward the right side of slot. Tighten eccentric post clamp nut.

Note 1: Perform form-out contact phasing Requirement (C). This step must be performed to properly phase the form-out mechanism.

Note 2: If at any time the line feed gear is rotated with the line feed pawls disengaged, as when replacing the line feed, form-out or paper handling assemblies, the form-out mechanism must be properly phased (Note 1).

Requirement (C) (Form-Out Contact Phasing)

"V" part of contacts should be positioned in center of long cam as gauged by eye.

- Latch the line feed clutch.
- Position form selector lever in the fourth detent position.
- Move feed pawls out of engagement with the line feed gear.
- Rotate paper advance knob until the slope part of the contact just touches the long cam.

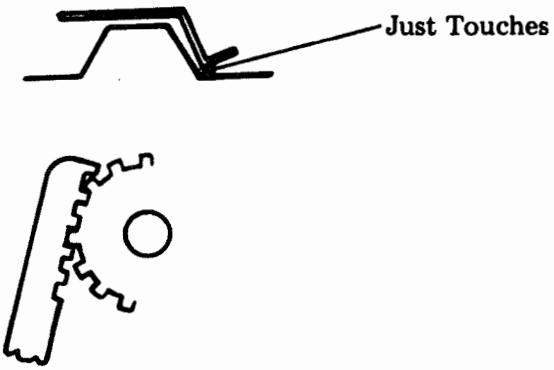

- Re-engage the line feed pawls.
- Re-engage paper advance knob.

To Check

(1) Manually energize line feed magnet.
(2) Rotate line feed clutch.
(3) Latch line feed clutch.

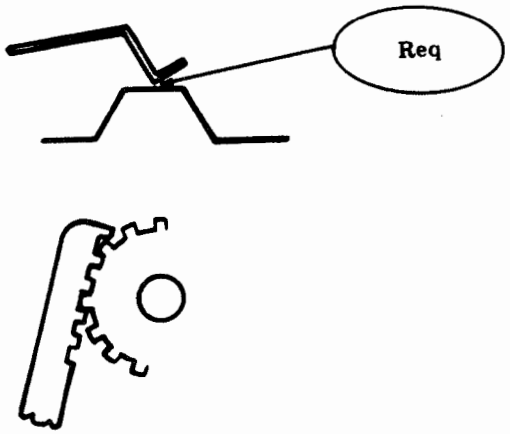

To Adjust, Recheck Form-Out Contact to Belt Spacing (Final) Requirements (A) and (B).

C. PRINTER (Contd)

ADJUSTMENTS (Contd)

TRACTOR PHASING (Tractor Feed Printers)

Requirement
The phasing marks on the right and left tractors should be in line with each other.

To Adjust
Remove left tractor from splined shaft, turn tractor, and reassemble on splined shaft with its phasing mark at the same spline shaft groove as phasing mark of other tractor.

Note: Factory adjusted; should not normally require adjustment unless tractors are removed or replaced.

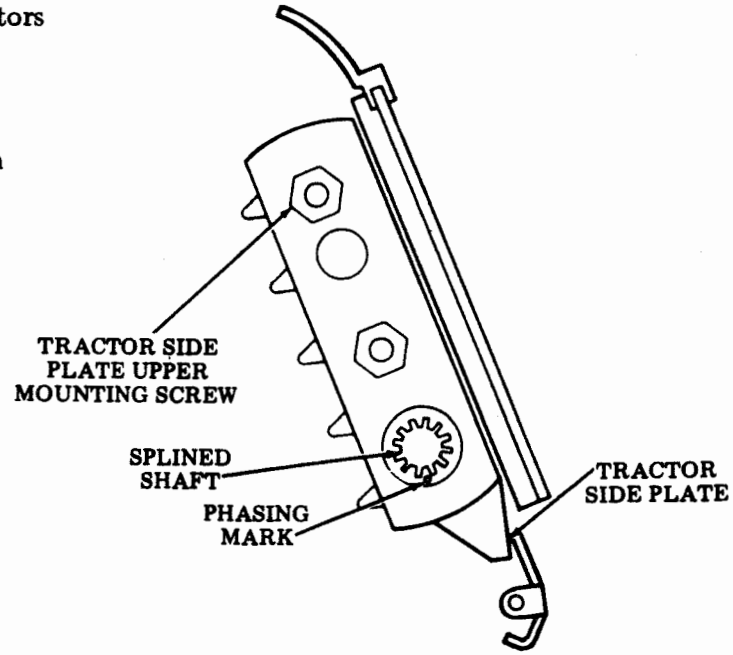

Tractor Feed Printer

TRACTOR LID (Tractor Feed Printers)

Requirement
The upper paper guide should contact the side plate of both right and left tractors.

To Adjust
Loosen tractor side plate upper mounting screws friction tight. Position left-hand tractor side plate approximately in the center of its adjustment range and tighten its mounting screws. Position right-hand tractor side plate to meet requirement. Tighten right-hand tractor mounting screw.

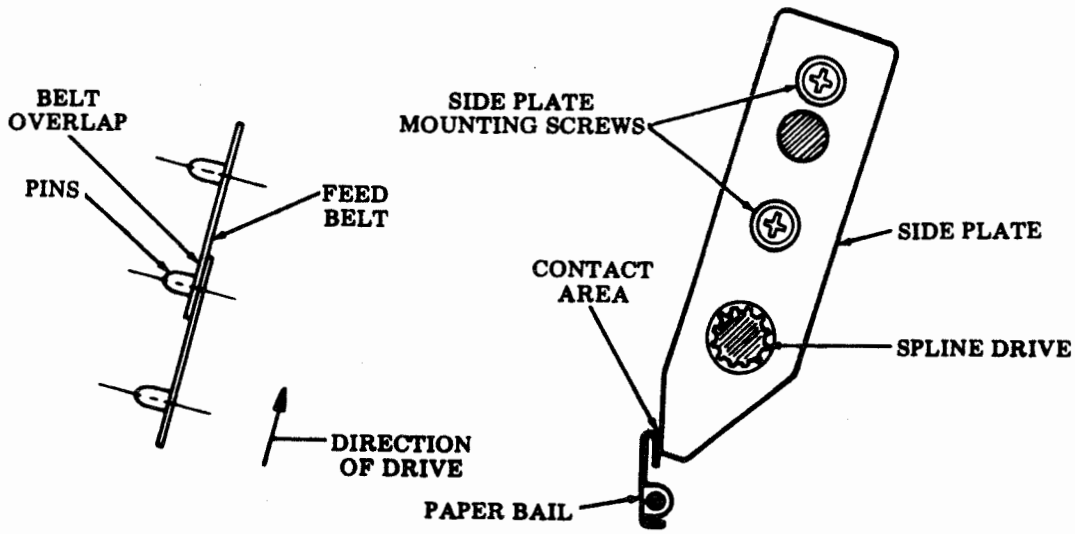

RIBBON TRACKING (For Tractor Feed Printers equipped with new ribbon tracking parts but not equipped with reinker mechanism)

Requirement

If a new ribbon does not track as described, the roller posts should be checked for squareness. The posts carrying the front roller must be vertical (in reference to the ribbon guide top plate) as gauged by eye. The posts carrying the rear rollers must be vertical in the front to rear direction and the right roller should lean towards the right by a slight amount (less than 1 degree) and the left roller should lean towards the left by a slight amount (less than 1 degree).

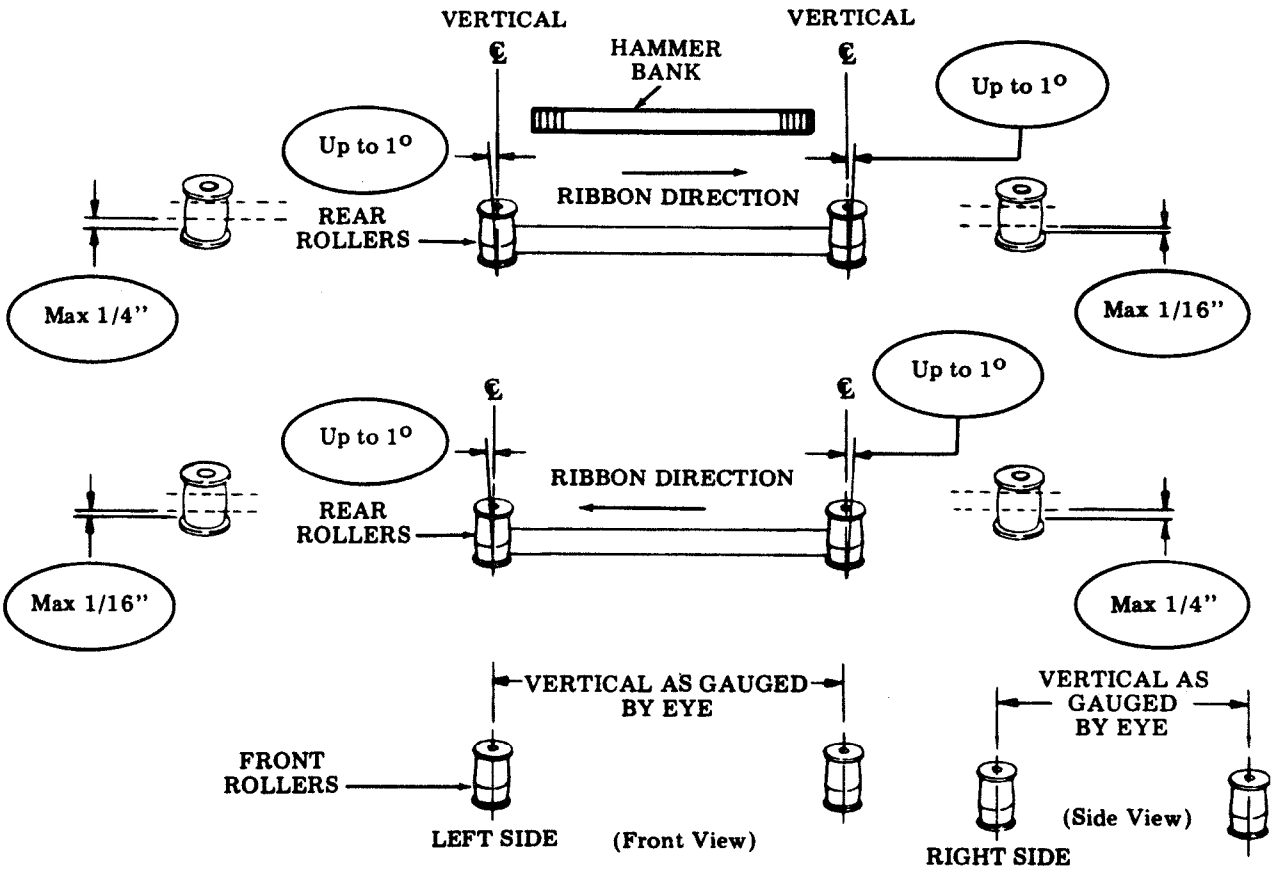

To Check

Using a new ribbon and with unit running, check position of ribbon on the rear rollers of the right and left ribbon guide arms as follows:

If ribbon is being wound on the right-hand spool, the ribbon should ride against lower flange of the right roller; however, it should not ride either so low as to cause a permanent curl to form in the ribbon or higher than 1/16 inch above the lower flange. For left roller, the ribbon should ride with no curl to 1/4 inch above lower flange.

If ribbon is being wound on the left-hand spool, the ribbon should ride against lower flange of the left roller; however, it should not ride either so low as to cause a permanent curl to form in the ribbon or, higher than 1/16 inch above lower flange. For right roller, the ribbon should ride with no curl to 1/4 inch above lower flange.

If rollers do not meet requirement or ribbon is not tracking properly, the vertical alignment of the roller posts may be refined. To lower ribbon track, increase the amount the rear rollers lean outwards (the right roller to the right and the left roller to the left). To raise ribbon track, do the opposite. Caution must be used not to overadjust. A 1/4-inch spin-tight socket wrench will slip over roller post and can be used for adjusting.

C. PRINTER (Contd)

ADJUSTMENTS (Contd)

RIBBON TRACKING (For 80- or 132-Column Tractor Feed Printers equipped with reinker mechanism)

Requirement

With the ribbon tracking in its lowest position on the right hand roller, ribbon moving in either direction, the ribbon should not ride so low as to cause a curl to form on the lower flange of the roller or any higher than Max 1/16 inch above the lower flange.

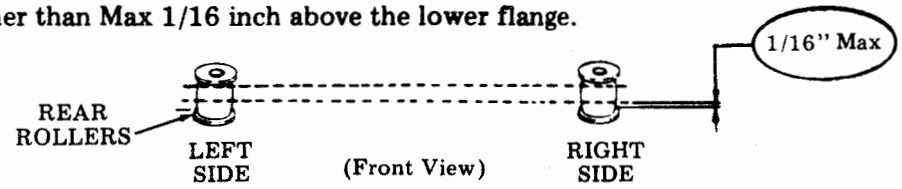

Requirement

With the ribbon tracking in its lowest position on the left hand roller, ribbon moving in either direction, the ribbon should not ride so low as to cause a curl to form on the lower flange of the roller or any higher than Max 1/16 inch above the lower flange.

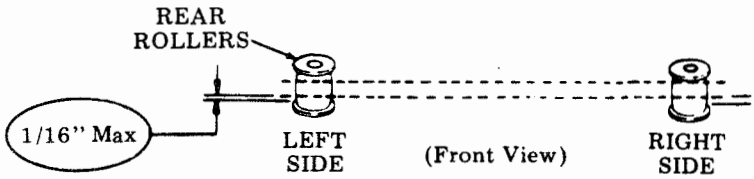

To Check

Using a new ribbon and the unit running, check the position of the ribbon on the rear rollers of the right and left ribbon guide arms as the ribbon moves towards the right and then as it moves towards the left. See that the ribbon is tracking properly in both directions; if not, refine the adjustment. Tighten the right and left adjusting bracket mounting screws and eccentric clamp screws.

To Adjust

If the new ribbon does not track per this requirement, loosen the right and left adjusting bracket mounting screws and eccentric clamp screws. If the ribbon is tracking high on the right hand roller, rotate the high point on the eccentric toward the left. If it is tracking low, move the high point on the eccentric towards the right. If the ribbon is tracking high on the left hand roller, rotate the high point on the eccentric towards the right. If it is tracking low, move the high point on the eccentric towards the left.

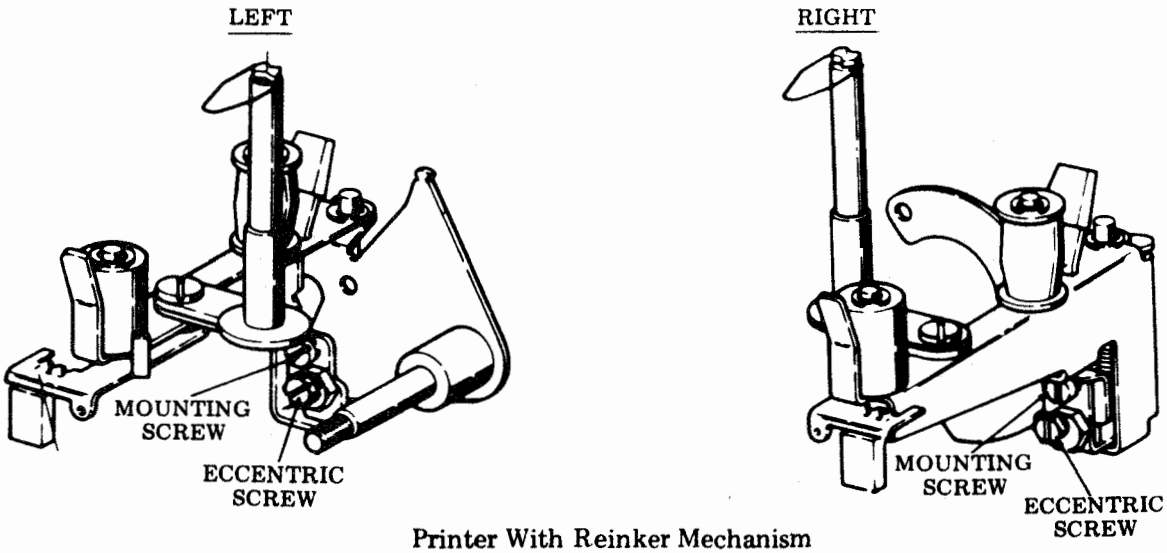

Printer With Reinker Mechanism

Note: On units equipped with reinker mechanism, if the ribbon cannot be made to track properly, check and see that the posts on the ribbon feed mechanism are square and that the retainer bracket (408989 on 80-column or 402903 on 132-column) has the correct angle for the guide posts. The correct angle between the top surface of the bracket and the top surface of the two ears, used to mount the ribbon guide posts, should be approximately 234 degrees on 80-column printer or 229 degrees on 132-column printer.

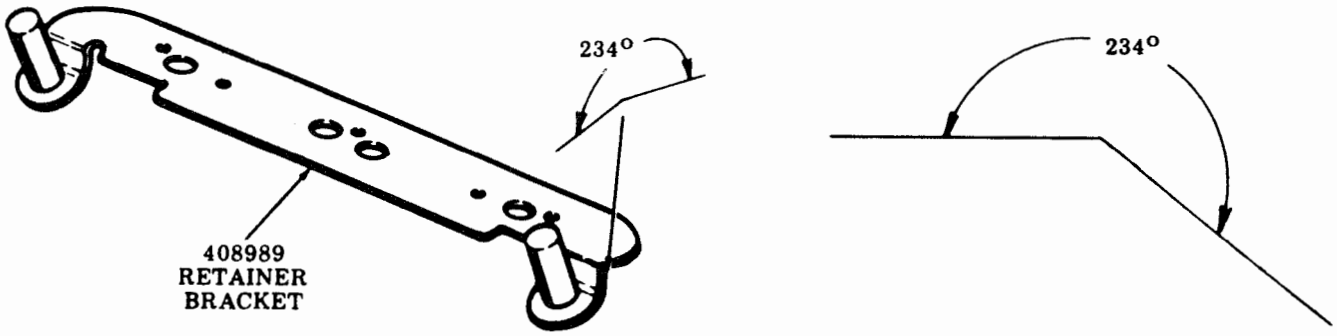

80-Column Printer

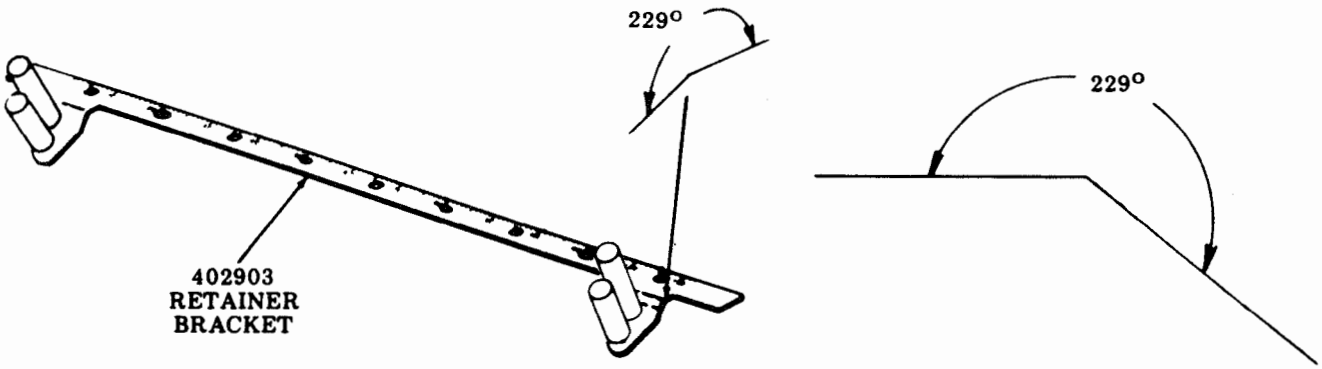

132-Column Printer

C. PRINTER (Contd)

ADJUSTMENTS (Contd)

POWER SUPPLY VOLTAGE

Requirement
Voltage reading should be -24 V dc ± 1%.

Tractor Feed Printers
CABLE AND PLUG CONNECTIONS

Remove printer logic circuit card.

Plug the 402779 line cord with switch into the 402781 line cord adapter. Plug the 402781 adapter into J113 connector, the top rack and panel connector located on the left rear side of the printer.

With the switch on the 402779 line cord in the OFF position, plug the line cord into a three-prong grounded power source.

Plug the 402782 jumper plug into J114 connector, located immediately below J113 on the left rear side of the printer.

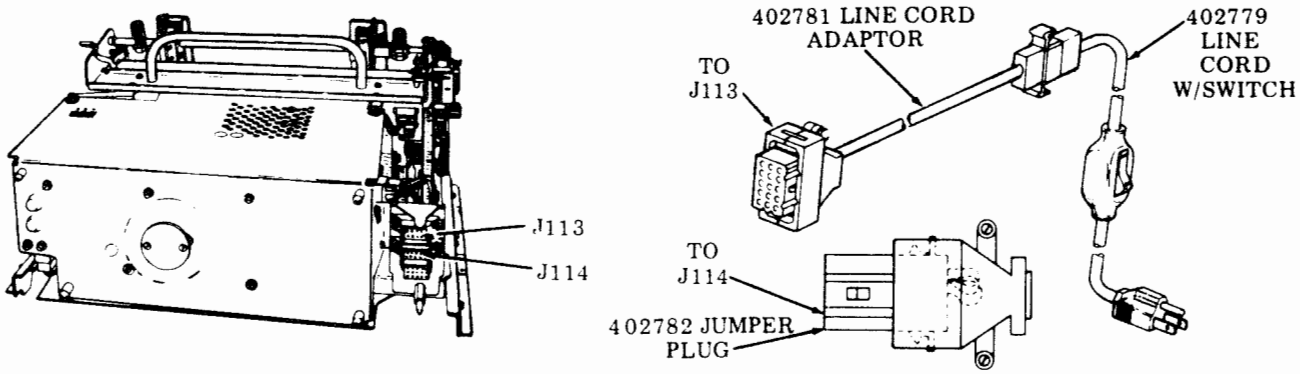

Friction Feed Printers
CABLE AND PLUG CONNECTIONS

Remove printer logic circuit card.

Plug the 402779 line cord with switch into the ac power connector (3-pin connector), J100, located at the left rear side of the printer. Verify that the switch is in the OFF position. Plug the other end of the 402779 line cord with switch into a three-prong grounded power source.

Plug the 402780 jumper plug into P106 located at the right rear top side of the printer.

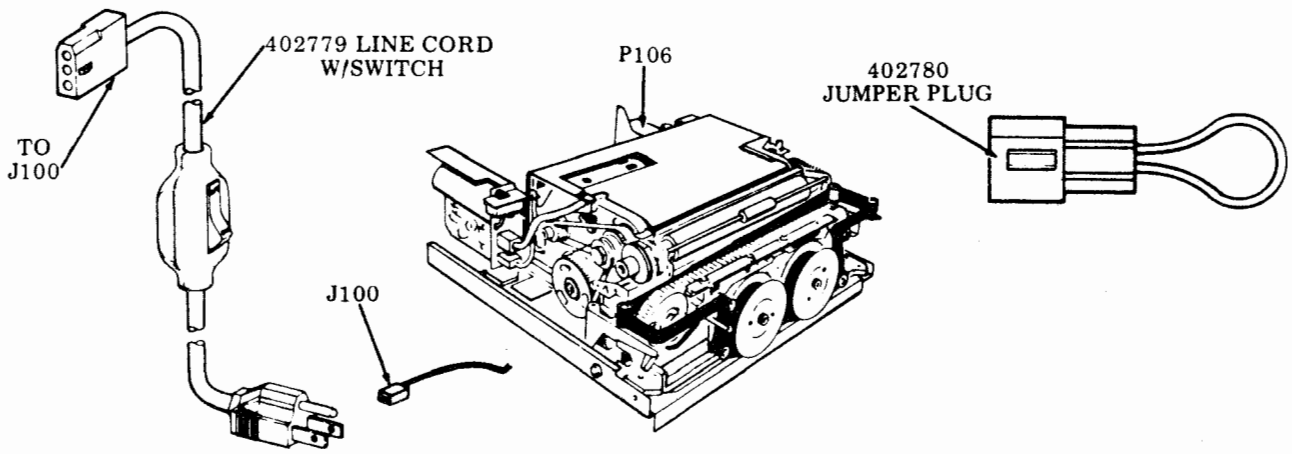

Connect applicable test cable (shown below) to the 408646 test assembly.

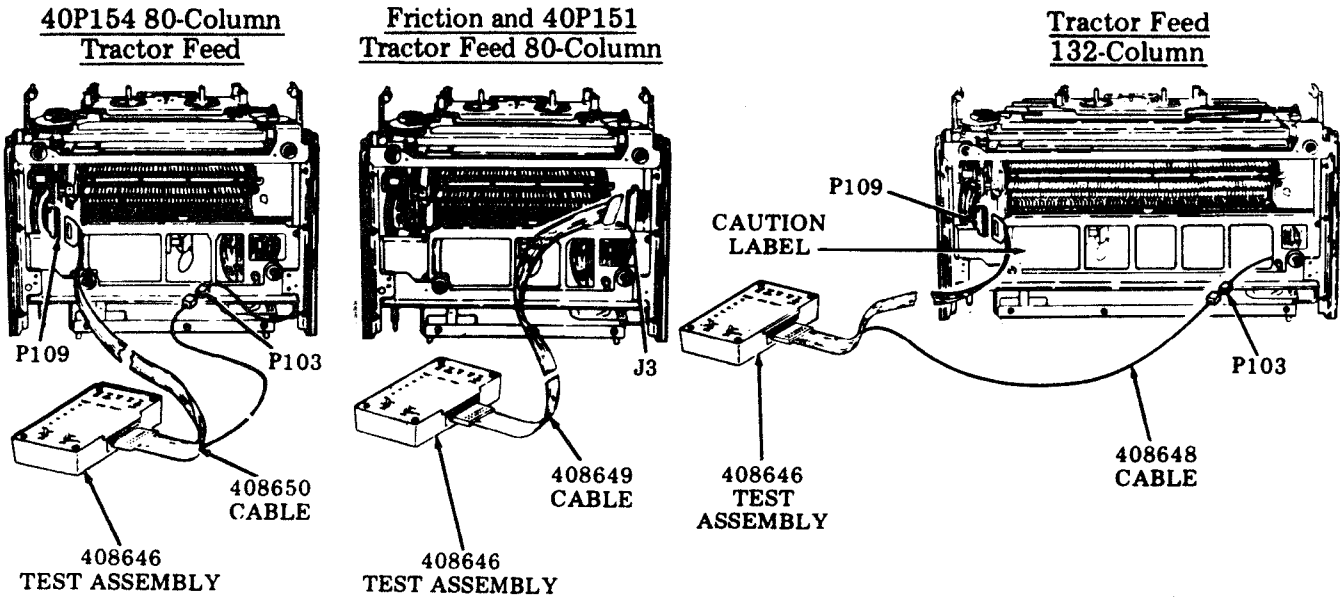

Caution: Observe caution label on 408648, 408649, or 408650 when connecting plug.

To Check

With a volt-ohmmeter, check -24 V dc±1% between TP1 and TP3 on the 408646 test assembly. Operate 402779 line cord with switch to ON.

To Adjust

If voltage is outside the required limits, adjust R9 resistor on voltage regulator circuit card.

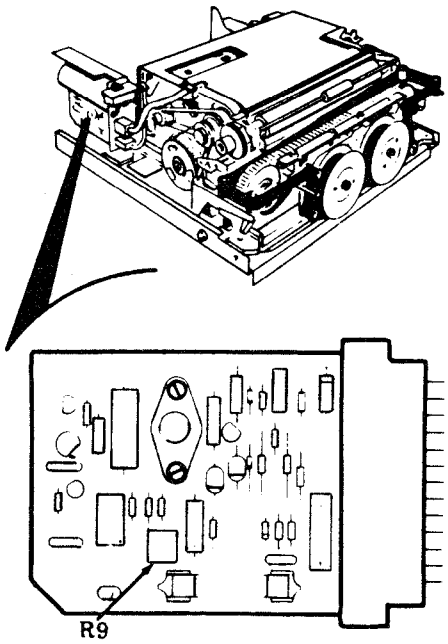

80-Column Friction Feed

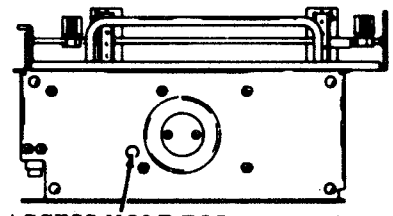

80-Column Tractor Feed

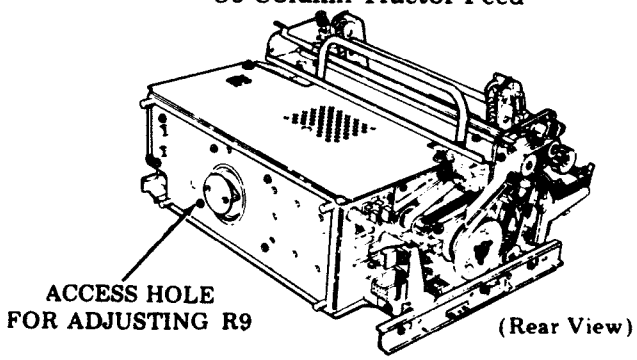

132-Column Tractor Feed

D. OPCON

The clearance between the cover and keytop is the only adjustment provided on the opcon. Normally, readjustment is not necessary unless the cover is replaced or if there is an interference between keytop and the cover.

COVER-TO-KEYTOP ADJUSTMENT

Requirement

Gap approximately equal in four places shown.

To Adjust

Remove the cover (see Page 6-36, 401100 Cover). Loosen three mounting screws friction tight on both sides of console.

Insert screwdriver blade into adjusting slot and move keyboard assembly forward or to the rear to gain "gap" clearance. Tighten screws, replace cover and check gaps.

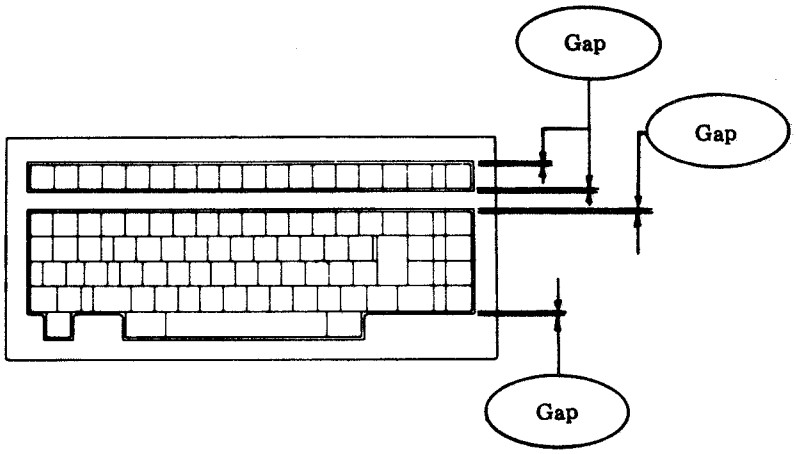

NOTE: If gaps required are not approximately equal after reassembly, remove cover and repeat adjustment procedures.

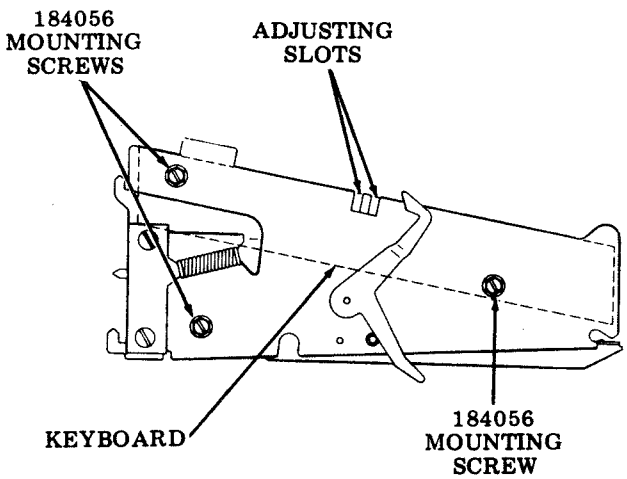

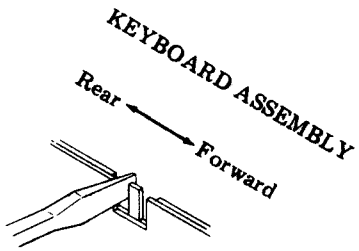

E. CASSETTE DRIVE

1. GENERAL

Adjustments that require major disassembly of the cassette drive are not covered in this manual at this time.

Adjustments are grouped according to the mechanism (cassette holder or drive mechanism), and in the sequence recommended for a comprehensive "in-the-field" adjustment. One electrical adjustment of the 410764 card "Open Line Frequency" is shown.

Identification drawings and tables are included to locate the mechanisms and list the adjustments related to these mechanisms.

The instruction "friction tight" means to tighten to the point where friction keeps the parts from moving, but they are still loose enough to move for adjustment purposes.

Spring or belt tensions are checked with a spring scale held at the angle shown in the adjustment illustration. Springs that do not meet requirements, and for which no adjustment procedure is given, should be replaced.

After adjustment is complete, tighten any screws or nuts loosened to make the adjustment.

Tools Required: 406131 Gauge (Brake and Clutch Gap)
406130 Wrench, Driver (402274/402275 Drive Hubs)

2. ASSEMBLIES

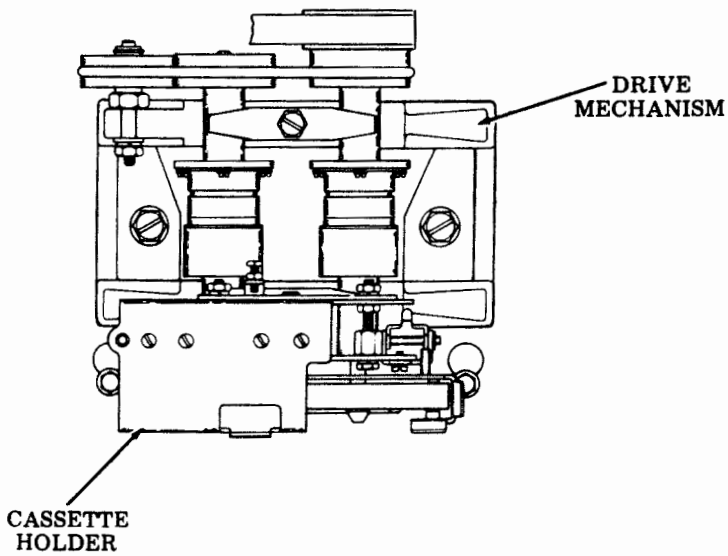

E. CASSETTE DRIVE (Contd)

2. ASSEMBLIES (Contd)

Cassette Holder

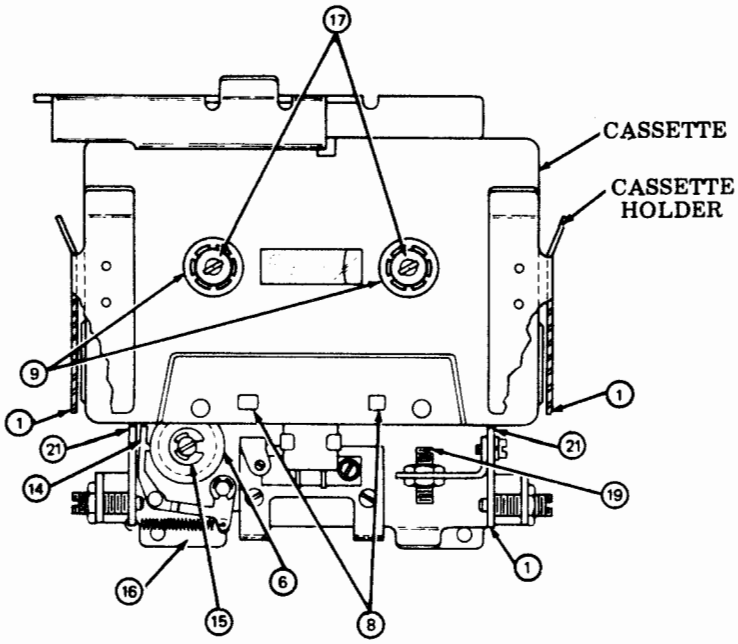

(Front View)

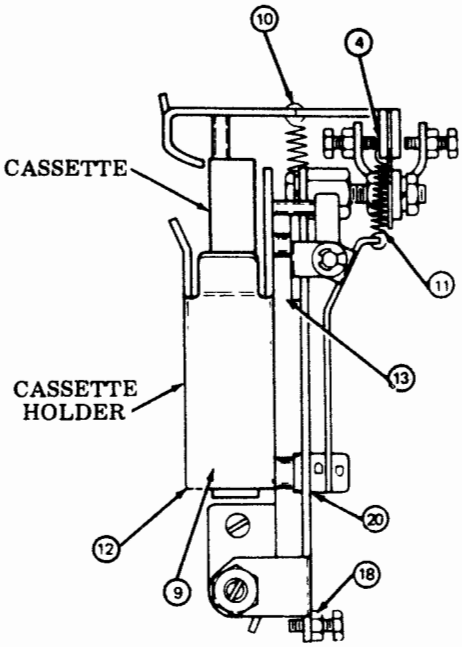

(Right Side View)

CASSETTE HOLDER ADJUSTMENTS	ADJUSTMENT REFERENCE PAGES
1 Cassette Holder	5-63
2 Latch (Preliminary and Final)	5-64
3 Latch Stop Screw (Rear)	5-65
4 Latch Stop Screw (Front)	5-65
5 Switch Height	5-66
6 Tape Cleaner	5-67
7 Run Lamp Mounting	5-67
8 Head	5-68
9 Plate With Cassette Holder	5-68
10 Cassette Latch Spring	5-69
11 Sensing Bail Spring	5-69
12 Cassette Pressure Spring	5-69
13 Cassette Holder Pressure Spring	5-70
14 Bobbin Latch Spring	5-70
15 Bobbin Spring	5-70
16 Cassette Holder Stop	5-71
17 BOT-EOT Lamp Mounting	5-71
18 BOT-EOT Sensor Tube	5-72
19 Cassette Downstop	5-72
20 Stepper Spring	5-73
21 Drive Hub Spring	5-73

Drive Mechanism

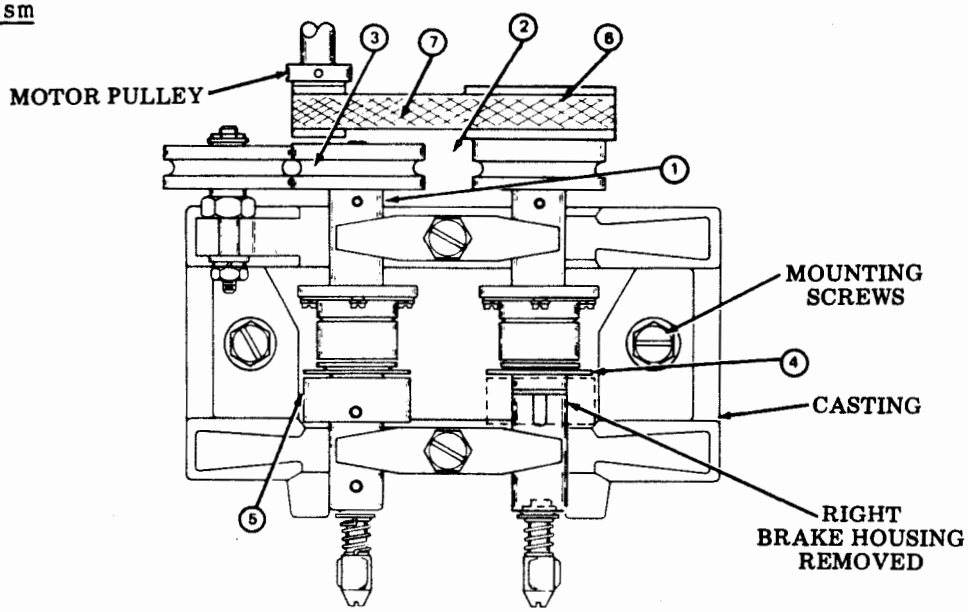

DRIVE MECHANISM ADJUSTMENTS	ADJUSTMENT REFERENCE PAGES
① Pulley and Shaft Endplay	5-74
② Pulley Alignment	5-74
③ Belt ("O" Ring)	5-74
④ Clutch	5-75
⑤ Brake	5-75
⑥ Motor Pulley	5-76
⑦ Motor Drive Belt	5-76

3. CASSETTE HOLDER ADJUSTMENTS

CASSETTE HOLDER

(1) Requirement
With a standard cassette latched in position, there should be equal clearance (as gauged by eye) between both sides of the cassette and the cassette holder.

(2) Requirement
Endplay between the cassette holder and the pivot screws
Min Some---Max 0.010 inch.

To Adjust
With the locknuts friction tight, adjust pivot screws until the requirements are met. Tighten locknuts.

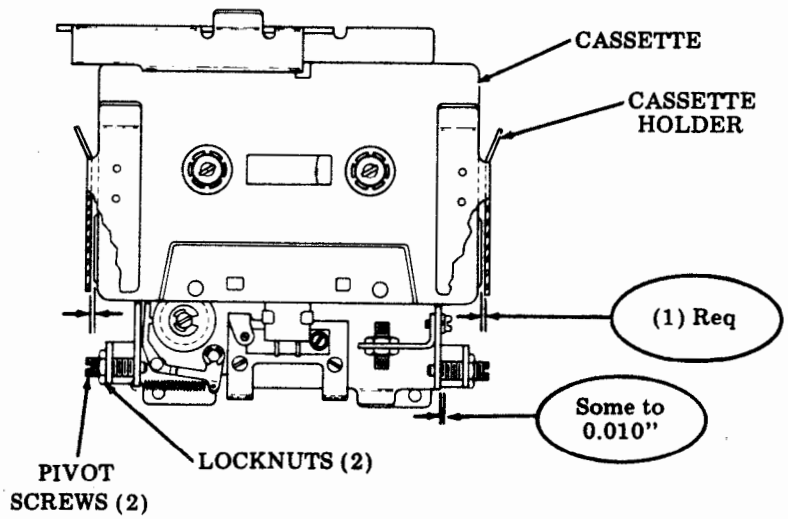

E. CASSETTE DRIVE (Contd)

3. CASSETTE HOLDER ADJUSTMENTS (Contd)

LATCH (Preliminary)

(1) Requirement
With a standard cassette in place and the cassette latched, the clearance between the cassette holder and the stop post should be
Min 0.005 inch---Max 0.015 inch.

(2) Requirement
With a standard cassette in place and the cassette holder latched, the clearance between any point and the latch should be
Max 0.012 inch.

To Adjust
With the rear locknuts loosened, adjust the two front stop nuts equally (preliminary) until the requirement is met. Tighten locknuts.

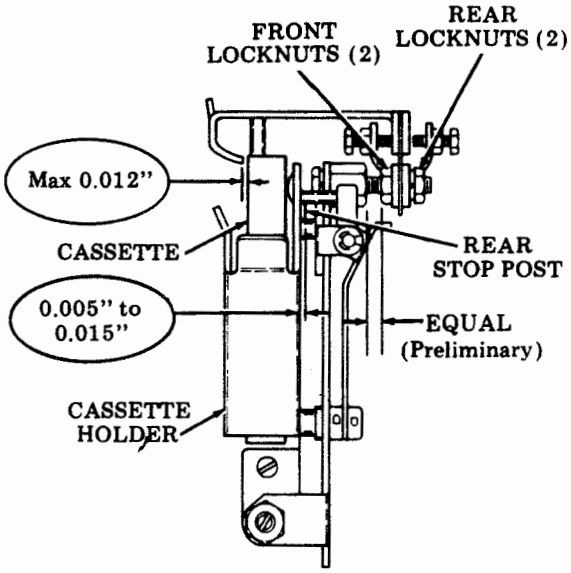

LATCH (Final)

(1) Requirement
With a standard cassette placed (wrong side out) in the cassette holder and the cassette holder rotated until the latch is resting on the cassette, clearance between the cassette and either end of the latch should be
Min Some---Max 0.015 inch.

(2) Requirement
The two switch actuators should be centered with their respective hole or slot, as gauged by eye.

(3) Requirement
With the cassette removed, the write inhibit switch actuator should clear the cassette holder when it is moved in and out.

To Adjust
Maintain front locknuts position, loosen the rear locknuts, position the latch and switch to meet the requirements. Tighten locknuts.

NOTE: Recheck PRELIMINARY LATCH adjustment. Refine if necessary.

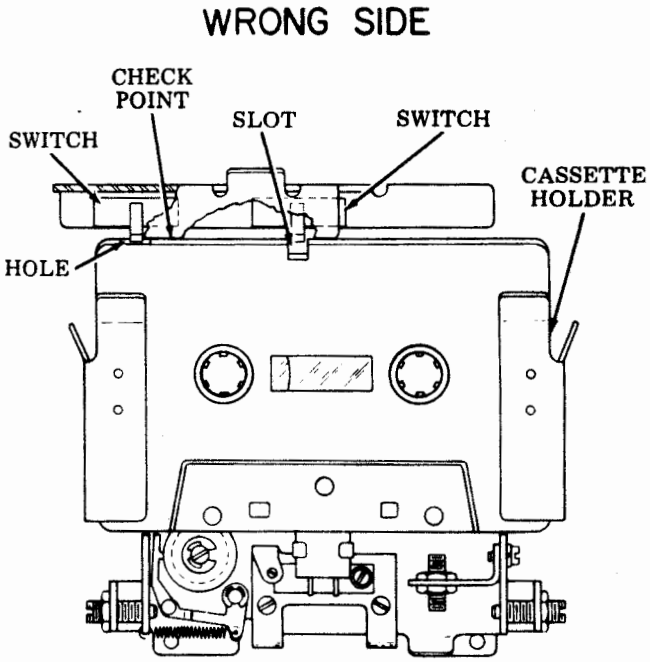

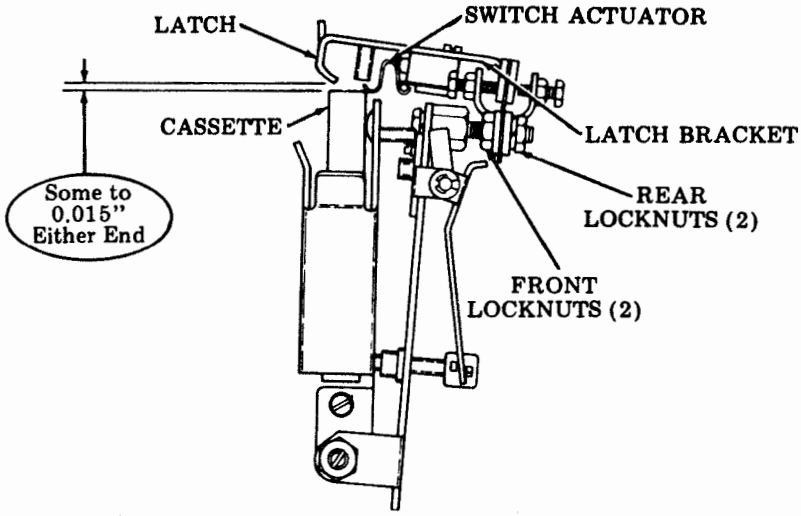

LATCH STOP SCREW (Rear)

Requirement
With the latch raised to its uppermost position, there should be clearance between the latch and a standard cassette of
Min 0.030 inch---Max 0.075 inch.

To Adjust
With locknut loose, position rear stop screw until the requirement is met. Tighten locknut.

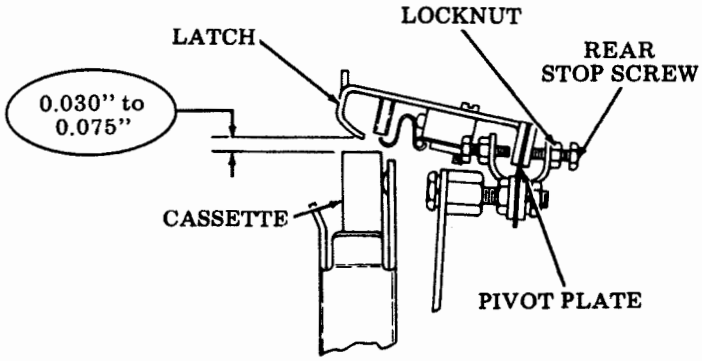

LATCH STOP SCREW (Front)

(1) Requirement
As the cassette holder with a standard cassette installed is pivoting toward the latched position, the cassette should strike the latch and cam the latch upward.

(2) Requirement
In the latched position, the latch should rest on the cassette and there should be clearance between the front stop screw and the latch bracket of
Min Some---Max 0.005 inch.

To Adjust
With the locknut loose, position the front stop screw until the requirement is met. Tighten locknut.

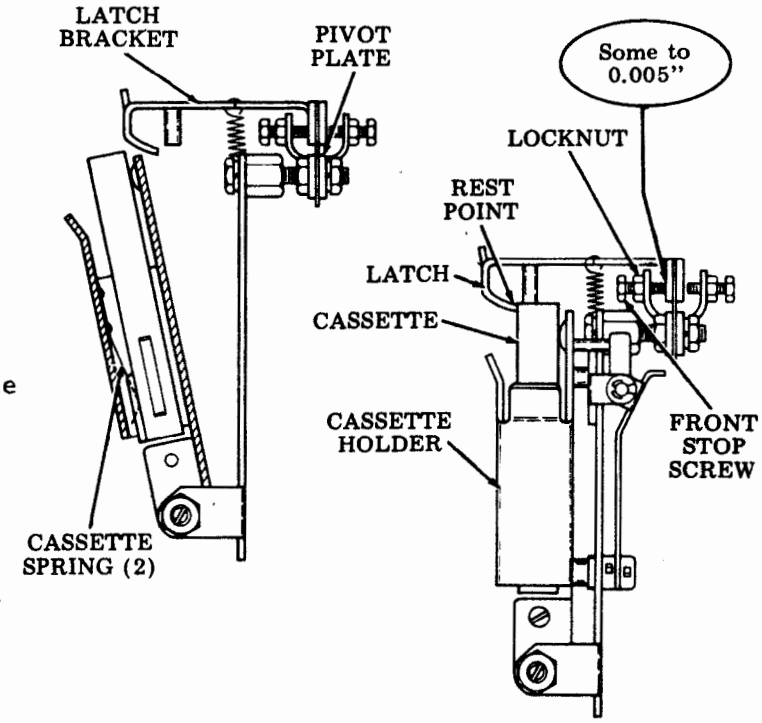

NOTE: Requirements (1) and (2) have to be checked with cassette spring holding cassette in place against the rear of the cassette holder.

E. CASSETTE DRIVE (Contd)

Switch Height

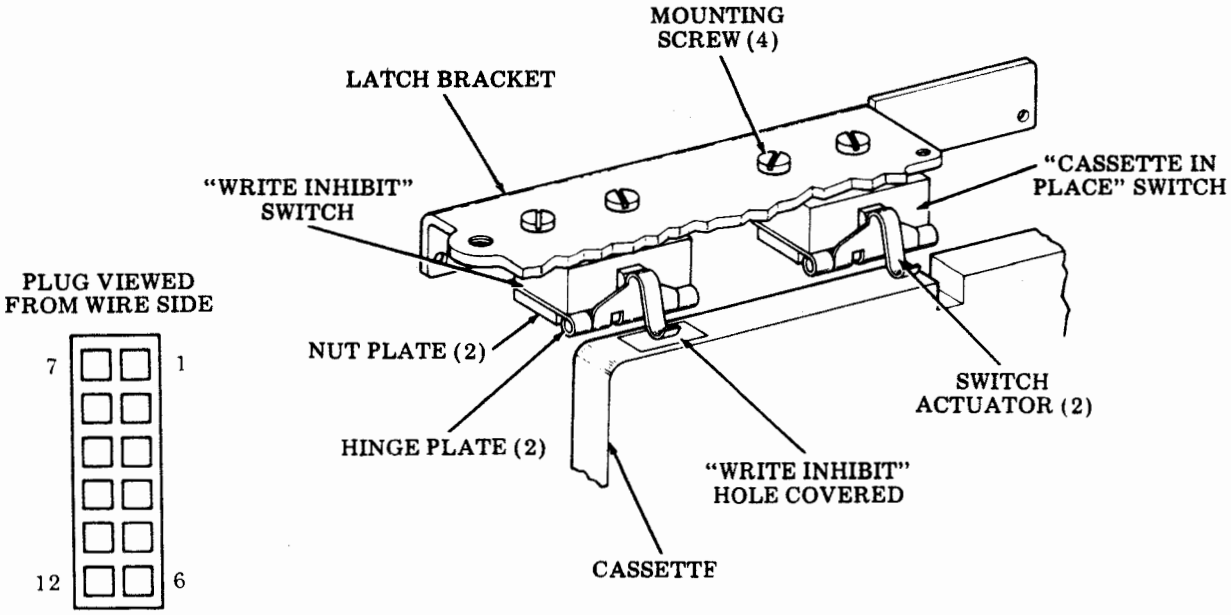

(1) Requirement
As a standard cassette (right side out) is loaded and unloaded into position, the two switches should operate at approximately the same time.

To Check
Operation may be determined by the audible "click" of switches or by use of a continuity checking device, on terminals 7 and 8, ("Write Inhibit" switch) and terminals 1 and 2 ("Cassette in Place" switch) to indicate contact closure.

(2) Requirement
There should be some overtravel left on the two switch actuators.

To Check
Check for some clearanc[illegible]een the switch actuator and the cassette, without bottoming the act[illegible]t the switch.

To Adjust
With the switch m[illegible]s friction tight, position the hinge plate until the requirements [illegible]hten mounting screws.

NOTE: Power r[illegible]n unit when this measurement is taken. Recheck LATCH adjustm[illegible]ssary.

TAPE CLEANER

(1) Requirement
With a standard cassette in the loaded position, the magnetic tape should be in contact with the cleaning fabric.

(2) Requirement
There should be
Min Some---Max 0.030 inch
clearance between cassette and bobbin on the side with least clearance.

(3) Requirement
The bobbin should step at least every second time the cassette is inserted.

To Adjust
With the locknut friction tight, position the bobbin vertically to meet the requirement. Tighten locknut.

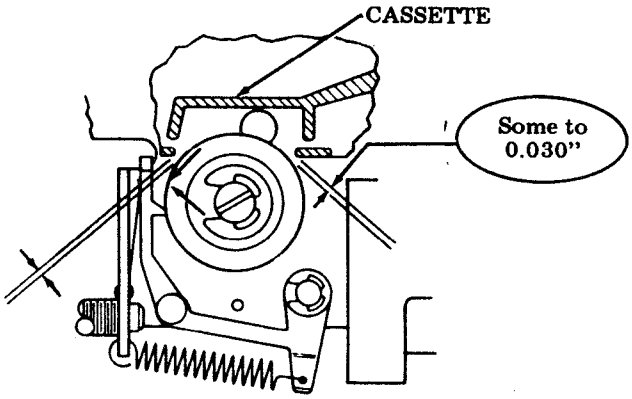

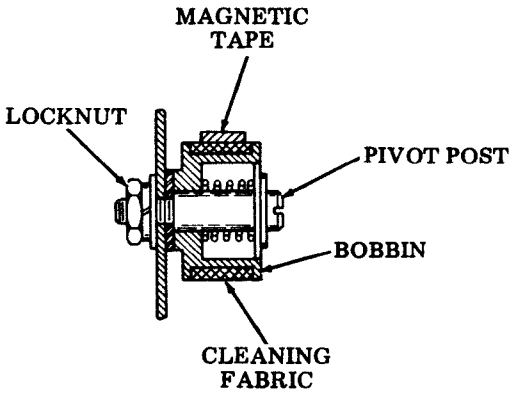

RUN LAMP MOUNTING

Requirement
The tip of the run lamp should be
Min Flush---Max 0.015 inch
underflush with the top surface of the latch bracket.

To Adjust
With the locknut loose, position the lamp. Tighten the locknut.

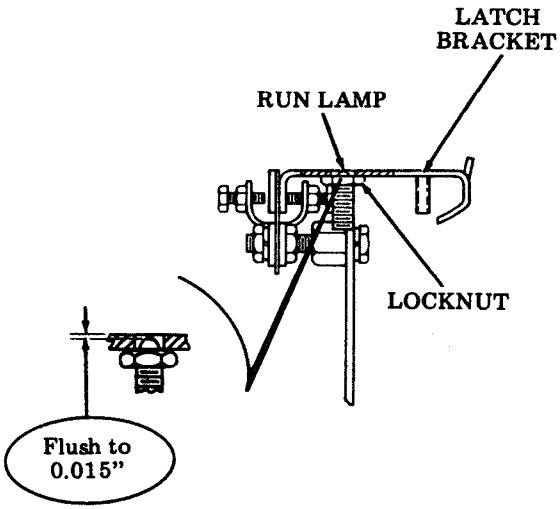

E. CASSETTE DRIVE (Contd)

3. CASSETTE HOLDER ADJUSTMENTS (Contd)

HEAD ADJUSTMENT

(1) Requirement
With the cassette holder biased rearward against the stop post, recording head assembly should rest on the locating posts and should be centered with equal clearance, as gauged by eye, between the locating posts.

(2) Requirement
The recording head assembly should not bind on the locating pins when cassette holder is pivoted outward. Check that the endplay between the cassette holder and pivot screws is taken up, first to the left and then to the right.

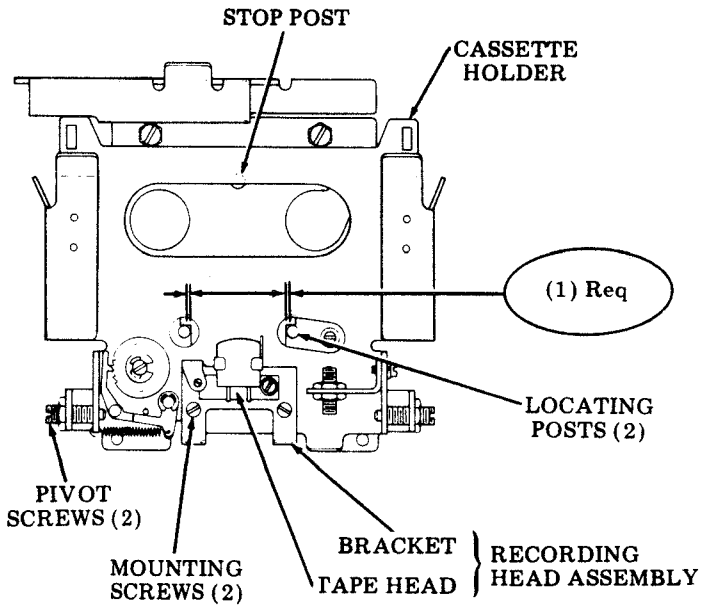

To Adjust
With the cassette holder biased rearward against the stop post and the mounting screws friction tight, slide recording head assembly against locating posts and the clearance on both sides should be equal. Tighten mounting screws.

PLATE WITH CASSETTE HOLDER

Requirement
With a standard cassette loaded in its latched position, the radial distance between the drive hub (less driving teeth) and the cassette case should be equal, as gauged by eye. Check requirement on both hubs.

To Adjust
With the mounting screws friction tight, position plate with stop to meet this requirement. Tighten mounting screws.

NOTE: The flat portion of the driving teeth of the drive hubs must drive the reel clockwise on the left (rewind) shaft and counterclockwise on the right (wind) shaft.

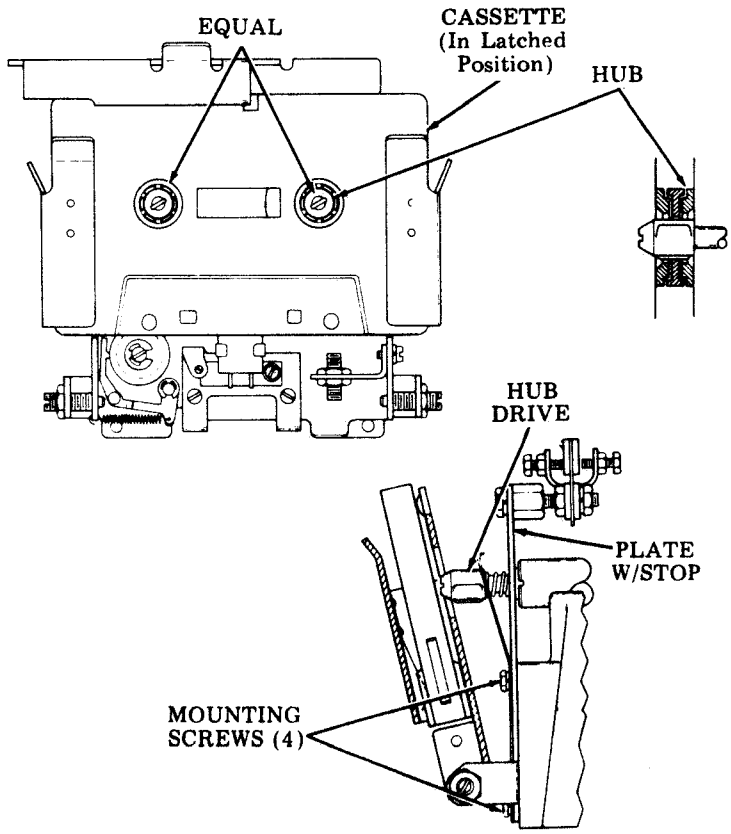

CASSETTE LATCH SPRING

Requirement
With a standard cassette in the latched position, it should take
Min 7 ounces---Max 10 ounces
to start spring moving from the installed length.

NOTE: If spring does not meet requirement, it should be replaced.

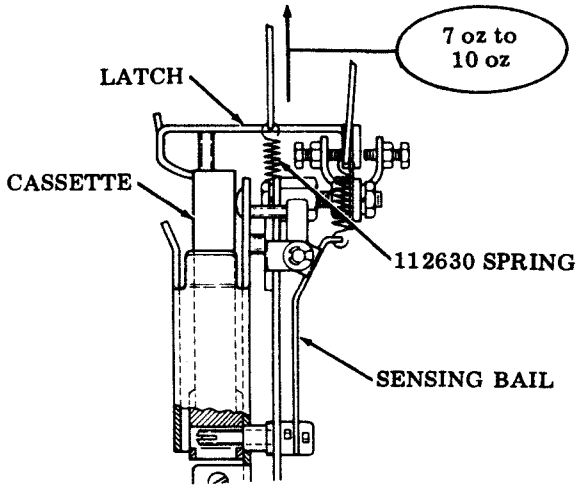

SENSING BAIL SPRING

Requirement
With a standard cassette in the latched position, it should take
Min 5 ounces---Max 8 ounces
to start spring moving from the installed length.

NOTE: If spring does not meet requirement, it should be replaced.

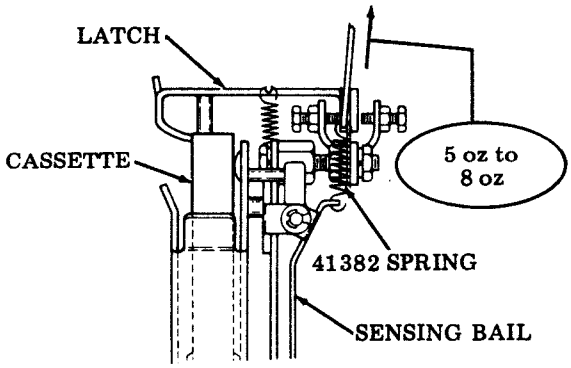

CASSETTE PRESSURE SPRING

Requirement
With an unloaded cassette holder, the clearance between the tip of the pressure spring and the cassette holder should be
Min 5/16 inch---Max 3/8 inch.

To Adjust
Bend spring to meet requirement.

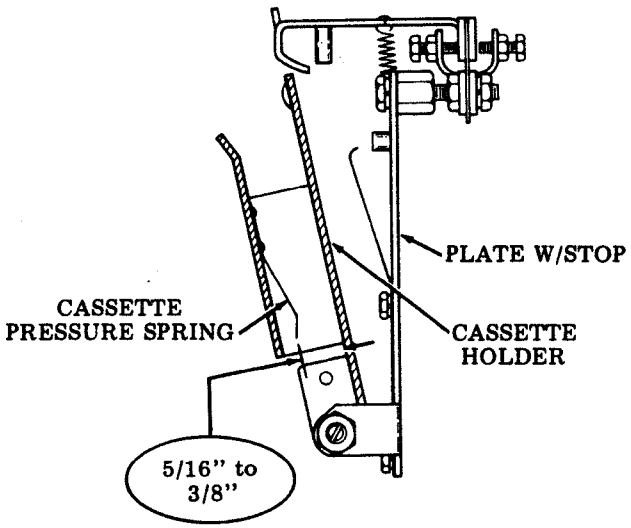

E. CASSETTE DRIVE (Contd)

3. CASSETTE HOLDER ADJUSTMENTS (Contd)

CASSETTE HOLDER PRESSURE SPRING

Requirement
With the cassette holder in the unlatched position, the distance between the outside edge of the upper form of the spring and the plate with stop should be
Min 5/16 inch---Max 3/8 inch.

To Adjust
Bend spring to meet this requirement.

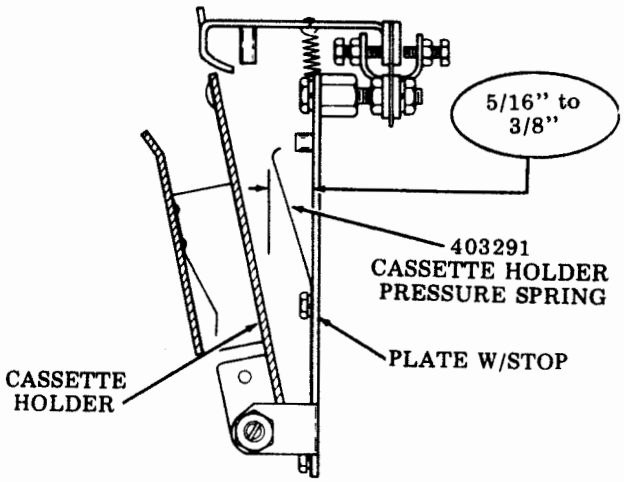

BOBBIN SPRING

Requirement
The bobbin spring should bias the bobbin shoulder against the washer.

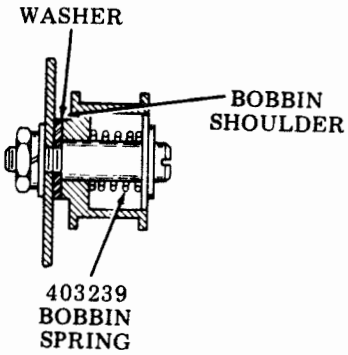

CASSETTE HOLDER STOP

Requirement
With cassette holder in unlatched (forward) position, rear side of head bracket should be in line with the tip of the NIB (as gauged by eye at cutout of head bracket).

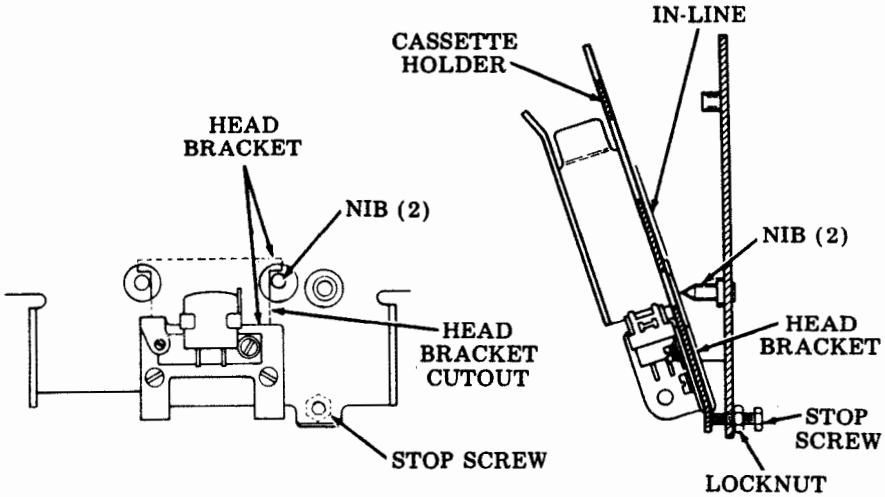

To Adjust
With locknut friction tight, adjust stop screw until requirement is met. Tighten locknut.

BOT-EOT LAMP MOUNTING

(1) Requirement
With cassette holder in its rearmost position (against stop post), tip of lamp should be
Min 3/16 inch---Max 5/16 inch
from bottom of sensing tube.

(2) Requirement
Lamp should be in line with hole in underside of sensing tube, as gauged by eye. Lamp should be aimed for peak photo-cell output. (A minimum of -200 millivolts.)

To Adjust
Loosen locknuts and mounting screw which secures lamp bracket to cassette holder. To meet requirement, adjust light source in the following sequence (to produce a minimum output of -200 millivolts between pins 4 and 10 (to 410764 circuit card).

(a) Vertical (up and down)
(b) Vertical Rotation
(c) Horizontal Position (within mounting hole)

Tighten locknuts and mounting screws.

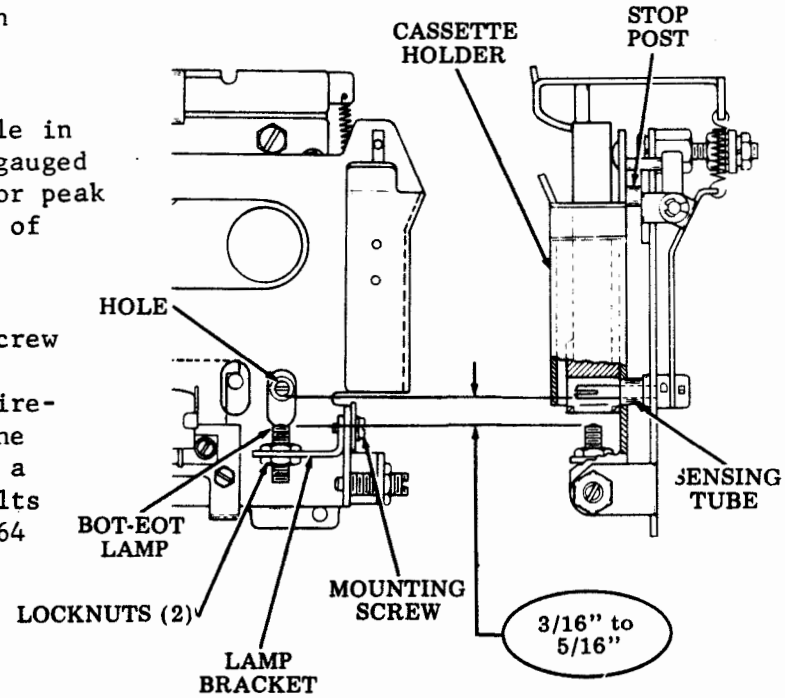

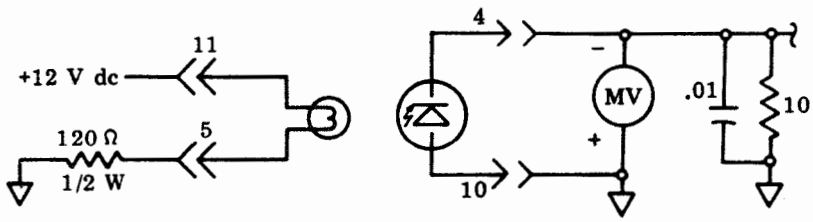

E. CASSETTE DRIVE (Contd)

3. CASSETTE HOLDER ADJUSTMENTS (Contd)

BOT-EOT SENSOR TUBE

Requirement
With the cassette in the latched position, the clearance between the sensing tube driver and the plate with stop should be
Min Some---Max 0.015 inch
at the point of least clearance when the sensing tube is biased lightly to the rear to take up play.

To Adjust
Bend sensing bail as required to meet requirement.

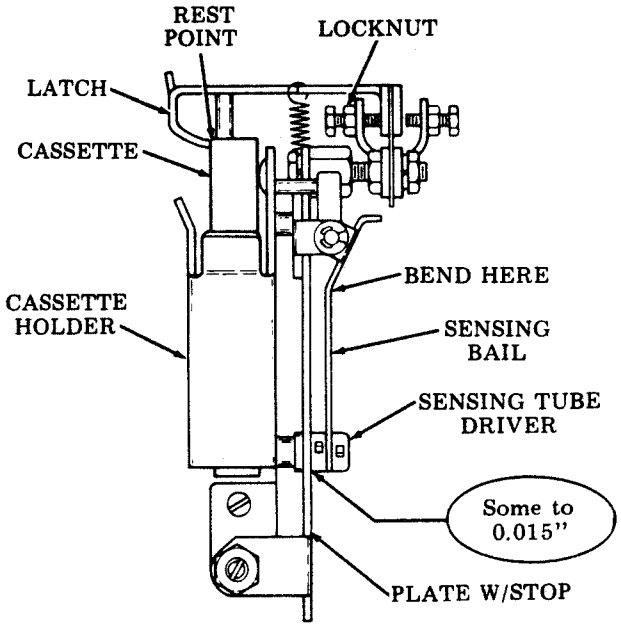

CASSETTE DOWNSTOP

Requirement
With a cassette latched in place, the clearance between the cassette and the top of the washer should be
Min 0.005 inch---Max 0.020 inch
on both sides.

To Adjust
With mounting screw friction tight, move washer up or down to meet requirement. Tighten mounting screw.

NOTE: The downstop washer on the right side should be adjusted in conjunction with the BOT-EOT LAMP MOUNTING adjustment.

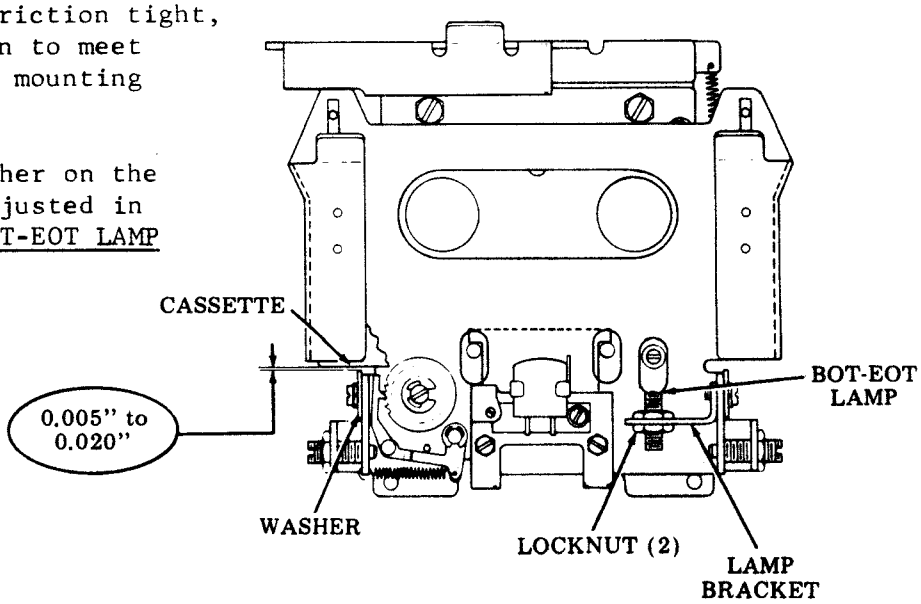

STEPPER SPRING

Requirement
With the cassette removed, it should take
Min 2-1/2 ounces---Max 3-1/2 ounces
to start spring moving at the installed length.

NOTE: If spring does not meet requirement, it should be replaced.

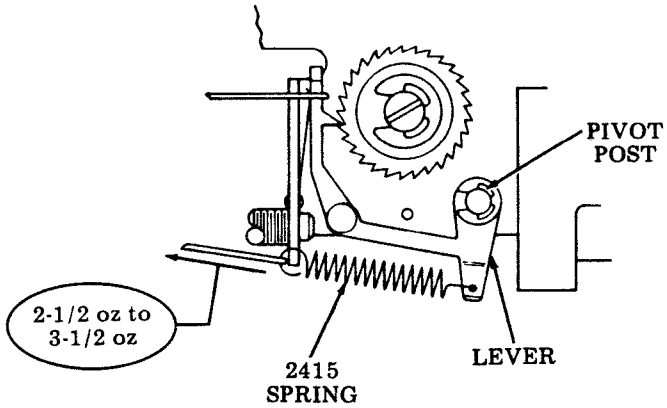

DRIVE HUB SPRING -- FORWARD (Right)

Requirement
The drive hub should contact the special screw. It should require
Max 3-1/2 ounces
to start drive hub moving rearward.

NOTE: It may be necessary to remove the special screw to check this requirement, however, the check is made with the drive hub at the normal rest position. If spring does not meet requirement, replace spring.

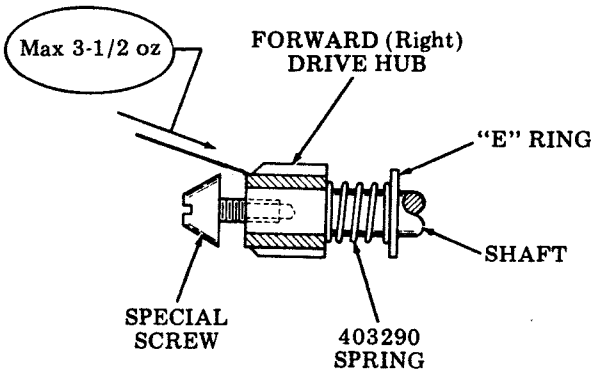

DRIVE HUB YIELD SPRING -- REVERSE (Left)

(1) Requirement
Restrain the shaft from turning; it should require
Min 3-1/2 ounces---Max 5 ounces
applied to the outer edge of the drive hub to start the hub moving counter-clockwise.

(2) Requirement
When the drive hub is moved all the way to the rear and let snap forward, the drive hub should contact the special screw.

NOTE: If the spring does not meet the requirement, replace spring.

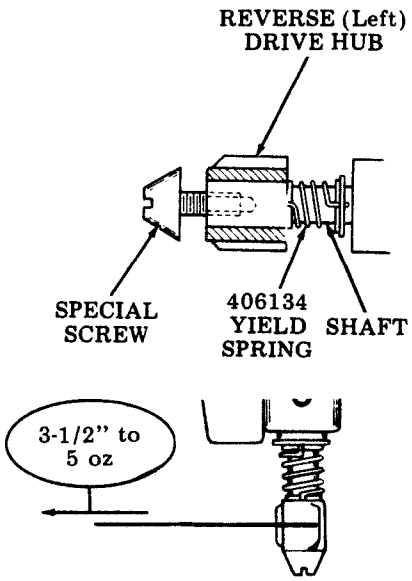

E. CASSETTE DRIVE (Contd)

4. DRIVE MECHANISM ADJUSTMENTS

PULLEY AND SHAFT ENDPLAY

Requirement
There should be
Min Some---Max 0.002 inch
perceptible endplay, as gauged by eye, on each shaft.

To Adjust
(a) Position each armature on its shaft with two set screws loosened.
(b) Insert a 0.002 inch gauge between friction washer and armature.
(c) Apply enough rearward pressure on the drive hubs to force the steel washer against the nylon bushing and overcome any play between the "E" ring and the shaft "E" ring groove.
(d) Tighten (very securely, both set screws for each assembly).

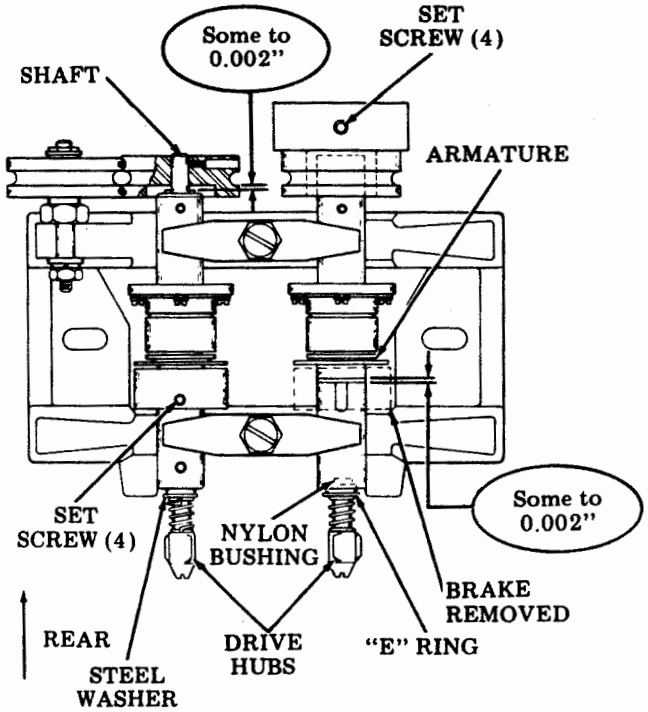

PULLEY ALIGNMENT

Requirement
With lubrication holes upward, the front face of all three pulleys should be in line within
Max 0.020 inch
as gauged against a straight edge.
(Bias idler pulley toward rear.)

To Adjust
With the rear clamp screw friction tight and the "O" ring removed, adjust the shafts with pulleys until the requirement is met. Tighten clamp screw.

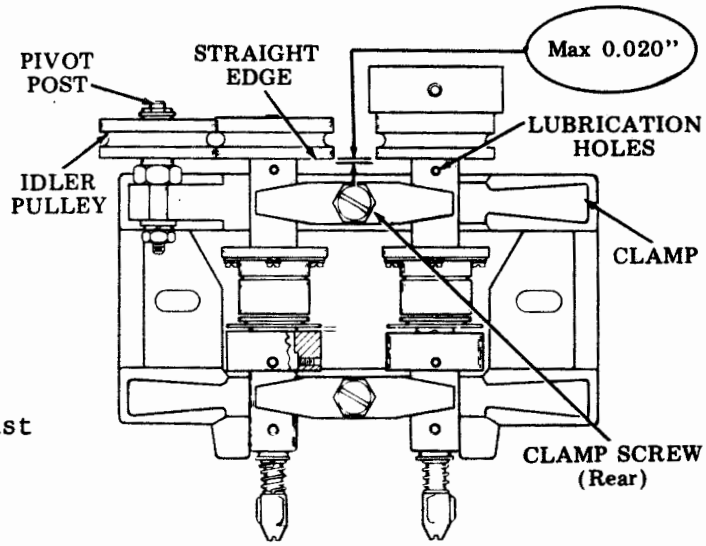

BELT ("O" RING)

Requirement
The gap in the reversing belt should be
Min 0.050 inch---Max 0.100 inch.

To Adjust
With the idler pulley shaft friction tight, adjust up or down until the requirement is met. Tighten shaft nut.

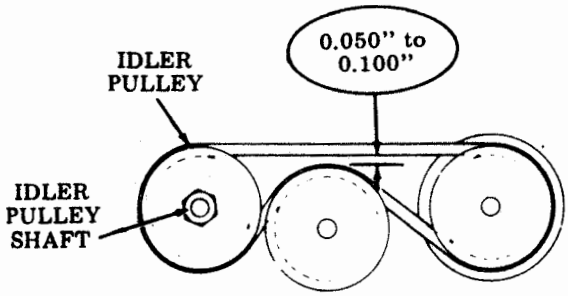

CLUTH

Requirement

With lubrication holes upward and each shaft biased toward the center, the air gap between the rotor and armature of each clutch should, at the point of least clearance, be

Min 0.009 inch---Max 0.016 inch.

To Adjust

With the front clamp screw friction tight, and the 406131 0.012 inch gauge between the rotor and armature, slide front housing rearward until the requirement is met. Tighten clamp screw.

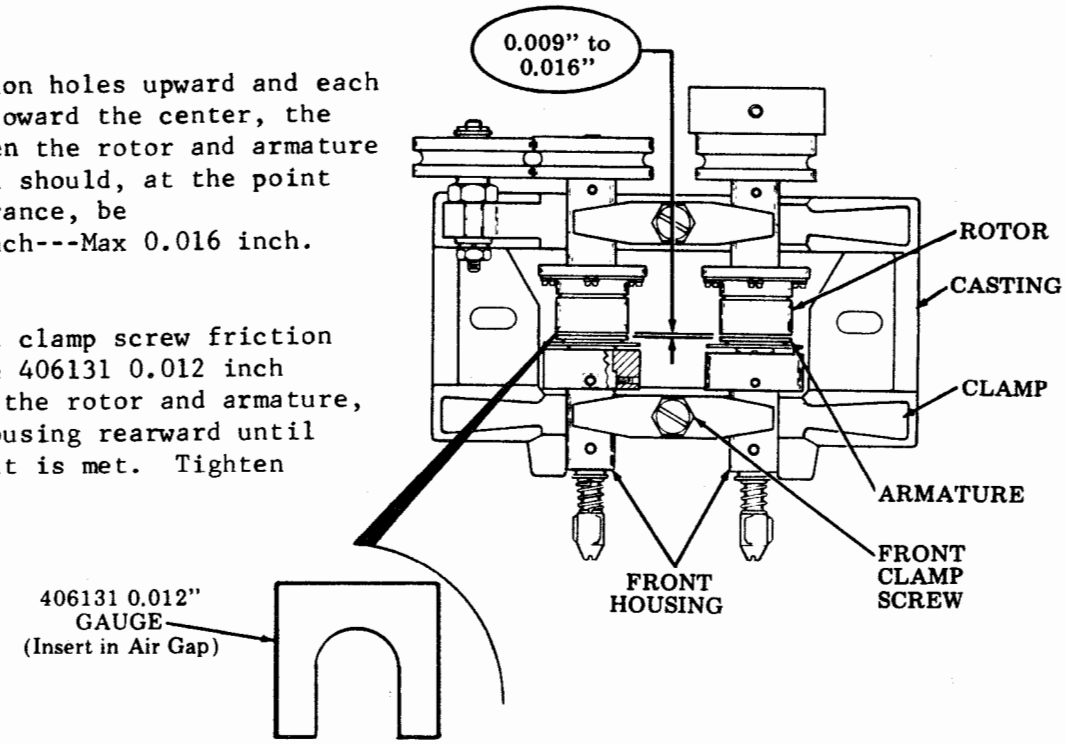

BRAKE

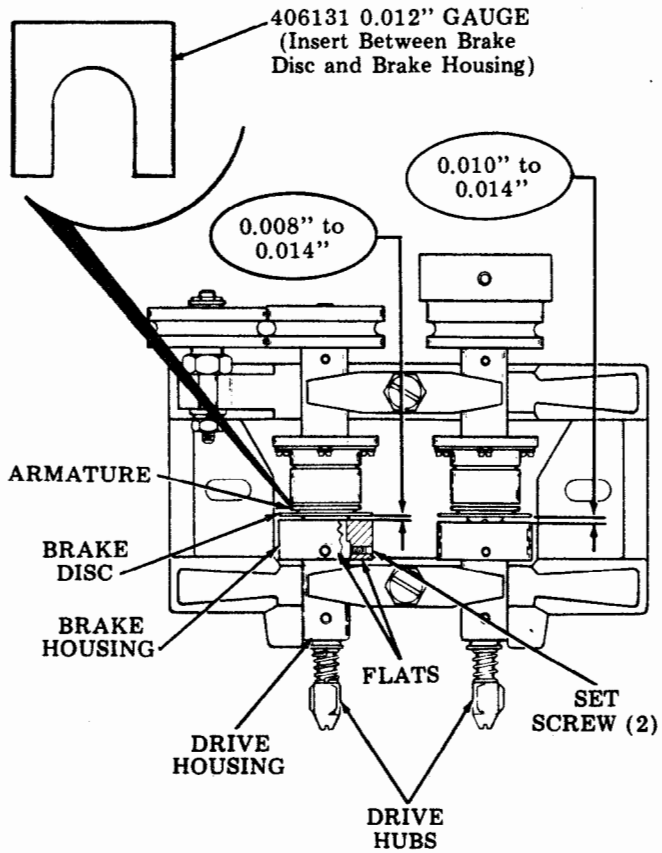

Requirement

With the armature biased toward the front (by means of pulling slightly on the drive hub), the air gap between the brake disc and the brake housing should, at the point of least clearance, be

Min 0.010 inch---Max 0.014 inch (Forward Brake)

Min 0.008 inch---Max 0.014 inch (Reverse Brake)

To Adjust

Loosen the two sets screws. Insert the 406131 0.012 inch gauge between the brake disc and the brake housing. With the set screws over the mounting flats on the drive housing, slightly tighten the right set screw until friction tight. Adjust brake coil housing until the requirement is met. Tighten two set screws.

E. CASSETTE DRIVE (Contd)

4. DRIVE MECHANISM ADJUSTMENTS (Contd)

MOTOR PULLEY

Requirement
The flat belt should be approximately centered on both the motor drive pulley and driven pulley.

To Adjust
With the set screw loose, position the drive pulley to meet the requirement.

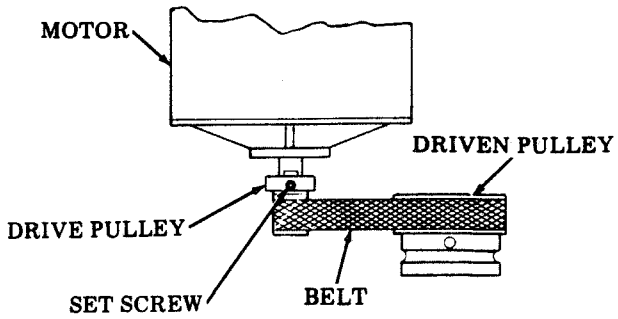

MOTOR DRIVE BELT

(1) Requirement
With a force of 8 ounces applied perpendicular to the drive belt, approximately midway along its free length, the belt should deflect
Min 1/16 inch---Max 1/8 inch
from a line tangent to both pulleys.

(2) Requirement
While the belt is motor driven (motor on), the belt should maintain its center position on the large pulley and should not walk to the edge of the pulley.

To Adjust
With the casting mounting screws friction tight, move casting, left or right with a slight pivot, to meet the requirements.

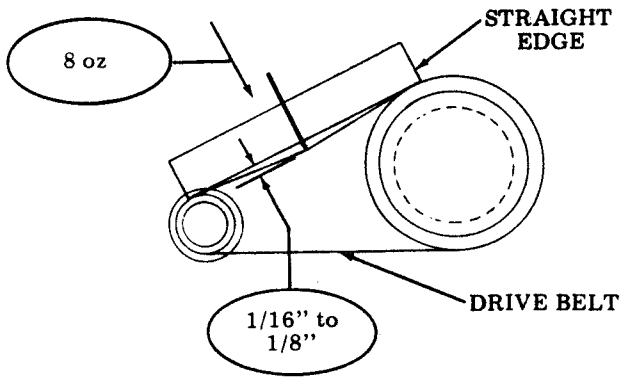

BASE PLATE HEIGHT (Early Design Only - See Note)

(1) Requirement
The five posts and adjusting screws should support and maintain a level balance of the unit when removed from the cover base.

(2) Requirement
The distance between the tops of the adjusting screws and base plate should be
Min 1-1/16 inch---Max 1-3/32 inch.

(3) Requirement (40CD101 Only)
With the unit resting on a level surface, the clearance between the surface and the SSI interface mounting bracket should be
Min Some.

To Adjust
With the locknuts friction tight, adjust the four corner posts to meet the requirement. Tighten locknuts. With the aid of a flat surface, adjust the center post until the tip of the adjusting screw is parallel to the four outer posts. Tighten locknut.

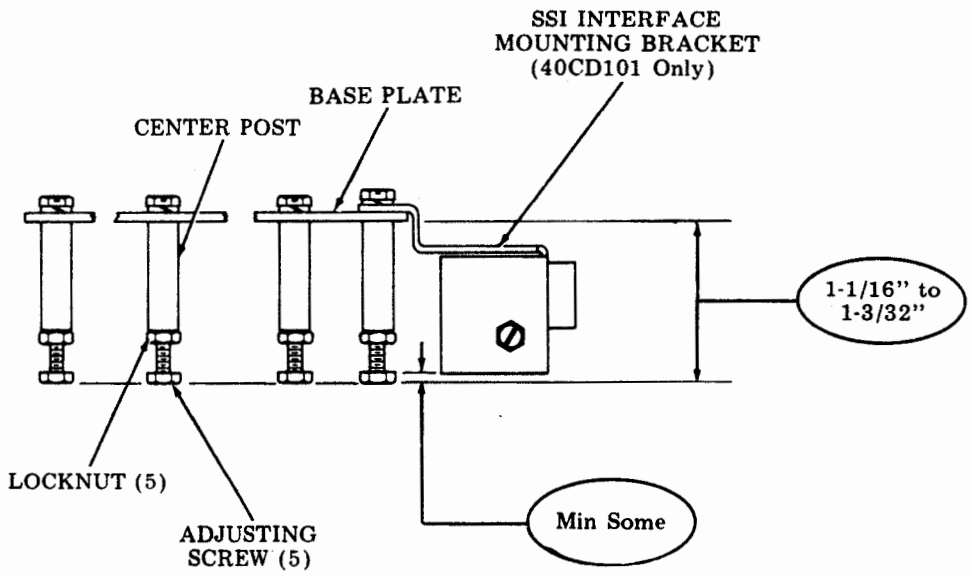

NOTE: Early design 40CD101 and 40CD102 were supplied with five posts and five adjusting screws. Later design units are supplied with screws replacing the posts and adjusting screws and do not require adjusting.

E. CASSETTE DRIVE (Contd)

5. 410764 CIRCUIT CARD ADJUSTMENT

OPEN LINE FREQUENCY

Requirement

The open line frequency of the 405681 TCI chip must be 50 kilohertz ±1 kilohertz. The adjustment must be accurate to within ±.4 microseconds.

To Adjust

With dc power applied to the 410764 circuit card and the SSI signal line disconnected, adjust R22 to meet the above requirement.

NOTE 1: To adjust variable resistor (R22), connect oscilloscope common to board common (negative end of C1) and oscilloscope probe to the phase 1 clock output (either end of R13).

Set the scope:
X10 probe to 0.5 V per division
2 microseconds per division
Center the trace
Adjust R22 to obtain one complete cycle in 10 divisions.

NOTE 2: With the exception of this adjustment on the 410764 circuit card assembly, all other adjustments are related to the mechanical portion of the 40CD101.

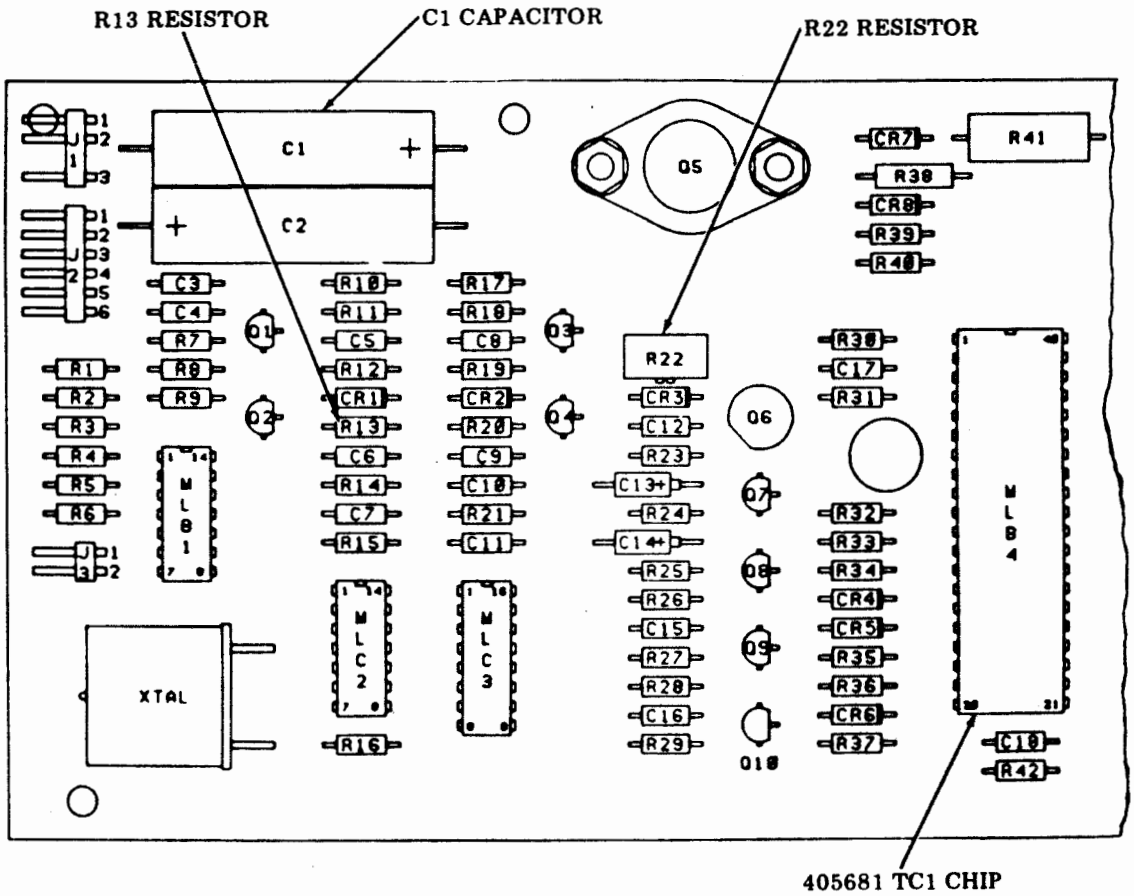

PART 6 -- COMPONENT ACCESS

INDEX PAGE

A. TEST SWITCHES AND INDICATORS 6-2

B. DISPLAY MONITOR
1. REMOVAL 6-3
2. DISASSEMBLY INFORMATION 6-4
3. SUBASSEMBLY IDENTIFICATION. 6-4
4. DISASSEMBLY/REASSEMBLY. 6-6

C. OPCONS
1. GENERAL 6-32
2. REMOVAL 6-32
3. REPLACEMENT 6-33
4. SUBASSEMBLY IDENTIFICATION. 6-33
5. CONVERSIONS 6-34
6. KEYTOP AND KEYSWITCH IDENTIFICATION 6-35
7. DISASSEMBLY/REASSEMBLY. 6-36

D. TRACTOR FEED PRINTER
1. REMOVAL AND REPLACEMENT OF ENTIRE PRINTER ASSEMBLY. 6-40
2. SUBASSEMBLY IDENTIFICATION. 6-41
3. DISASSEMBLY/REASSEMBLY. 6-42

E. FRICTION FEED PRINTER
1. REMOVAL AND REPLACEMENT OF ENTIRE PRINTER ASSEMBLY. 6-50
2. SUBASSEMBLY IDENTIFICATION. 6-51
3. DISASSEMBLY/REASSEMBLY. 6-52

F. CONTROLLER -- 40C437
1. REMOVAL AND REPLACEMENT 6-65
2. DISASSEMBLY/REASSEMBLY. 6-69

G. CASSETTE DRIVE
1. CASSETTE DRIVE REMOVAL AND REPLACEMENT--RACK MOUNT. 6-70
2. REMOVAL AND REPLACEMENT OF UPPER CABINET ASSEMBLY 6-70
3. SUBASSEMBLY IDENTIFICATION. 6-72
4. DISASSEMBLY/REASSEMBLY DRIVE. 6-72
5. DISASSEMBLY/REASSEMBLY SSI/AC INTERFACE 6-77

H. CABINETS
1. REMOVAL -- 40CAB352/RC OR 40CAB354/RB CABINET PARTS 6-82
2. REMOVAL -- 40CAB202/RC CABINET PARTS. 6-84

I. PEDESTAL
1. DISASSEMBLY 6-85
2. REMOVAL AND REPLACEMENT 6-86

J. INTERFACE REMOVAL AND REPLACEMENT -- RACK MOUNT 6-88

K. POWER SUPPLY
DISASSEMBLY/REASSEMBLY. 6-89

A. TEST SWITCHES AND INDICATORS

NOTE: The operation of test switches and use of indicators should be done under the direction of PART 4 -- TROUBLESHOOTING of this manual.

Tractor Feed Printer

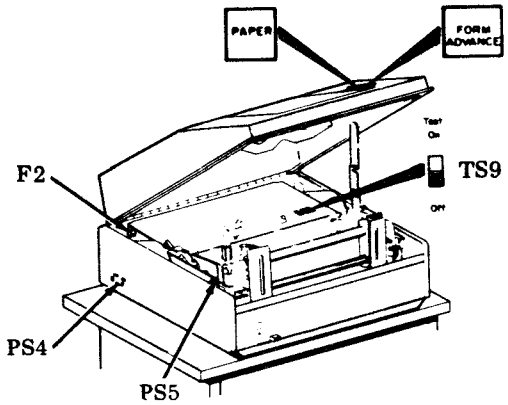

Friction Feed Printer

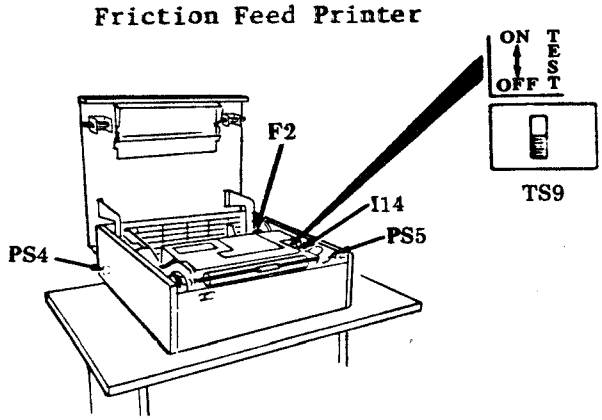

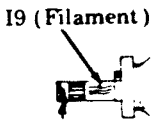

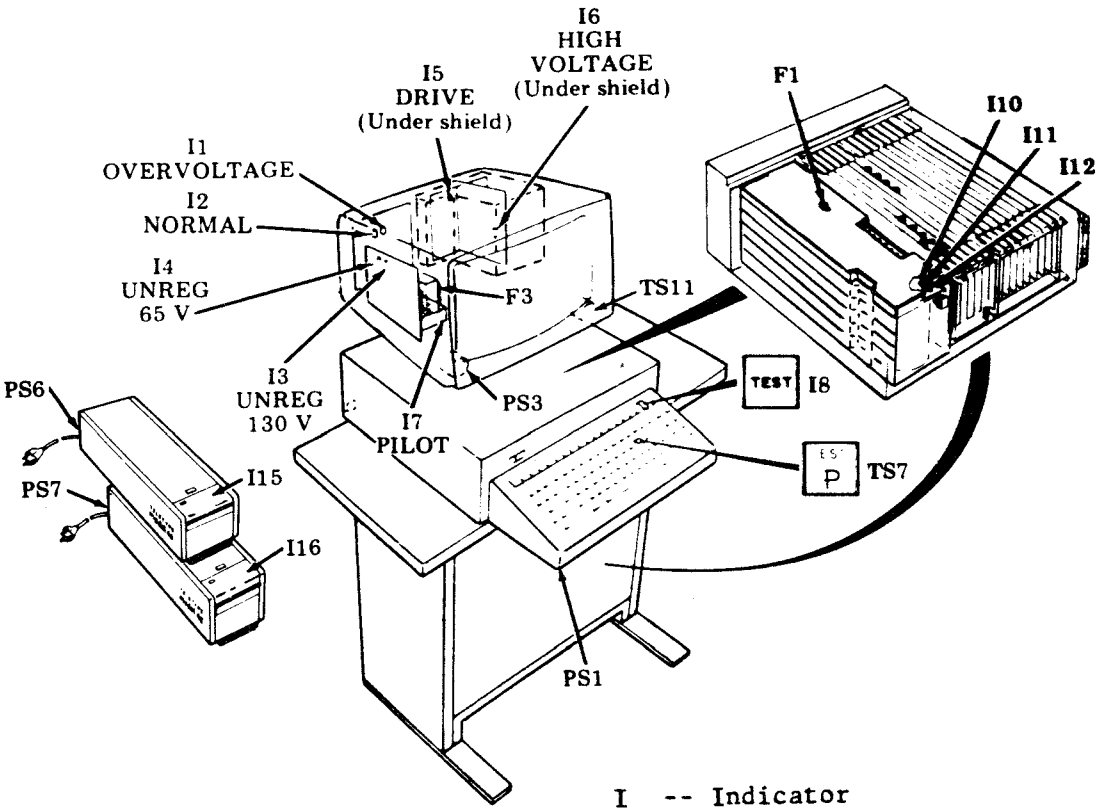

I -- Indicator
TS -- Test Switch
F -- Fuses and Circuit Breaker
PS -- Power or Interlock Switch

B. DISPLAY MONITOR

CAUTION: REMOVE ALL POWER FROM THE SET BEFORE PERFORMING ANY COMPONENT REPLACEMENT OR CONVERSIONS. THIS DOES NOT APPLY TO COVER REMOVAL FOR ACCESS TO TEST SWITCHES, OR TO POWER ON ADJUSTMENTS OF THE MONITOR.

1. REMOVAL

(1) Removal of entire monitor unit from set:
Grasp monitor by sides near supports and simply lift up. Electrical cable connectors are part of support assembly.

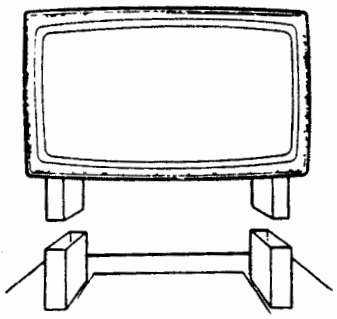

(2) Removal of monitor housing:
Disconnect the fan cable and ground strap and route cable out of cover through opening in rear of the shroud assembly.

WEAR SAFETY GLASSES

(3) Disengage latch. New cover latch has rectangular hole to accept a tool (small screwdriver) to unlatch display cover.

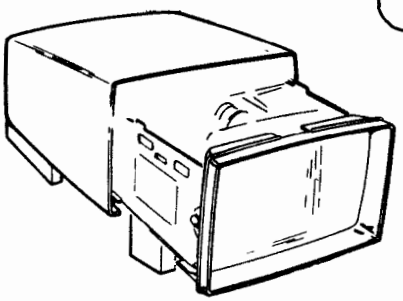

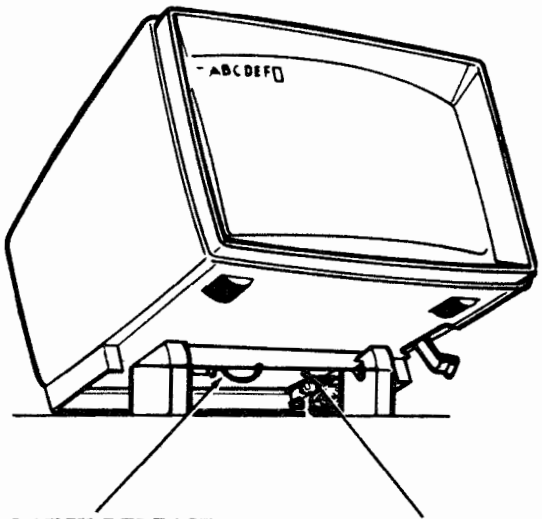

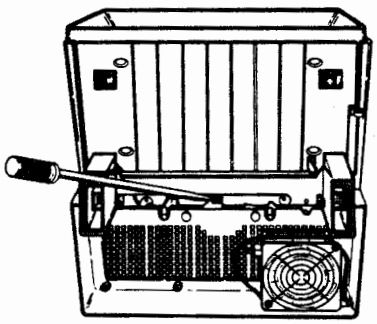

(Bottom View)

New cover latch has rectangular hole to accept a tool (small screwdriver) to unlatch monitor cover.

B. DISPLAY MONITOR (Contd)

2. DISASSEMBLY INFORMATION

When removing a subassembly or part from the display monitor, follow the removal procedure and note the sequence of removal to enable proper reassembly. For reassembly, reverse the removal procedure except where different instructions are given.

For all disassembly or reassembly procedures or when disconnecting or reconnecting any of the electrical components of the display monitor, all power and video signals to the monitor should be turned OFF to avoid safety hazards and prevent electrical component damage. A recommended safety practice is to unplug all ac input power cords.

DANGER: WEAR APPROVED SAFETY GLASSES WHEN THE MONITOR HOUSING IS REMOVED, AS THE DISPLAY TUBE IS FRAGILE IN THE NECK AREA AND IS SUBJECT TO IMPLOSION IF BROKEN. BE CAREFUL NOT TO STRIKE THE TUBE WITH TOOLS OR COMPONENTS WHEN WORKING IN ITS VICINITY.

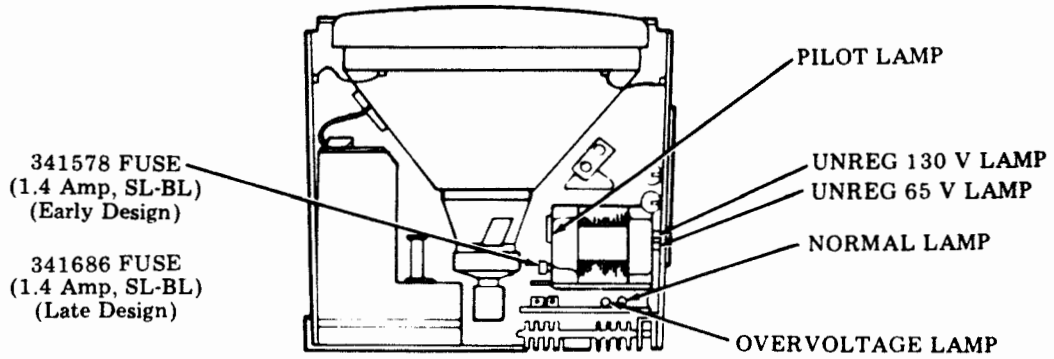

3. SUBASSEMBLY IDENTIFICATION

NOTE 1: When ordering replaceable parts or components, unless otherwise specified, prefix each part number with the letters "TP" (ie, TP410055).

NOTE 2: The number indicated in parenthesis after each assembly designates the page covering the disassembly/reassembly procedures.

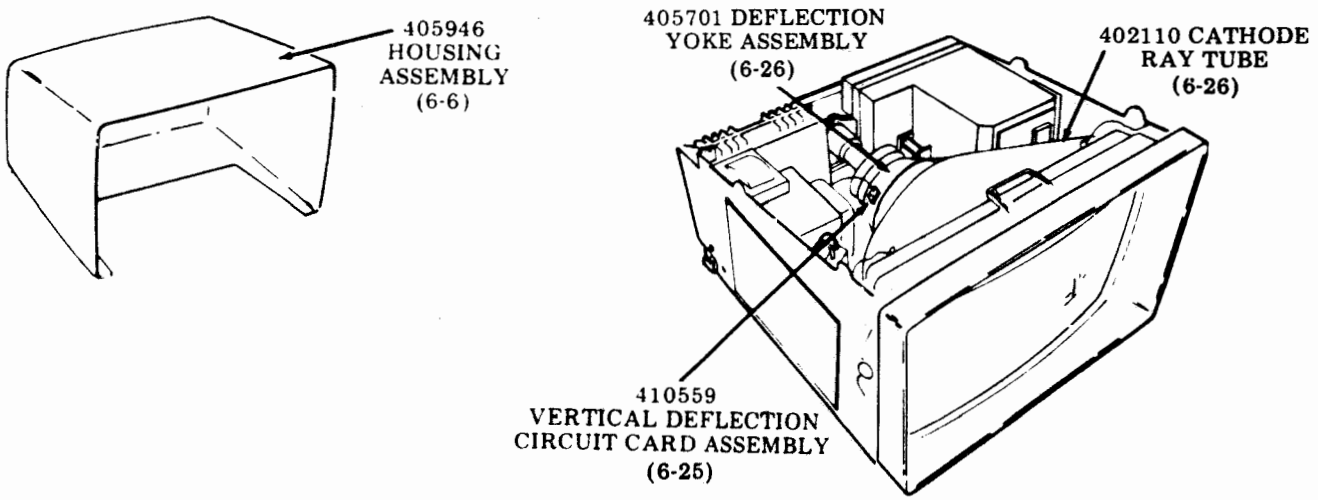

NOTE: The number indicated in parentheses after each assembly designates the page covering the disassembly/reassembly procedures.

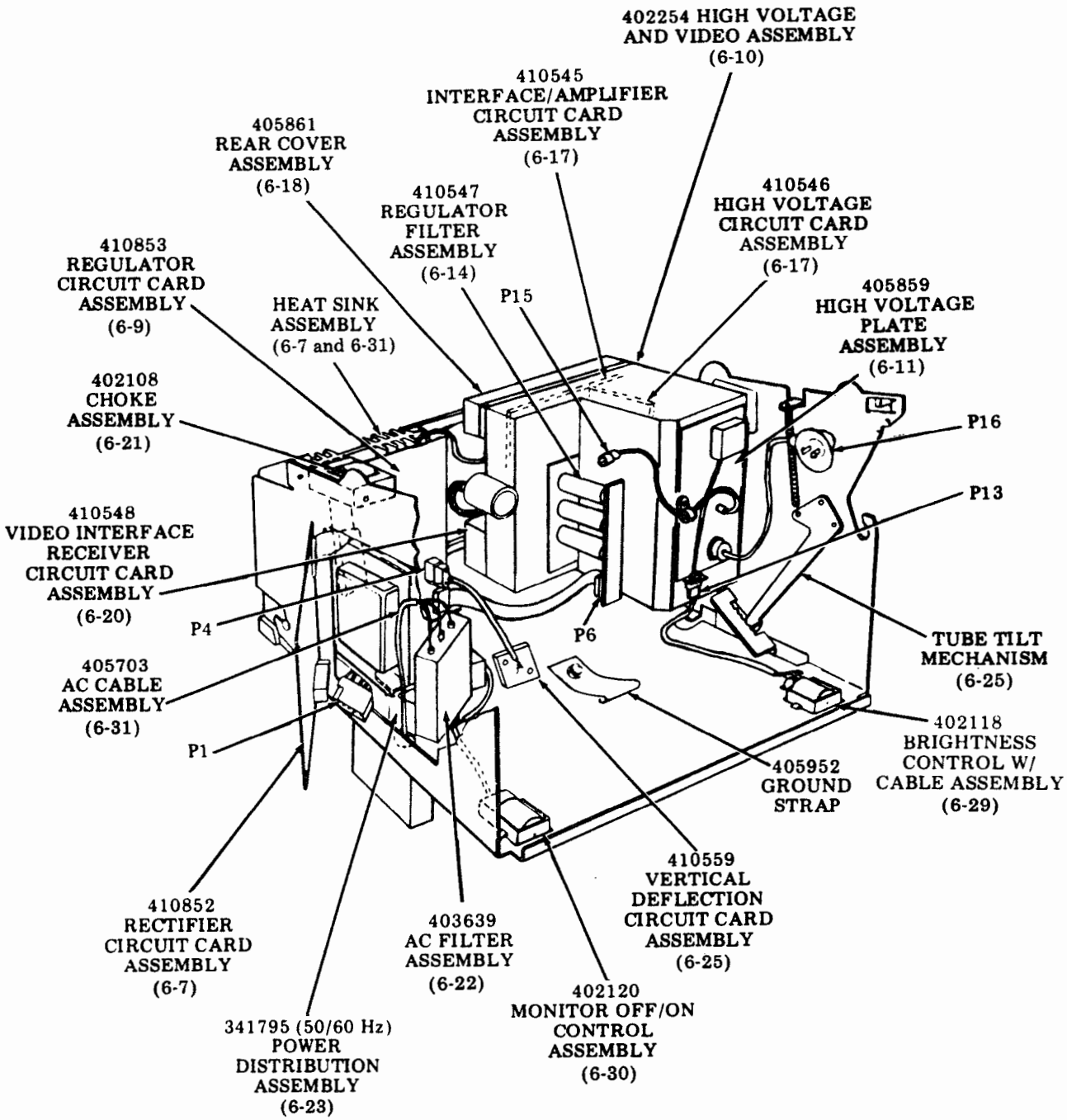

B. DISPLAY MONITOR (Contd)

4. DISASSEMBLY/REASSEMBLY

405946 Housing Assembly

(1) Disconnect the fan cable and ground strap and route cable out of cover through opening in rear of the shroud assembly.

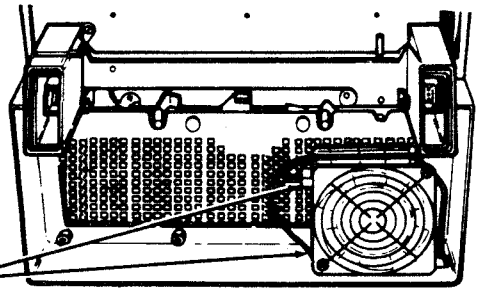

Tilt release -- Prevents monitor from tilting back when housing is removed.

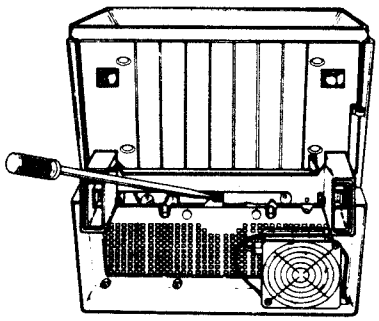

(Bottom View)
(Late Design)

(2) Disengage latch. New cover latch has rectangular hole to accept a tool (small screw-driver) to unlatch display cover.

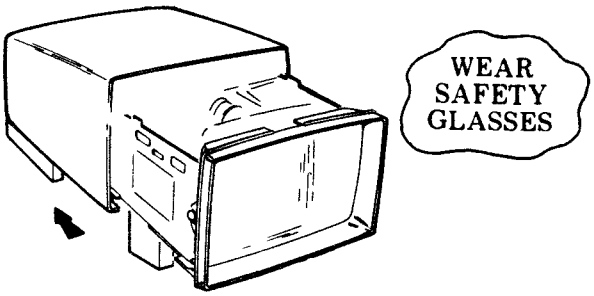

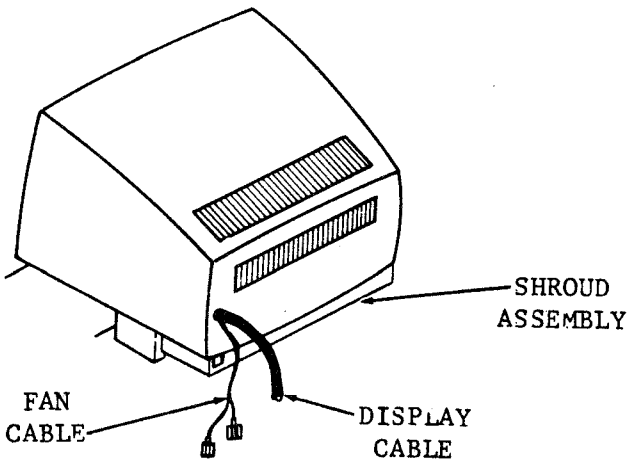

(3) Slide the cover rearward along Display and fan cable 4 to 5 inches. Route fan cable through the opening in rear of the cover to the inside.

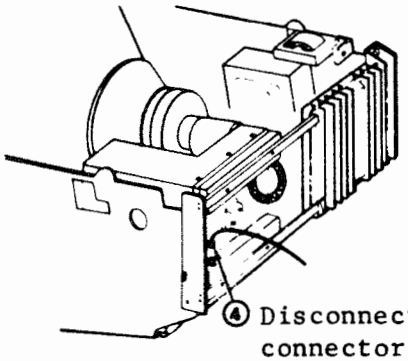

④ Disconnect P901 video cable connector to enable removal of housing. Remove housing with shroud assembly completely.

Heat Sink to Lowered Position

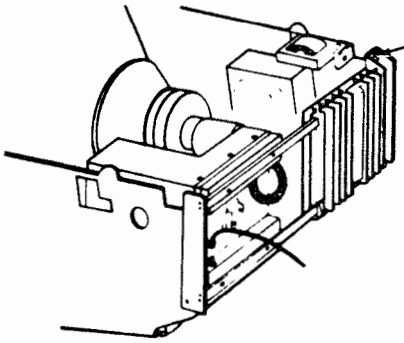

① Rotate slotted fastener head 1/4-turn counterclockwise.

② Lower.

410852 Rectifier Circuit Card Assembly

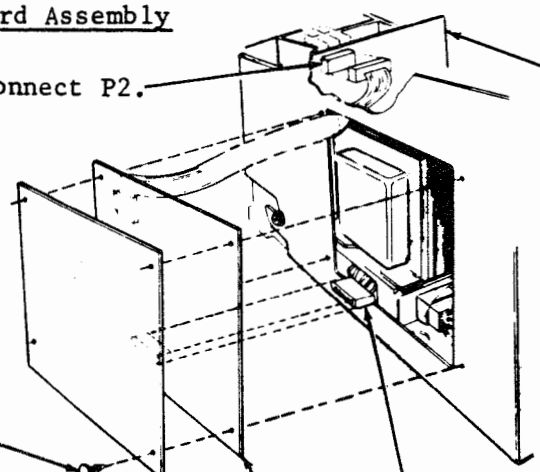

① Disconnect P2.

410853 CIRCUIT CARD

② Pry 341546 fasteners loose from four corners (part of 410852).

(Left Side View)

INSULATOR (Part of 410852)

③ Disconnect P1.

410852 CIRCUIT CARD

B. DISPLAY MONITOR (Contd)

4. DISASSEMBLY/REASSEMBLY

408980 Fan Assembly

(1) Remove monitor and place on end for access to shroud assembly with fan.

(2) Remove the six self-threading screws and flatwashers that hold the shroud assembly to the cover. Remove the shroud assembly from the cover assembly.

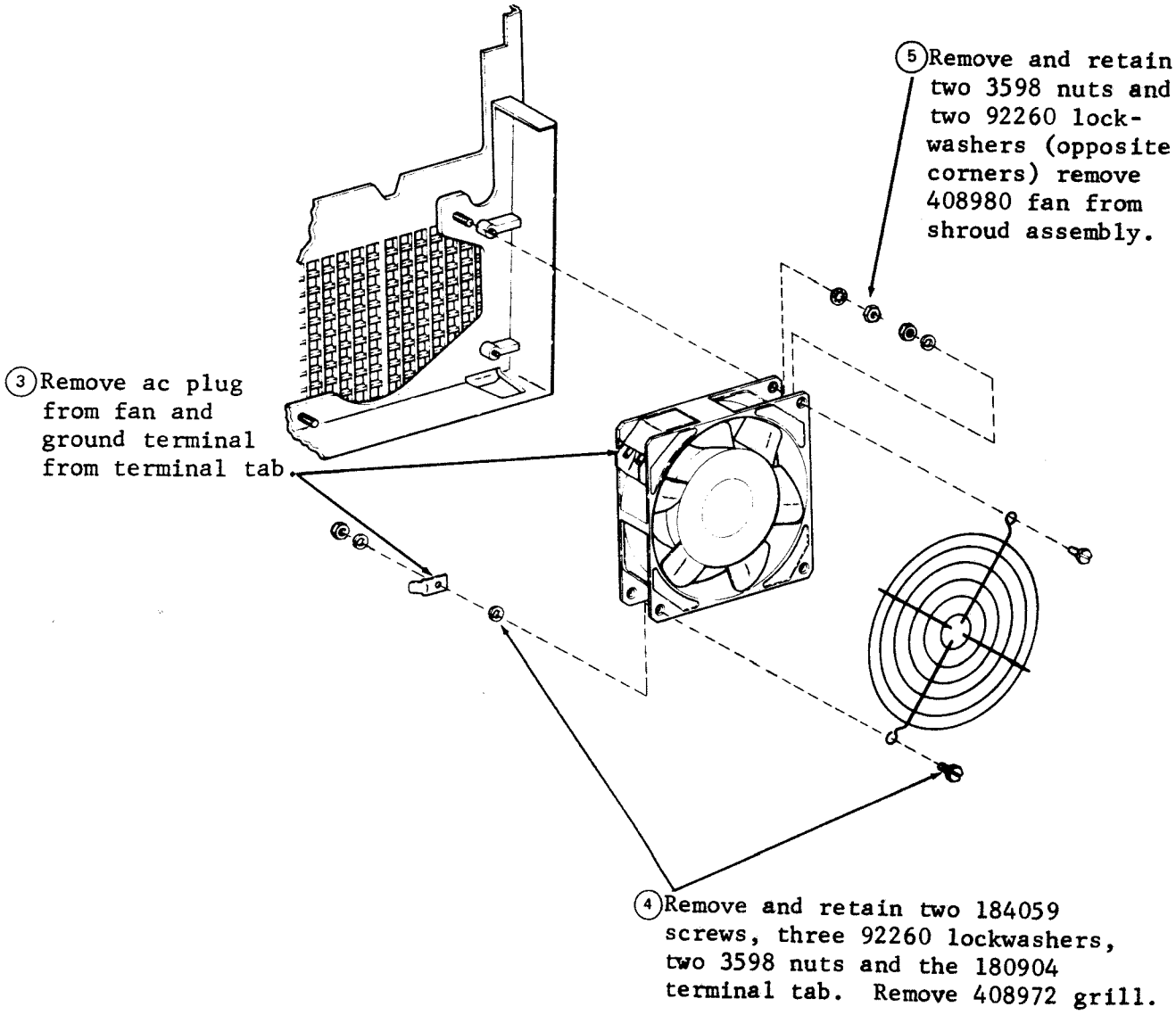

410853 Regulator Circuit Card Assembly

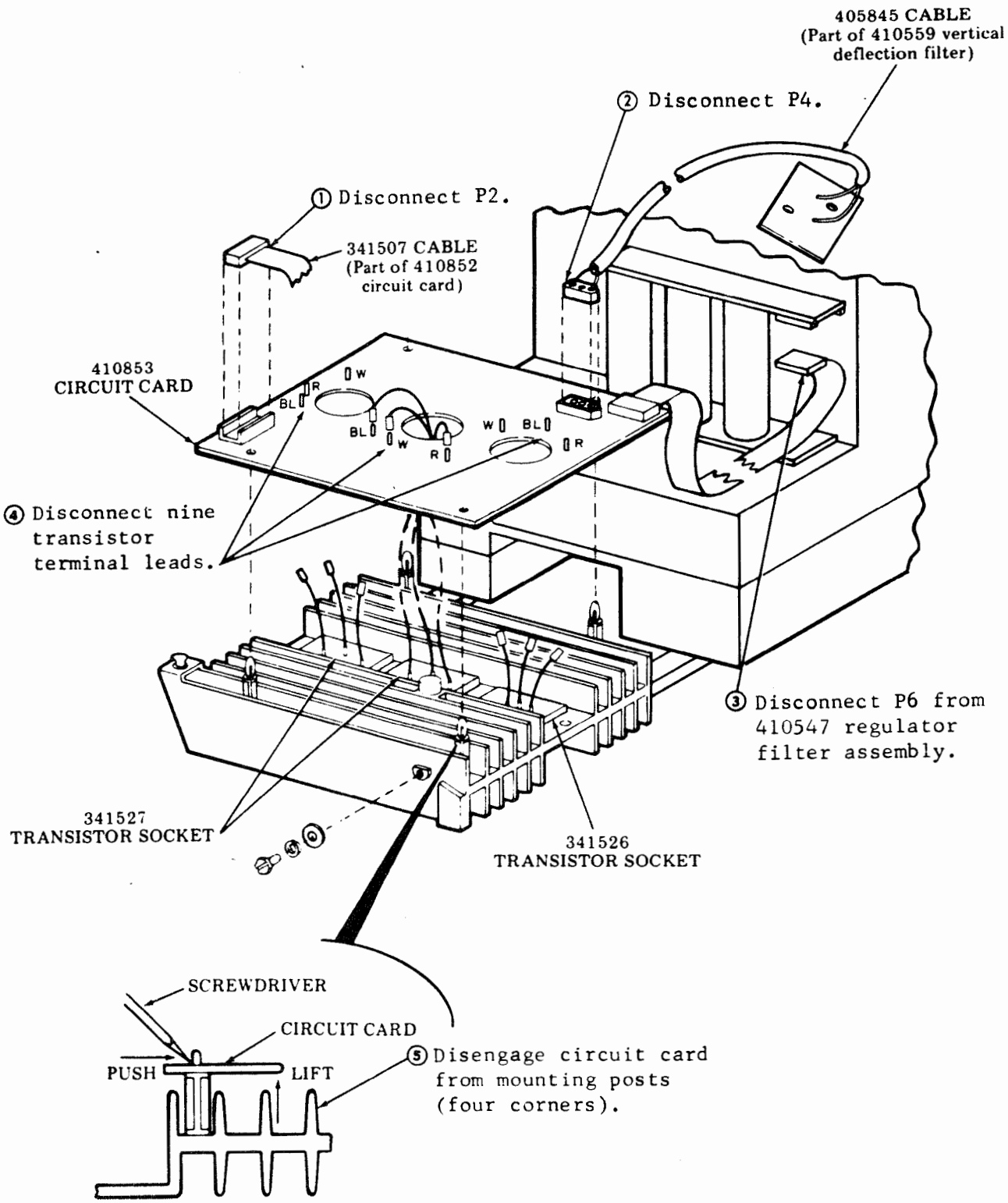

B. DISPLAY MONITOR (Contd)

4. DISASSEMBLY/REASSEMBLY (Contd)

402254 High Voltage and Video Assembly

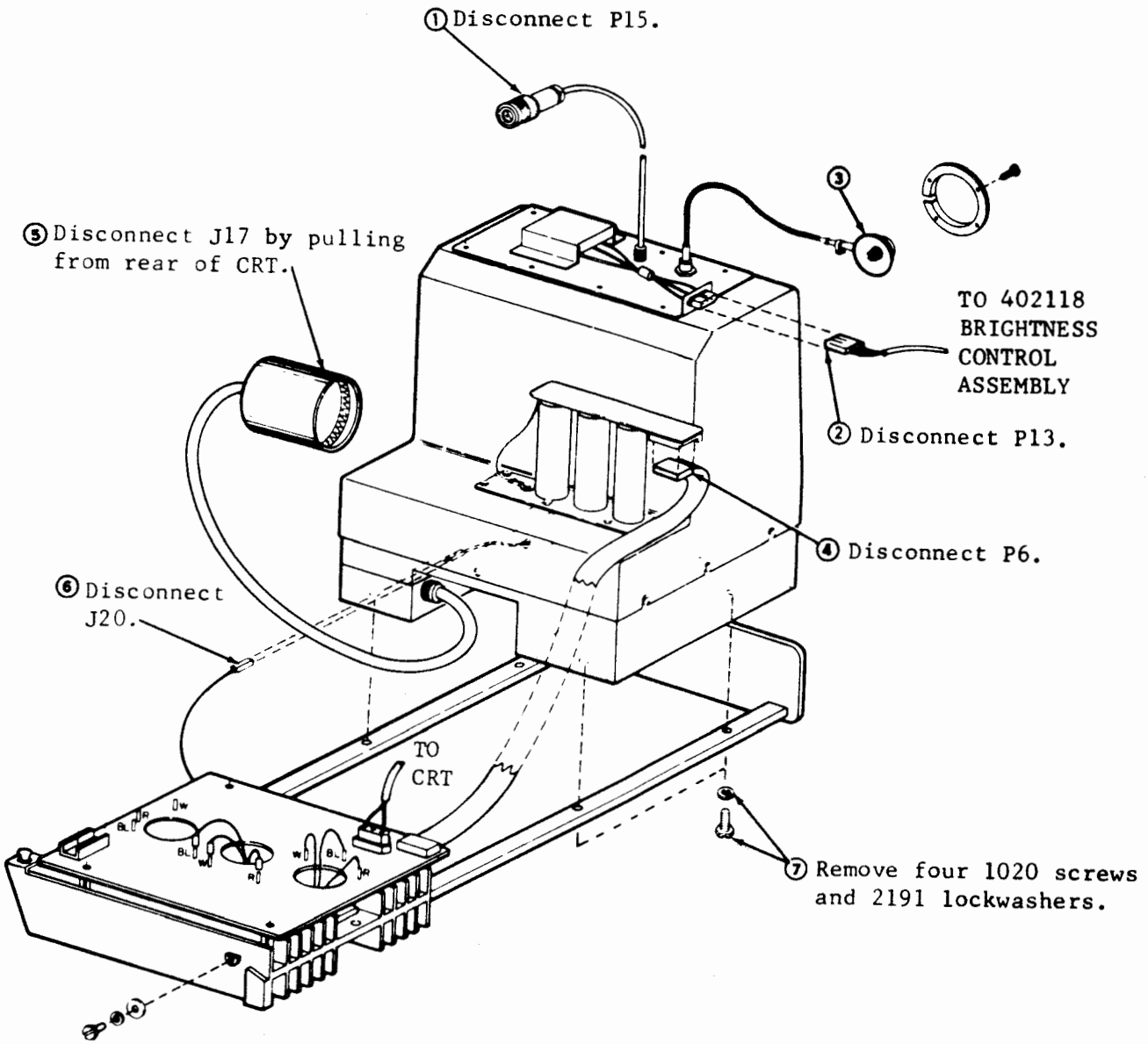

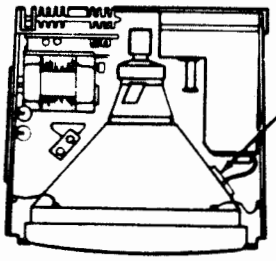

③ Disconnect high voltage lead from side of CRT by removing five 152893 screws, 110743 lockwashers and 125011 flat washers. Remove cover and pull connector from socket in CRT.

405859 High Voltage Plate Assembly

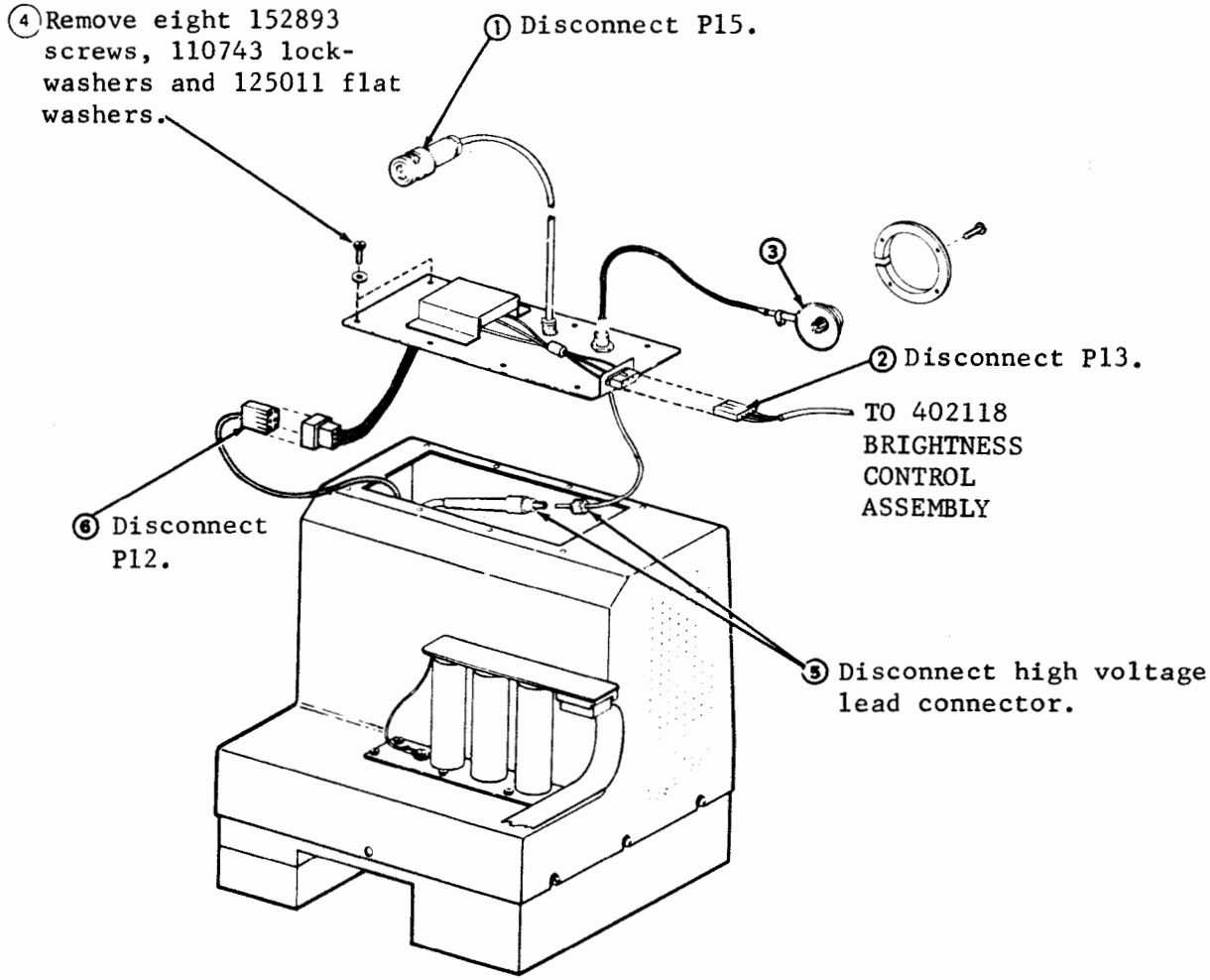

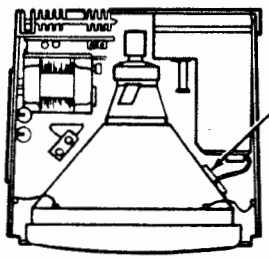

③ Disconnect high voltage lead from side of CRT by removing five 152893 screws, 110743 lockwashers and 125011 flat washers. Remove cover and pull connector from socket in CRT.

NOTE: DURING REASSEMBLY OF 405859 HIGH VOLTAGE PLATE ASSEMBLY, THE REQUIREMENTS SPECIFIED ON THE FOLLOWING PAGES SHOULD BE CHECKED AND MET TO INSURE PROPER OPERATION OF THE MONITOR.

B. DISPLAY MONITOR (Contd)

4. DISASSEMBLY/REASSEMBLY (Contd)

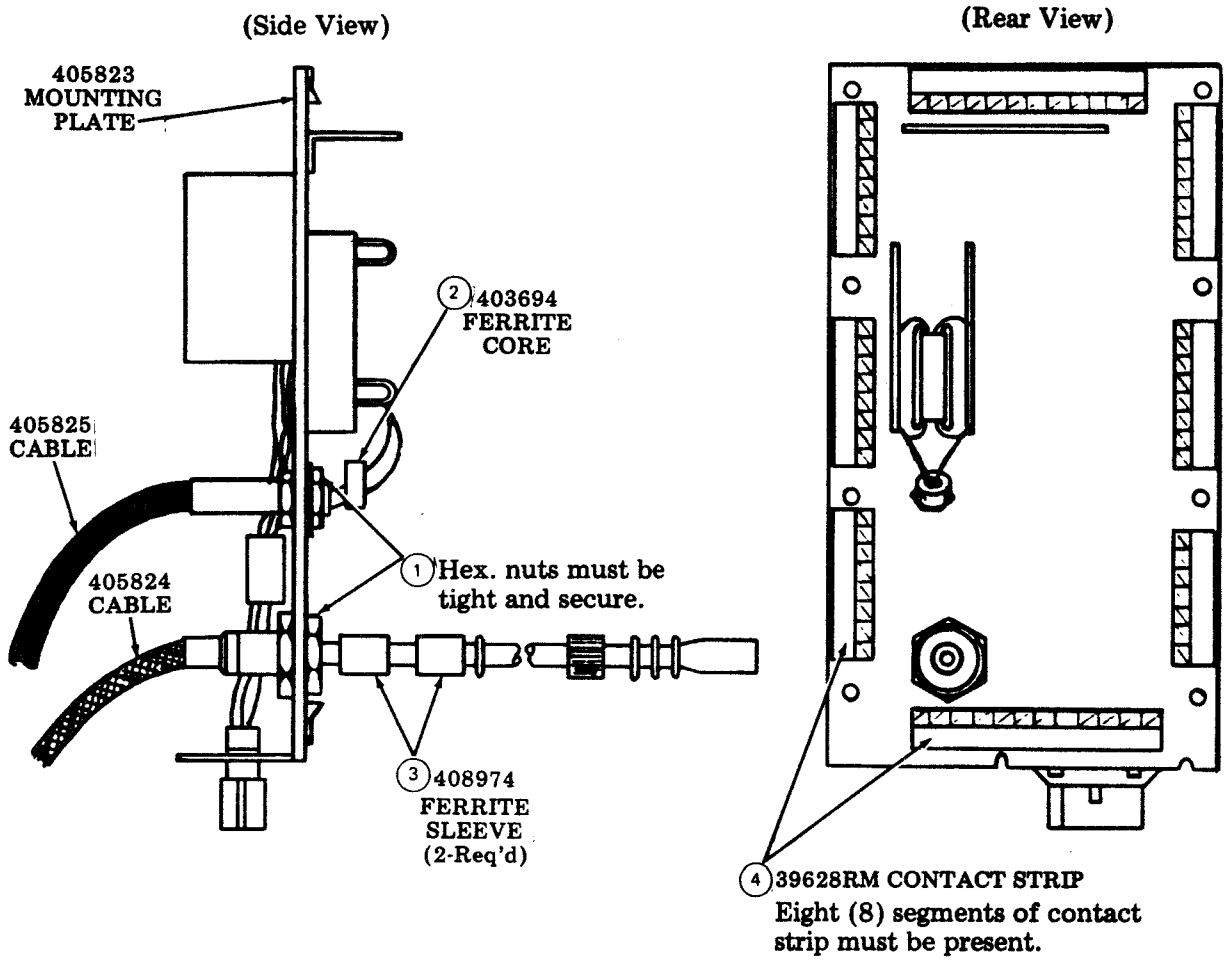

HIGH VOLTAGE PLATE ASM

1. The hex nuts that mount the two (2) Cable Assemblies (405824 and 405825) must be tight and secure to the Mounting Plate (405823).

2. The Ferrite Sleeve (403694) must be on the Cable Assembly (405825) when mounted to the High Voltage Plate (405823).

3. The Ferrite Sleeve (408974) (2-req'd) must be on the Cable Assembly (405824) when mounted to the High Voltage Plate (405823).

4. The presence of eight (8) segments of Contact Strip (39628RM) must be around the perimeter and between the Mounting Plate (405823) and the Front Housing (405821) when assembled.

FRONT ENCLOSURE W/HIGH VOLTAGE PLATE ASSEMBLY

(FRONT VIEW)

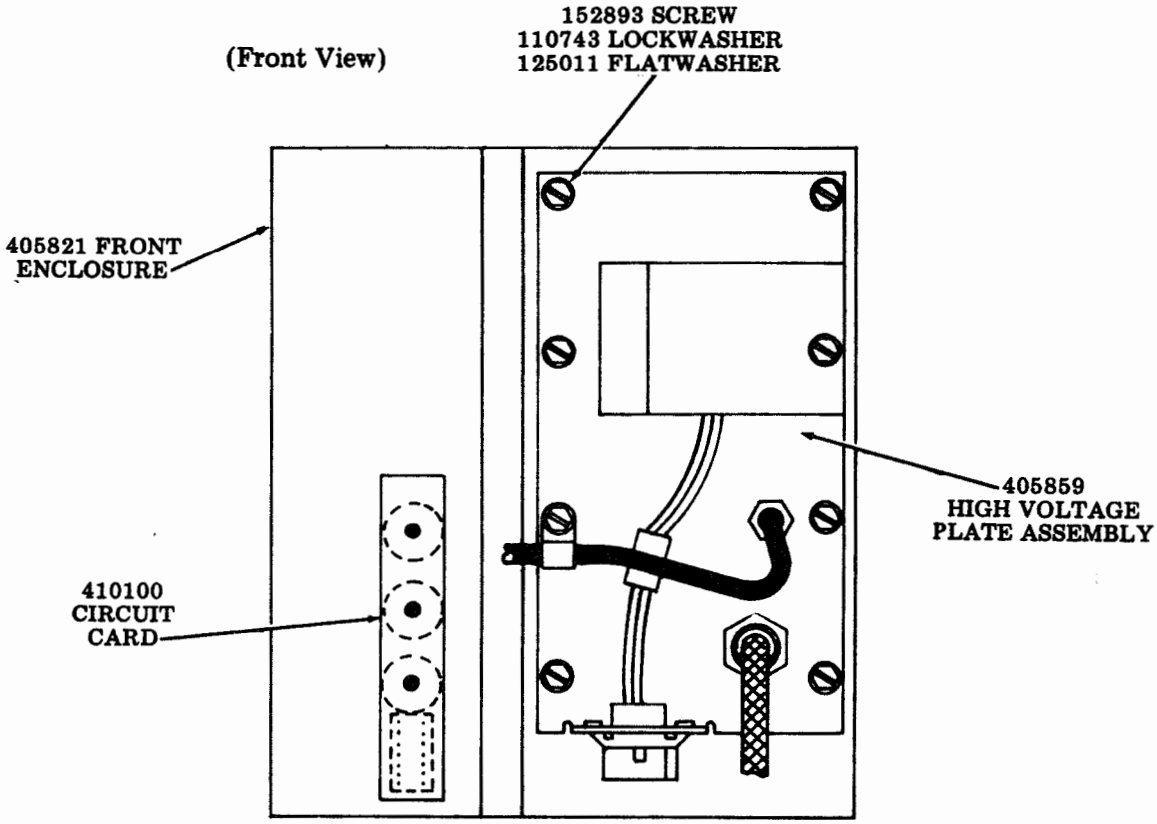

FRONT ENCLOSURE WITH HIGH VOLTAGE PLATE ASSEMBLY

The eight (8) Hex. HD. Screws (152893), Lockwashers (110743) and Flatwashers (125011) must be tight and secure when High Voltage Plate Assembly (405859) is mounted to Front Housing (405821).

B. DISPLAY MONITOR (Cont)

4. DISASSEMBLY/REASSEMBLY (Cont)

410547 Regulator Filter Assembly

- Remove 405859 high voltage plate assembly (6-11).

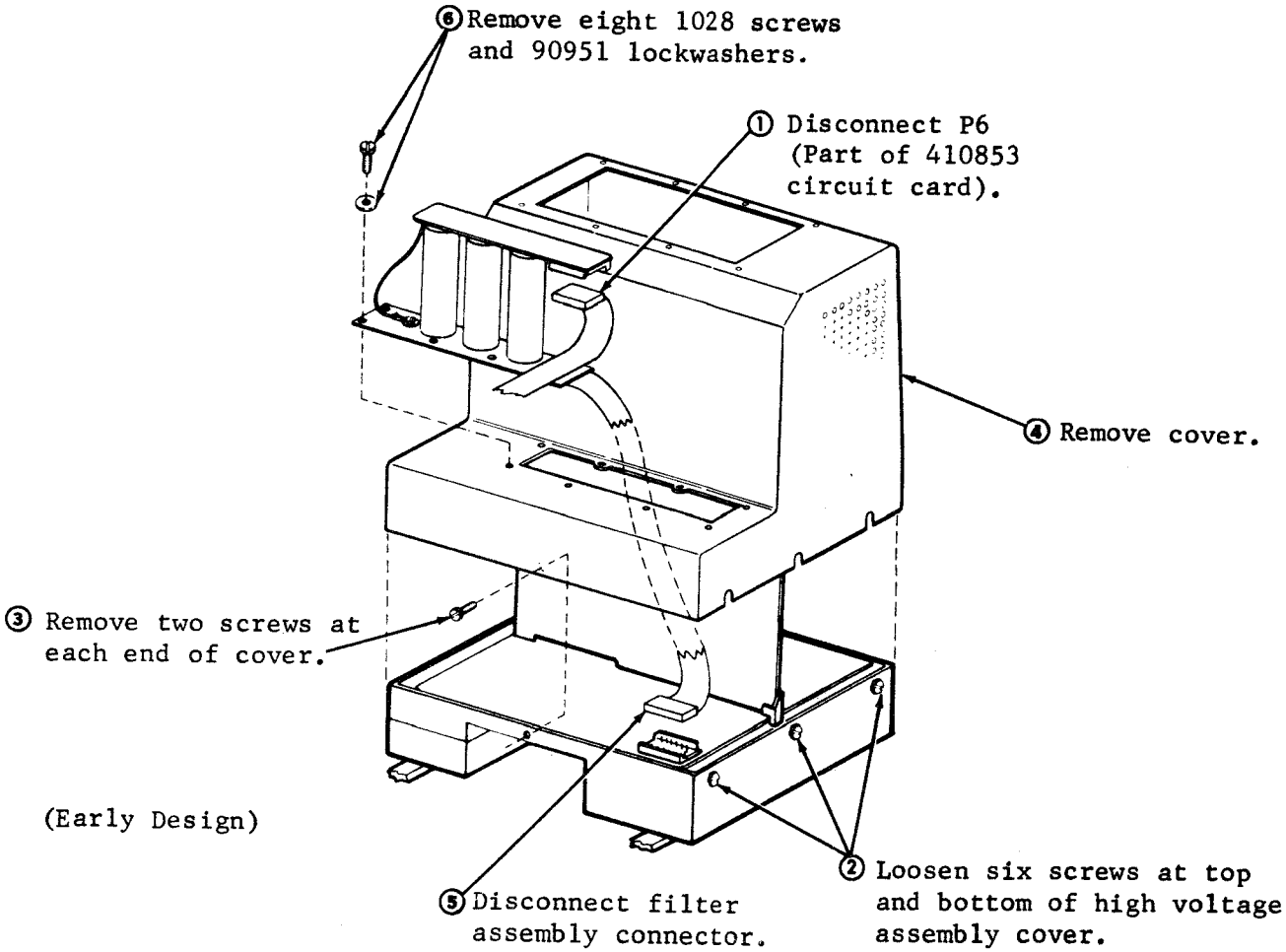

410100 Circuit Card Assembly

- Remove 405859 high voltage plate assembly (6-11).

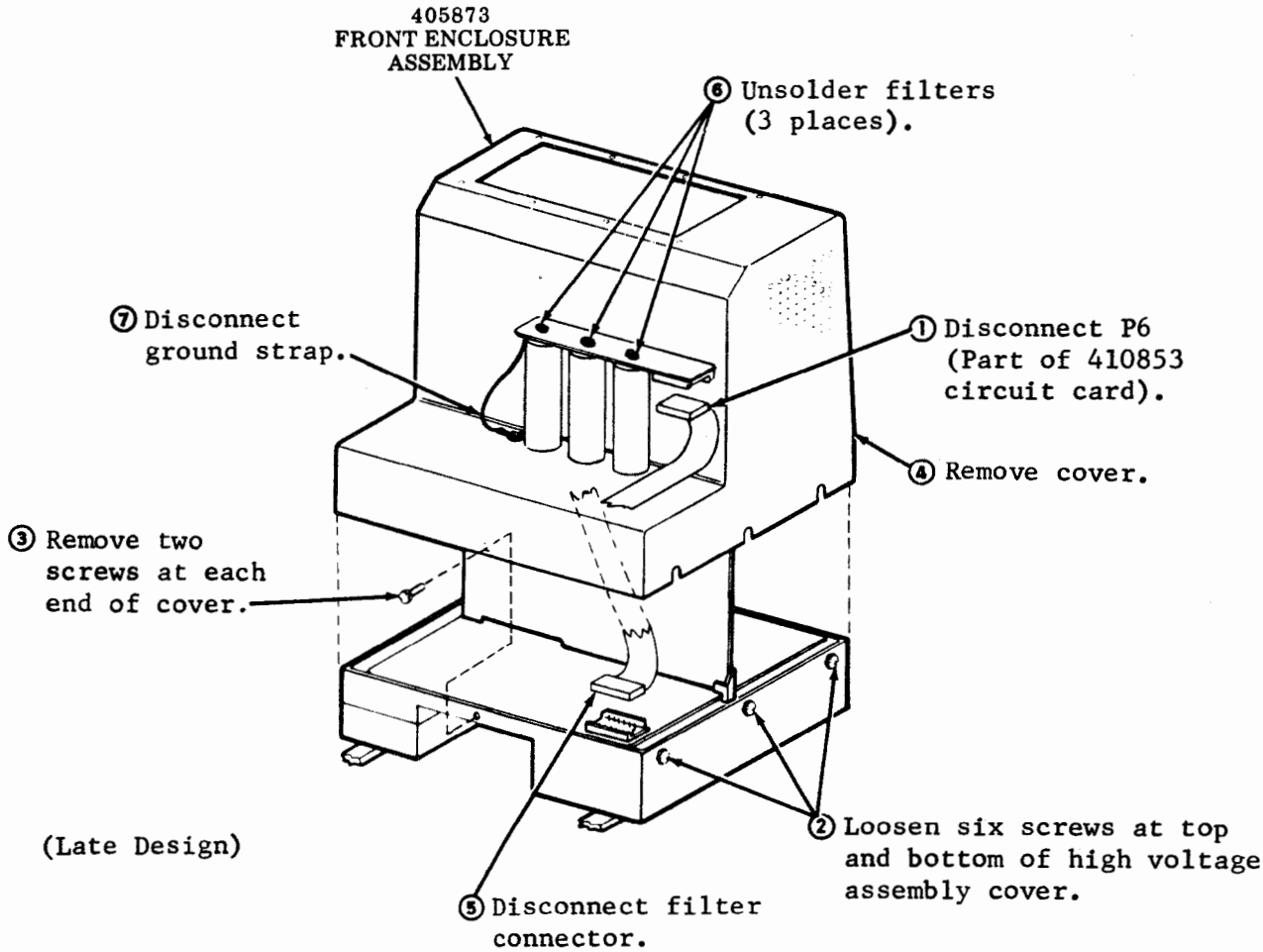

(Late Design)

NOTE: DURING REASSEMBLY, THE REQUIREMENTS SPECIFIED ON THE FOLLOWING PAGE SHOULD BE CHECKED AND MET TO INSURE PROPER OPERATION OF THE MONITOR.

B. DISPLAY MONITOR (Contd)

405873 Regulator Filter Assembly

(Top View)

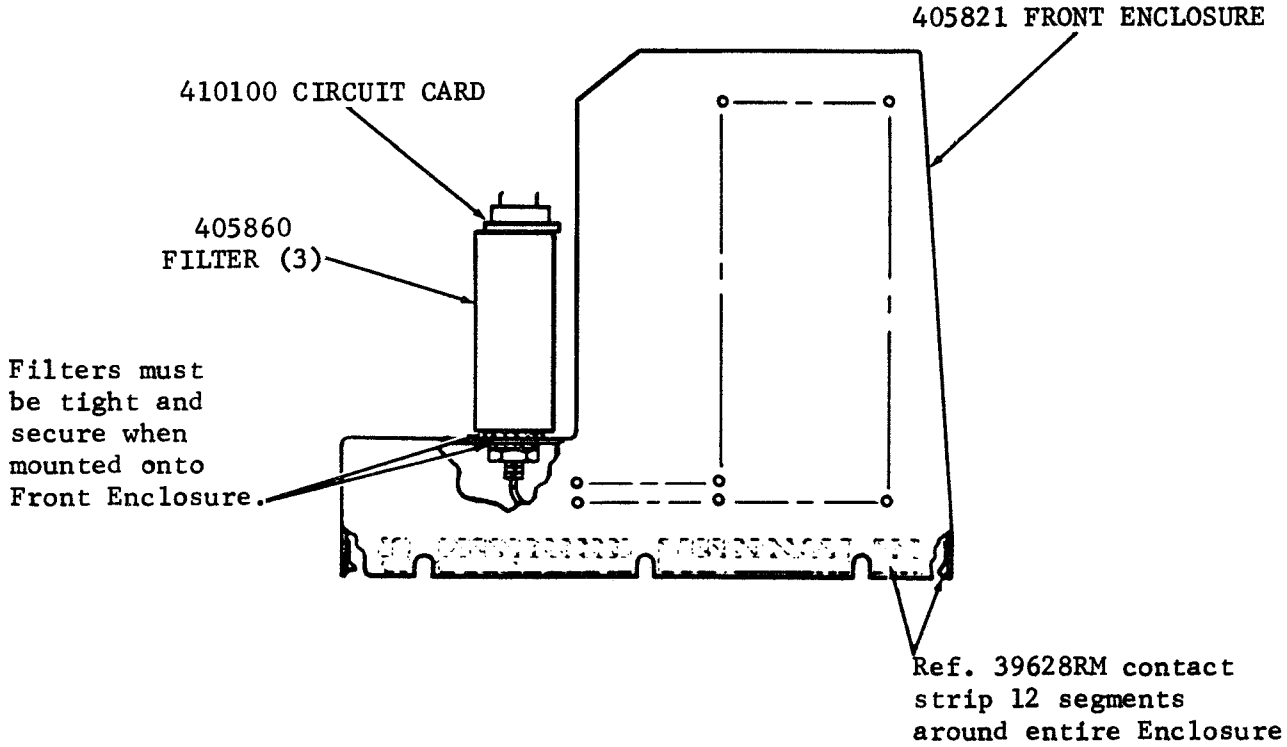

The three (3) Tubular Filter Cartridges (405860) must be tight and secure when mounted onto the Front Housing (405821).

At the Lower edge of the Front Housing (405821), check for the presence of twelve (12) segments of Contact Strip (39628RM) around entire opening and make sure that they are parallel to the Lower edge.

410546 High Voltage Circuit Card Assembly

- Remove 405859 high voltage plate assembly (6-11).
- Remove high voltage assembly cover (6-15).

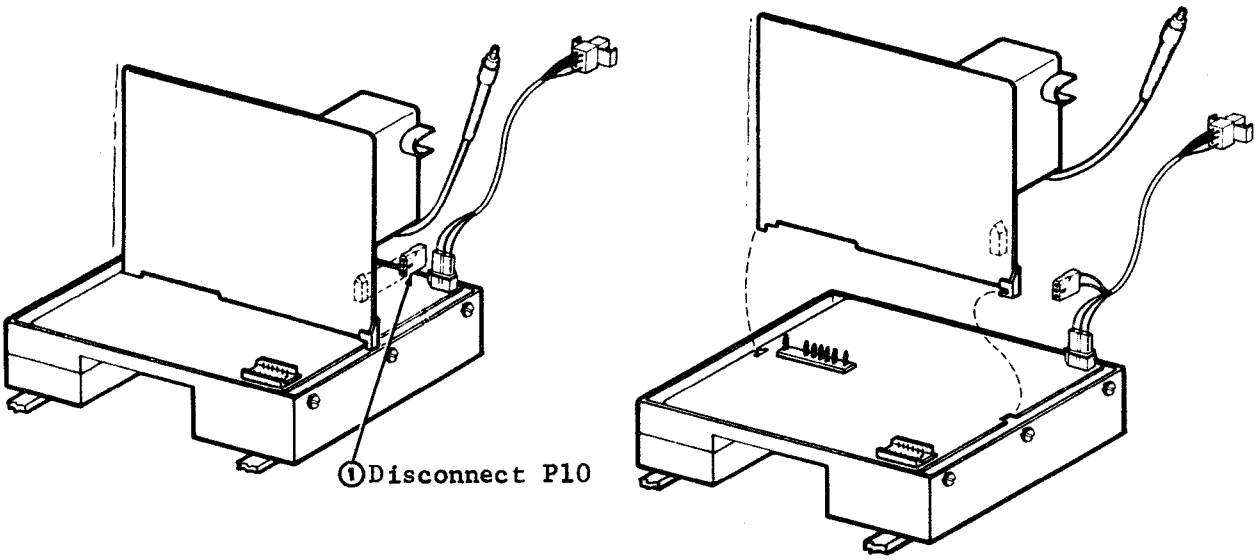

410545 Interface/Amplifier Circuit Card Assembly

- Remove 405859 high voltage plate assembly (6-11).
- Remove high voltage assembly cover (6-15).
- Remove 410546 high voltage circuit card assembly (6-17).

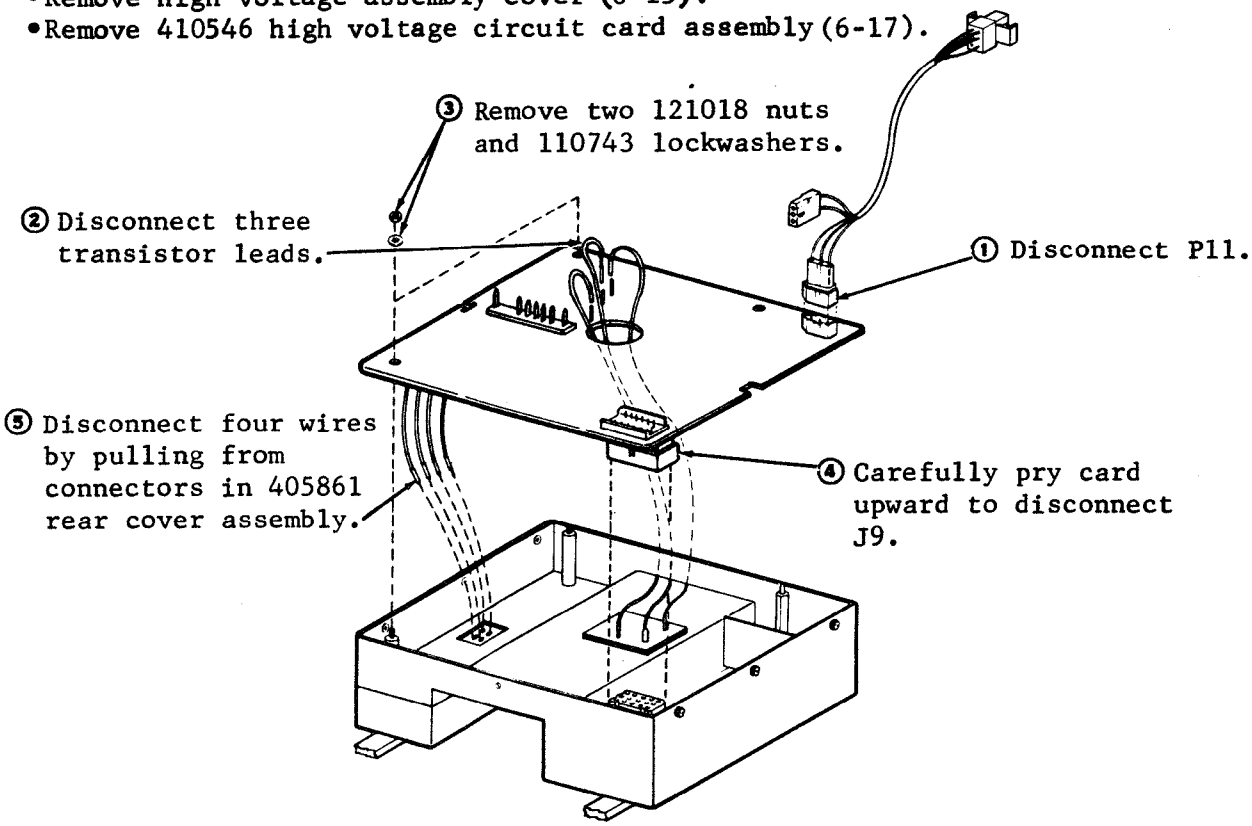

B. DISPLAY MONITOR (Contd)

4. DISASSEMBLY/REASSEMBLY (Contd)

405861 Rear Cover Assembly

- Remove 402254 high voltage and video assembly (6-10) from heat sink.
- Remove 405859 high voltage plate assembly(6-11).
- Remove high voltage assembly cover(6-15).
- Remove 410546 high voltage circuit card assembly(6-17).
- Remove 410545 interface/amplifier circuit card assembly (6-17).

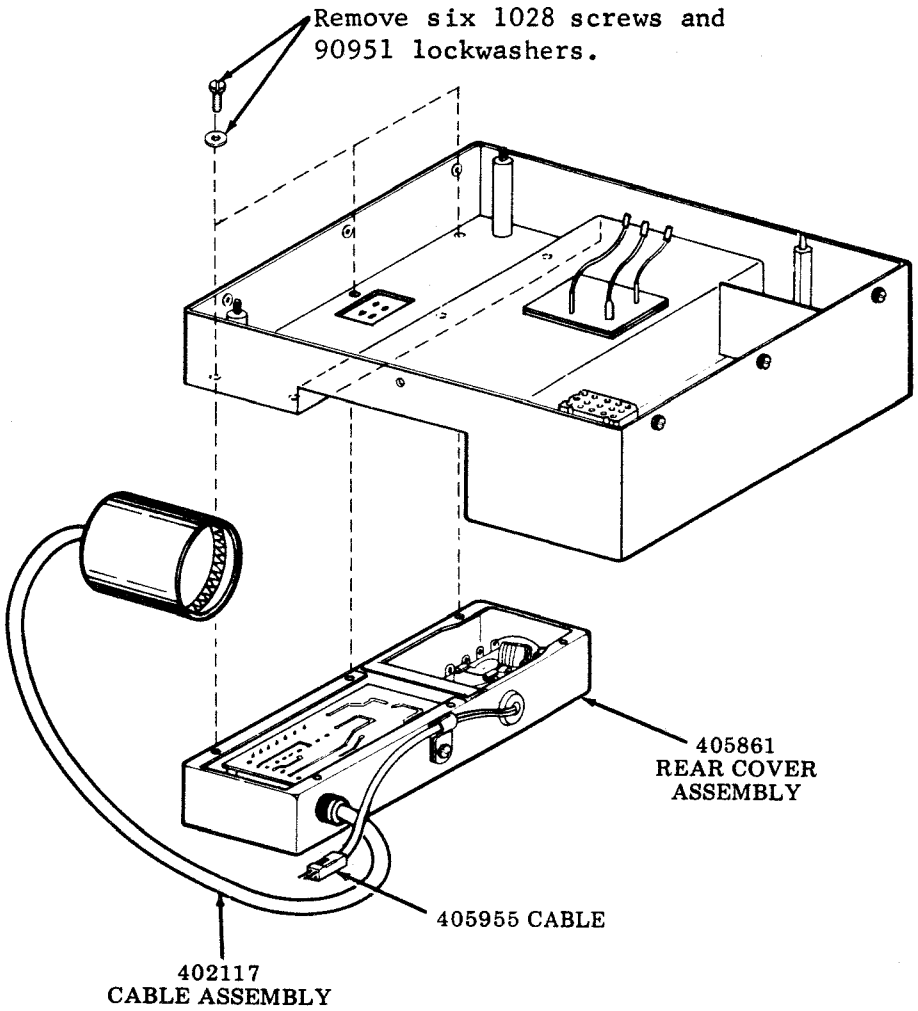

NOTE: DURING REASSEMBLY OF THE 405861 REAR COVER ASSEMBLY, THE REQUIREMENTS SPECIFIED ON THE FOLLOWING PAGE SHOULD BE CHECKED AND MET TO INSURE PROPER OPERATION OF THE MONITOR.

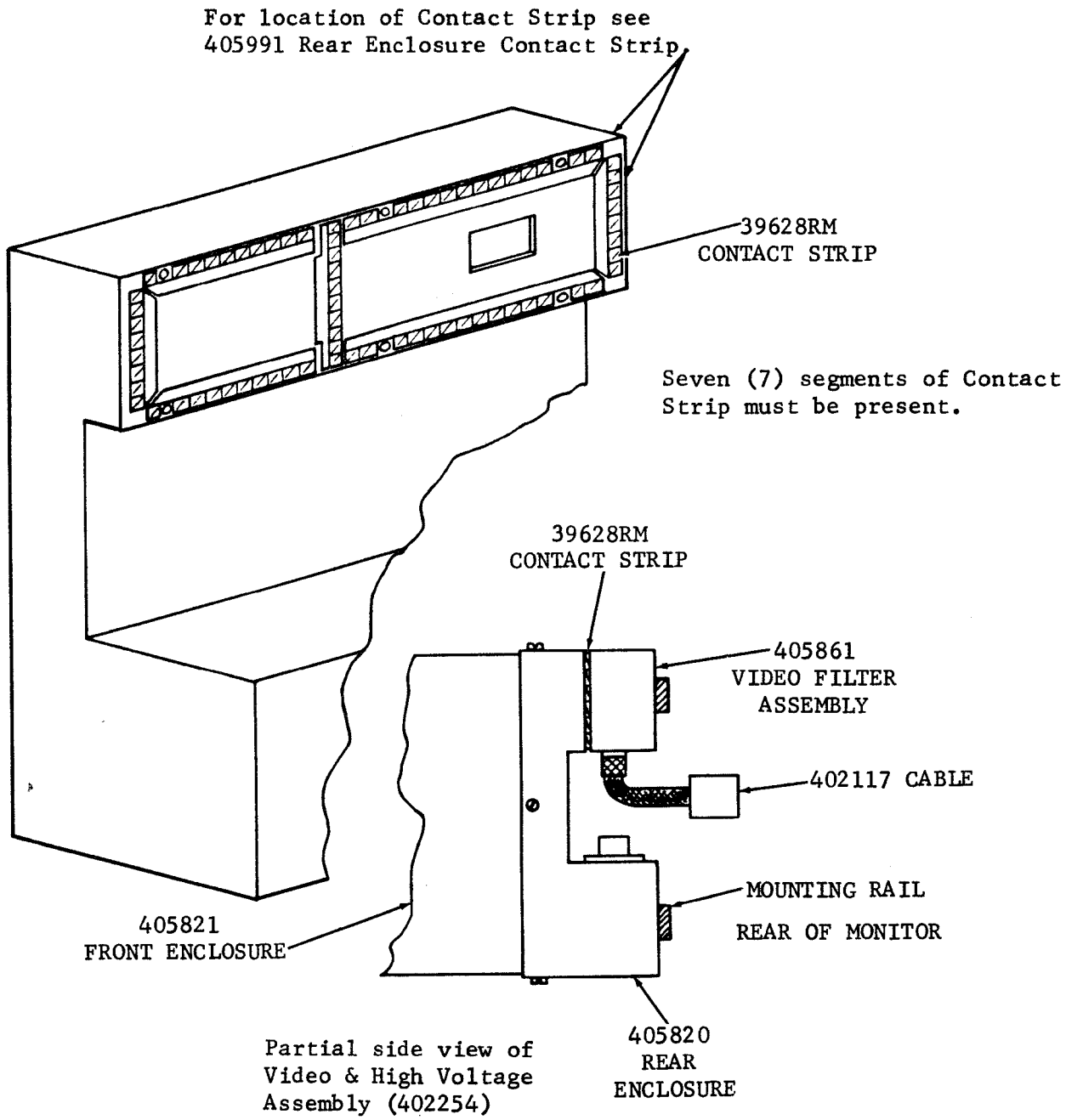

The presence of seven (7) segments of Contact Strip (39628RM) must be between the Video Filter Assembly (405861) and the Rear Housing (405820).

B. DISPLAY MONITOR (Contd)

4. DISASSEMBLY/REASSEMBLY (Contd)

410548 Video Interface Receiver Circuit Card Assembly

- Remove 405859 high voltage plate assembly (6-11).
- Remove high voltage assembly cover (6-15).
- Remove 410546 high voltage circuit card assembly (6-17).
- Remove 410545 interface/amplifier circuit card assembly (6-17).

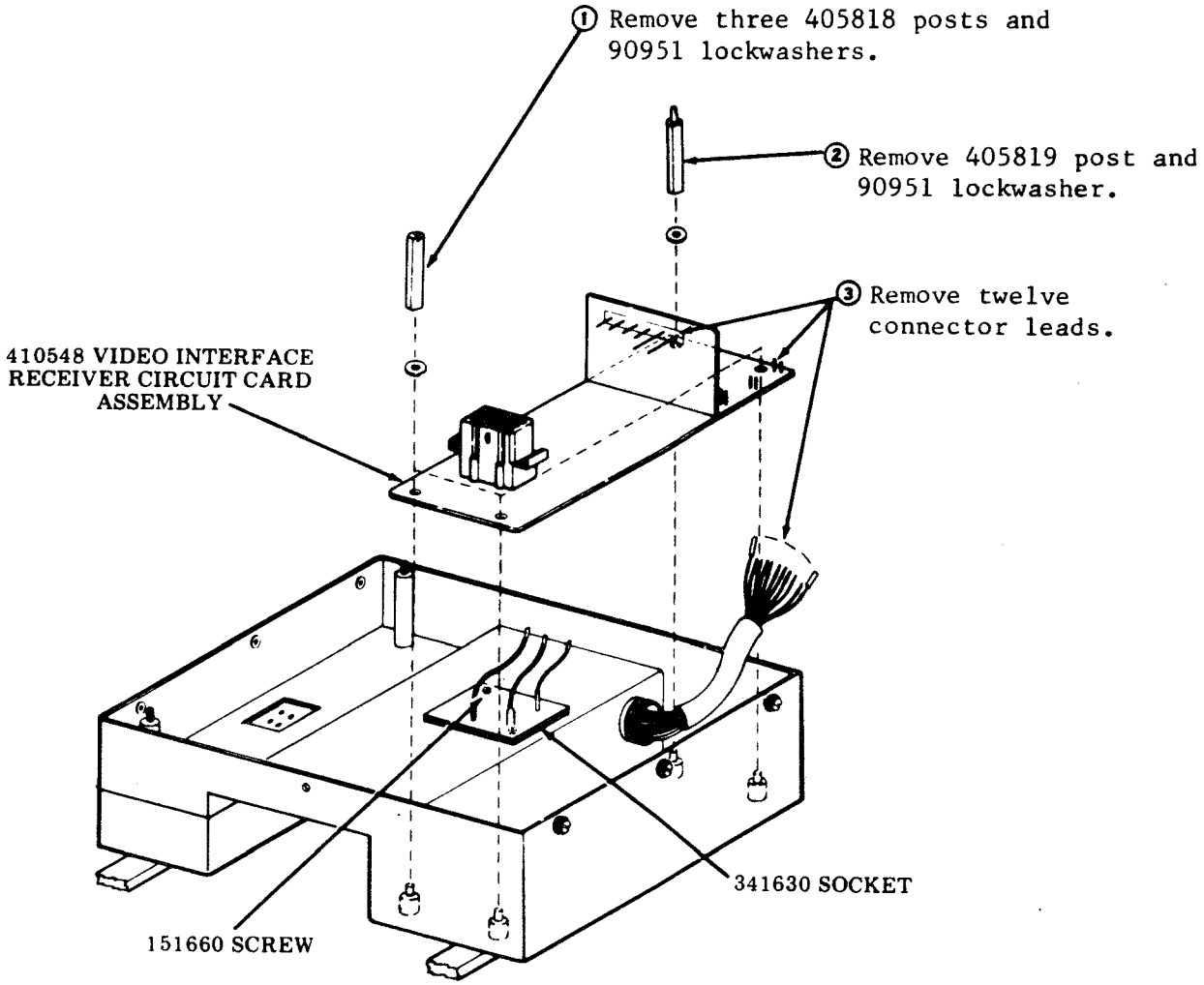

402108 Choke Assembly

•Remove 410852 rectifier circuit card assembly (6-7).

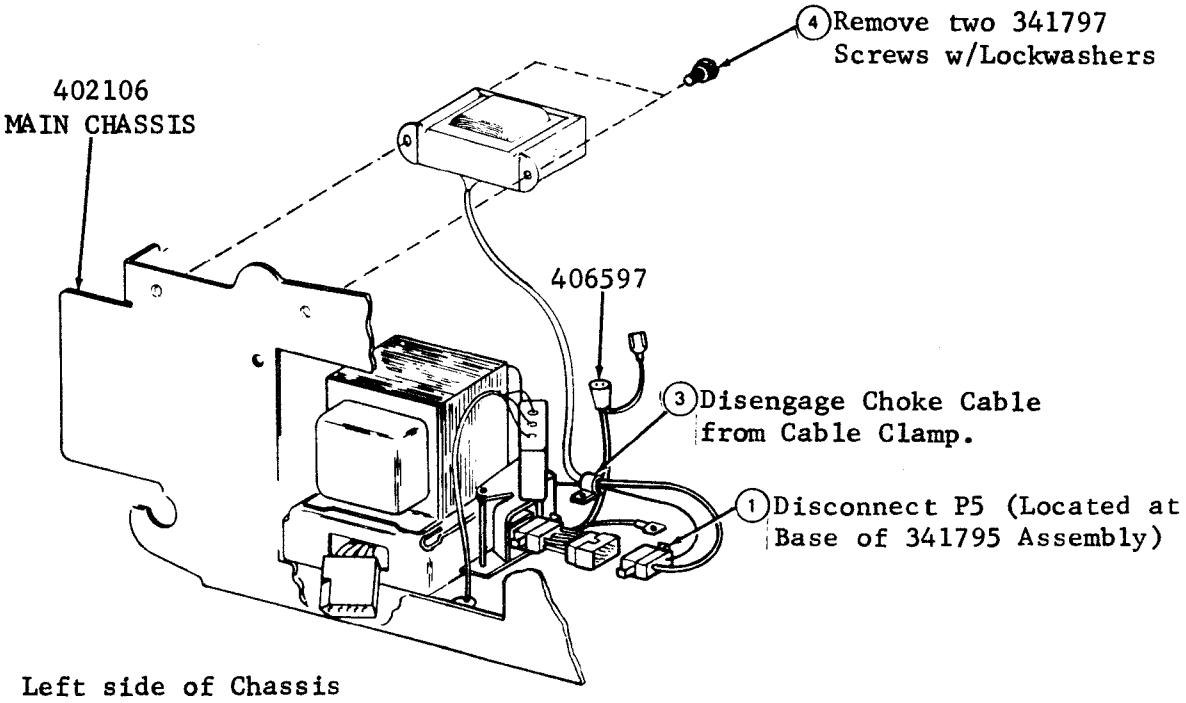

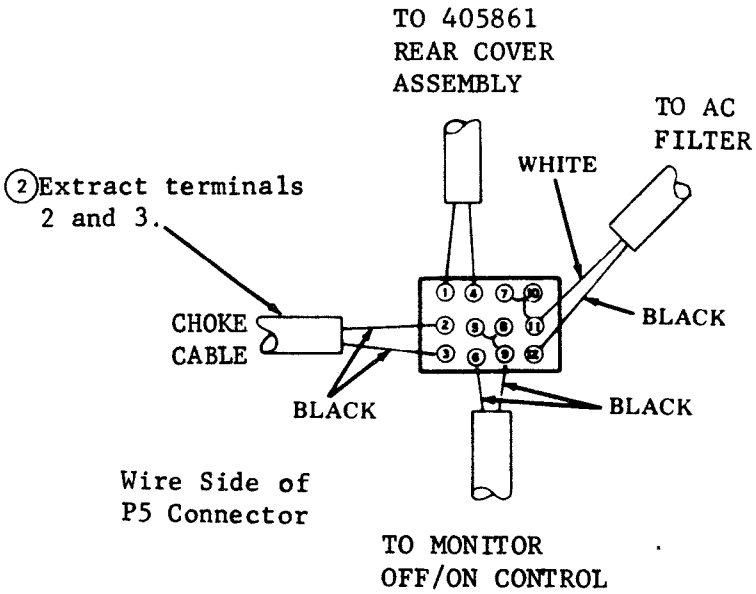

B. DISPLAY MONITOR (Contd)

4. DISASSEMBLY/REASSEMBLY (Contd)

403639 AC Filter Assembly

- Remove 410852 rectifier circuit card assembly (6-7).

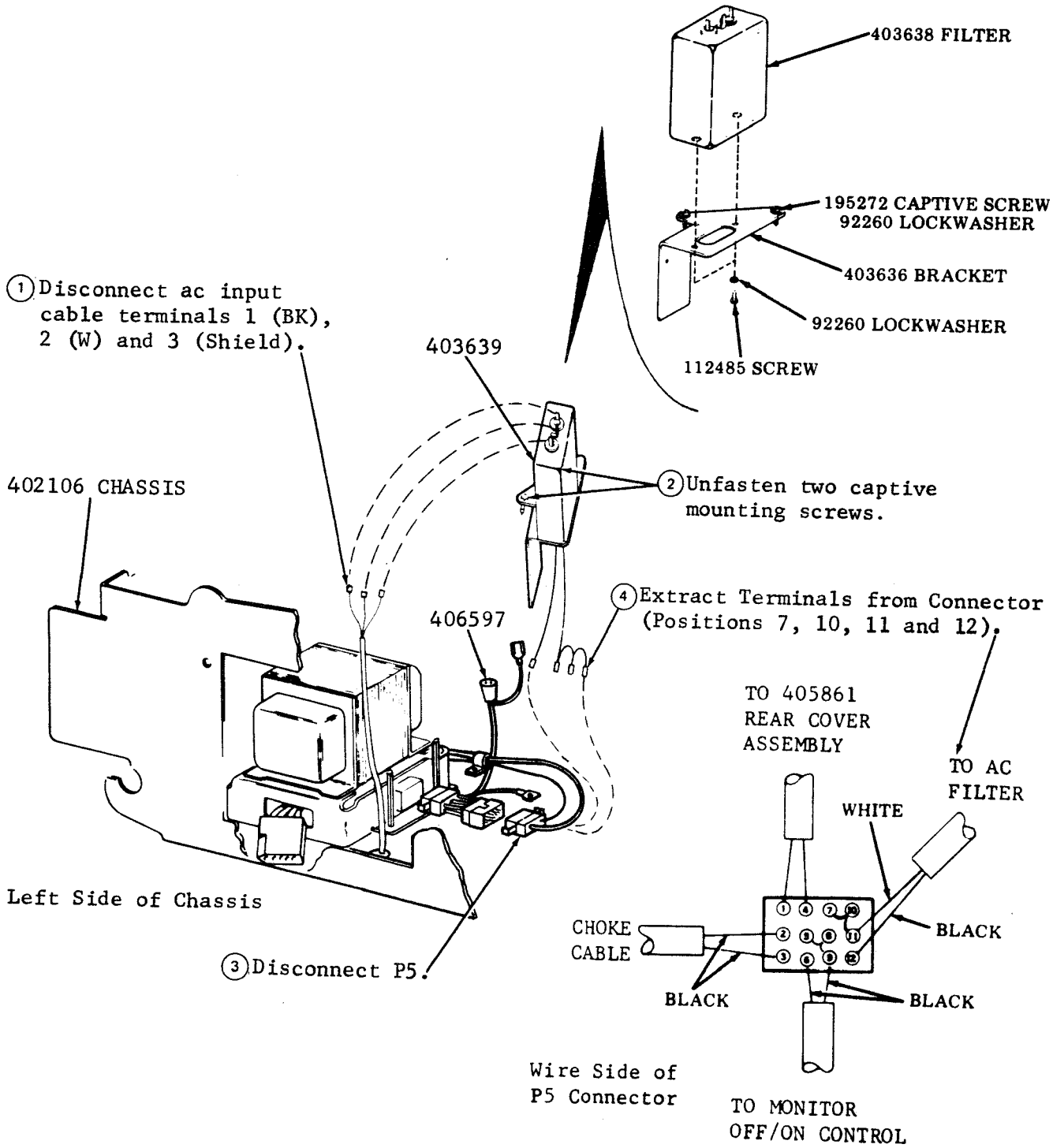

341795 (50/60 Hz) Power Distribution Assembly

Remove 410852 rectifier circuit card assembly (6-7).

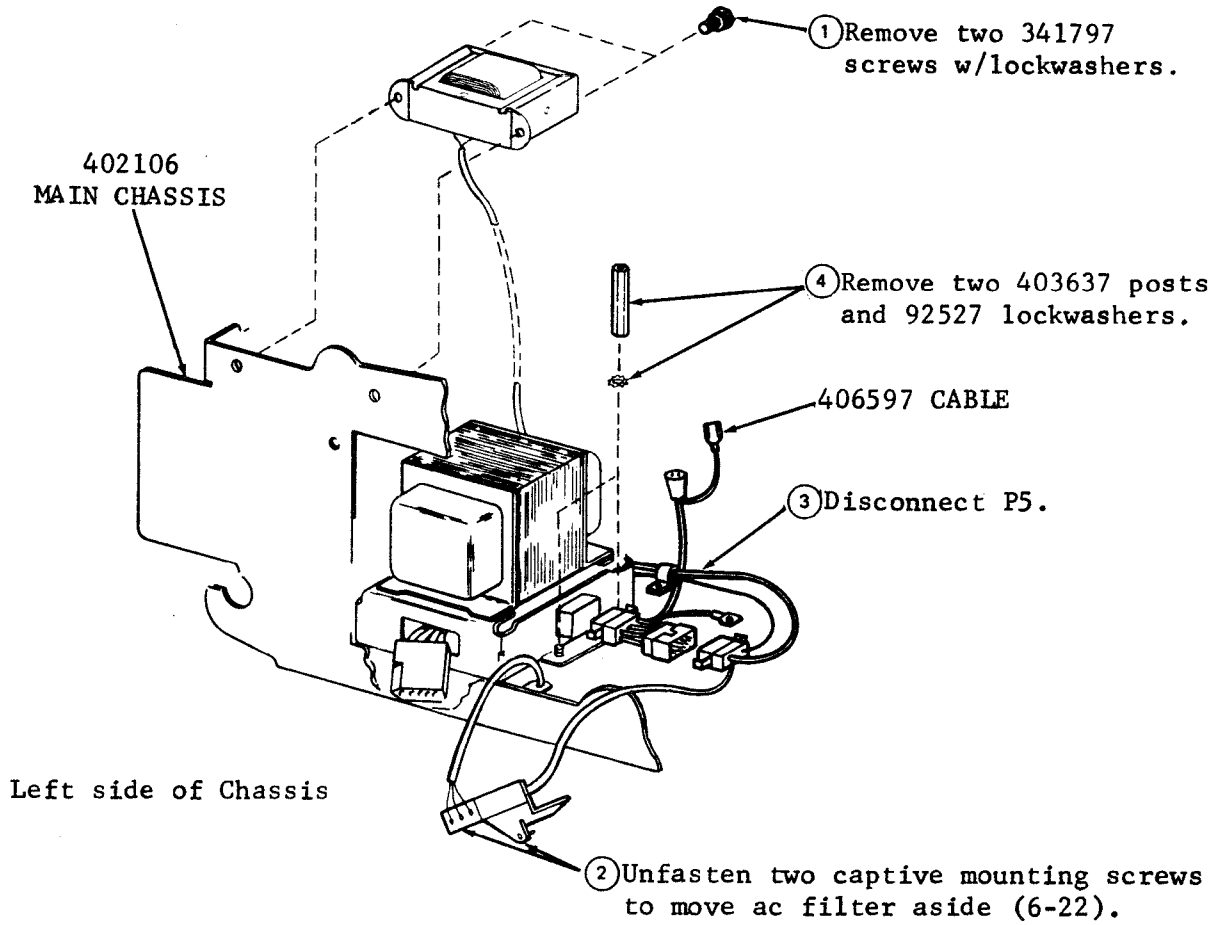

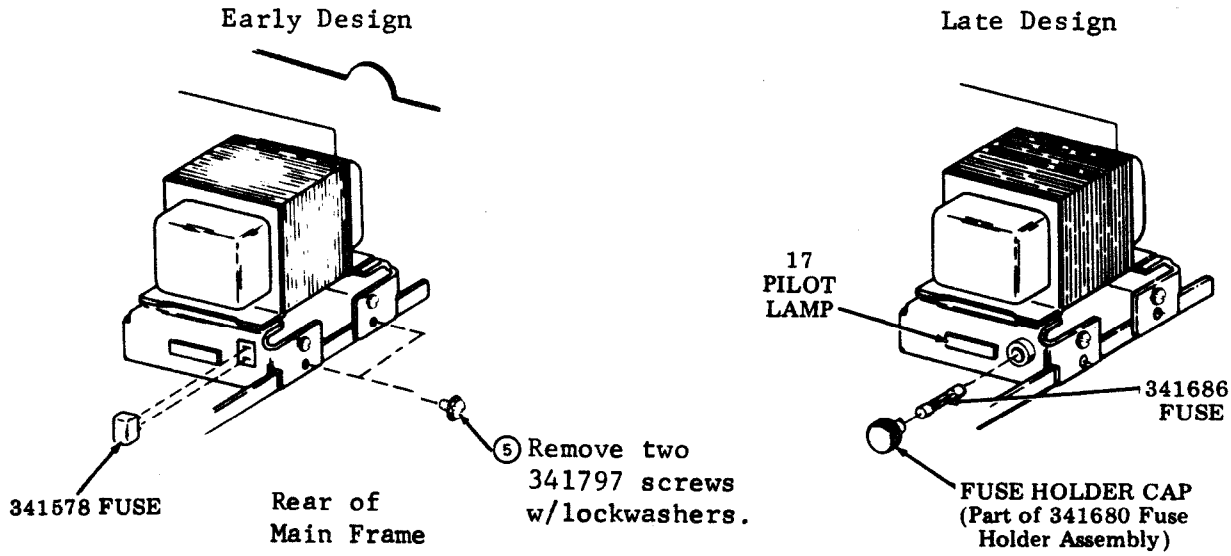

B. DISPLAY MONITOR (Contd)

4. DISASSEMBLY/REASSEMBLY (Contd)

406597 Adaptor Cable Assembly

- Remove 410852 rectifier circuit card assembly (6-7).
- Remove 403639 ac filter assembly and set aside (6-22).

Partial Top View of Monitor

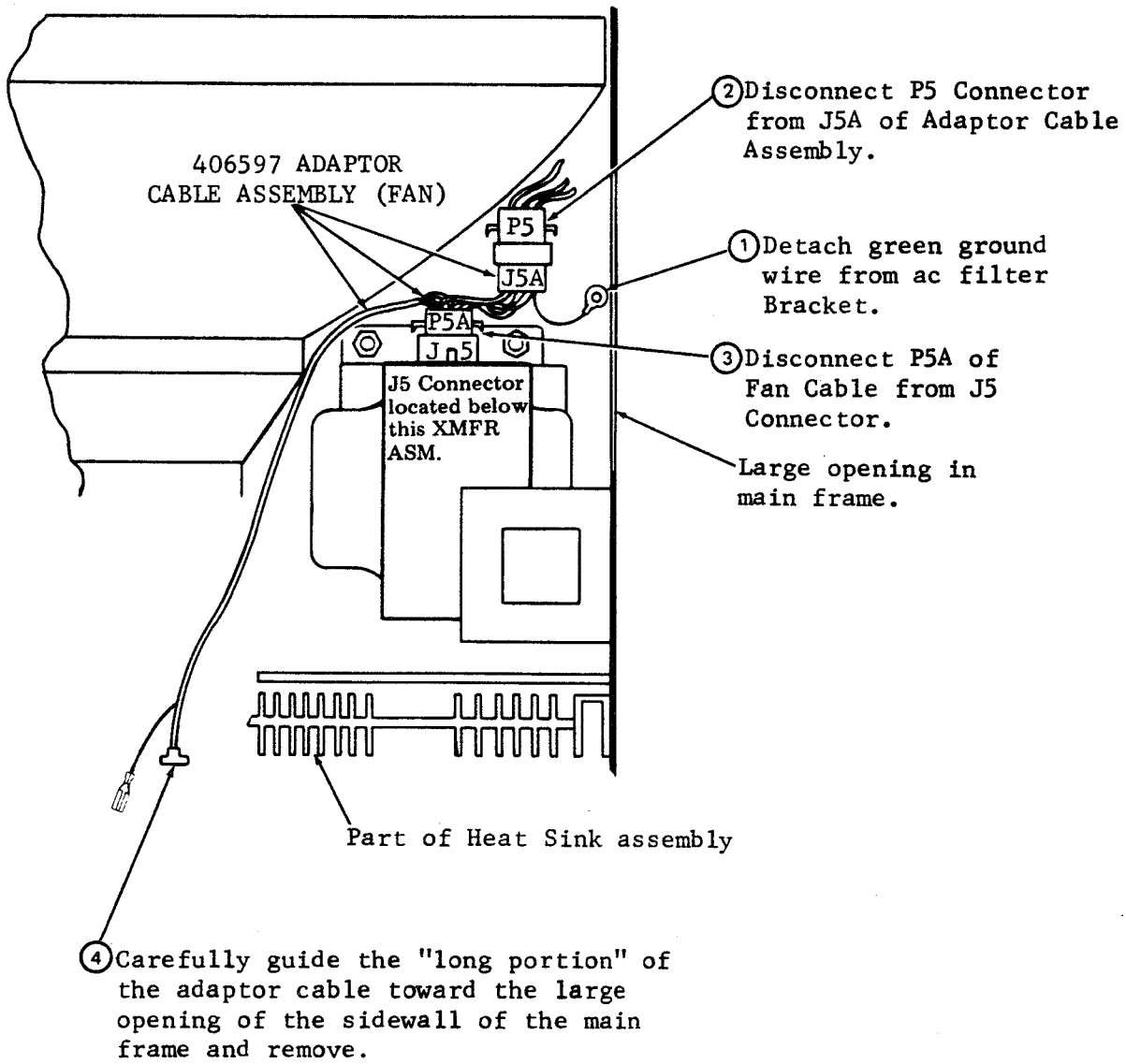

410559 Vertical Deflection Circuit Card Assembly

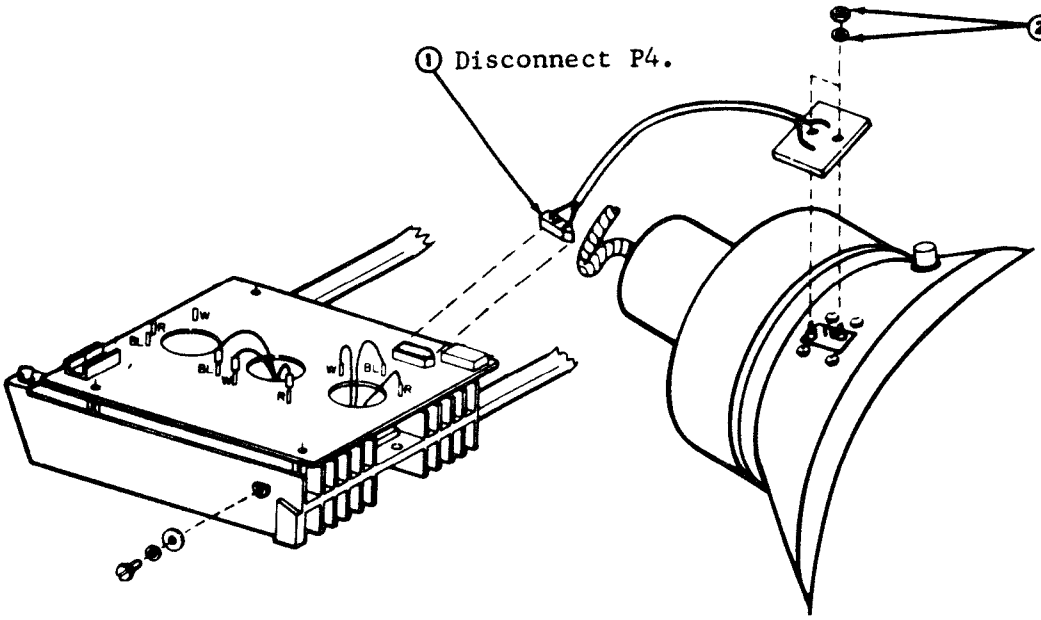

Tube Tilt Mechanism

NOTE 3: In the early design monitor, the 402285 lever was mounted with two 341730 shoulder screws.

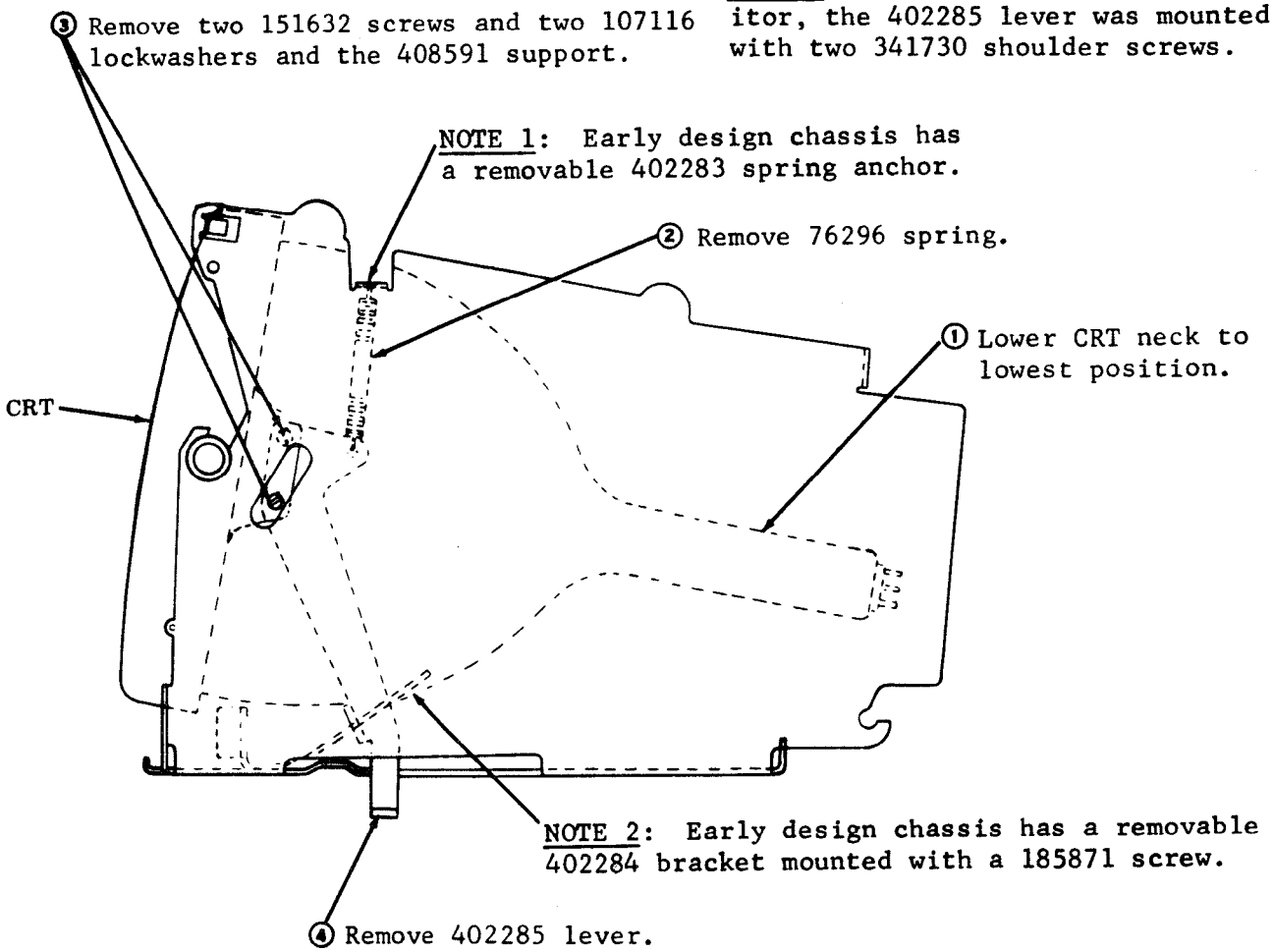

B. DISPLAY MONITOR (Contd)

4. DISASSEMBLY/REASSEMBLY (Contd)

402110 Cathode Ray Tube
405701 Deflection Yoke Assembly (See facing page for location of parts.)

- Remove 410852 rectifier circuit card assembly (6-7).

① Disengage captive mounting screws and move ac filter assembly aside.

② Disconnect J17.

③ Disconnect P15.

④ Disconnect high voltage lead from side of CRT by removing five 152893 screws, 110743 lockwashers and 125011 flat washers. Remove cover and pull connector from socket in CRT.

⑤ Disengage 410559 vertical deflection circuit card assembly from CRT (see 6-25).

⑥ Remove four 152893 screws, 110743 lockwashers, 125011 flat washers.

NOTE: Insert 402244 ferrite sleeve on filter marked "0". Above ferrite sleeve, solder one end of 328793 disc capacitor to portion of filter leg that is round. Other end of disc capacitor to be between shield and washer of screw as shown. Both leads of capacitor to be as short as possible.

⑦ Remove 402285 tube tilt lever (see 6-25).

⑧ Remove four 181523 springs.

⑨ Rotate rod rearward and remove by disengaging from holes in chassis.

⑩ Remove mask.

⑪ Remove top two 181243 screws w/lockwashers, 107116 lockwashers, and 3598 nuts to disengage ground straps.

⑫ Rotate neck of CRT toward vertical and lift to disengage pivot points from chassis.

⑬ Remove bottom two 181243 screws w/lockwashers, 107116 lockwashers, and 3598 nuts.

⑭ Remove 402112 intermediate shield.

⑮ Carefully remove shield from CRT.

⑯ Disconnect two leads.

⑰ Loosen yoke clamp screw. Slide yoke rearward off CRT neck. In reassembly, do not overtighten yoke clamp screw.

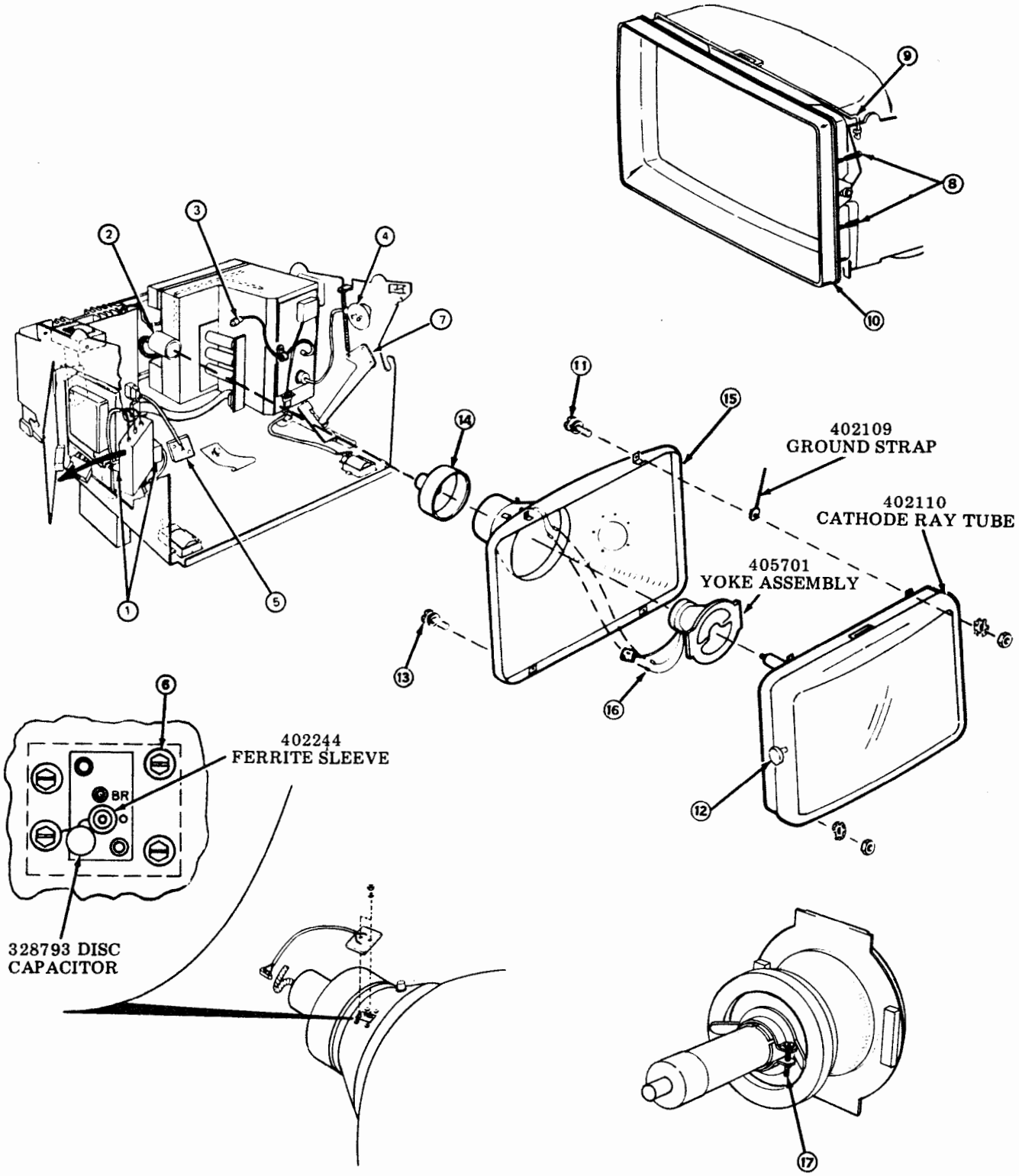

NOTE: During reassembly, the requirements specified on the following page should be checked and met to insure proper operation of the monitor.

B. DISPLAY MONITOR (Contd)

4. DISASSEMBLY/REASSEMBLY (Contd)

THIS FIGURE SHOWS ALL THE SHIELD ASSEMBLIES THAT ENCLOSE THE CRT (TOP VIEW)

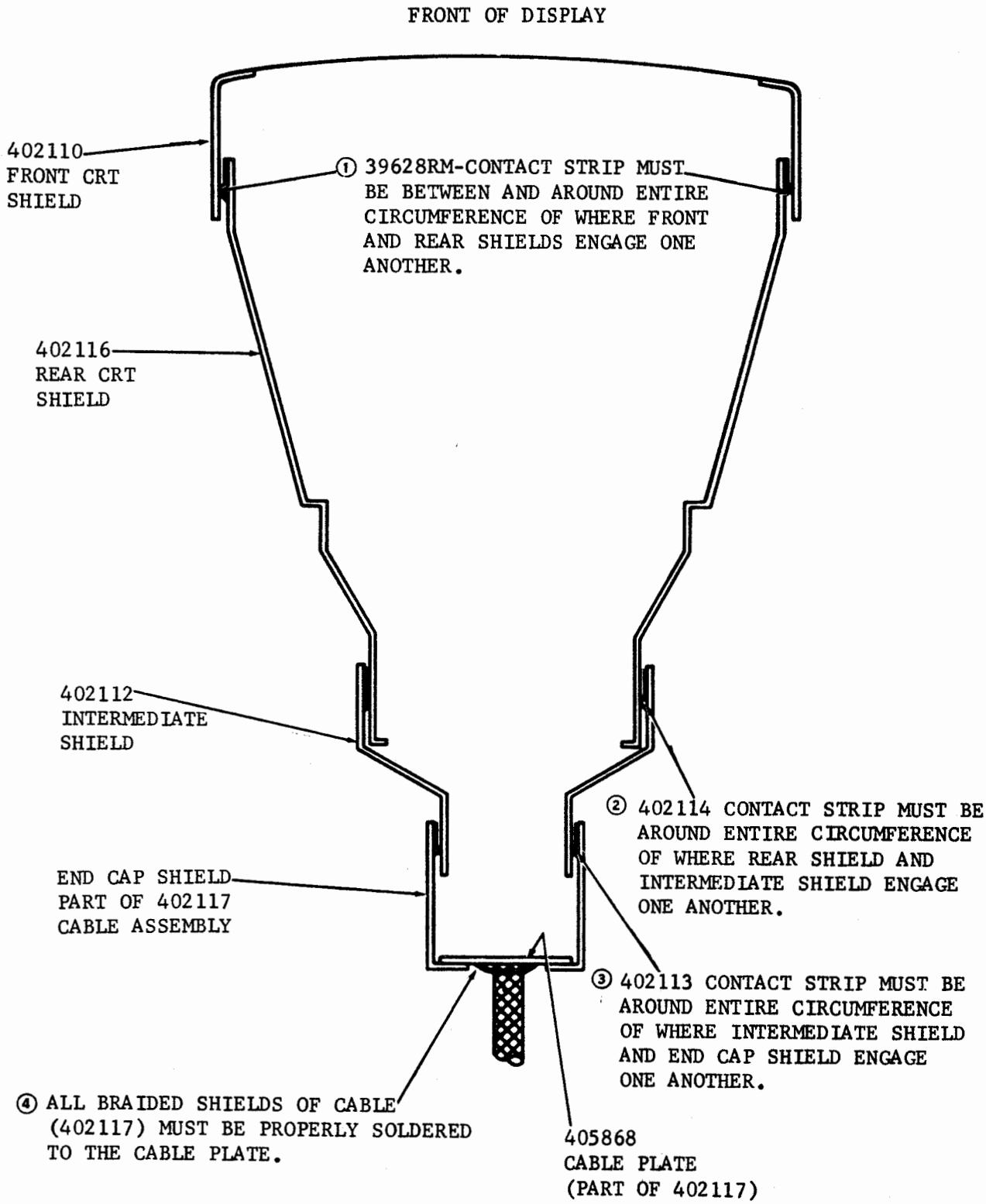

402118 Brightness Control W/Cable Assembly

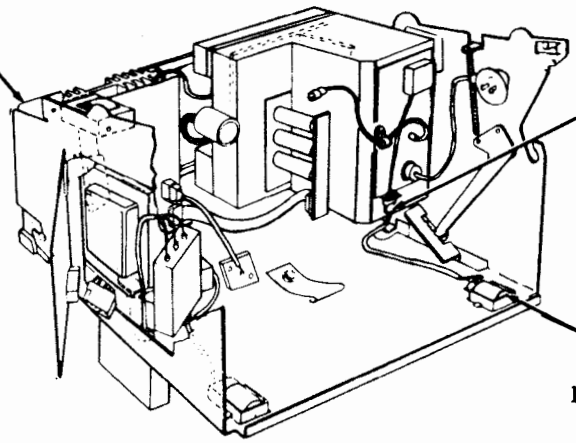

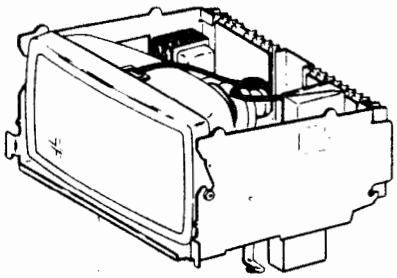

④ Remove monitor from supporting cabinet or base and rest, heat sink down, on bench top.

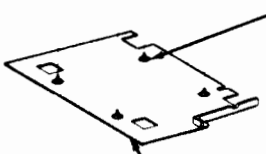

③ Remove 401108 bottom plate; pry loose at fasteners.

402118 Brightness Control W/Cable Assembly

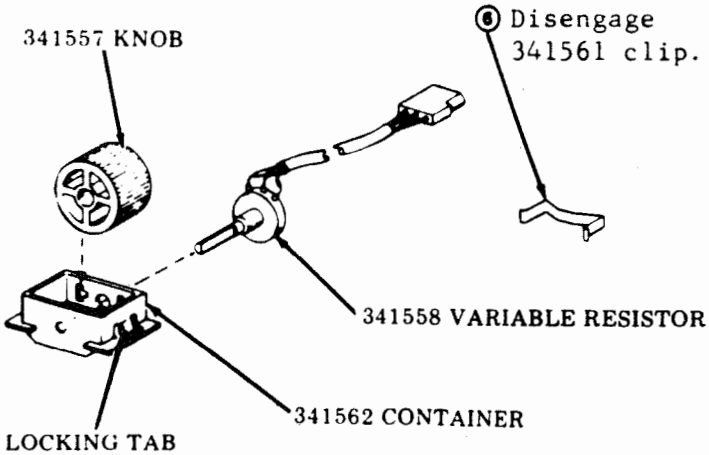

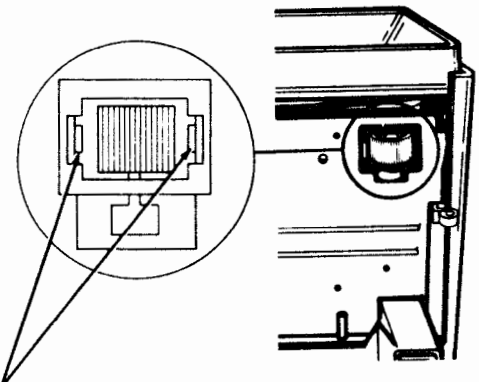

⑤ Locking tabs accessible at pry points in sides of brightness control. Pry with small screwdriver. Pull control gently outward from bottom of chassis.

B. DISPLAY MONITOR (Contd)

4. DISASSEMBLY/REASSEMBLY (Contd)

402120 Monitor Off/On Control Assembly

- Remove 410852 rectifier circuit card assembly (6-7).

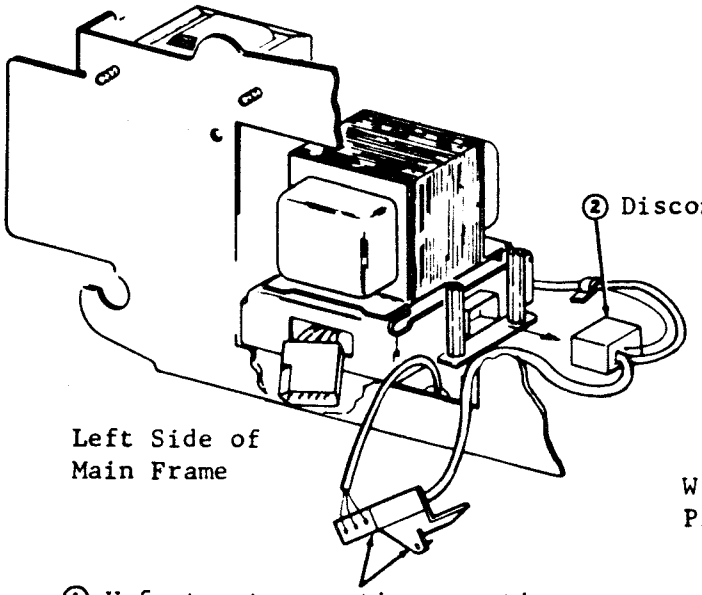

② Disconnect P5.

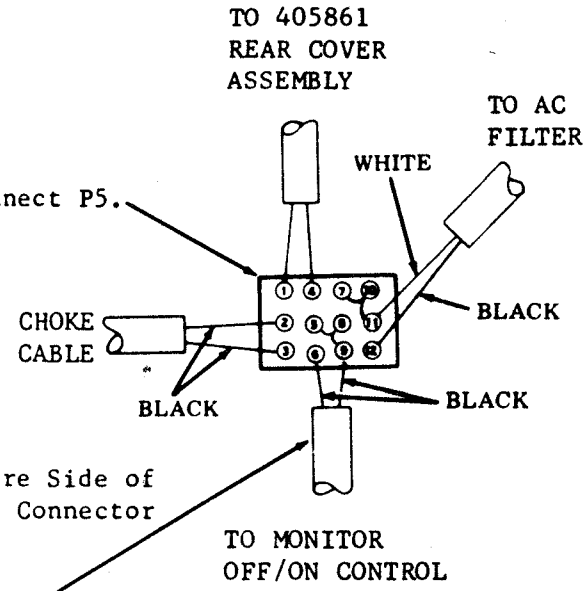

① Unfasten two captive mounting screws to move ac filter aside (6-22).

③ Extract terminals 5, 6, 8, and 9.

⑤ Secure heat sink.

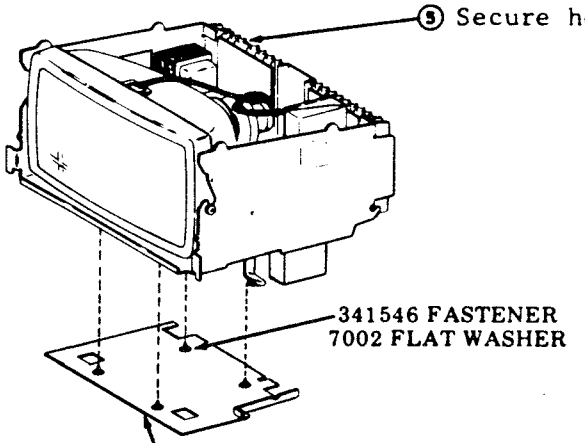

④ Remove 401108 bottom plate; pry loose at fasteners.

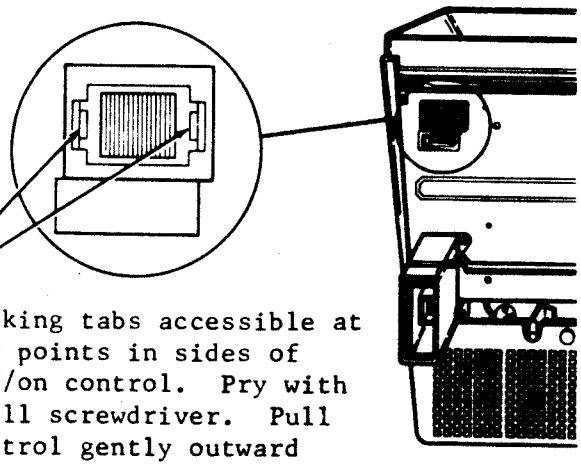

⑦ Locking tabs accessible at pry points in sides of off/on control. Pry with small screwdriver. Pull control gently outward from bottom of chassis.

⑥ Remove monitor from cabinet or base and rest, heat sink down, on bench top.

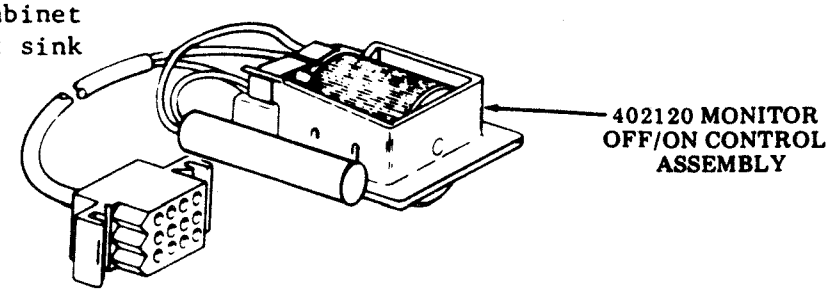

405703 AC Cable Assembly

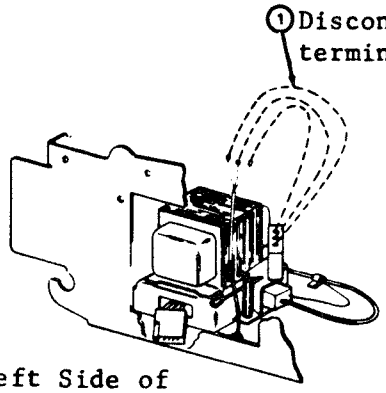

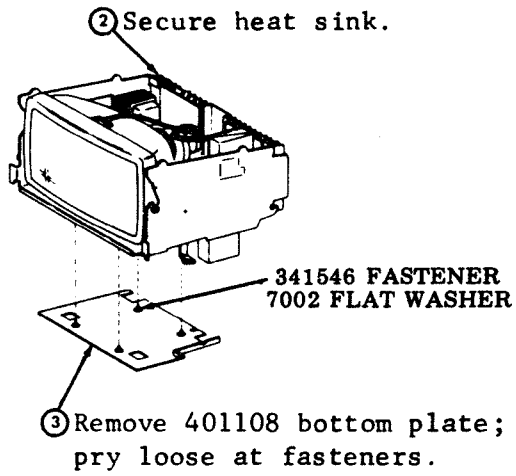

④ Remove monitor from cabinet and rest heat sink down on bench top.

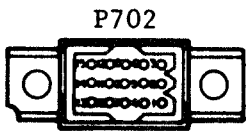

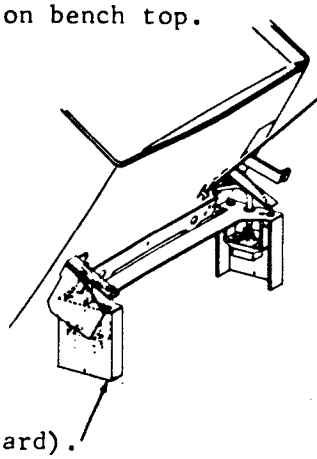

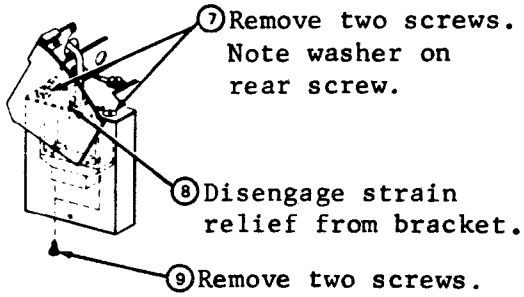

Heat Sink Transistors

① Secure heat sink in upright position.

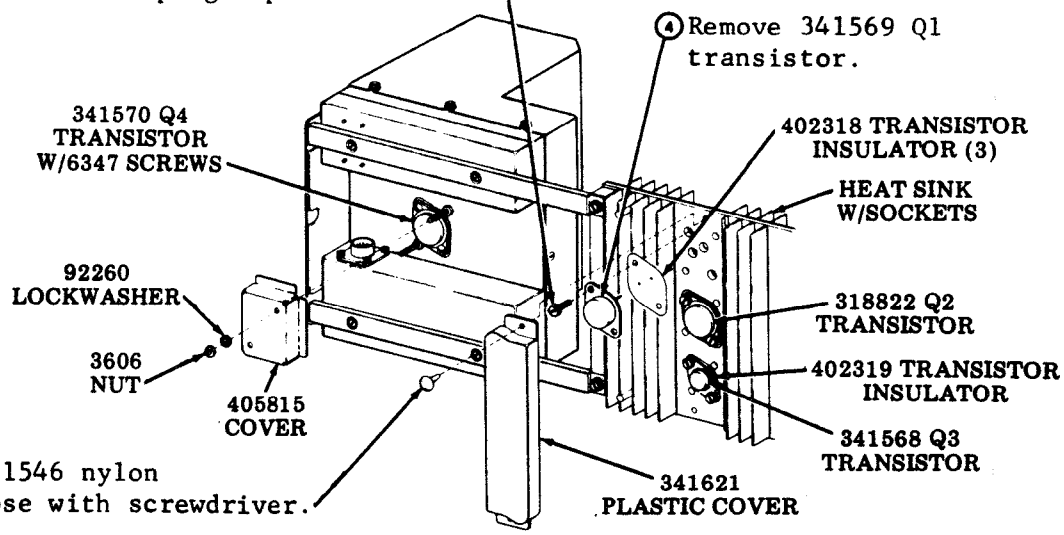

NOTE: The 402318 and 402319 transistor insulators require heat conducting paste (both sides).

C. OPCONS

1. GENERAL

Precautions should be taken to assure that the opcon is disassembled and reassembled under clean conditions. No oil, grease, or other liquids should be present on loose parts, subassemblies, keyswitches, or the complete opcon.

Reference in the procedures to left or right, up or down, and top or bottom, etc, refer to the opcon in its normal operating position.

When removing a subassembly or part from the opcon, do not force or pry parts to provide the necessary clearance for removal. No forcing is required to accomplish a removal procedure. Follow the removal procedure and note how each part is removed and the sequence of its removal so that proper reassembly can be accomplished.

40K108/RDK Opcon

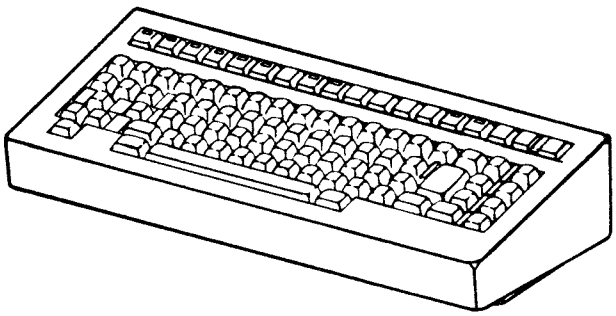

2. REMOVAL

The following procedures apply to all opcons.

To remove opcon from set or station:

① Place thumb on left inward tab of opcon and press downward to unlatched position.

② Hold opcon firmly with left hand, and with right hand place thumb on right inward tab and press downward to unlatched position.

③ Pull opcon forward to disengage from cabinet.

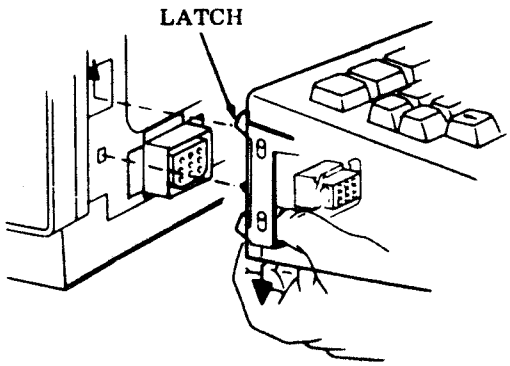

3. REPLACEMENT

The following procedures apply to all opcons.

To install opcon on set or station:

① Slide left and right latches down.

② Engage connector and left and right guides into slots.

③ Slide left and right latches upward into latched position.

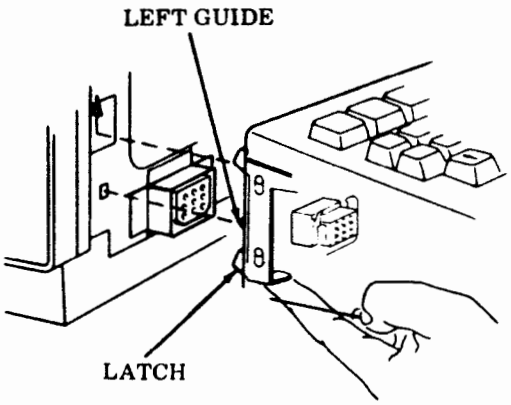

CAUTION: CHECK THAT OPCON IS FIRMLY ATTACHED ON BOTH SIDES BEFORE RELEASING HOLD.

4. SUBASSEMBLY IDENTIFICATION

NOTE: The number indicated in parentheses after each assembly designates the page covering the disassembly/reassembly procedures.

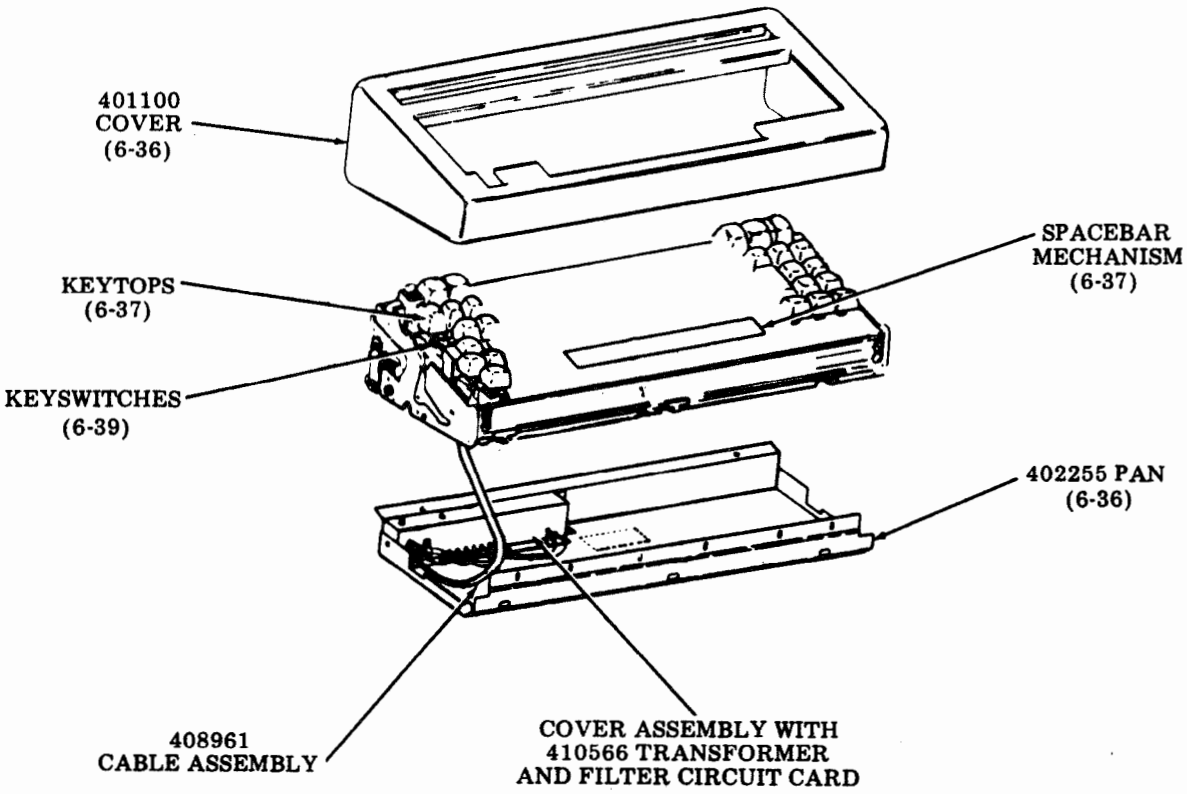

C. OPCONS (Contd)

5. CONVERSIONS

Conversions from one 40K108 opcon keyboard arrangement to another is accomplished in the following ways:

a. Disabling certain mode selections by substituting blank blocking keytops for keytops having descriptive designations.
b. Enabling certain mode selections by substituting keytops with descriptive designations for blank blocking keytops.

Keyboard arrangements are directly related to the various Tempest Model 40 Set arrangements relative to selectable controller and/or printer options. The variable keytops involved are shown and described.

Keyboard Arrangement 40K108/ RDK

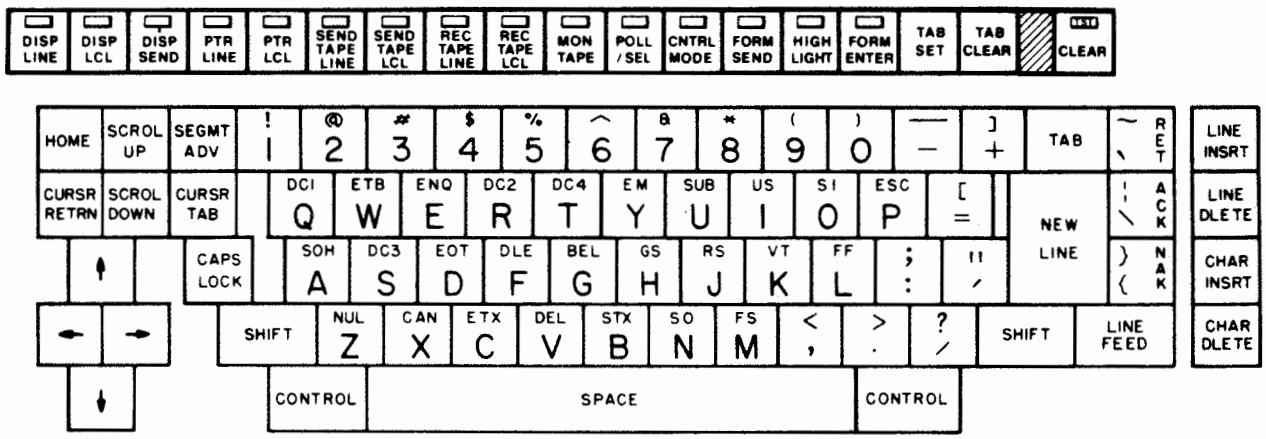

Key repeats when held fully depressed. 340701 blocking keytop.

All 40K108 opcons have the same typewriter field, cursor controls and editing features keytop arrangement.

Control Keytop

a. Indicator
b. Nonindicator

Data Keytop

Blocking Keytops

a. Control

b. Data

c. Wide Cursor Tab

6. KEYTOP AND KEYSWITCH IDENTIFICATION

Keytop Identification

TP PART NO.	KEYTOP DESCR	TP PART NO.	KEYTOP DESCR	TP PART NO.	KEYTOP DESCR
340701	BLOCKING(Control)	340860	FF L	346102	LOCAL
340714	BLOCKING (Data)	340861	: ;	346103	S/R
*340767	NEW LINE	340862	" /	346104	PRINT ON LINE
340818	HOME	340863	LINE DLETE	346105	PRINT LOCAL
340819	SCROL UP	340865	←	346106	INTRPT
340821	' 1	340866	→	346107	HIGH LIGHT
340822	@ 2	340867	SHIFT	346108	FORM ENTER
340823	# 3	340868	NUL Z	346110	TAB SET
340824	$ 4	340869	CAN X	346111	TAB CLEAR
340825	% 5	340870	ETX C	346121	FORM SEND
340826	^ 6	340871	DEL V	346123	MSG WTG
340827	& 7	340872	STX B	346124	OPT II
340828	* 8	340873	SO N	346126	PARITY ERROR
340829	(9	340874	FS M	346127	TERM READY
340830	) 0	340875	< ,	346158	CLEAR TO SEND
340831	— -	340876	> .	346159	KBD OVRN
340835	CURSR RETRN	340877	? /	346170	DISP LINE
340836	SCROL DOWN	340879	↓	346171	DISP LCL
340837	CURSR TAB	340880	CONTROL	346172	DISP SEND
340838	DC1 Q	340881	CHAR INSRT	346173	PTR LINE
340839	ETB W	340882	CHAR DLETE	346174	PTR LCL
340840	ENQ E	340887	SUB U	346175	SEND TAPE LINE
340841	DC2 R	340888	TAB	346176	SEND TAPE LCL
340842	DC4 T	340889	] +	346177	REC TAPE LINE
340843	EM Y	340890	[=	346178	REC TAPE LCL
340845	US I	340891	RETURN	346179	MON TAPE
340846	SI O	340892	} NAK {	346180	POLL/SEL
340847	ESC P	340893	| ACK \	346181	CNTRL MODE
340849	LINE INSRT	340894	CAPS LOCK	346259	BLOCKING
340850	↑	340895	SEGMT ADV		(Wide Cursor Tab)
340852	SOH A	340896	~ SYN `	346449	~ ` Rs T
340853	DC3 S	340897	DLE F	346450	; :
340854	EOT D	340898	CURSOR TAB (Wide)	347155	INT
340856	BEL G	340986	LINE FEED	347264	~ \ LF
340857	GS H	340992	~ \	405933	CLEAR
340858	RS J	346100	SEND	405935	BLANK W/TST
340859	VT K	346101	REC		INDICATOR

*The 340764 compression spring between the 340767 keytop and the housing must be ordered separately.

Keyswitch Identification

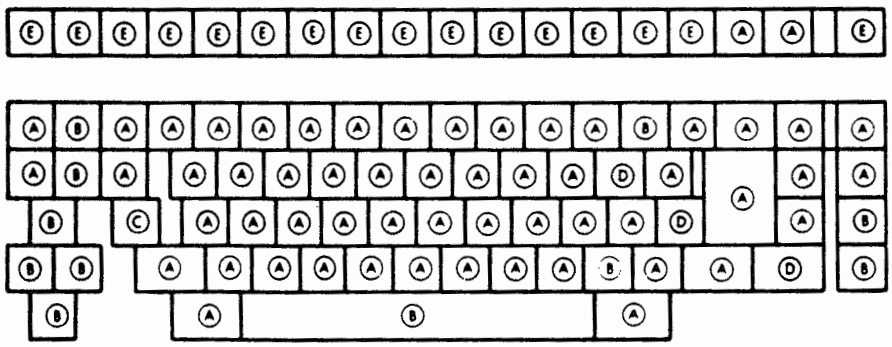

KEYSWITCH NO.	TYPES	PUSH ROD COLOR
Ⓐ 340720	Basic	White
Ⓑ 340721	Repeat	Green
Ⓒ 340722	Latching	Black
Ⓓ 341097	Combination	Yellow
Ⓔ 405925	Indicator	Black

C. OPCONS (Contd)

7. DISASSEMBLY/REASSEMBLY

401100 Cover

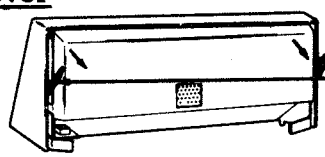

① Stand opcon upright on back side as shown.

② Use a thin bladed screwdriver or orange stick and pry left and right levers down. Remove cover.

402255 Pan

① Remove six 152893 screws, 110743 lockwashers and 125011 flat washers.

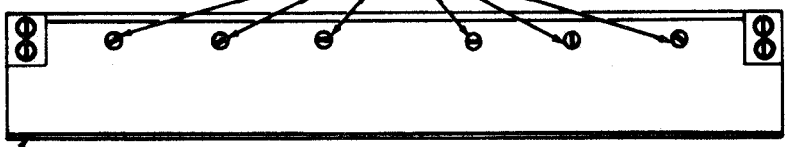

(Front View of Opcon)

② Remove eight 152893 screws, 110743 lockwashers and 125011 flat washers.

402255 PAN

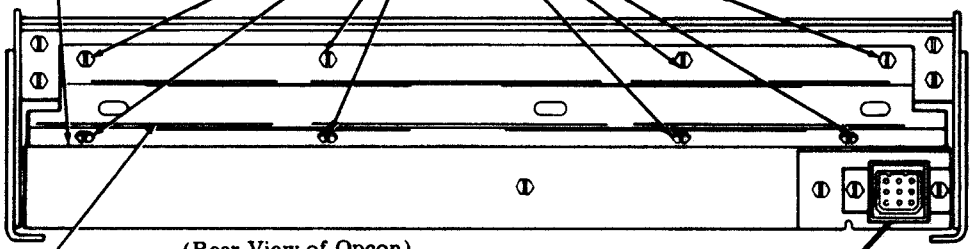

(Rear View of Opcon)

③ Remove plate.

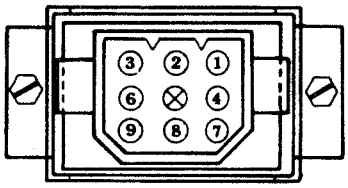

SSI Connector Orientation

④ Remove two 184056 screws; one from each side of frame.

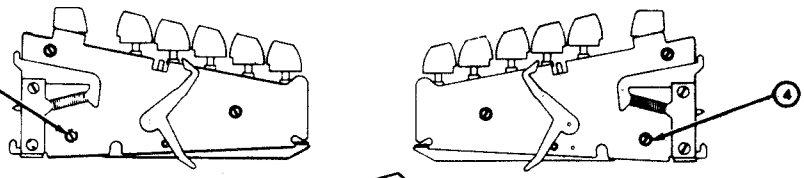

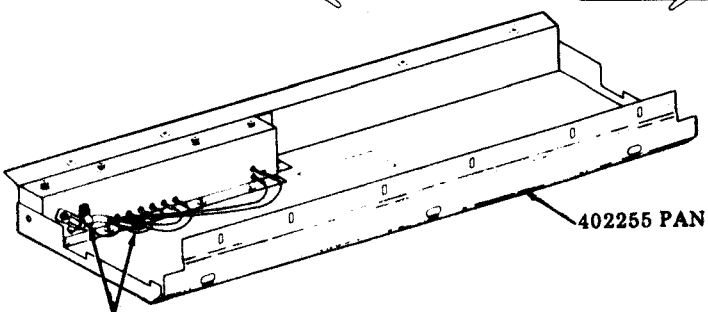

402255 PAN

⑥ Remove pan.

⑤ Remove push-on terminals of 408961 cable assembly.

Spacebar Mechanism

- Remove 401100 cover (6-36).
- Remove both control keytops (6-37).

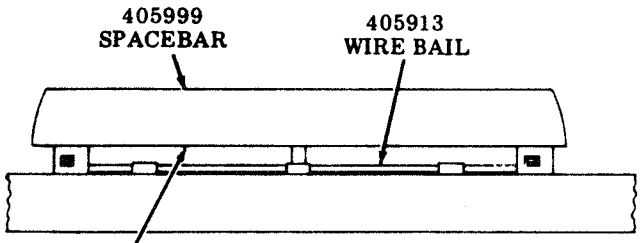

① Disengage 405913 wire bail from two snap clips formed out of top shield using a small screwdriver. Push bail to rear.

② With wire bail removed, push spacebar to right and upward to release spacebar from guides keyswitch assembly.

Keytops

To remove data keytops:

Place 346260 tool over the keytop and pull up to remove.

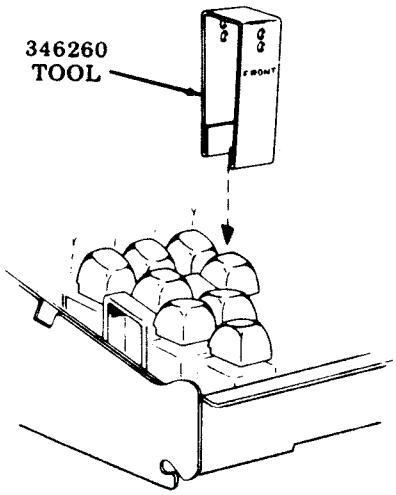

CAUTION 1: THE CAPS LOCK KEYTOP MUST BE IN THE FULLY EXTENDED, UNLATCHED POSITION BEFORE ATTEMPTING TO REMOVE THE KEYTOP. FAILURE TO OBSERVE THIS PRECAUTION WILL RESULT IN A DAMAGED KEYSWITCH.

To remove control keytops and blocking keytops:

① Grasp keytop using thumb and index finger.

② Exert upward force until keytop releases.

In reassembly of the blocking keytop for the CAPS LOCK switch only, operate the switch to the latched (down) position. For all other blocking keytops, position keytop over switch housing and snap down until ridges are retained by notches in switch body.

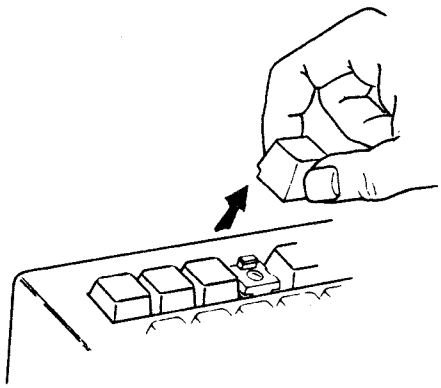

CAUTION 2: CONTROL ROW BLOCKING KEYTOPS ARE NOT THE SAME ON THE FRONT AND REAR SIDE AND MUST BE ASSEMBLED WITH THE PROPER ORIENTATION.

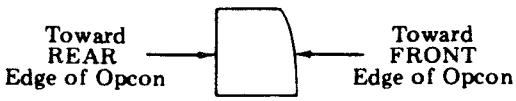

Profile of Control Row Blocking Keytop

C. OPCONS (Contd)

7. DISASSEMBLY/REASSEMBLY (Contd)

To remove new line keytop.

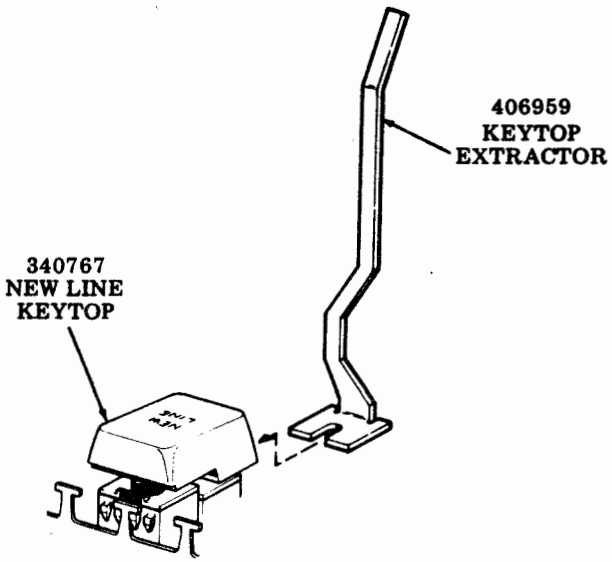

① Remove TAB keytop directly above the NEW LINE keytop.

② Insert the fork portion of the 406959 keytop extractor under the top edge of the keytop so that the tines of the extractor tool are around the metal post at the top of the keytop and the 340764 spring is depressed under the extractor tool.

③ Pry up with the extractor tool being sure the tines of the extractor tool pry against the metal plate embedded in the keytop. Pry up until keytop pops loose.

405906 Keytop Shield

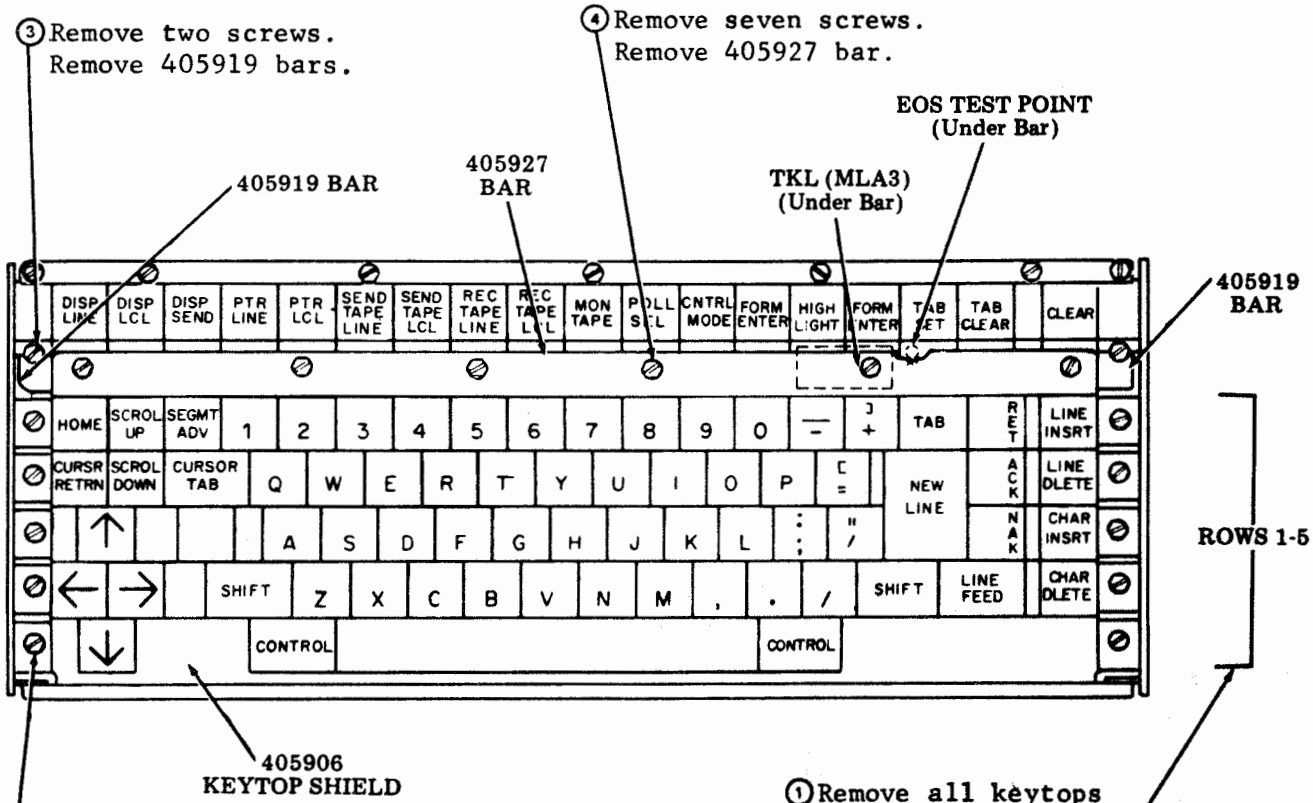

Keyswitches

- Remove 401100 cover (6-36).
- Remove 402255 pan (6-36).
- Remove keytops (6-37).
- Remove 405906 keytop shield (6-38).

② Place 346257 tool over keyswitch and press downward. When tool bottoms and embossed projections snap into notches on keyswitch, squeeze and pull back on tool to lift keyswitch out.

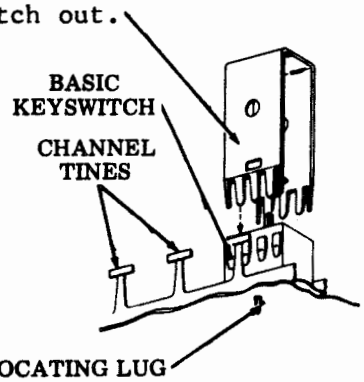

① Remove solder from around terminal pins of keyswitch to be removed.

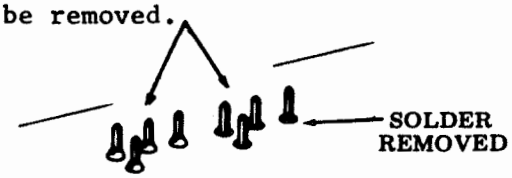

CAUTION: USE A LOW WATTAGE SOLDERING IRON (AVOID PROLONGED CONTACT WITH PINS) ALONG WITH A DESOLDERING TOOL TO PREVENT DAMAGE TO KEYSWITCH CARD CIRCUITS AND COMPONENTS.

NOTE: The tool tines must pass between keyswitch housing and inside of channel tines.

In reassembly, insert new keyswitch, observe position of locating lug, and press keyswitch into channel. Switch must snap fully into front and rear channel tines. Hold keyswitch in place and resolder.

405931 Cover Assembly

- Remove 402255 pan.

② Remove four 152893 screws, 110743 lockwashers and 125011 flat washers.

③ Remove 405931 cover assembly.

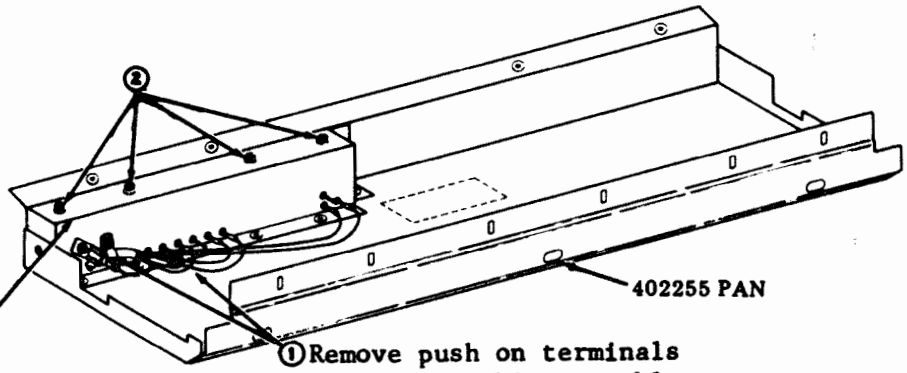

① Remove push on terminals of 408961 cable assembly.

④ Unsnap 401149 connector from mounting bracket.

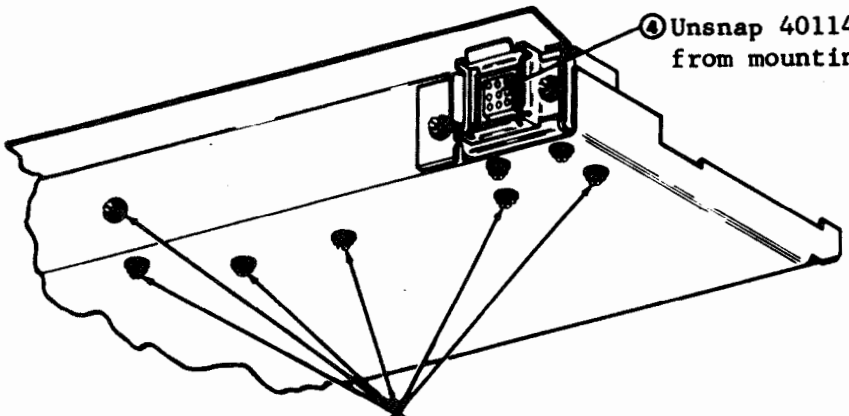

③ Remove six 152893 screws, 110743 lockwashers and 125011 flat washers.

C. OPCONS (Contd)

7. DISASSEMBLY/REASSEMBLY (Contd)

410566 Transformer and Filter Circuit Card

- Remove 402255 pan.
- Remove 405931 cover assembly.

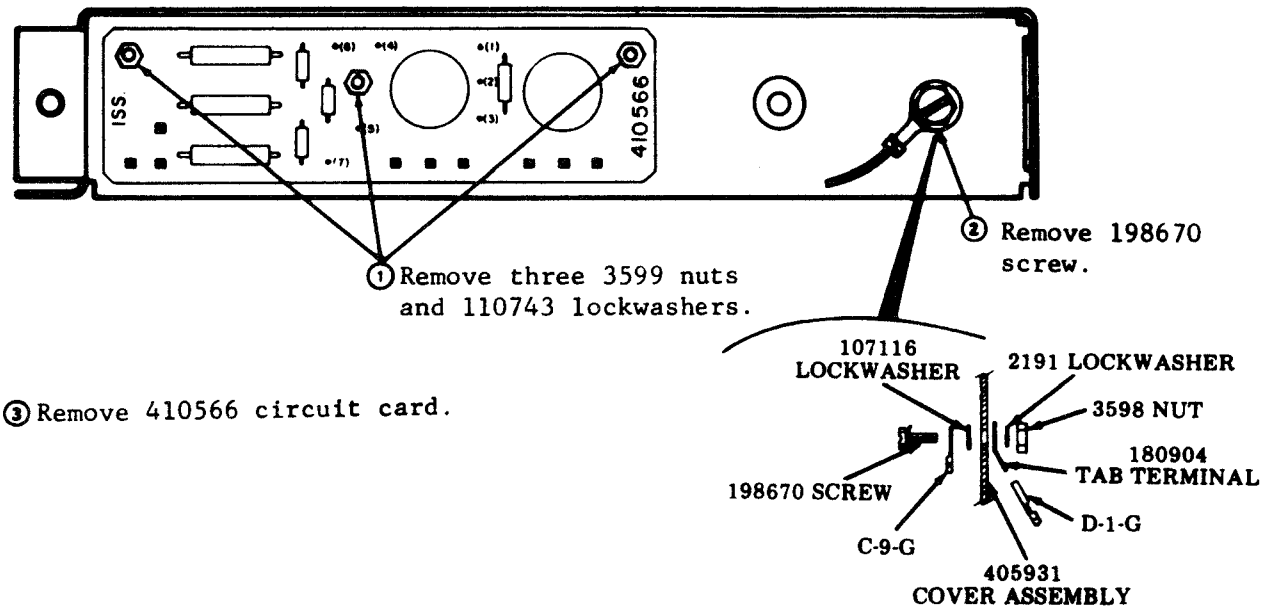

D. TRACTOR FEED PRINTER

1. REMOVAL AND REPLACEMENT OF ENTIRE PRINTER ASSEMBLY

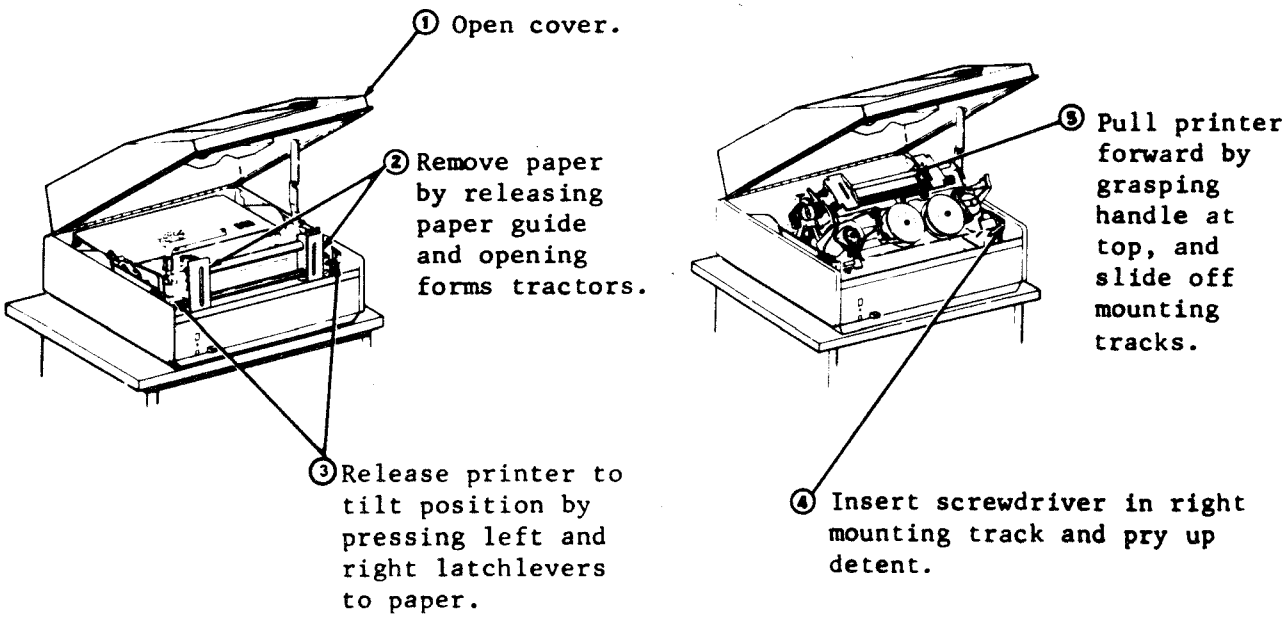

2. SUBASSEMBLY IDENTIFICATION

NOTE: The number indicated in parentheses after each assembly designates the page covering the disassembly/reassembly procedures.

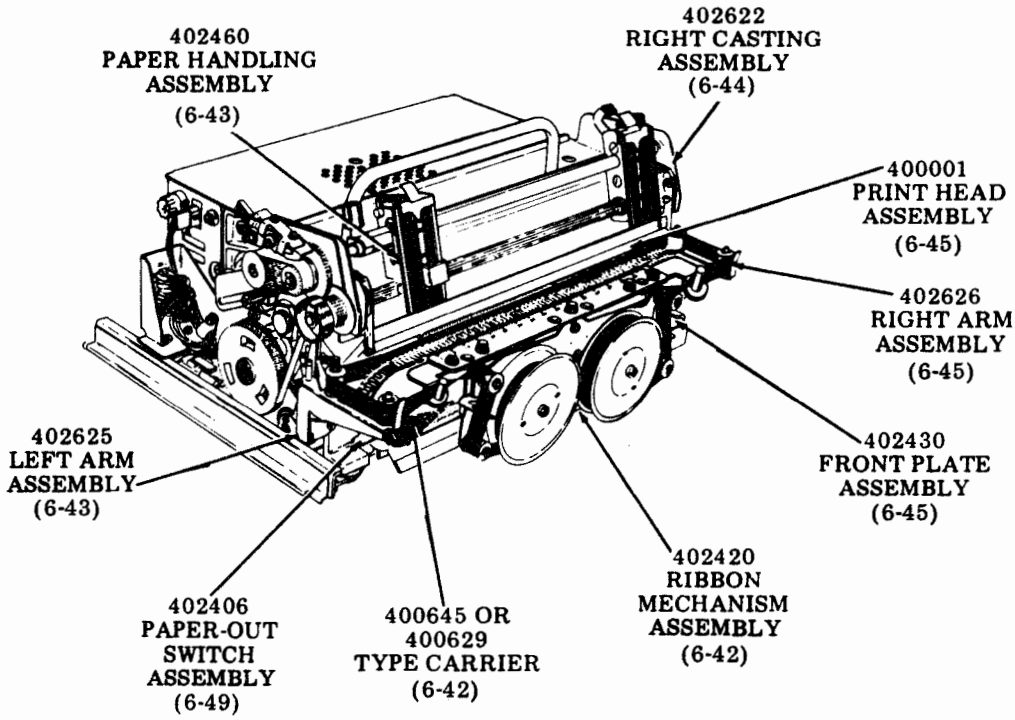

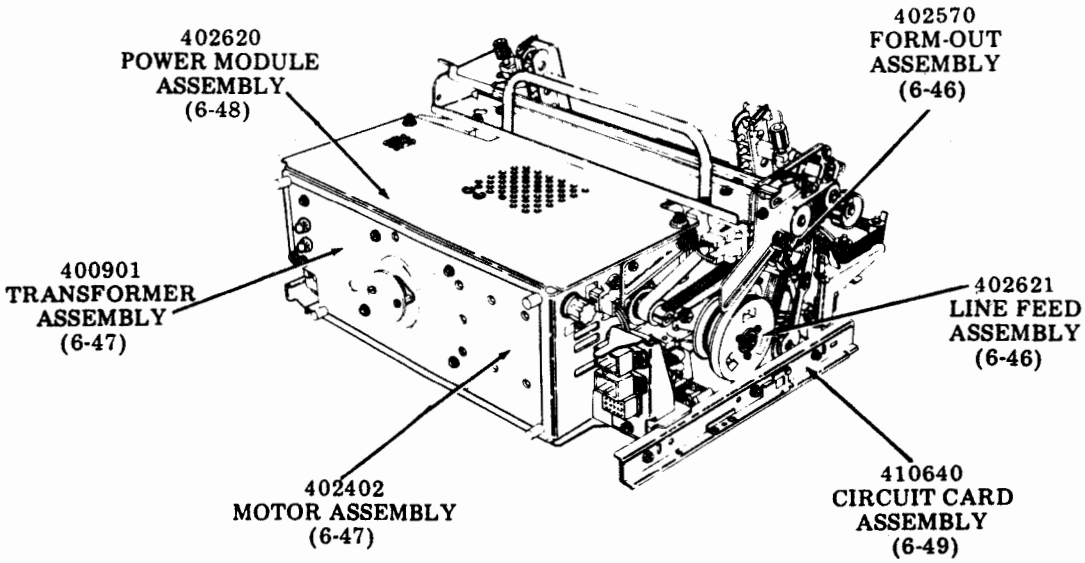

D. TRACTOR FEED PRINTER (Contd)

3. DISASSEMBLY/REASSEMBLY

402420 Ribbon Mechanism Assembly

① Remove 402444 ribbon (not shown).

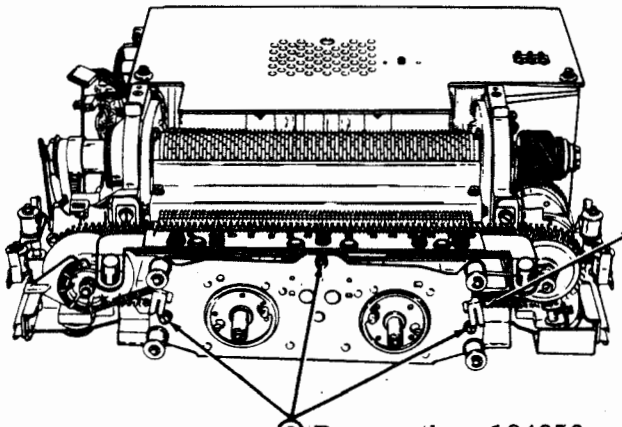

③ Move to right to remove 400630 belt.

② Remove three 184056 screws with lockwashers.

In reassembly, perform RIBBON FEED DRIVE BELT TENSION adjustment (5-12).

400645 Monocase or 400629 Up-Low Type Carrier

① Remove 402444 ribbon (not shown).

② Release thumb levers on left and right ribbon guide brackets allowing guides to spring to sides of printer.

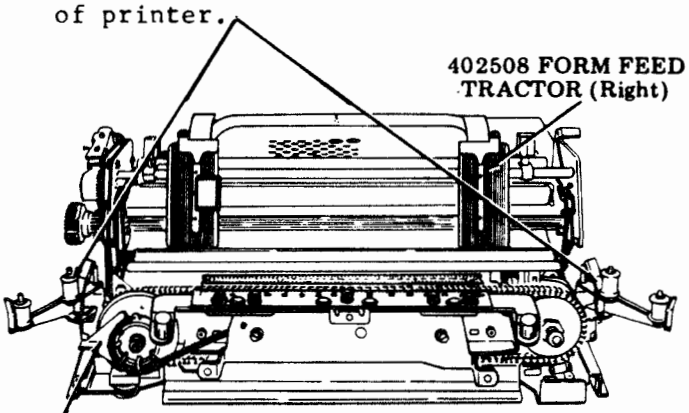

④ Flags should be to left and right of backup bar for ease of removal. Lift up arm on left type carrier pulley to release spring bias on pulley. While holding arm up, lift type carrier from right pulley and remove.

③ Remove three thumbscrews and lockwashers, then remove carrier top guide from over type carrier.

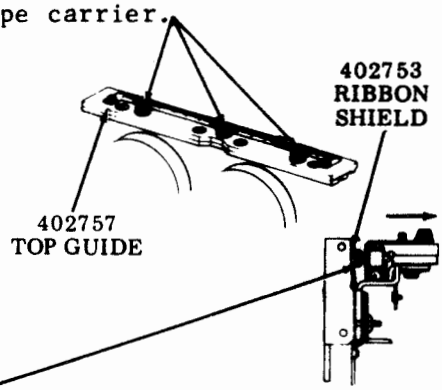

⑤ When replacing carrier top guide, make sure it is positioned to front. This insures that type carrier is positioned against backup bar.

CAUTION: WHEN REPLACING TYPE CARRIER, PLACE CARRIER ON THE LEFT PULLEY FIRST AND MAKE SURE ALL PALLET STEMS AT THE TOP OF BELT ARE LOCATED UNDER BACKUP BAR.

402625 Left Arm Assembly

- **Remove** 400645 or 400629 type carrier (6-42).

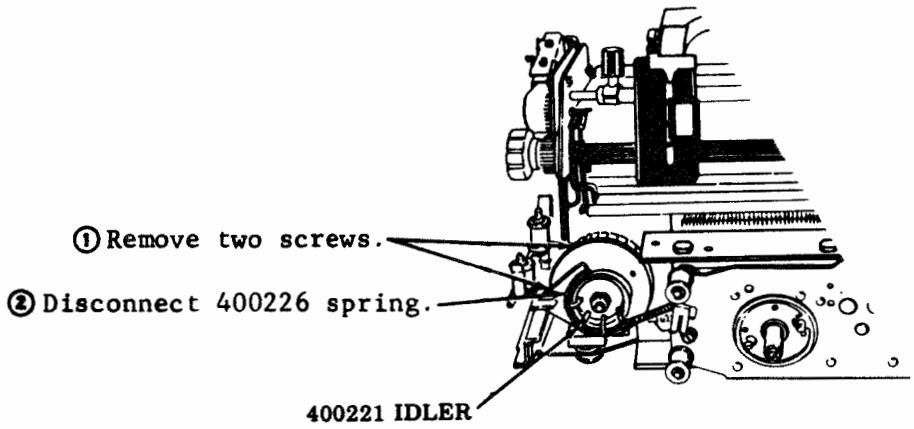

In reassembly, LEFT CARRIER SPROCKET adjustment (5-37) must be made.

402460 Paper Handling Assembly

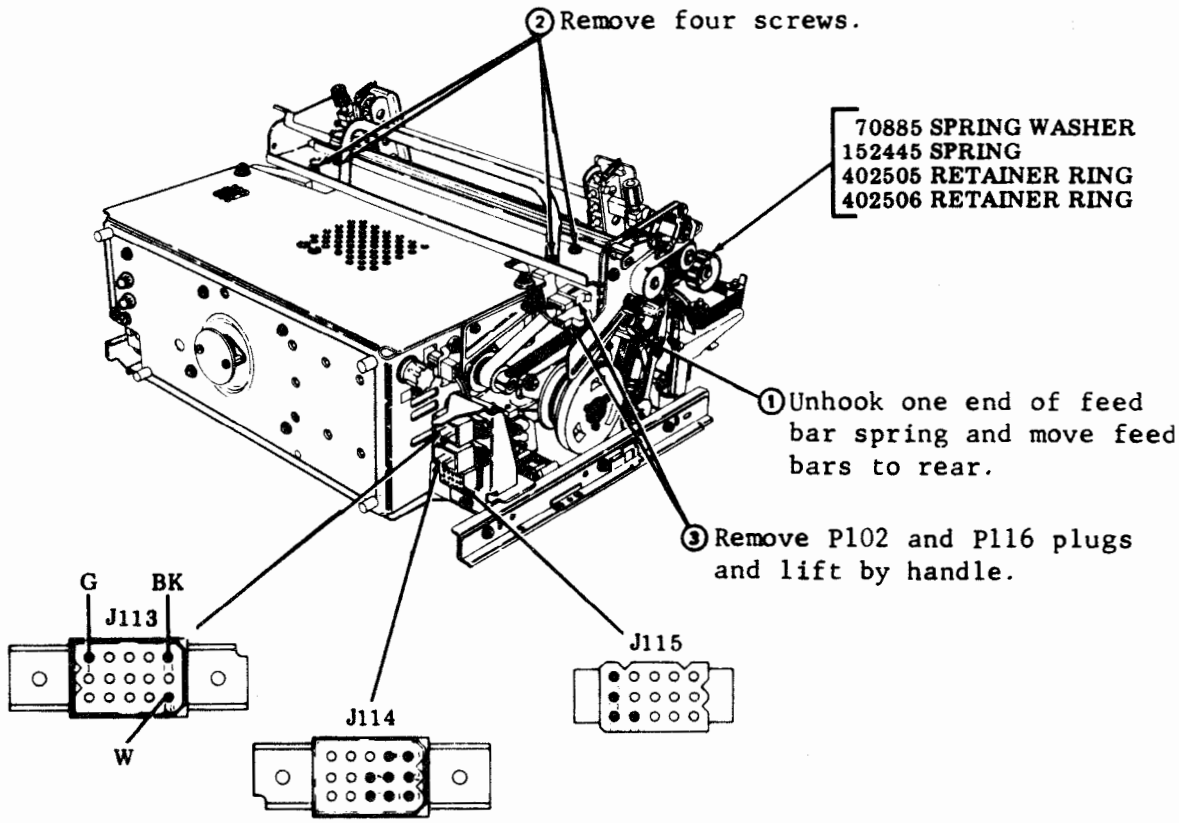

D. TRACTOR FEED PRINTER (Contd)

3. DISASSEMBLY/REASSEMBLY (Contd)

402622 Right Casting Assembly

- Remove 400645 or 400629 type carrier (6-42).
- Remove 410640 circuit card assembly (6-49).
- Remove 402430 front plate assembly (6-45).
- Remove 402460 paper handling assembly (6-43).
- Remove 402620 power module assembly (6-48).

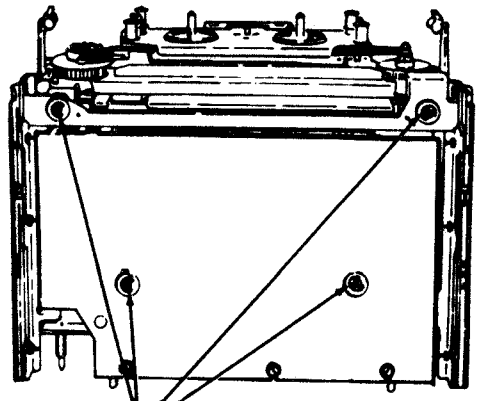

① Remove four retaining rings in order to remove printer base.

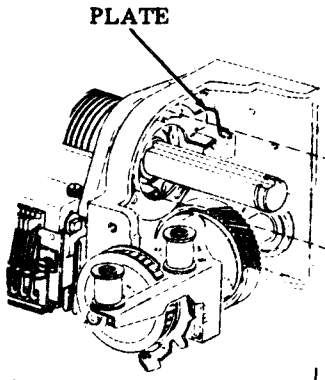

④ Unhook 110438 spring from post on sensor bracket.

BRACKET

⑤ Remove two 3599 nuts and 3640 lockwashers holding bracket to the plate. Remove bracket.

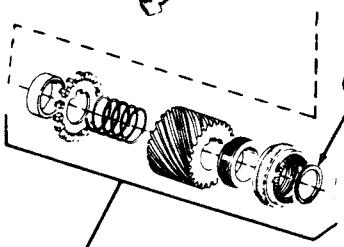

② Remove retaining ring from shaft.

③ Slide off adjusting ring, collar, gear, spring, timing wheel, and bushing from shaft.

⑥ Remove 3599 nut, 3640 lockwasher, and 125011 flat washer holding plate to post. Remove plate.

⑦ Loosen screw holding the sensor. Remove sensor.

⑧ Be careful not to lose 400931 spacer.

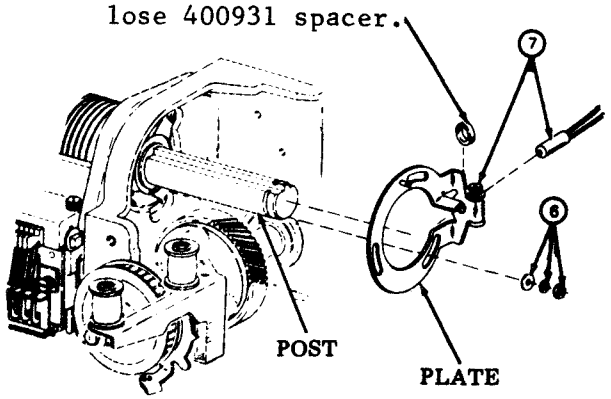

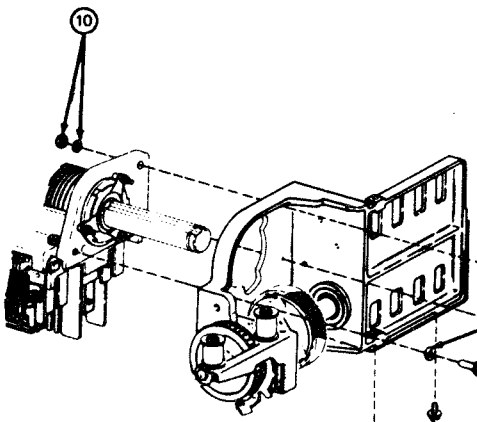

⑩ Remove 400293 shoulder screw, 2669 lockwasher, and 112626 nut; remove two 153442 screws and 45815 lockwashers; remove right casting assembly.

⑨ Remove two 184057 screws w/lockwashers holding bottom pan to casting.

400001 Print Head Assembly

- Remove 400645 or 400629 type carrier (6-42).
- Remove 410640 circuit card assembly (6-49).
- Remove 402430 front plate assembly (6-45).
- Remove 402622 right casting assembly (6-44).

② Remove two 153442 screws, 45815 lockwashers, 400317 post, and 45815 lockwasher. Remove 400001 print head assembly.

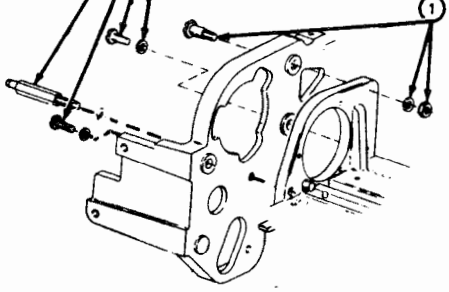

① At left casting, remove 400923 shoulder screw, 2669 lockwasher, and 112626 nut.

NOTE: It is suggested that when the right casting is removed, a 3-inch piece of wood be placed under the right end of the print head to keep it from dropping.

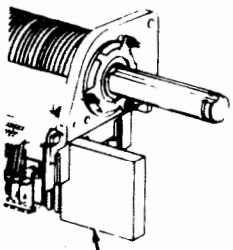

In reassembly, perform 402622 Right Casting Assembly (6-44), 402430 Front Plate Assembly (6-45), 410640 Circuit Card Assembly (6-49), and 400645 or 400629 Type Carrier (6-42) procedures. Perform RIBBON FEED DRIVE BELT TENSION adjustment (5-12).

402626 Right Arm Assembly

① Remove 402444 ribbon (not shown).

③ Remove post -- being careful of two springs mounted on post.

② Remove two retaining rings.

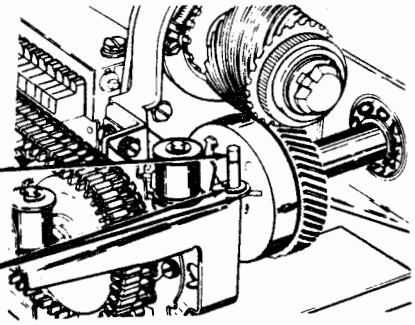

402430 Front Plate Assembly

- Remove 400645 or 400629 type carrier (6-42).

① Remove four mounting screws.

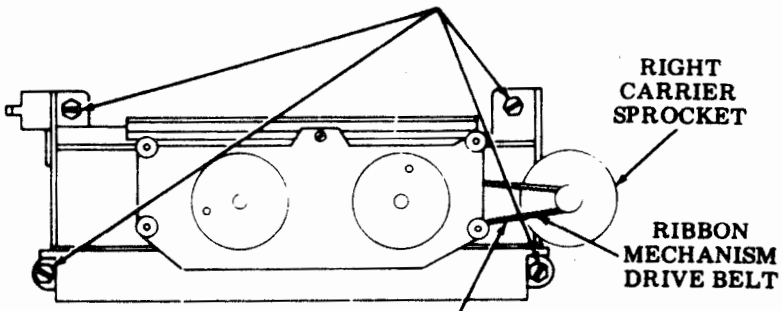

② Move assembly to right to remove ribbon mechanism drive belt.

CAUTION: DO NOT LOSE FOUR SPACERS.

In reassembly, make Ribbon FEED DRIVE BELT TENSION adjustment (5-12).

D. TRACTOR FEED PRINTER (Contd)

3. DISASSEMBLY/REASSEMBLY (Contd)

402570 Form-Out Assembly

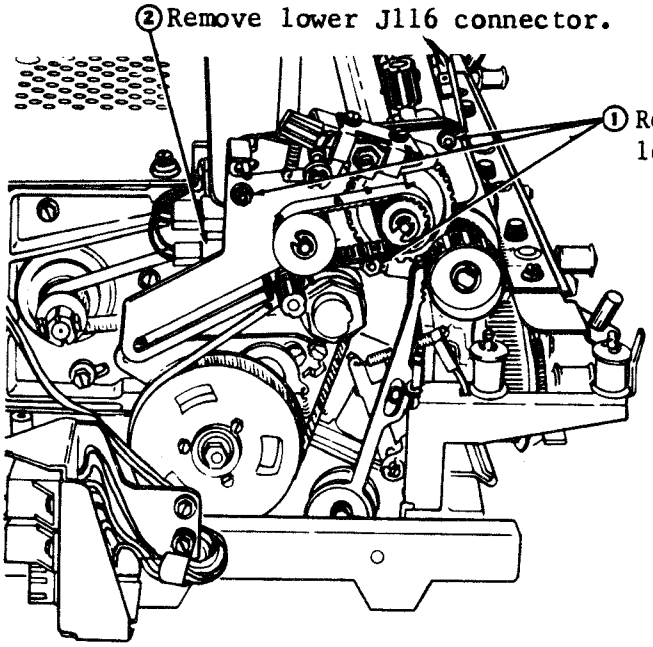

In reassembly, remake FORM-OUT GEAR BACKLASH adjustment (5-48).

Form-Out Belt Selection

Form Selector Setting				Color of Belt	TP Part No.
4	3	2	1		
Length of Form, Inches					
3-1/3**	2-1/2	5	10	Amber	402571
3-2/3**	2-3/4¶	5-1/2	11	Blue	402572
4	3	6	12	Yellow	402573
4-1/3**	3-1/4¶	6-1/2	13	Brown	402574
4-2/3**	3-1/2	7	14	Red	402575
5	3-3/4¶	7-1/2	15	Pink	402576
5-1/3**	4	8	16	Lt Green	402577
5-2/3**	4-1/4¶	8-1/2	17	Green	402578
6	4-1/2	9	18	Lt Blue	402579
7-1/3**	5-1/2	11	22	White	402580

¶ These settings are not used on 6 line per inch printers.
** These settings are not used on 8 line per inch printers.

402621 Line Feed Assembly

- Remove 402570 form-out assembly (6-46).

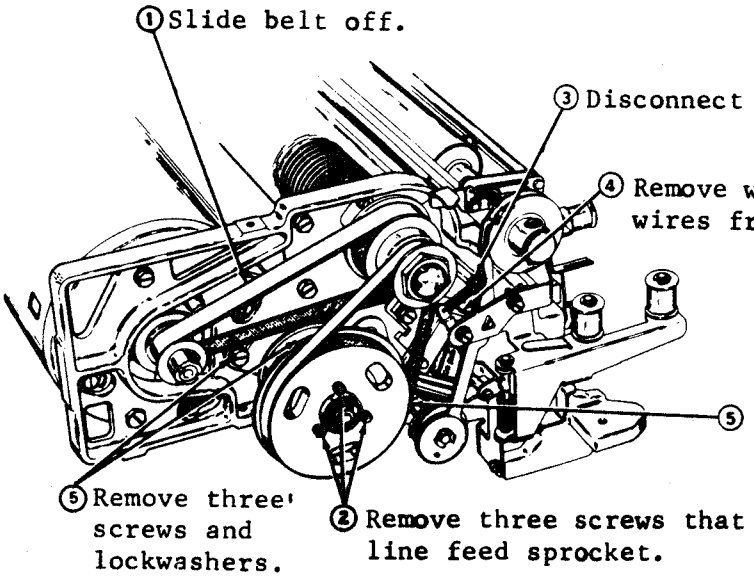

In reassembly, LINE FEED BAR ECCENTRIC AND DRIVE BELT TENSION adjustment (5-18) must be made.

402402 Motor Assembly

- Remove 402460 paper handling assembly(6-43).
- Remove 402620 power module assembly(6-48).

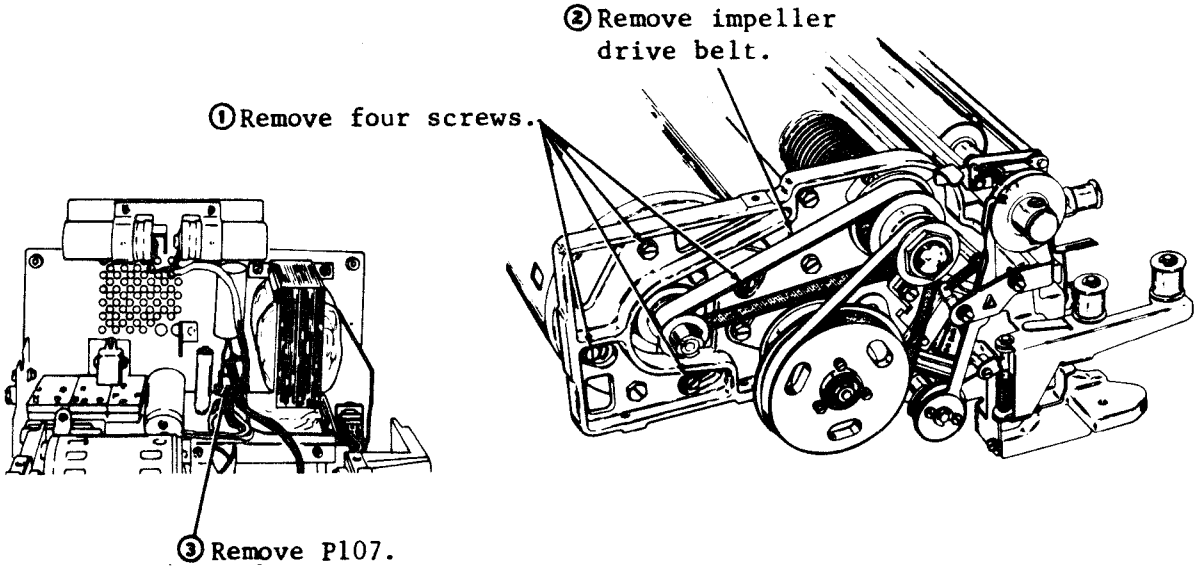

In reassembly, make IMPELLER SHAFT DRIVE BELT TENSION adjustment (5-12).

400901 Transformer Assembly

- Remove 402460 paper handling assembly (6-43).
- Remove 402620 power module assembly (6-48).

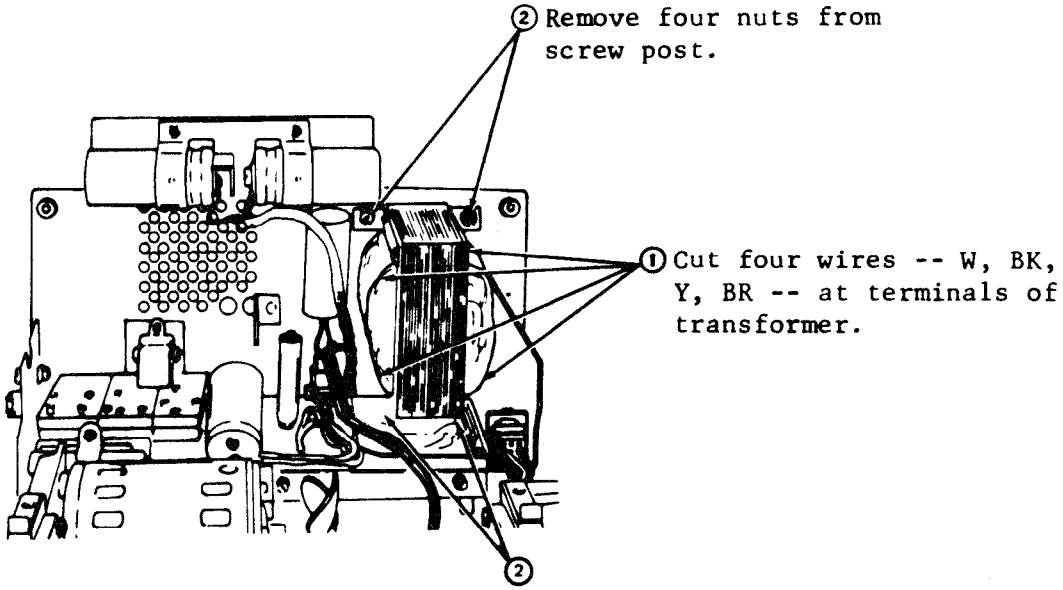

NOTE: When installing a new transformer, the four wires must be soldered to its terminals -- W to 1, BK to 2, Y to 3, BR to 4.

D. TRACTOR FEED PRINTER (Contd)

3. DISASSEMBLY/REASSEMBLY (Contd)

402620 Power Module Assembly

- Remove 410640 circuit card assembly (6-49).
- Remove 402460 paper handling assembly (6-43).

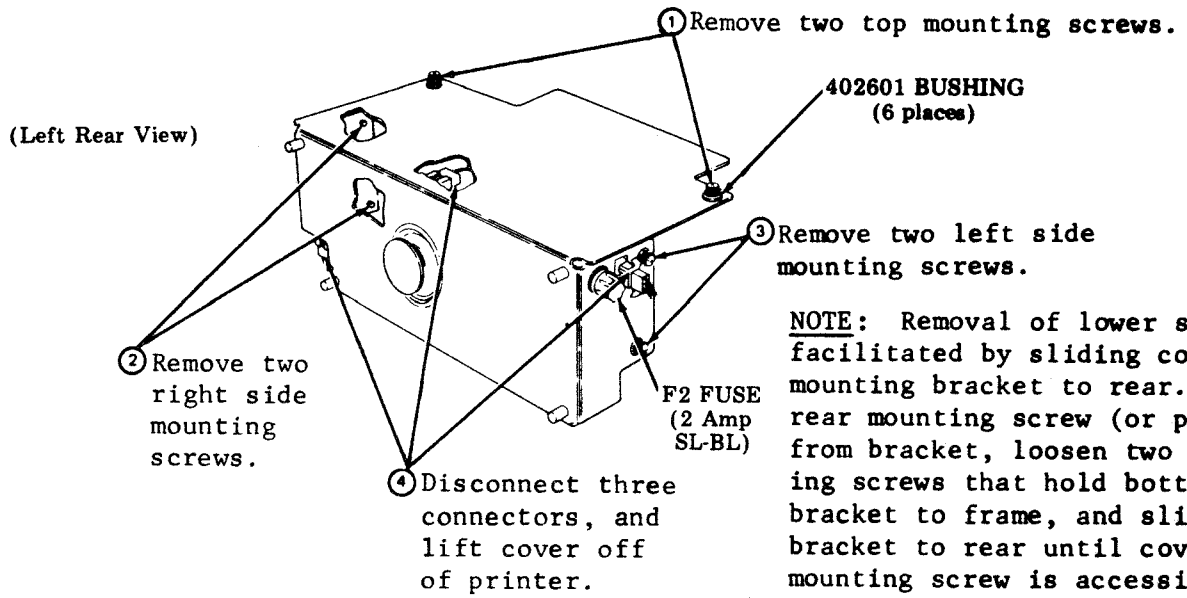

NOTE: Removal of lower screw is facilitated by sliding connector mounting bracket to rear. Remove rear mounting screw (or post) from bracket, loosen two mounting screws that hold bottom of bracket to frame, and slide bracket to rear until cover mounting screw is accessible.

To reassemble, reverse the disassembly procedures.

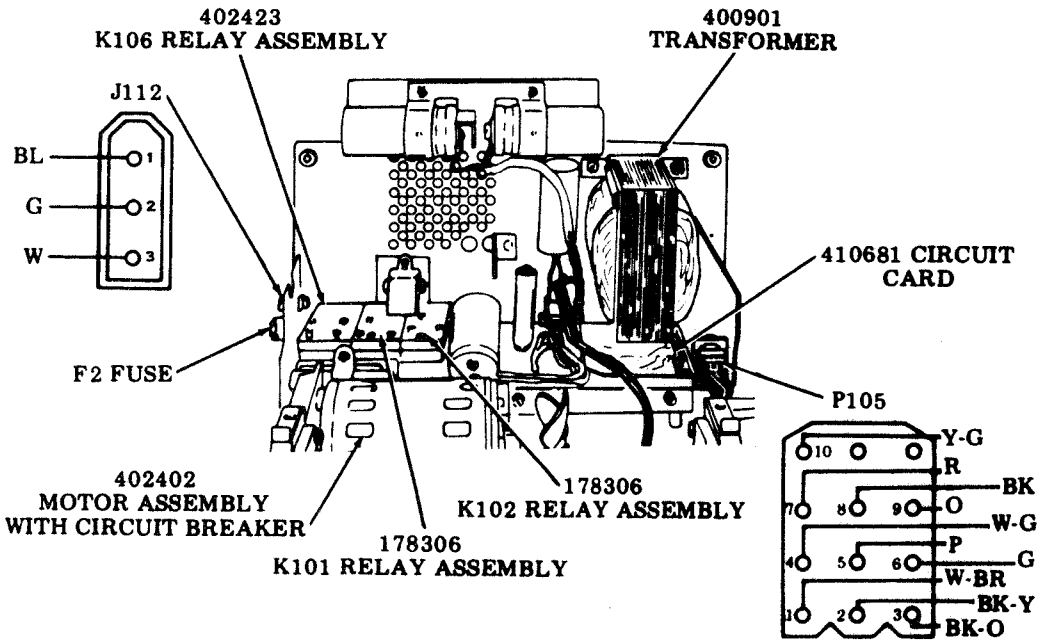

410640 Circuit Card Assembly

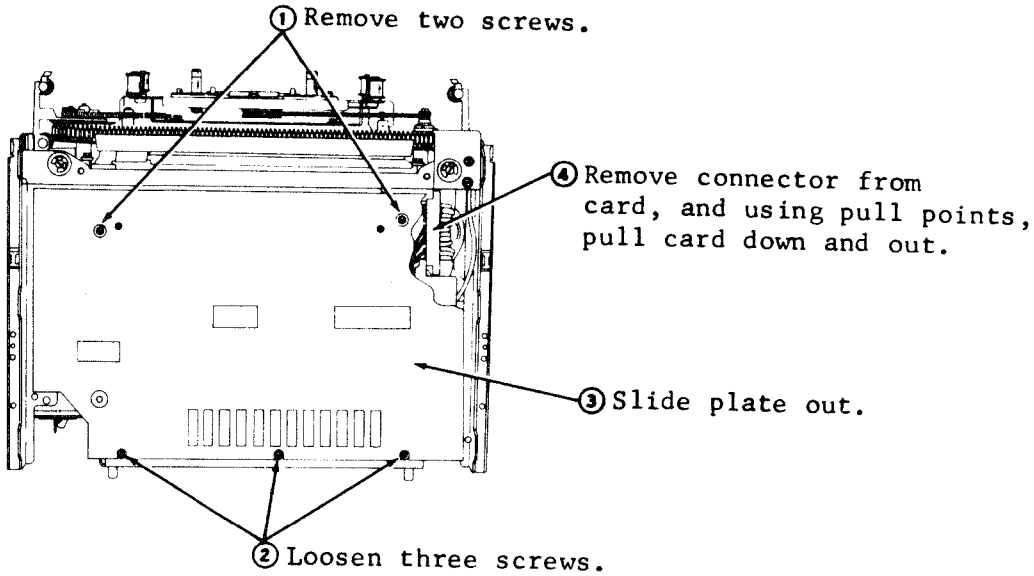

402406 Paper-Out Switch Assembly

Remove front mounting screw on paper-out switch assembly. Slide switch out.

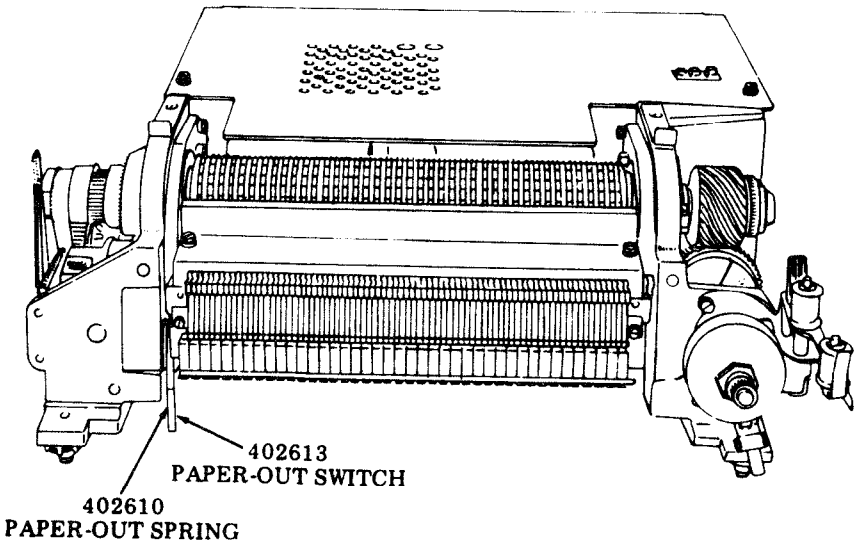

E. FRICTION FEED PRINTER

1. REMOVAL AND REPLACEMENT OF ENTIRE PRINTER ASSEMBLY

NOTE: The 410640 circuit card can be removed when printer is in maintenance position.

① Open cover.

② Disconnect P106 interlock cable connector.

③ Remove paper roll.

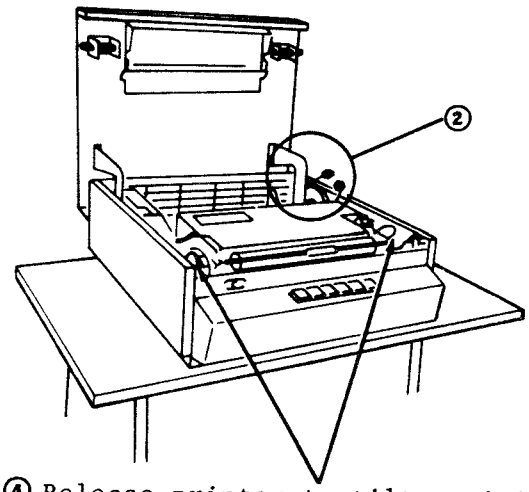

④ Release printer to tilt position by depressing left and right release levers.

⑦ Release (push in) printer slide detents and pull printer out by grasping it by the frame (front bottom).

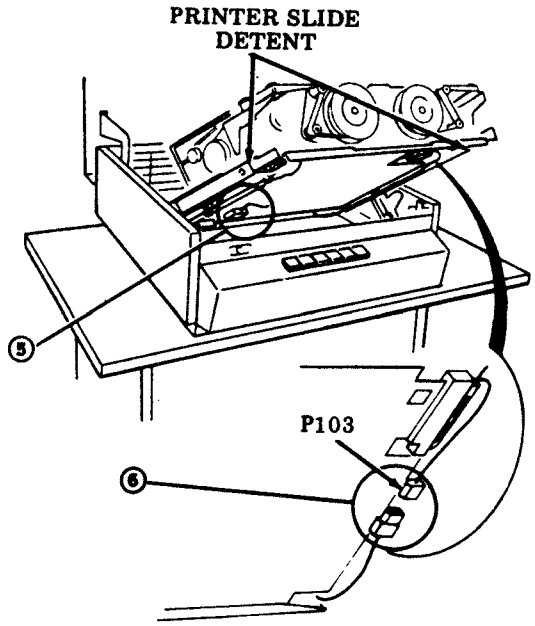

⑤ Disconnect 115 V ac J100 connector.

⑥ Disconnect SSI cable from printer cable.

To install printer reverse removal procedures.

2. SUBASSEMBLY IDENTIFICATION

NOTE: The number indicated in parentheses after each assembly designates the page covering the disassembly/reassembly procedures.

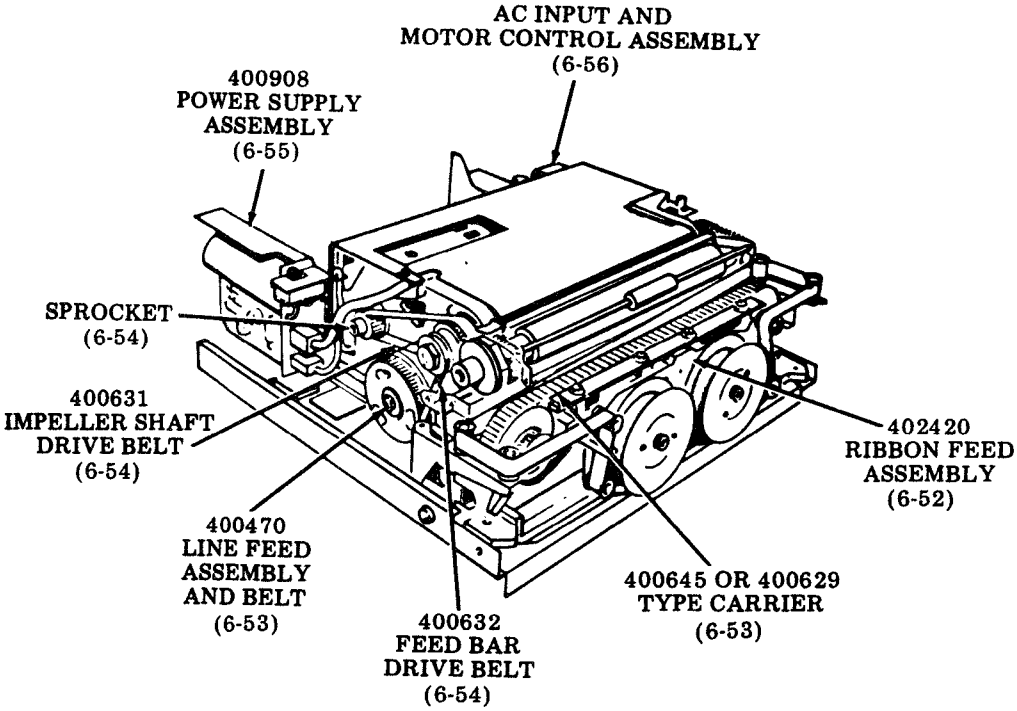

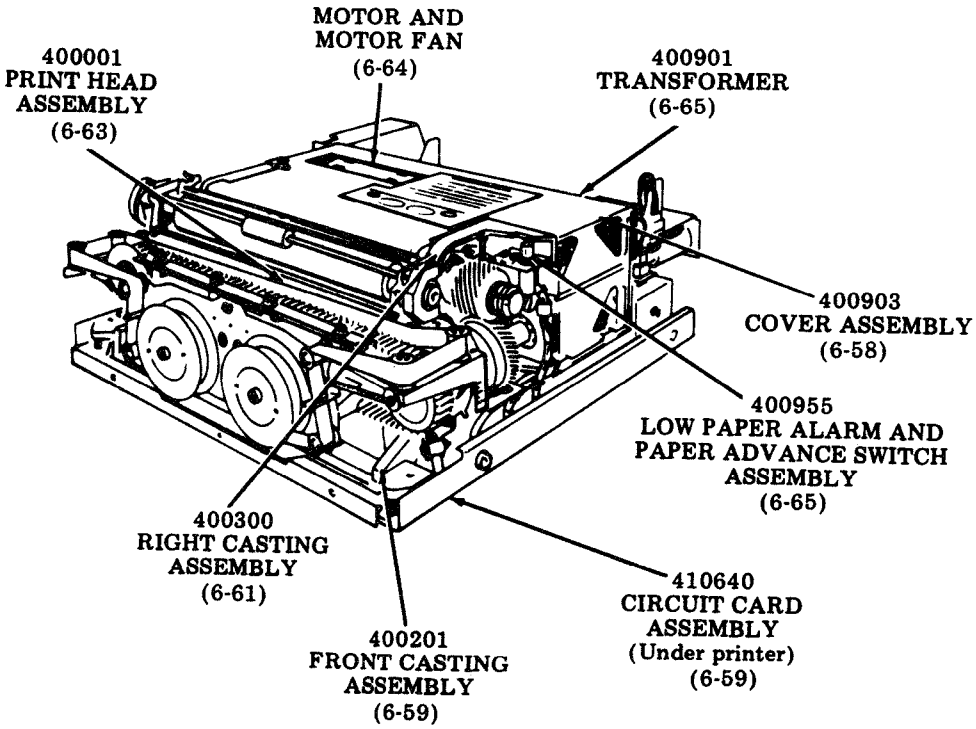

E. FRICTION FEED PRINTER (Contd)

3. DISASSEMBLY/REASSEMBLY (Contd)

402420 Ribbon Feed Assembly

① Remove 402444 ribbon (not shown).

④ Slide 402420 ribbon feed assembly to right to remove 400630 belt.

⑤ Move assembly to left to clear right pulley and remove.

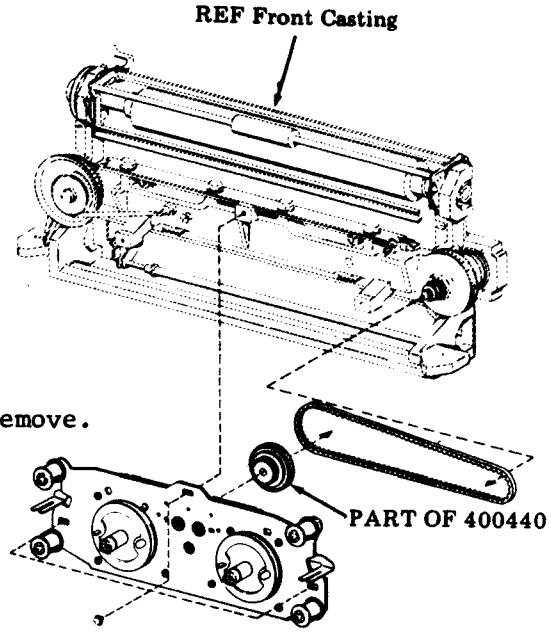

② Remove three 184056 screws w/lockwashers.

(Front View)

③ Remove 402420 ribbon feed assembly.

In reassembly, perform RIBBON FEED DRIVE BELT TENSION adjustment (5-12).

Spring replacement:

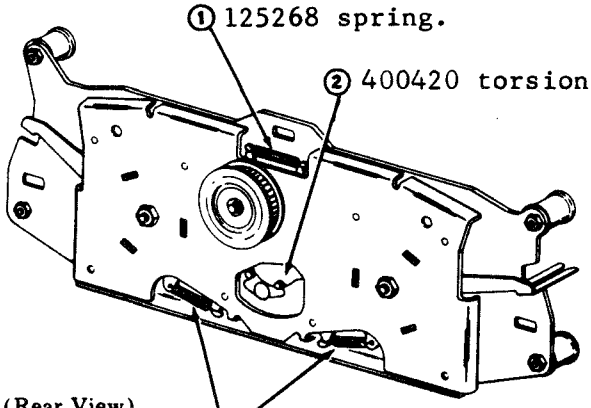

① 125268 spring.

② 400420 torsion spring.

(Rear View)

③ 2836 sensing arm spring.

Roller replacement:

② 2247 flat washer behind roller on early design units.

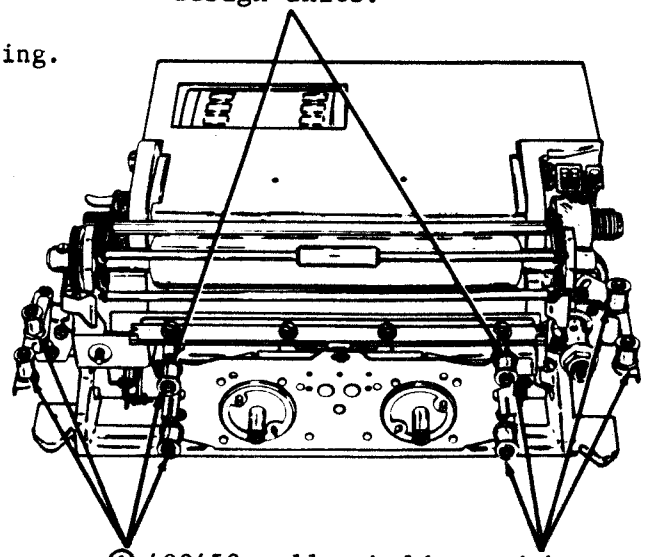

① 400450 roller held on with 119651 retainer ring.

400645 Monocase or 400629 Up-Low Type Carrier

③ Loosen thumbscrew on right ribbon guide bracket and swing guide to right.

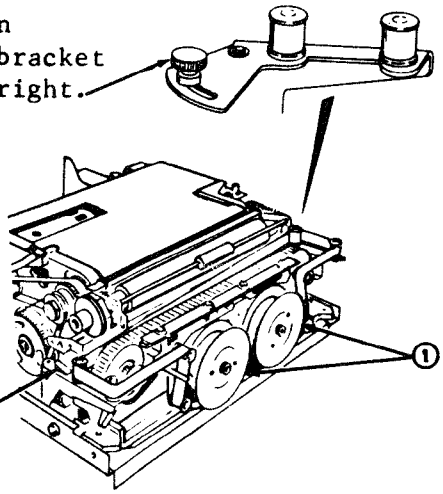

② Release thumb lever on left ribbon guide bracket allowing guide to spring to left.

① Remove 402444 ribbon.

④ Lift up arm on left type carrier pulley to release spring bias on pulley. While holding arm up, lift type carrier from right pulley and remove.

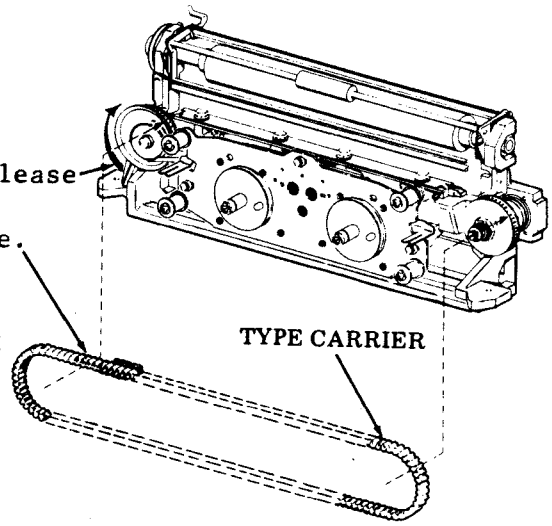

CAUTION: WHEN REPLACING THE TYPE CARRIER, PLACE THE CARRIER ON THE LEFT PULLEY FIRST AND MAKE SURE ALL THE PALLET STEMS AT THE TOP OF THE BELT ARE LOCATED UNDER THE BACKUP BAR.

400470 Line Feed Assembly and Belt

① Slide 400634 clutch drive belt off. Replace if worn.

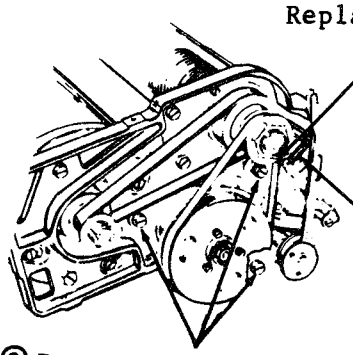

② Remove 41385 spring.

③ Remove one 153442 screw, three 45815 lockwashers, three 41663 flat washers, and two 173974 screws.

④ Carefully separate 400470 line feed assembly from casting. Do not move line feed assembly too far away from printer. Move assembly just enough to disconnect two wires attached to coil, and then remove assembly.

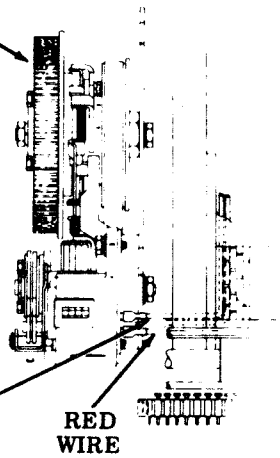

NOTE: When reassembling, connect red wire to front terminal of magnet; slate wire to rear terminal (as viewed from front of printer). Cut cable tie for ease of reassembly.

In reassembly, perform CLUTCH DRIVE BELT TENSION adjustment (5-13).

E. FRICTION FEED PRINTER (Contd)

3. DISASSEMBLY/REASSEMBLY (Contd)

400632 Feed Bar Drive Belt

Remove 400470 line feed assembly and belt (6-53).

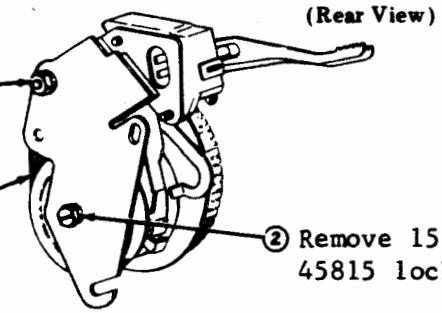

In reassembly, perform LINE FEED BAR ECCENTRIC AND DRIVE BELT TENSION adjustment (5-18), then perform CLUTCH DRIVE BELT TENSION adjustment (5-13).

400631 Impeller Shaft Drive Belt

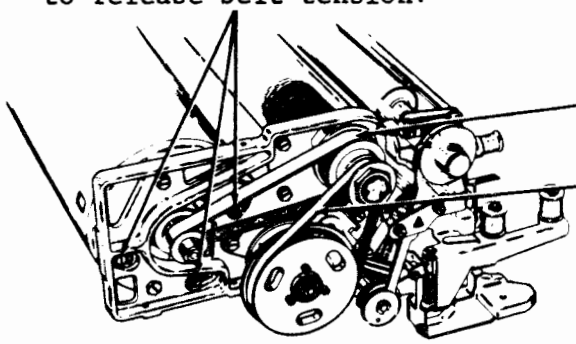

In reassembly, perform IMPELLER SHAFT DRIVE BELT TENSION adjustment (5-12). Check CLUTCH DRIVE BELT TENSION adjustment (5-13).

Sprocket

- Remove 400631 impeller shaft drive belt (6-54).

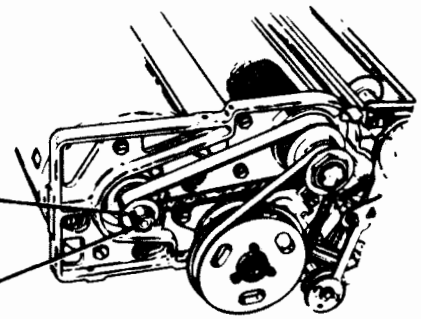

In reassembly, perform IMPELLER SHAFT DRIVE BELT TENSION adjustment (5-12). Check CLUTCH DRIVE BELT TENSION adjustment (5-13).

400908 Power Supply Assembly

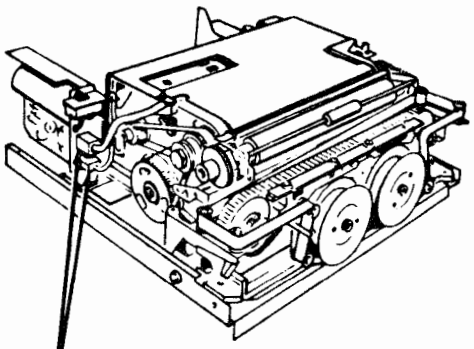

① Unplug P108 and P109 connectors at front of 400908 power supply assembly.

NOTE: Removal of 410681 circuit card does not require disassembly of the power supply.

② Slide card out of 400926 J111 connector.

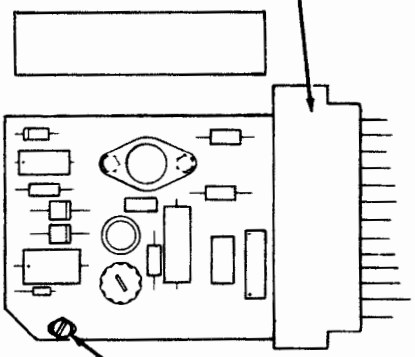

① Remove circuit card mounting screw.

② Remove 153484 screws and 107116 lockwashers from terminals 1 (WHITE-BLUE lead) and 3 (WHITE-BLACK lead) on relay.

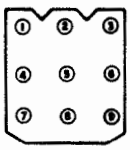

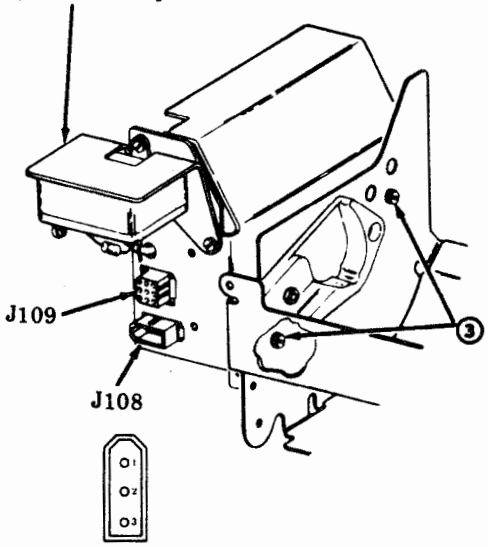

③ Remove two 184056 screws w/lockwashers. Remove 400908 power supply assembly and replace.

In reassembly, make sure the WHITE-BLACK lead is on terminal 3 and WHITE-BLUE is on terminal 1.

E. FRICTION FEED PRINTER (Contd)

3. DISASSEMBLY/REASSEMBLY (Contd)

AC Input and Motor Control Assembly

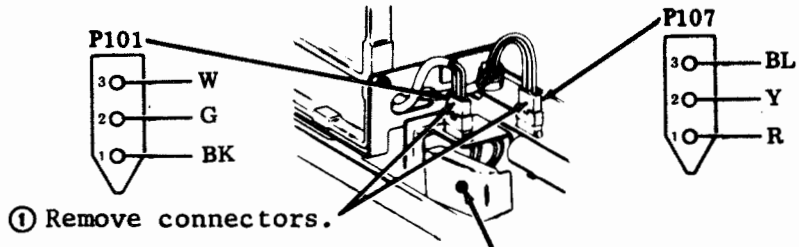

① Remove connectors.

② Remove 181241 screw w/lockwasher from relay cover. Remove cover.

400905 AC Input and Motor Control Assembly (Early Design)

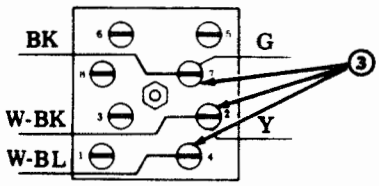

③ Remove 153484 screws from motor control relay at terminals 4, 2, and 7 to disconnect leads.

Motor Control Relay

④ Remove 151631 screw, 2191 lockwasher, and 7002 flat washer from cable clamp to loosen cable.

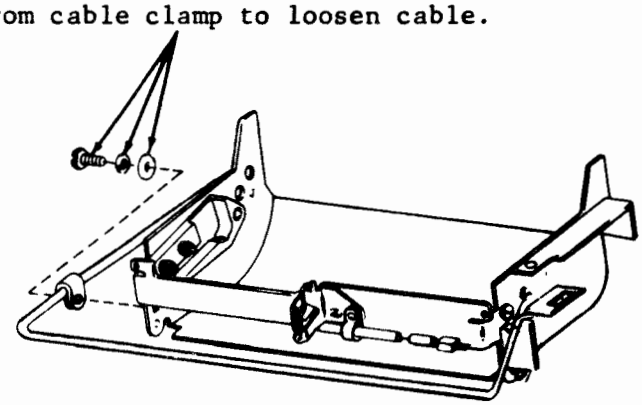

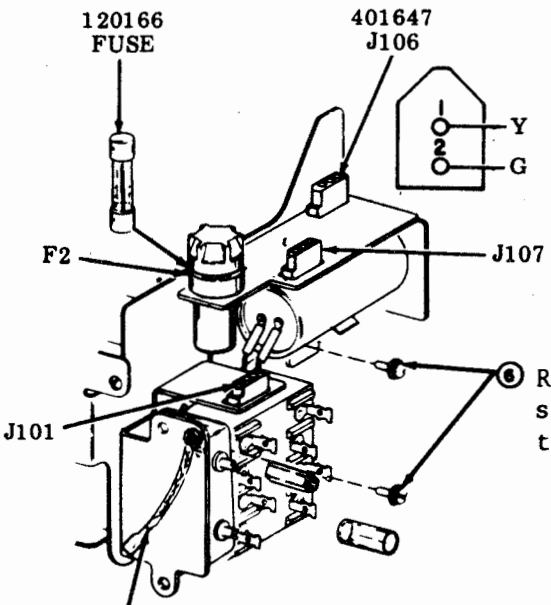

⑥ Remove 184055 screw w/lockwasher securing 400905 motor control assembly to paper container. Remove assembly.

⑤ Disconnect ground strap from base.

NOTE: If it becomes necessary to replace the early design 400905 motor control assembly, order 402618 modification kit.

In reassembly, make sure that the right color leads are mounted to the proper terminals on the relay, and the right connectors are mounted to their receptacles.

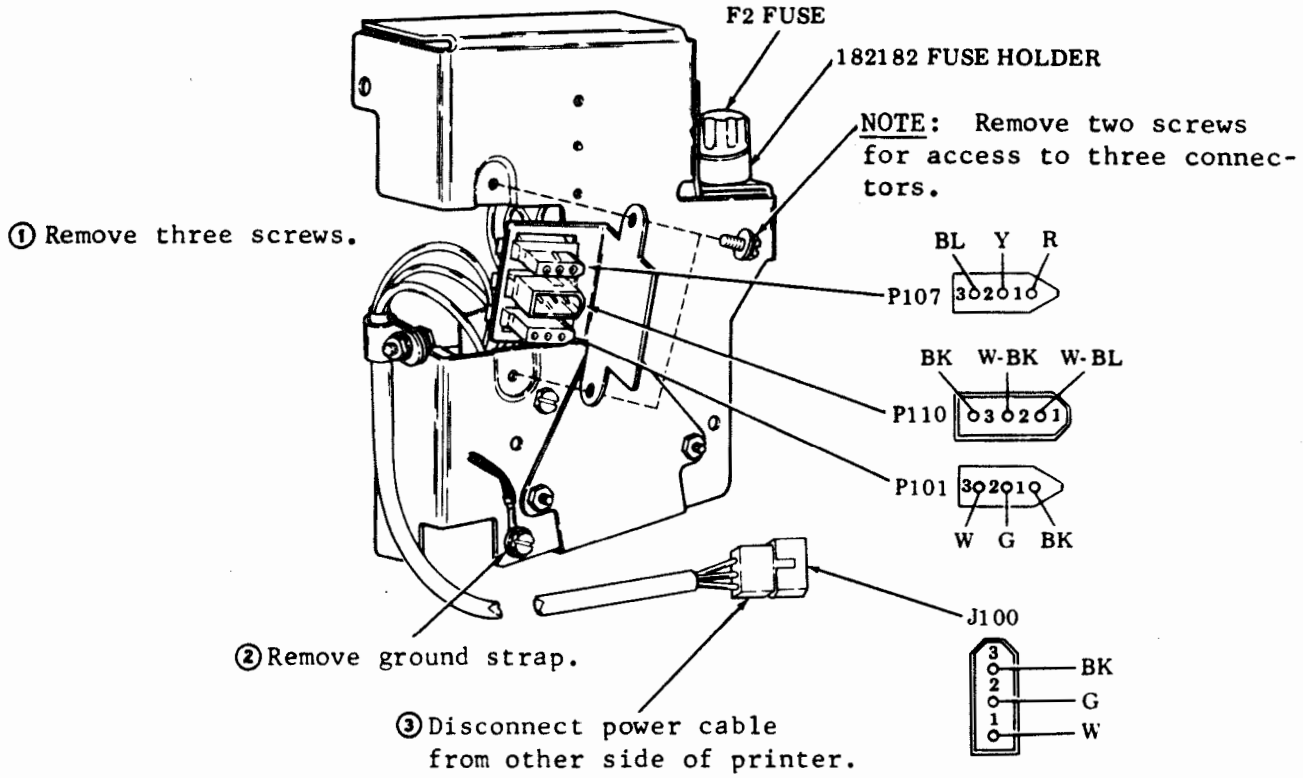

400960 AC Input and
Motor Control Assembly
(Intermediate Design)

CAUTION: SEVERAL MOTORS AND AC INPUT AND MOTOR CONTROL ASSEMBLIES HAVE BEEN USED IN FRICTION FEED PRINTERS. THE MOTORS AND AC INPUT AND MOTOR CONTROL ASSEMBLIES ARE NOT INTERCHANGEABLE.

	EARLY DESIGN†	INTERMEDIATE DESIGN	LATE DESIGN
Motor	400270	400270	402402
AC Input and Motor Control Assembly	400905	400960	402632

†Install 402618 modification kit to upgrade to intermediate design.

E. FRICTION FEED PRINTER (Contd)

3. DISASSEMBLY/REASSEMBLY (Contd)

400903 Cover Assembly

① Remove four 184057 screws w/lock-washers and 400586 clamp that secure the cover to the castings.

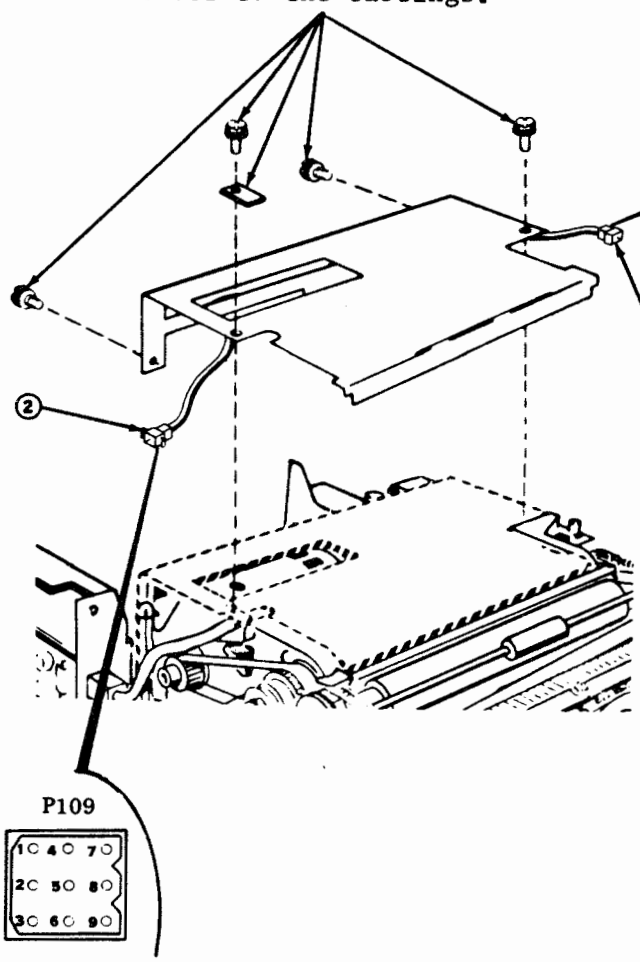

② Lift up cover and unplug connectors from receptacles. Remove cover.

③ For replacement of 318835 transistor located on back of cover, use the following illustration, and note location of parts.

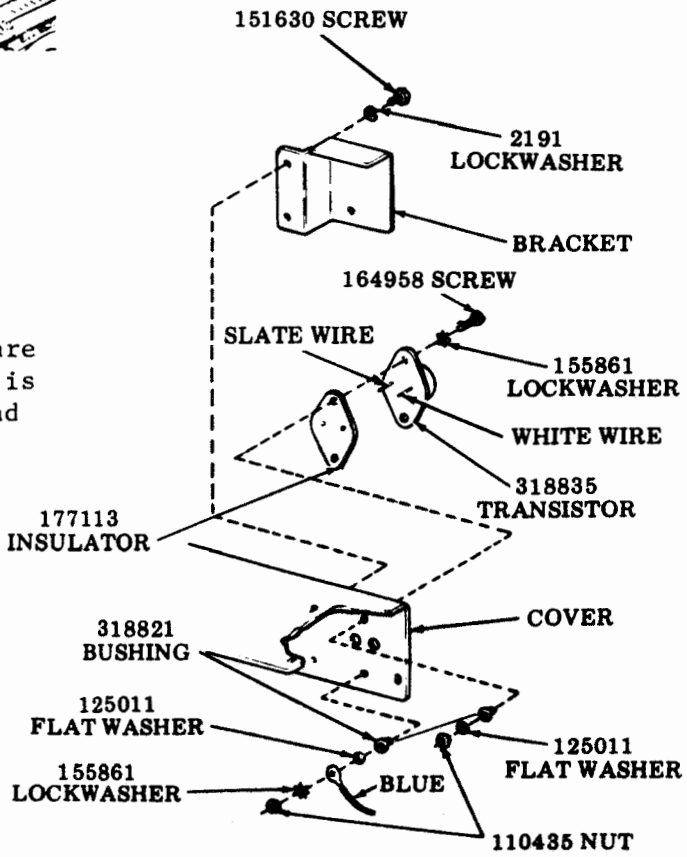

In reassembly, make sure all wires are mounted and 402640 thermal compound is applied to the bases of insulator and transistor.

410640 Circuit Card Assembly

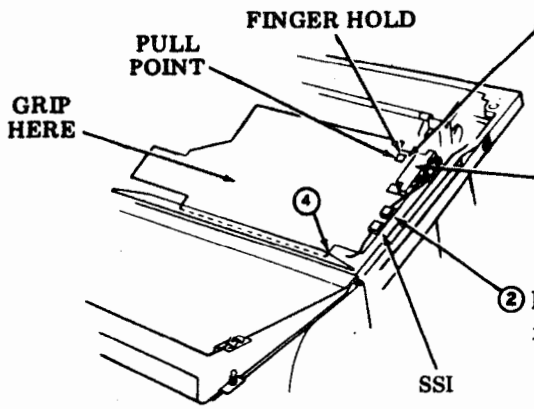

③ Using finger hold and a firm grip of card edge on opposite side as shown, use an even pulling force and unplug 410640 card from two rows of magnet assembly contacts.

④ Carefully lift bottom edge of card out from metal channel and unplug J3 connector from edge contacts of card. Remove card.

② Disconnect P103 printer cable connector from 400921 SSI connector.

① With printer in the ribbon changing or maintenance position, remove two screws that secure paper chute to bottom of printer and allow chute to hinge down.

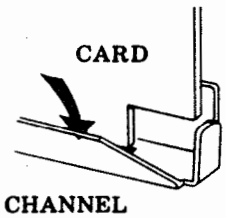

NOTE: During reassembly, make certain that the J3 connector is plugged onto the card and that the card is located within the channel before plugging it into the two rows of magnet assembly contacts. Apply slight pressure at both ends and middle of card to fully seat it on magnet contacts.

400201 Front Casting Assembly

- Remove 400645 or 400629 type carrier (6-59).
- Remove 402420 ribbon feed assembly (6-52).
- Remove 410640 circuit card assembly (6-59).

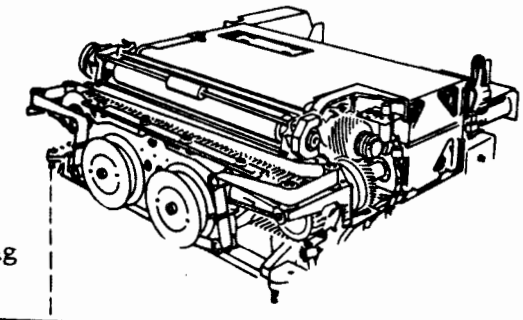

② Remove two 400406 screws, 400402 bushing isolators, and 2669 lockwashers from rear of printer base. Remove base.

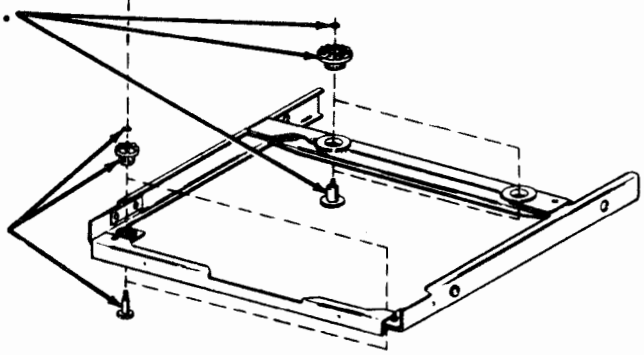

① Remove two 400405 screws, 338728 bushing isolators, and 3646 lockwashers from front of printer base.

E. FRICTION FEED PRINTER (Contd)

3. DISASSEMBLY/REASSEMBLY (Contd)

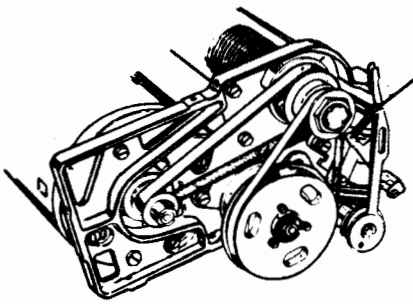

③ Unhook 41385 spring from post on line feed assembly to disengage pawls.

- To gain access to front mounting screws, it is necessary to remove left and right ribbon guides.

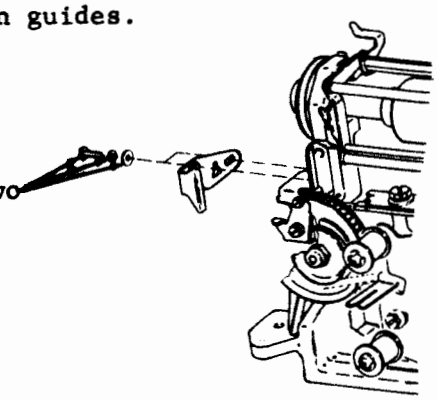

④ To remove left ribbon guide, remove two 151637 screws, 3640 lockwashers, and 125011 flat washers.

⑤ To remove right ribbon guide, remove 151637 screw, 3640 lockwasher, and 125011 flat washer.

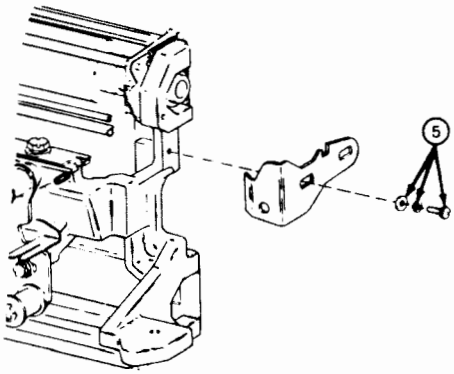

Rotate finger lever clockwise on left type carrier (idler) pulley to gain access to 153442 mounting screw, 45815 lockwasher, and 41663 flat washer. Remove hardware.

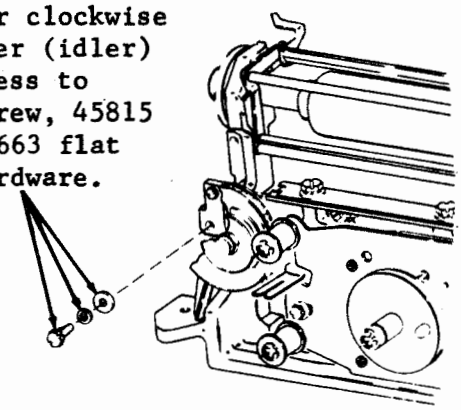

⑦ Remove three remaining 153442 screws, 45815 lockwashers, and 41663 flat washers. Move 400201 front casting assembly to left until clear of type carrier pulley and remove.

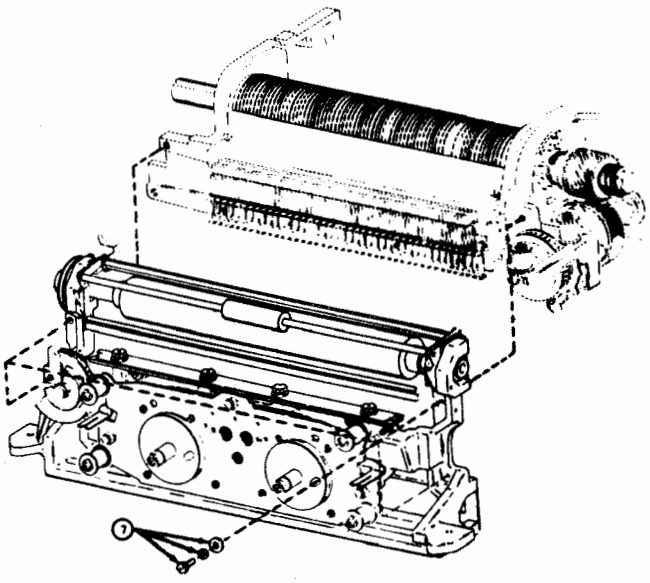

In reassembly, perform 410640 Circuit Card Assembly (6-59), 402420 Ribbon Feed Assembly (6-52), and 400645 or 400629 Type Carrier (6-53) procedures. The front adjustments should be checked to see if adjustment is required.

400300 Right Casting Assembly

- Remove 400645 or 400629 type carrier (6-53).
- Remove ac input and motor control assembly (6-56).
- Remove 410640 circuit card assembly (6-59).
- Remove 400201 front casting assembly (6-59).

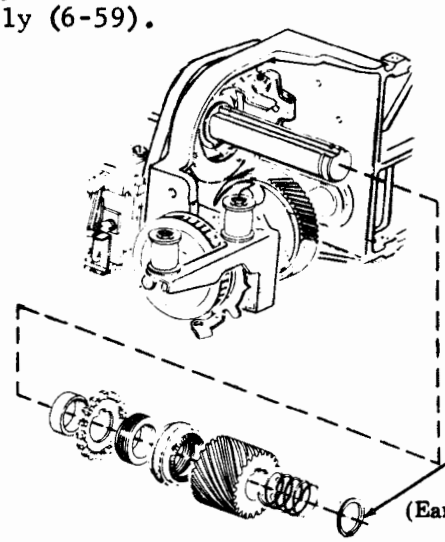

① Remove 400075 retainer from shaft.

(Early Design)

② Slide off spring, gear, adjusting ring, collar, timing wheel, and bushing from shaft.

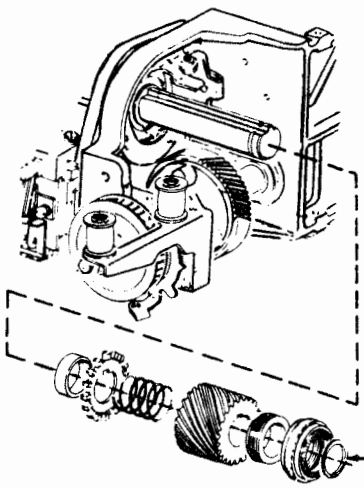

(Late Design)

① Remove 400075 retainer from shaft.

② Slide off adjusting ring, collar, gear, spring, timing wheel, and bushing from shaft.

④ Remove two 184056 screws w/lockwashers and slide switch bracket out.

③ Unhook 110438 spring from post on sensor bracket.

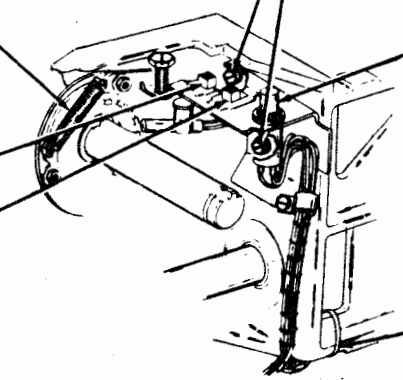

PAPER ADVANCE BUTTON

1-2 LINE FEED SWITCH

TS9

⑤ Cut cable strap.

E. FRICTION FEED PRINTER (Contd)

3. DISASSEMBLY/REASSEMBLY (Contd)

NOTE: If 400560 slide switch or 400561 button switch has to be replaced, use the following illustration for parts replacement.

•To remove sensors proceed as follows:

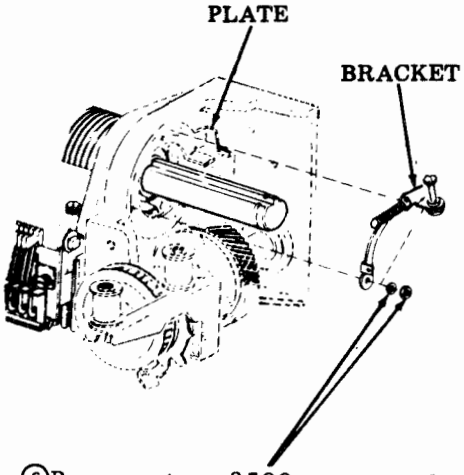

⑥Remove two 3599 nuts and 3640 lockwashers holding bracket to plate. Remove bracket.

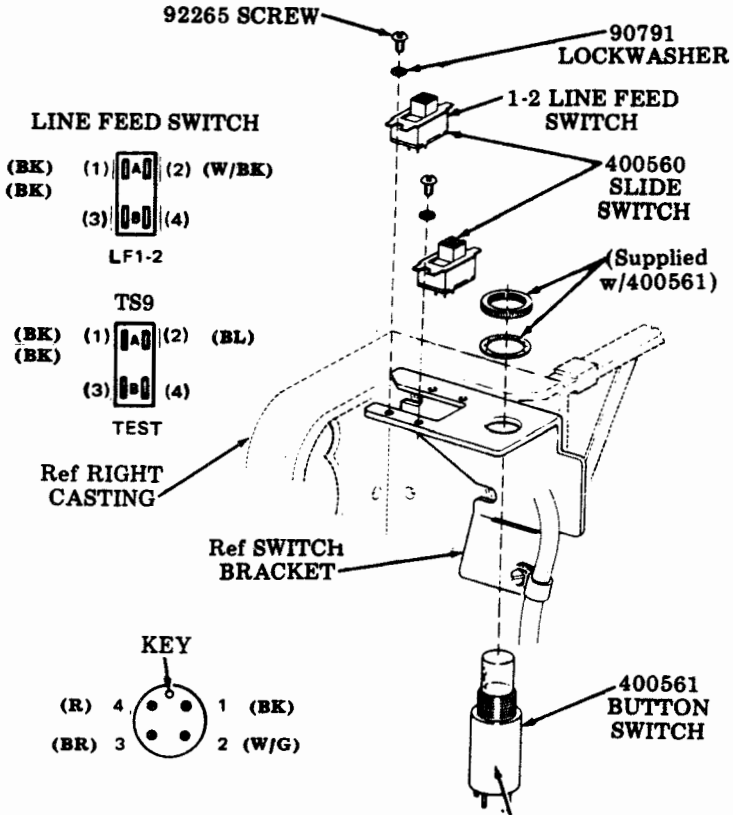

Replaced by 402500 set of parts which uses 402427 lamp (removable).

⑨Be careful not to lose 400931 spacer.

⑧Loosen screw holding sensor. Remove sensor.

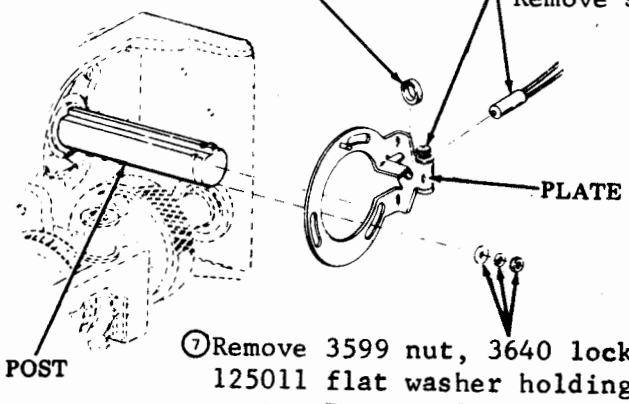

⑦Remove 3599 nut, 3640 lockwasher, and 125011 flat washer holding plate to post. Remove plate.

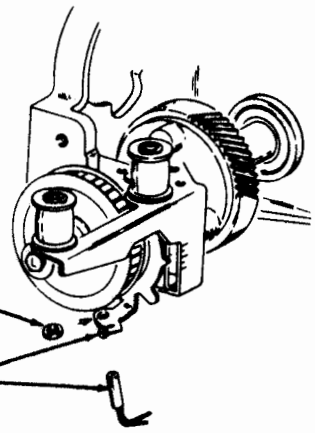

⑪Be careful not to lose 400931 spacer.

⑩On the front, loosen screw holding the sensor. Remove sensor.

3. DISASSEMBLY/REASSEMBLY, 400300 Right Casting Assembly (Cont)

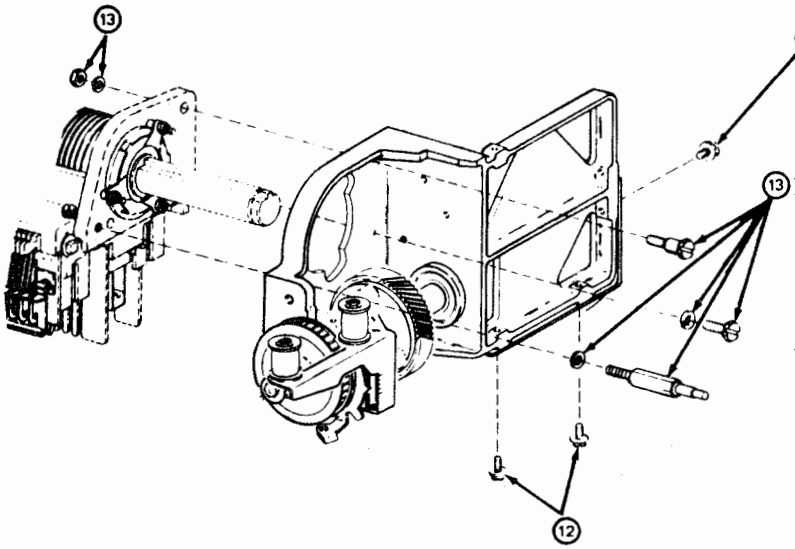

(12) Remove three 184057 screws w/lockwashers holding bottom pan to casting.

(13) Remove 400293 shoulder screw, 2669 lockwasher, and 112626 nut; remove 153442 screw and 45815 lockwasher; remove 400457 post and 2669 lockwasher. Remove 400300 right casting assembly.

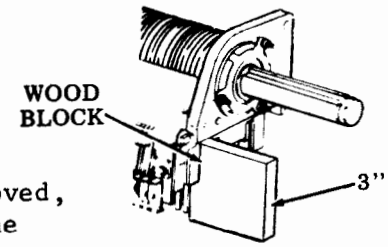

NOTE: It is suggested that when the right casting is removed, a 3-inch piece of wood be placed under the right end of the center casting to keep it from dropping.

In reassembly, perform 400201 Front Casting Assembly (6-59), 410640 Circuit Card Assembly (6-59), AC Input and Motor Control Assembly (6-56), and 400645 or 400629 Type Carrier (6-53) procedures. The front adjustments should be checked to see if adjustment is required. Check IMPELLER SHAFT SENSOR GAP (5-26) and FLAG SENSOR GAP (5-27) adjustments. On printing test, the IMPELLER SHAFT SENSOR (5-28), and FLAG SENSOR (5-28) adjustments may have to be checked.

400001 Print Head Assembly

- Remove 400645 or 400629 type carrier (6-53).
- Remove 400631 impeller shaft drive belt (6-54).
- Remove 410640 circuit card assembly (6-59).
- Remove 400201 front casting assembly (6-59).
- Remove 400300 right casting assembly (6-61).

(2) Remove 153442 screw, 45815 lockwasher, 400317 post, and 45815 lockwasher. Remove 400001 print head assembly.

(1) At left casting, remove 400923 shoulder screw, 2669 lockwasher, and 112626 nut.

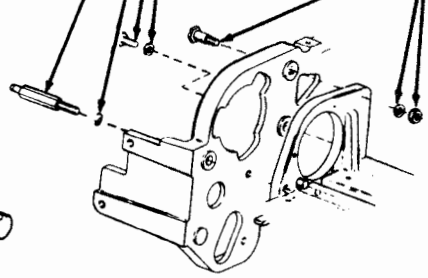

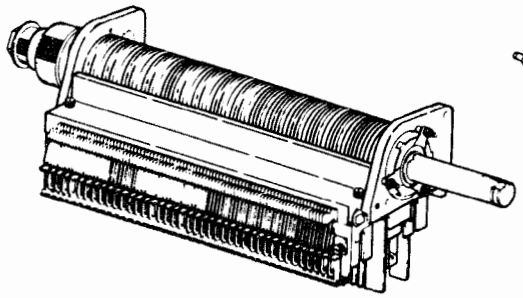

400001 Print Head Assembly

E. FRICTION FEED PRINTER (Contd)

3. DISASSEMBLY/REASSEMBLY (Contd)

Motor and Motor Fan

•Remove 400903 cover assembly (6-58).

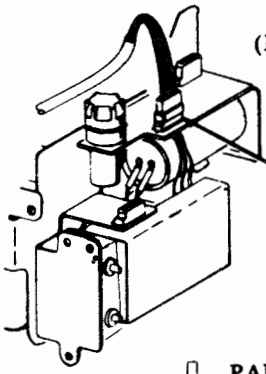

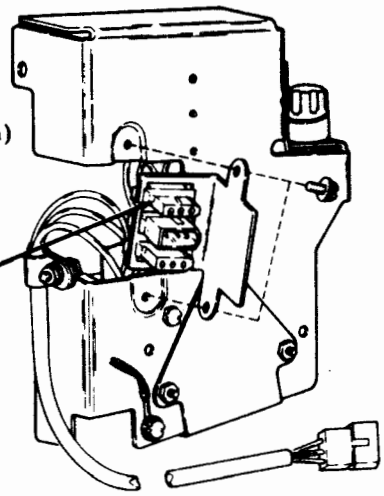

(Right Side Views)

① Remove 401649 motor cable connector.

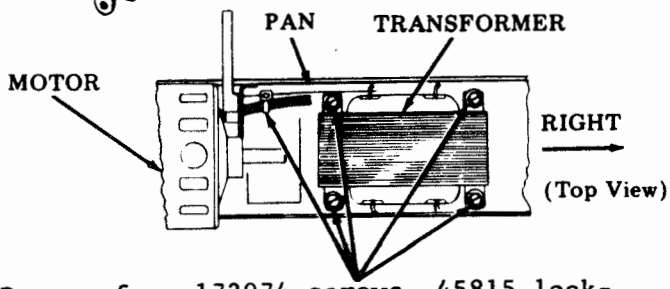

② Remove four 173974 screws, 45815 lockwashers, and 3438 flat washers holding transformer to pan. Slide transformer toward right as far as possible. Cut nylon strap.

③ Pull 328282 fan off from end of motor shaft.

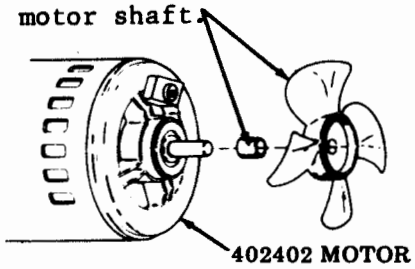

NOTE: Red reset button may be present on some units for overload protection. The 402402 motors require a 402632 motor control assembly with a 402423 motor start relay. See Page (6-57).

⑥ Loosen three motor adjusting screws friction tight.

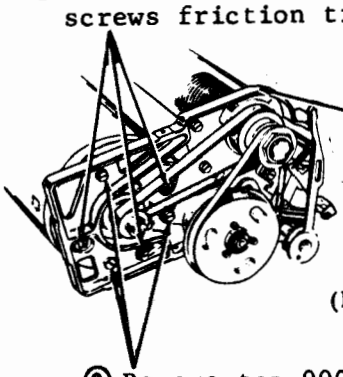

⑦ Press motor inward and up to release belt tension. Remove 400631 belt.

⑧ Remove top 99082 mounting screw and 93985 lockwasher. Remove two bottom 151723 mounting screws and 45815 lockwashers. Remove 400965 motor assembly.

④ Remove left 184056 mounting screw.

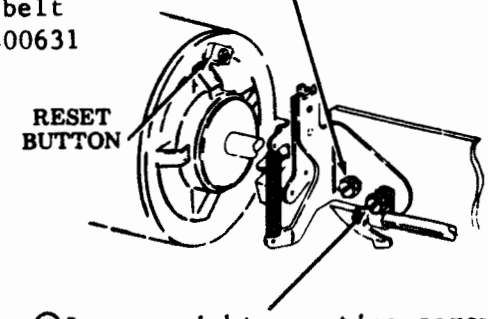

⑤ Loosen right mounting screw and then pivot switch bracket up approximately 90 degrees.

In reassembly, make sure fan blade is properly remounted and does not touch mounting plate of paper-out assembly. Plug cable connectors. Perform IMPELLER SHAFT DRIVE BELT TENSION adjustment (5-12).

400955 Low Paper Alarm and Paper Advance Switch Assembly

Remove 400903 cover assembly (6-58).

②From right side, remove 151631 screw, 2191 lockwasher, and 7002 flat washer. Unplug connector from associated cable connector. Remove 400955 low paper alarm and paper advance switch assembly.

①Remove 184056 screw from left side.

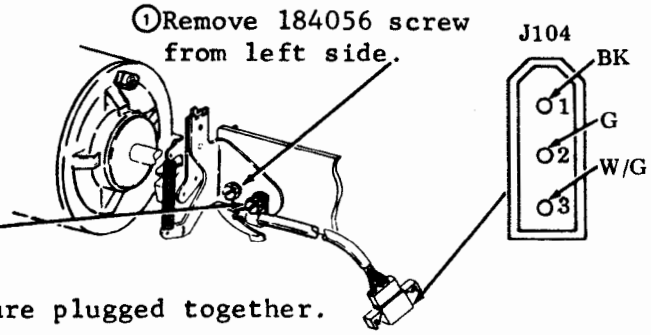

In reassembly, make sure the connectors are plugged together.

400901 Transformer

•Remove 400903 cover assembly (6-58).

②Unsolder four leads to transformer. Remove 400901 transformer.

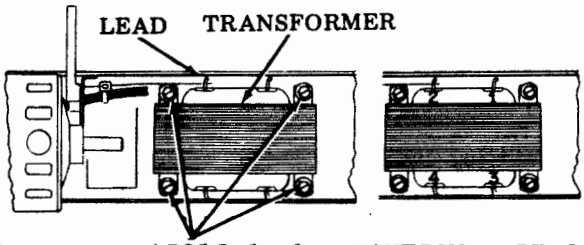

Terminal	Color
1	BK
2	W
3	Y
4	BR

①Remove four 173974 screws, 45815 lockwashers, and 3438 flat washers holding transformer to pan.

CAUTION: BE CAREFUL NOT TO CUT OR PINCH ANY OTHER WIRES.

In reassembly, note the numbering of tansformer terminals and follow coloring wire list. Retie cable.

F. CONTROLLER -- 40C437

1. REMOVAL AND REPLACEMENT

NOTE: On late model covers, mounting screws are retained in cover. Loosen these screws.

Floor Mounted

②Remove controller cover (ten mounting screws).

⑤Pull controller forward slightly to unhook from tabs which secure rear of controller to pedestal door.

④Remove two screws which mount front of controller to pedestal door.

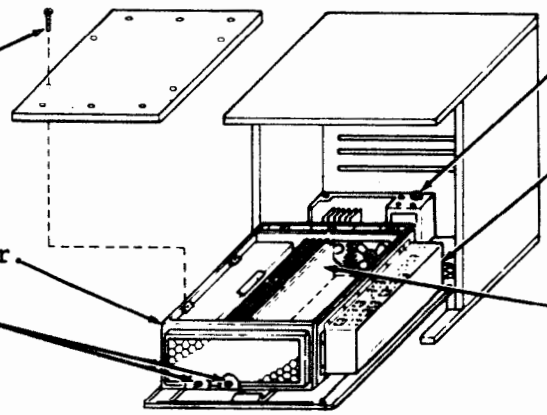

①Turn main power switch off.

③Disconnect all cables from interconnection module.

⑥Remove controller from pedestal.

To install controller in pedestal, reverse removal procedures.

F. CONTROLLER — 40C437 (Contd)

1. REMOVAL AND REPLACEMENT (Contd)

Rack Mounted

②Loosen the two captive screws which hold controller slides in close position and pull controller to extended position.

③Loosen ten captive screws which mount controller cover. Remove cover.

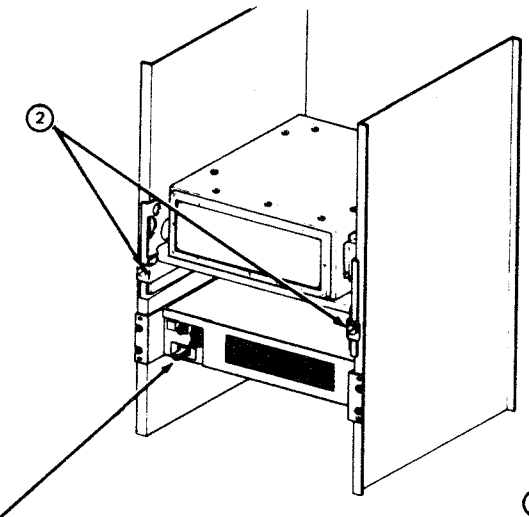

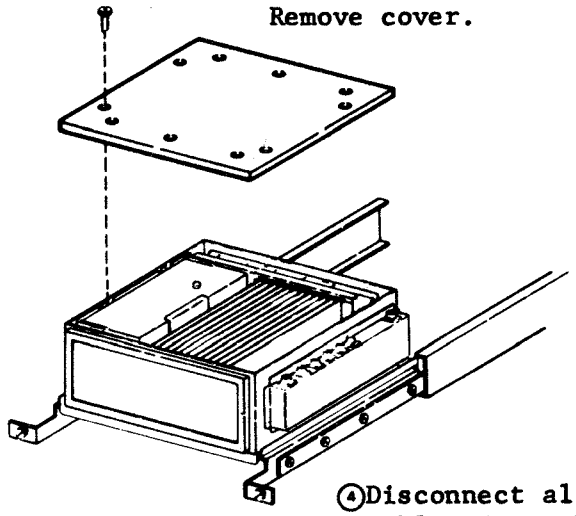

①Turn off main power switch on interface assembly.

⑤Remove two screws which mount the front of controller to mounting plate.

④Disconnect all cables from the interconnection module.

⑥Pull controller forward slightly to unhook from tabs which secure the rear of controller to mounting plate. Remove controller from mounting plate.

To install controller, reverse the removal procedure.

Interconnection Module

①Turn main power switch off.

④Disconnect ac power plug from fan assembly.

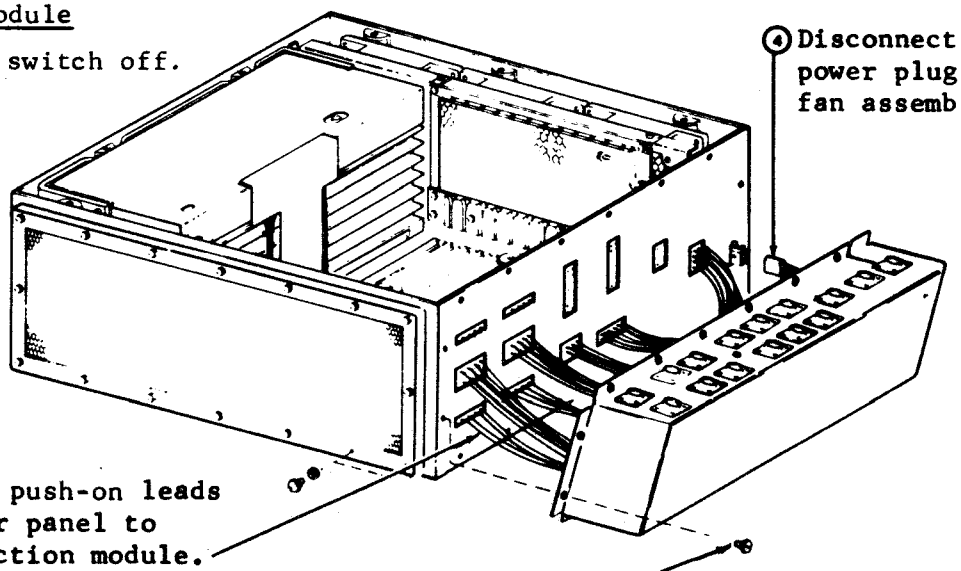

③Disconnect push-on leads from filter panel to interconnection module.

⑤Remove interconnection module.

②Remove 16 181241 screws mounting interconnection module to controller frame.

To install interconnection module, reverse removal procedures. Refer to WDP for wiring of filter assemblies.

40PSU103 Power Supply

①Turn main power switch off.

⑦Lift power supply and rest on edge of frame. Reach in at rear of power supply and disconnect ac connector.

⑥Release power supply handle latch and power supply latch on side of frame.

④Slide controller forward and tilt up for access to bottom and remove power supply shipping bolt.

⑤Return controller to its original position and disconnect leads from power supply to controller back panel.

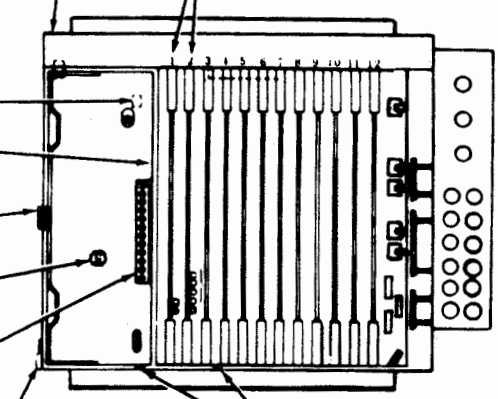

To install power supply, reverse removal procedures.

Controller Interface Cards

⑤ Remove four 100011 nuts and 2191 lockwashers. (See Note.)

⑦ Remove three 100011 nuts and 2191 lockwashers. (See Note.)

⑧ Remove 410157 circuit card.

⑥ Remove 410555 circuit cards.

① Remove two 407548 cable assemblies.

② Remove 407546 cable assembly.

③ Remove 407544 cable assembly.

④ Remove 407543 cable assembly.

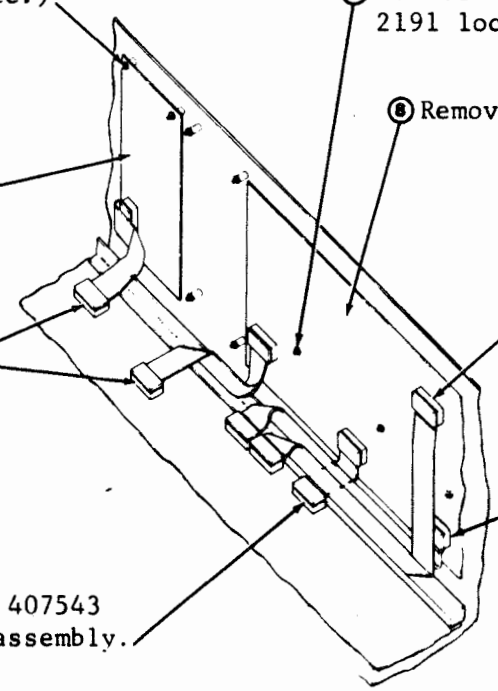

NOTE: Early design models used 3599 nuts, 3640 lockwashers and 125011 flat washers to mount interface cards.

To install circuit cards, reverse removal procedures.

F. CONTROLLER - 40C437 (Contd)

1. REMOVAL AND REPLACEMENT (Contd)

410203 Back Panel

①Turn main power switch off.

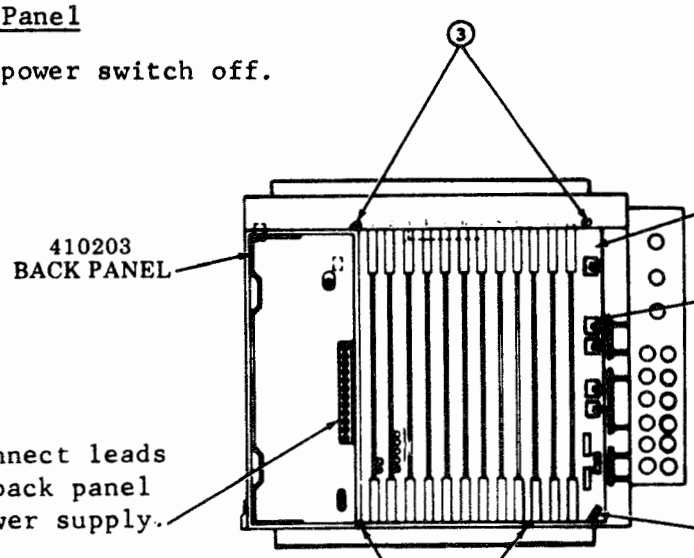

To install back panel, reverse removal procedures.

Filter Assemblies

To remove filter assemblies.

- Remove interconnection module.
- Remove controller interface cards.

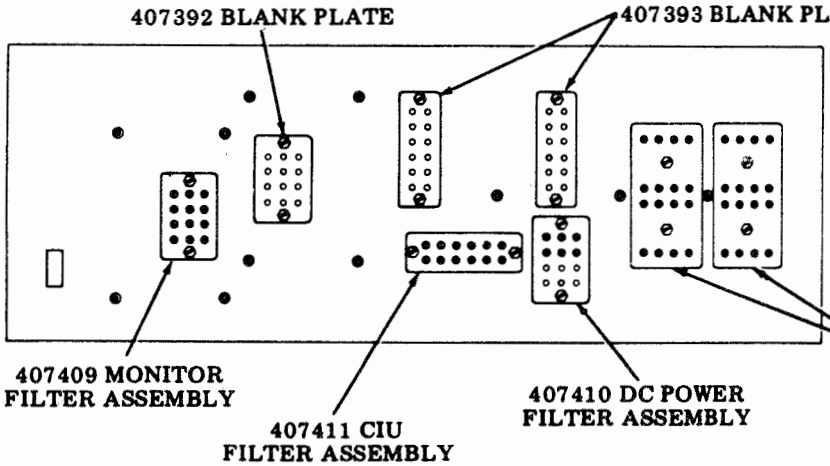

①Remove two 181241 screws which mount filter to be removed.

②Remove filter assembly.

When installing filter assemblies, orientate assembly so that the long filter pins are toward the inside of the controller container.

When installing the 407409 filter assembly, it must be orientated with the long filter pins toward the inside of the controller and the top row must have two feed-through connectors in positions 2 and 3. Feed-through connectors are identified by a glass bead at bottom of connector pin.

Fan Assembly

- Remove interconnection module. Only disconnect fan ac connector.
- Remove 40PSU103 power supply.
- Remove 410203 back panel.

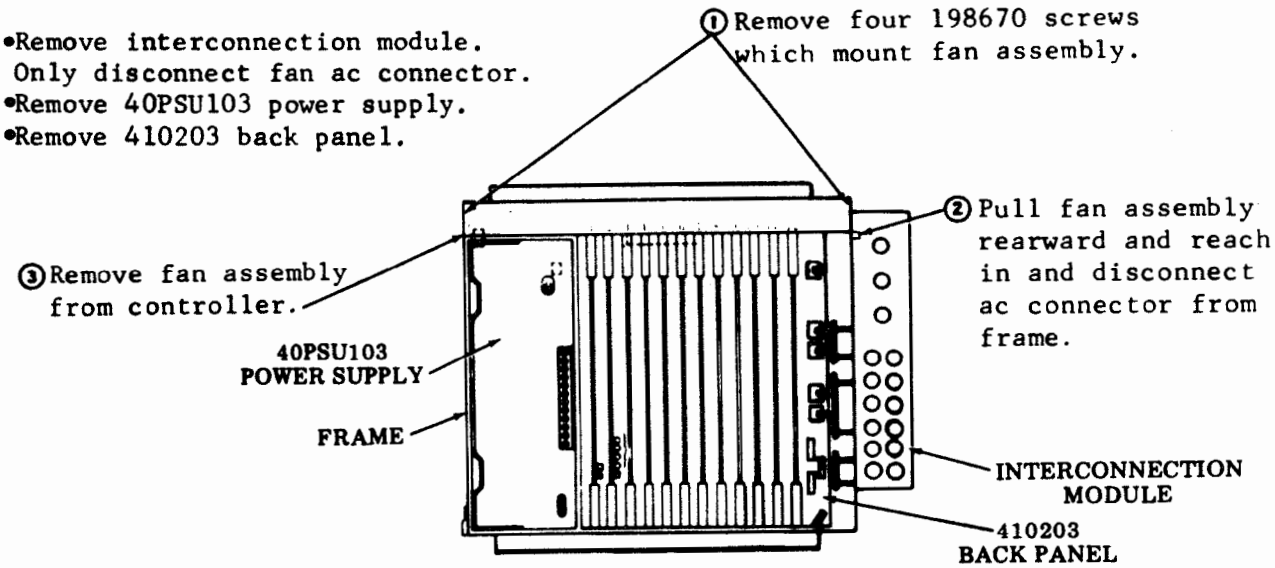

To install fan assembly, reverse removal procedures.

2. DISASSEMBLY/REASSEMBLY

Fan Assembly

① Remove four 81258 screws, 7002 flat washers, 2191 lockwashers and 3598 nuts for each fan to be removed.

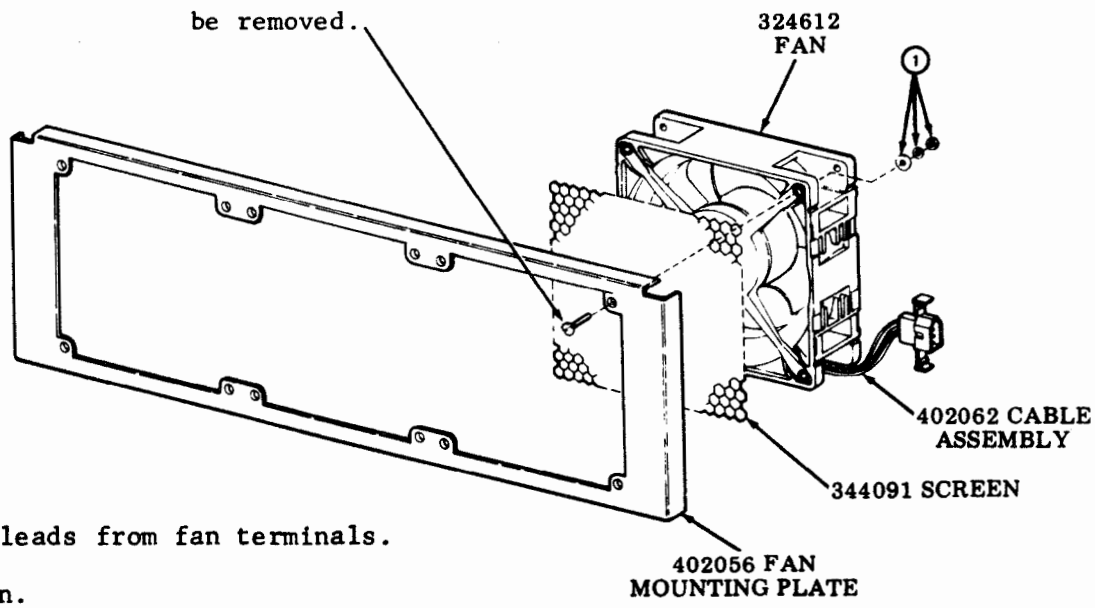

② Unsolder leads from fan terminals.

③ Remove fan.

To reassemble fan assembly, reverse disassembly procedures. Refer to 9562WD in WDP for wiring of fan.

G. CASSETTE DRIVE

1. CASSETTE DRIVE REMOVAL AND REPLACEMENT -- RACK MOUNT

①Loosen the two captive screws which hold the cassette drive slide assembly in closed position. Pull cassette drives to extended position.

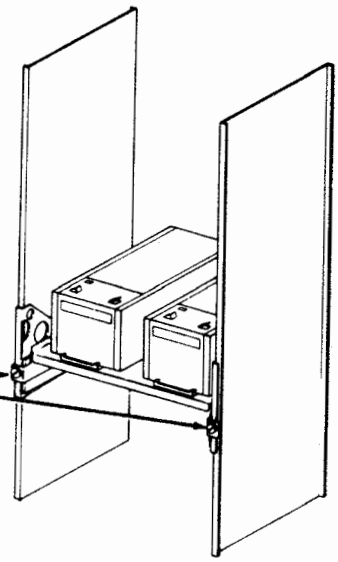

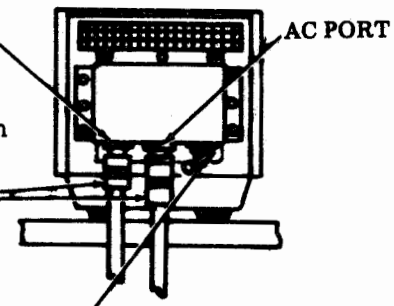

③Disconnect SSI and ac cable on drive to be removed.

NOTE: On late design cassette drives the "off" position of switch is away from ac power cable.

②Turn off cassette drive power switch on drive to be removed.

④On the drive to be removed, remove two 181241 screws which mount the 406879 front hold down bracket slide, hold down the forward bracket so that the extension on the bracket clears the cassette drive base. Remove the hold down bracket.

⑤Slide the cassette drive forward so the drive base clears the extensions on the rear 406879 hold down bracket. Remove drive from mounting plate.

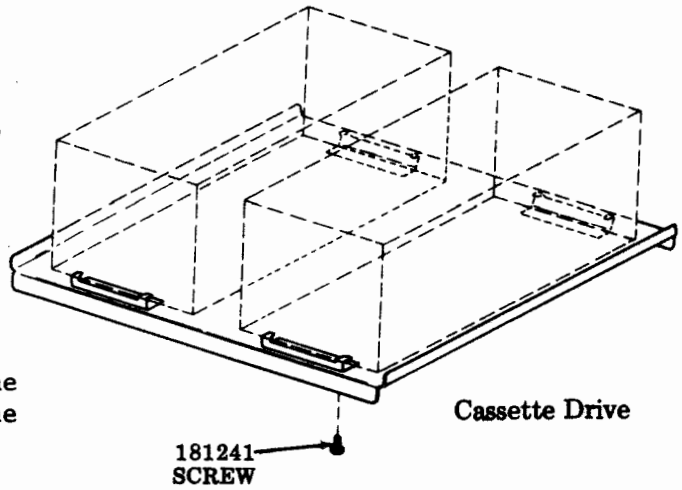

To install a cassette drive, reverse the removal procedures.

2. REMOVAL AND REPLACEMENT OF UPPER CABINET ASSEMBLY

To remove cover.

①Remove 12 198670 screws with washers which mount the 408598 SSI/AC interface assembly.

②Move the 408598 SSI/AC interface assembly to the rear slightly.

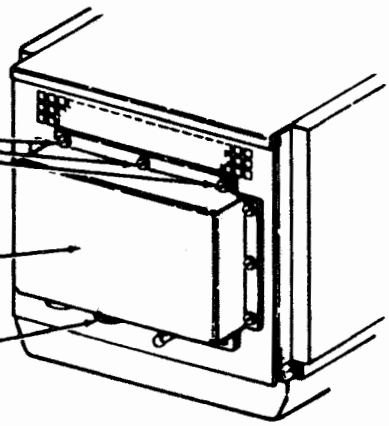

NOTE: Disconnect cables from controller (if mounted).

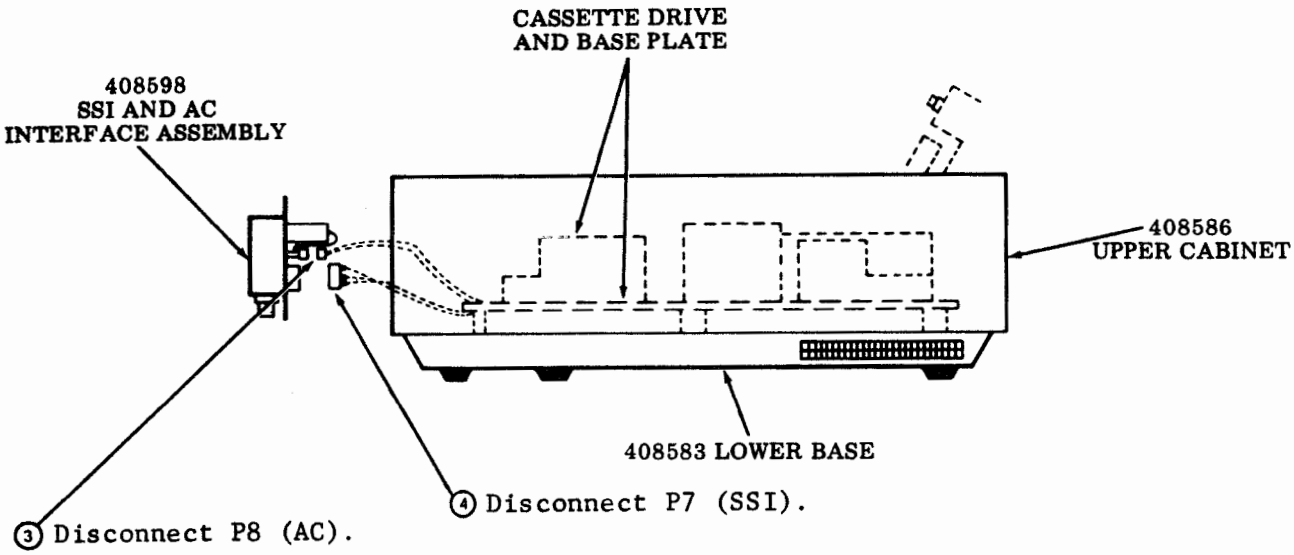

⑤ Lay cassette drive on its side for access to the underside of drive.

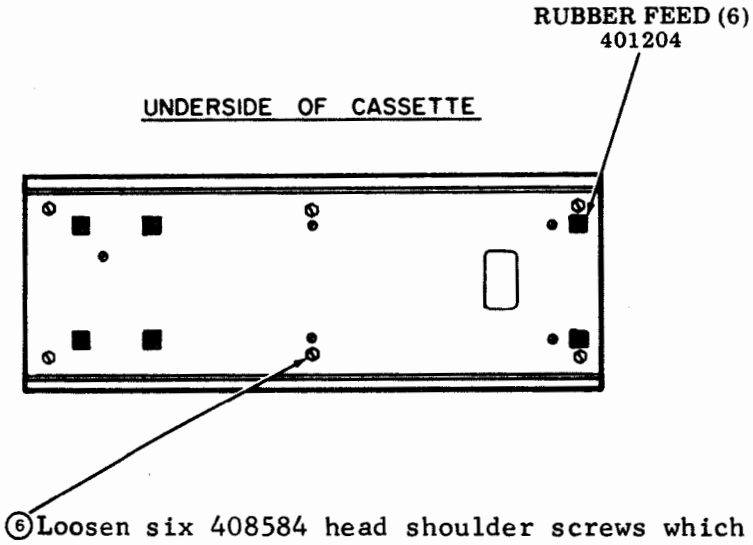

⑦Holding the base and cover firmly together, return the cassette drive to its upright position.

⑧Remove the cover from the base with cassette drive by lifting the cover straight up.

To replace the cover, reverse the removal procedure.

WARNING: DO NOT OVERTIGHTEN THE SIX 408584 CAPTIVE SCREWS WHICH MOUNT THE COVER.

G. CASSETTE DRIVE (Contd)

3. SUBASSEMBLY IDENTIFICATION

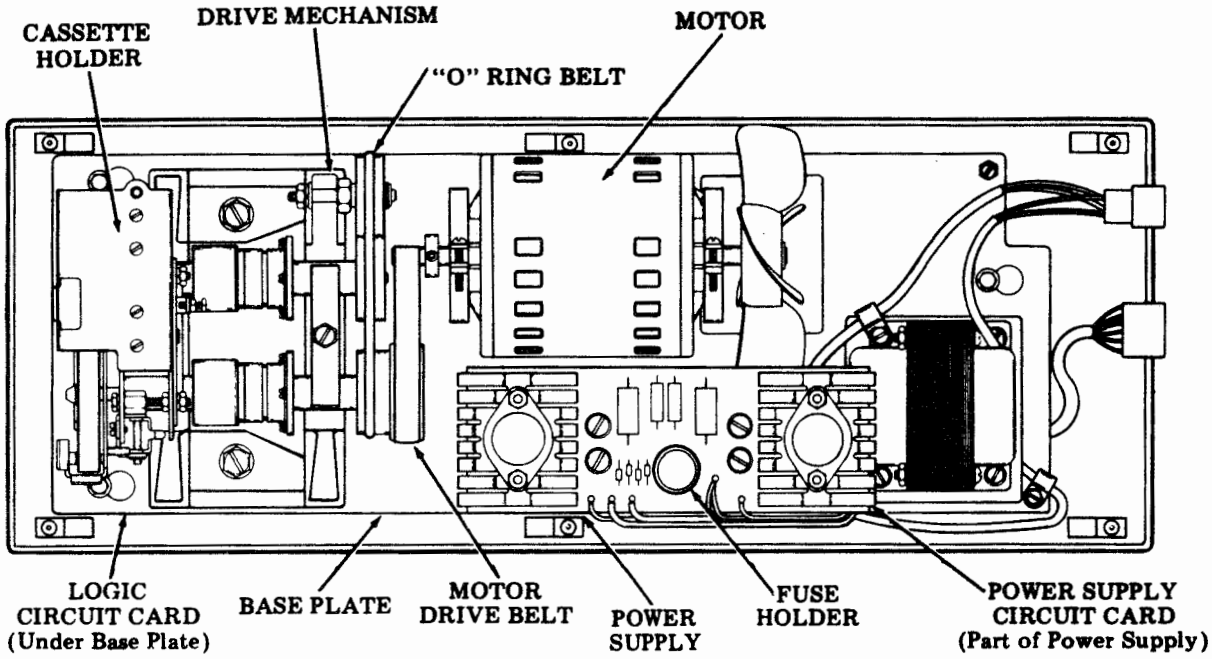

4. DISASSEMBLY/REASSEMBLY DRIVE

40CD102 Cassette Drive (From Cabinet Base)

- Remove cabinet.

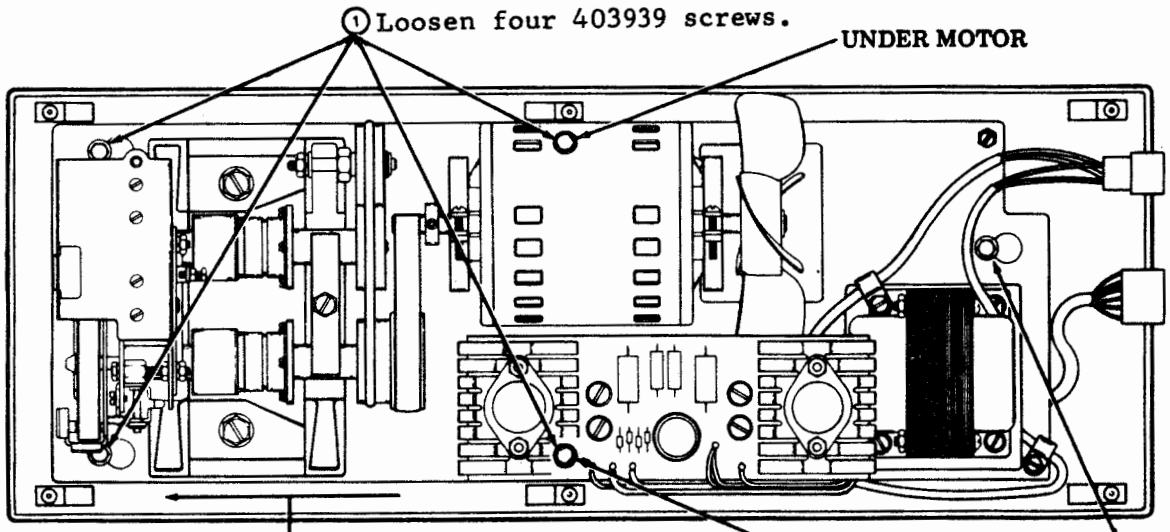

Slide base plate forward until screws loosened in Steps 1 and 2 are centered in circular holes and lift off.

To install cassette drive with base plate, reverse removal procedures. Before sliding cassette drive rearward, screws must be centered in circular holes located under power supply and motor.

403300 Drive Belt

•Remove cabinet.

② Move drive assembly in direction shown to loosen drive belt.

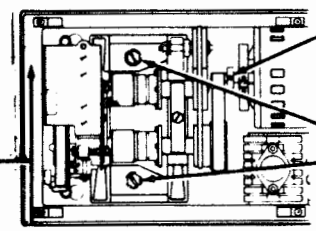

③ Remove 403300 drive belt.

① Loosen two mounting screws.

To install drive belt, reverse procedures. Recheck MOTOR DRIVE BELT and MOTOR PULLEY adjustments (5-76).

410764 Logic Circuit Card

•Remove cassette drive with base.

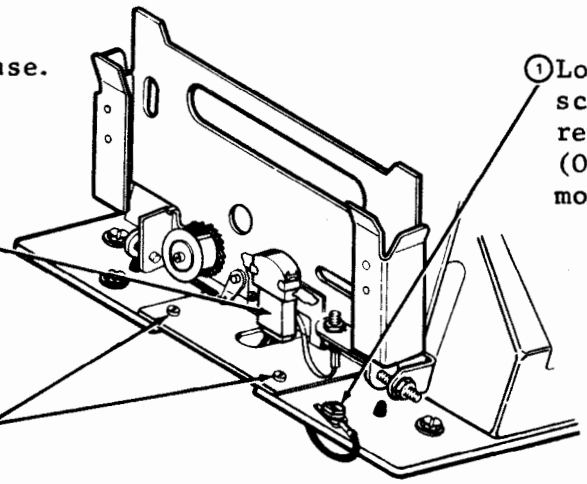

① Loosen 403939 screw and remove terminal. (On early design models only.)

③ Remove tape head connector.

② Remove two 110434 screws and 110743 lockwashers. Remove 403301 cover with slot.

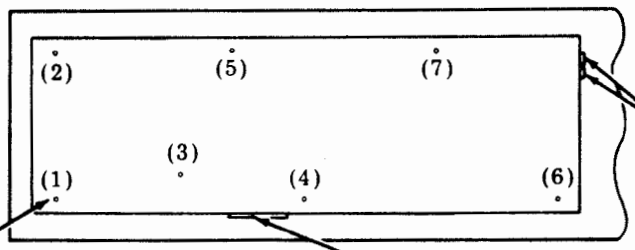

⑦ Remove P1 and P2 connectors.

⑧ Remove P4A and P4B connectors.

⑥ Pry card off of 403586 plastic studs in order shown by numbers in parentheses. See illustration showing manner of removal.

④ Push projection in with orange stick (or equivalent).

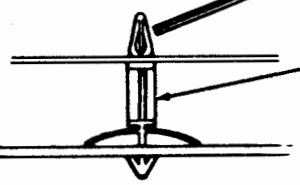

⑤ Apply pressure upward here with thumb or fingers at same time projection is being pushed inward.

Manner of Prying Circuit Card From Plastic Studs

G. CASSETTE DRIVE (Contd)

4. DISASSEMBLY/REASSEMBLY DRIVE (Contd)

40CD102 Cassette Drive (From Cabinet Base) (Contd)

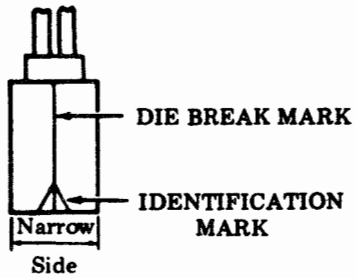

To install 410764 logic circuit card, reverse removal procedures. Circuit card must be installed with component side toward baseplate. Projections or 403586 plastic studs must secure circuit board. The tape head connector must be assembled to the tape head so that the identification mark is to the right as viewed from the front of the cassette drive.

143307 Fuse

- Remove cover.

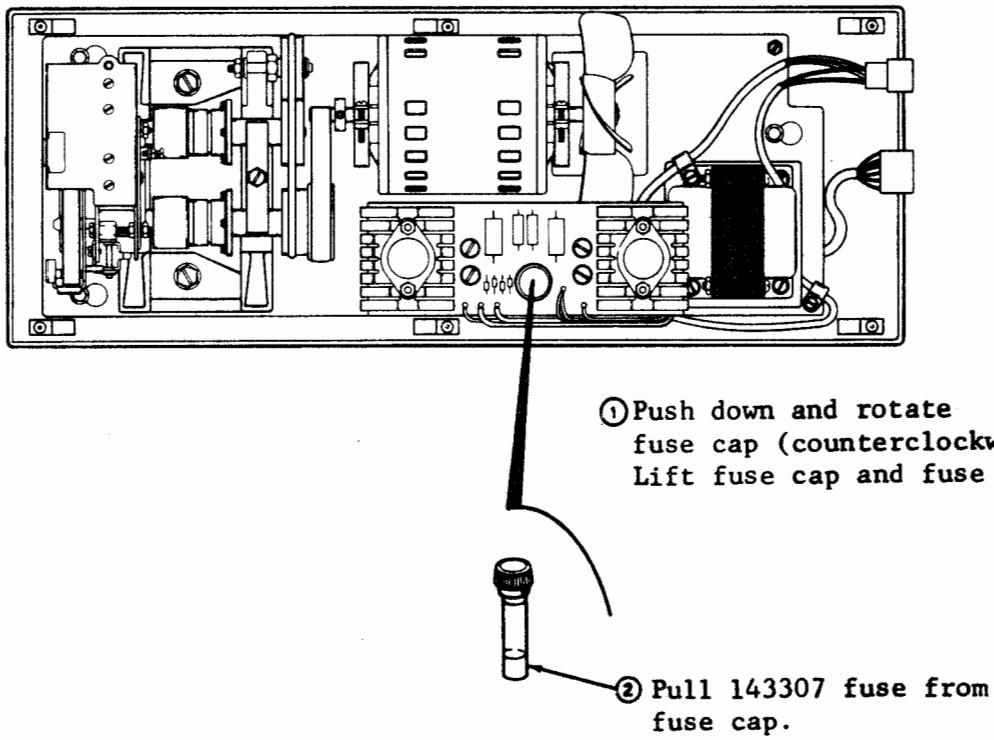

To install fuse, reverse removal procedures.

NOTE: Replace with 143307 0.6 amp Slow-Blow fuse.

410043 Power Supply Circuit Card

•Remove cover.

①Unsolder six leads shown in illustration.

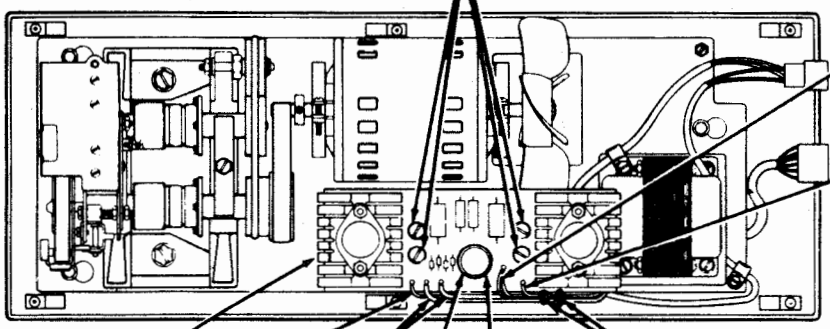

To install circuit card, reverse procedures. Cover lower portion of fuse holder with suitable heat shrink tubing after black leads are soldered in place. Secure cable assembly to power supply circuit board with two RM43679 cable ties.

406103 Transformer (40C102)

①Cassette drive with base-plate must be free of cabinet base.

⑤Remove one 151630 screw, 99260 lockwasher and terminal connected to two red-yellow leads.

④Remove heat shrink tubing from fuse holder. Unsolder two leads.

⑥Remove two black leads from positions 1 and 3 of connector.

⑦Remove two 184056 screws.

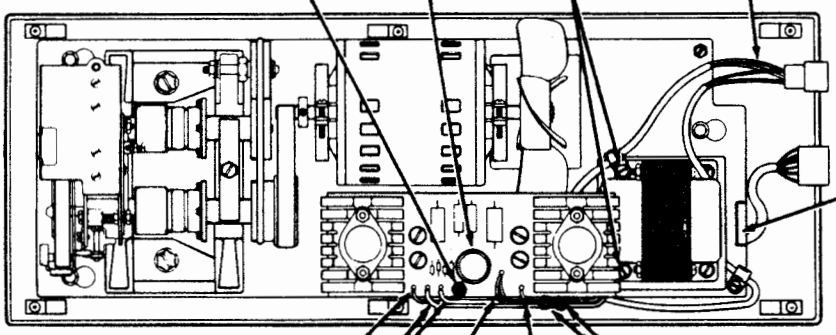

⑧Remove plug from J1 connector on logic circuit card.

YELLOW
RED
RED-YELLOW
BLUE

②Cut two cable ties. Remove lacing twine.

③Unsolder leads.

To install 406103 transformer, reverse removal procedures. Cover lower portion of fuse holder with suitable heat shrink tubing after leads are soldered in place. Secure cable assembly to power supply circuit board with two RM43679 cable ties.

G. CASSETTE DRIVE (Contd)

4. DISASSEMBLY/REASSEMBLY DRIVE (Contd)

406101 Power Supply

- Cassette drive with baseplate must be free of cabinet base.

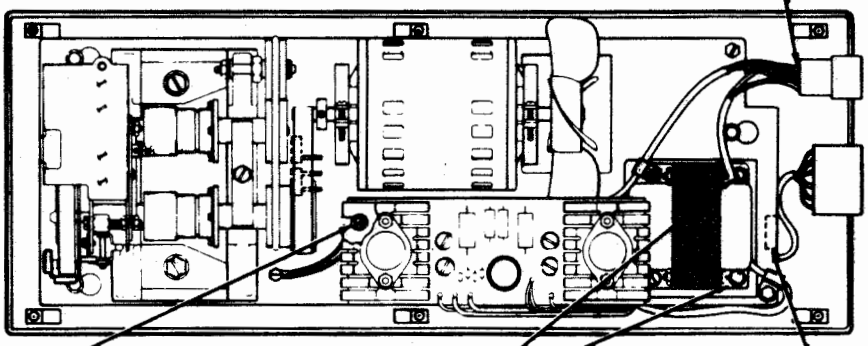

① Remove two black leads from positions 1 and 3 of connector.

② Remove plug from J1 connector under logic card.

③ Remove one 198670 screw with washer.

④ Remove two 184058 screws with washers, 72509 lockwashers and 3598 nuts.

To install power supply, reverse procedures.

403303 Motor Assembly

- Remove 403300 belt drive.

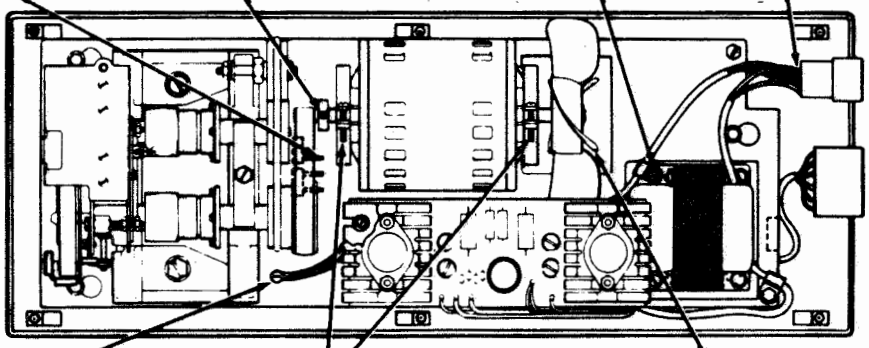

③ Loosen 92115 set-screw and remove 403299 driver.

② Remove two leads from connector positions 1 and 3 (from power supply).

⑥ Remove 151631 screw, 7002 washer and 121244 clamp.

⑦ Remove three slip-on terminals from motor capacitor.

① Remove one 151630 screw and 107116 star washer.

⑤ Remove two 151621 screws, 151622 nuts and four 403298 mounting straps.

④ Remove 403302 motor fan by prying off (friction fit).

To install motor, reverse procedures.

G. CASSETTE DRIVE (Contd)

5. DISASSEMBLY/REASSEMBLY SSI/AC INTERFACE (Contd)

410300 Circuit Card

- Remove upper cabinet assembly (6-70).
- Remove SSI/AC interface from cabinet assembly (6-70).
- Remove rear enclosure assembly from interface assembly (6-77).

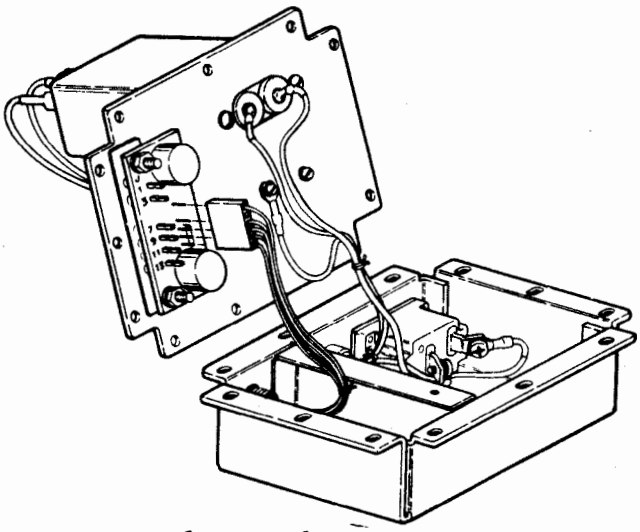

To install a new 410300 circuit card, reverse removal procedure.

408590 Filter Assembly Removal

- Remove upper cabinet assembly (6-70).
- Remove SSI/AC interface assembly (6-70).
- Remove rear enclosure assembly from interface assembly (6-77).
- Remove 410300 SSI from circuit card (6-78).

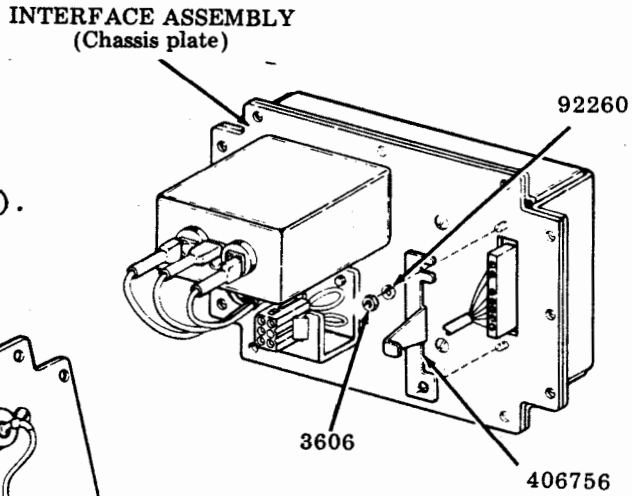

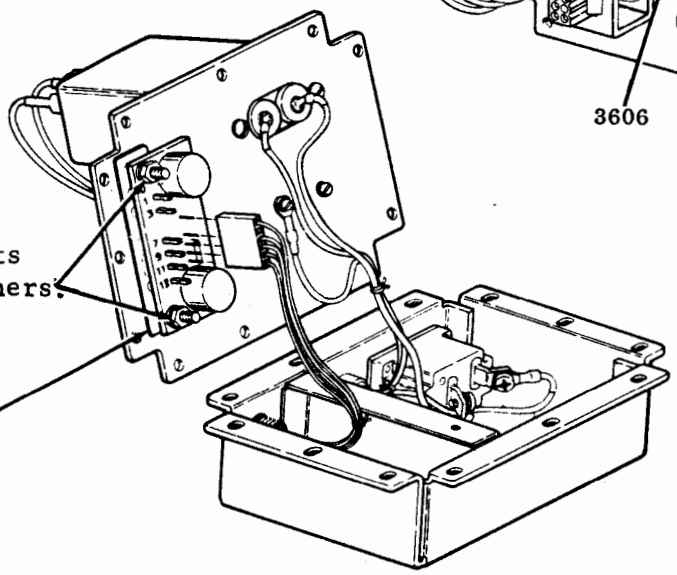

To install new 408590 filter assembly, reverse removal procedure.

408607 AC Filter Assembly Removal

- Remove upper cabinet assembly (6-70).
- Remove SSI/AC interface assembly from upper cabinet assembly (6-70).
- Remove rear enclosure assembly from interface assembly (6-77).

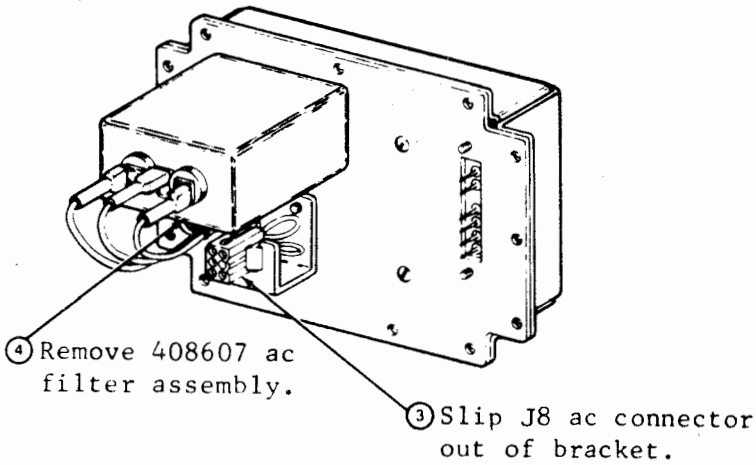

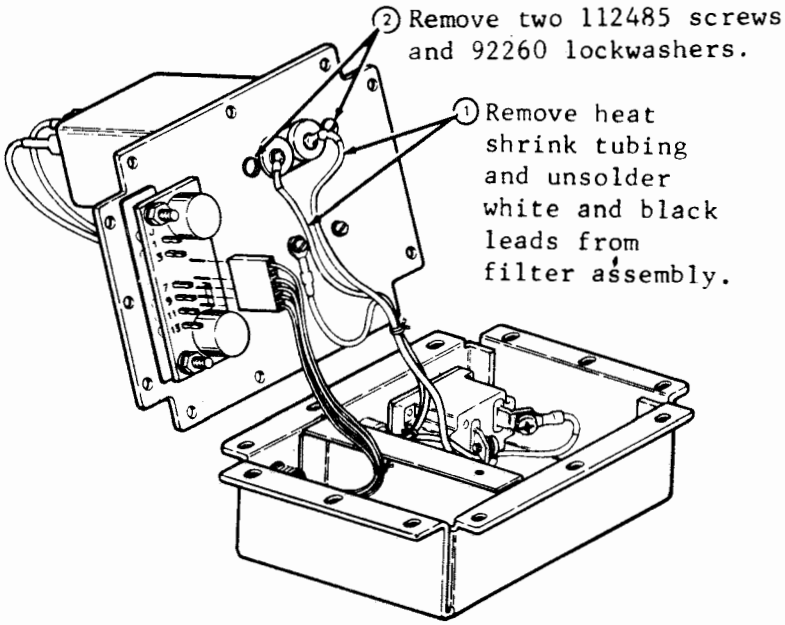

To install the ac filter assembly, reverse the removal. When resoldering leads to line side of filter, solder black lead to terminal 5 and white lead to terminal 4. Leads should be covered with heat shrink tubing after soldering.

G. CASSETTE DRIVE (Contd)

5. DISASSEMBLY/REASSEMBLY SSI/AC INTERFACE (Contd)

408594 Circuit Breaker Removal

- Remove upper cabinet assembly (6-70).
- Remove rear enclosure assembly from interface assembly (6-77).

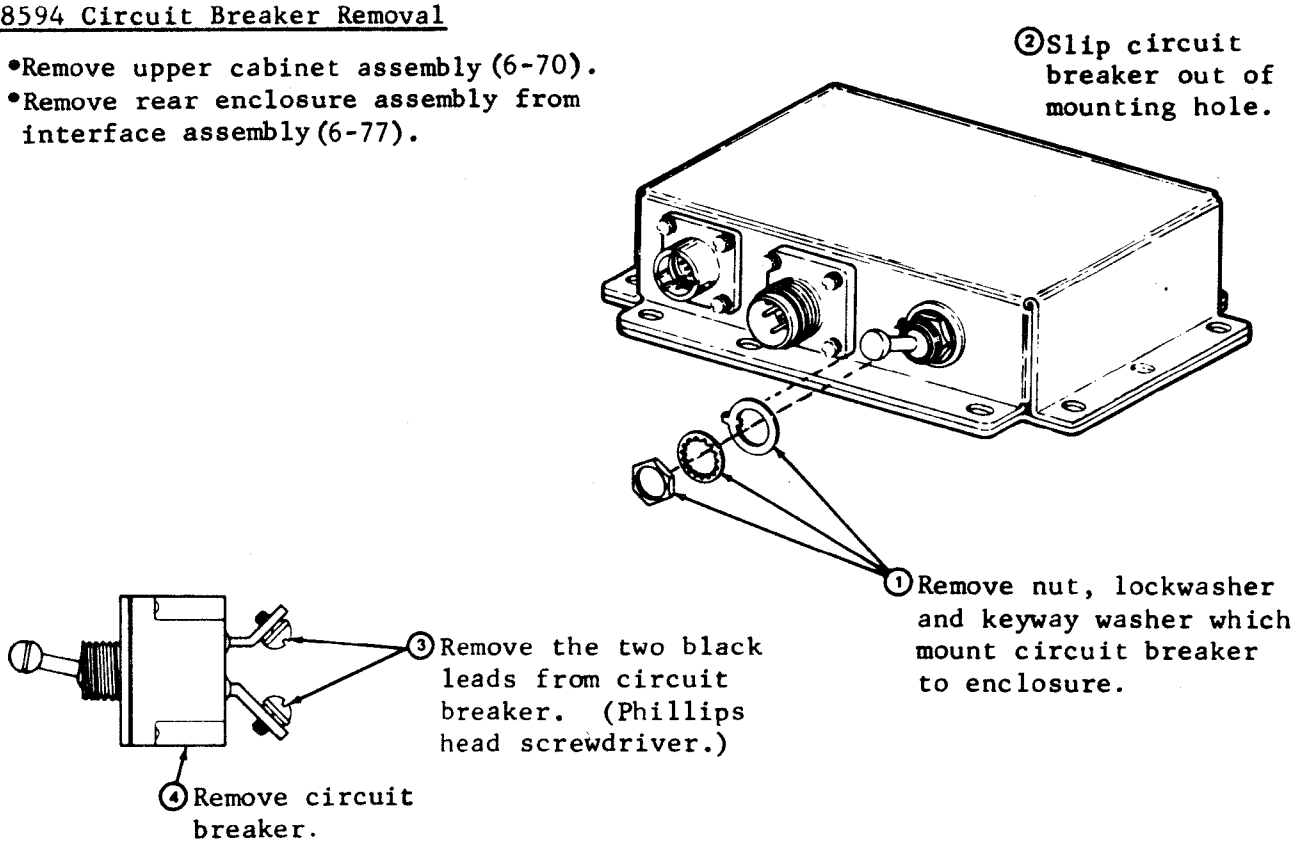

To install a new 408594 circuit breaker, reverse removal procedure. When connecting the black leads, proceed as indicated below.

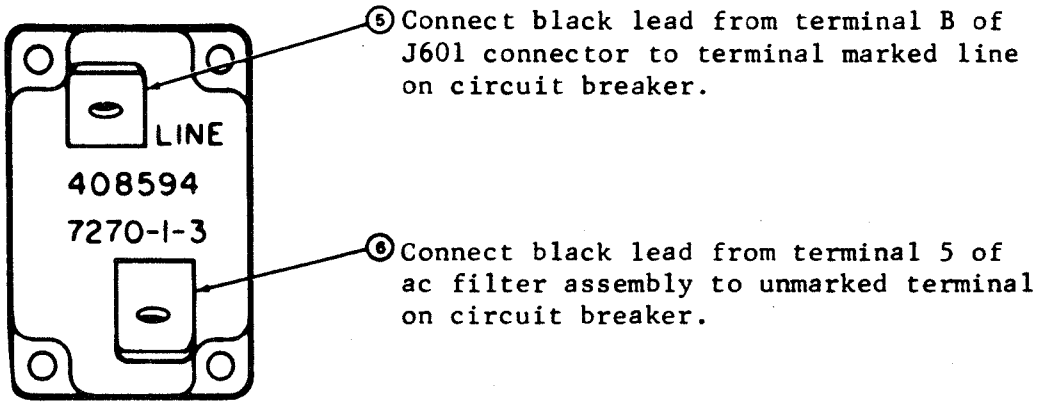

When mounting circuit breaker in rear enclosure, orientate circuit breaker so that keyway is pointing toward small hole next to circuit breaker mounting hole.

403289 BELT "O" RING

- Remove 403300 drive belt.

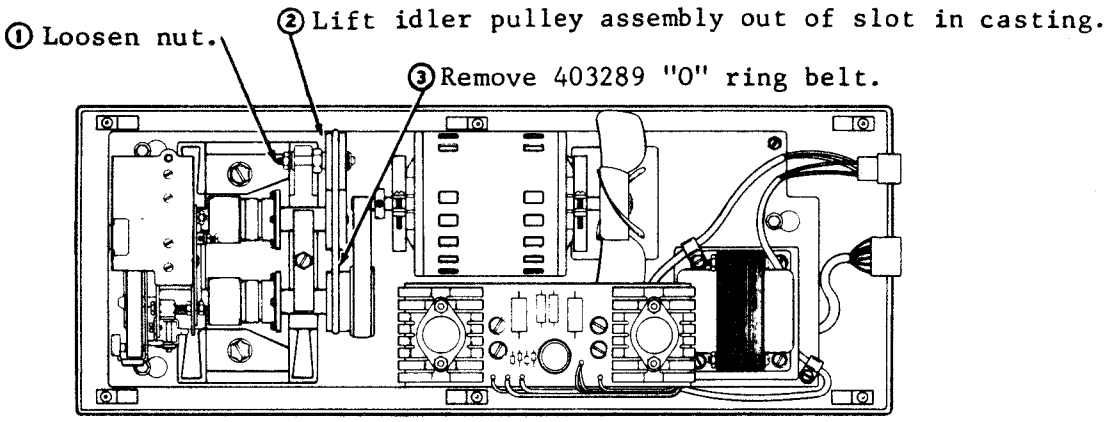

To install, reverse procedures. Recheck BELT ("O" RING) adjustment (5-74).

5. DISASSEMBLY/REASSEMBLY SSI/AC INTERFACE

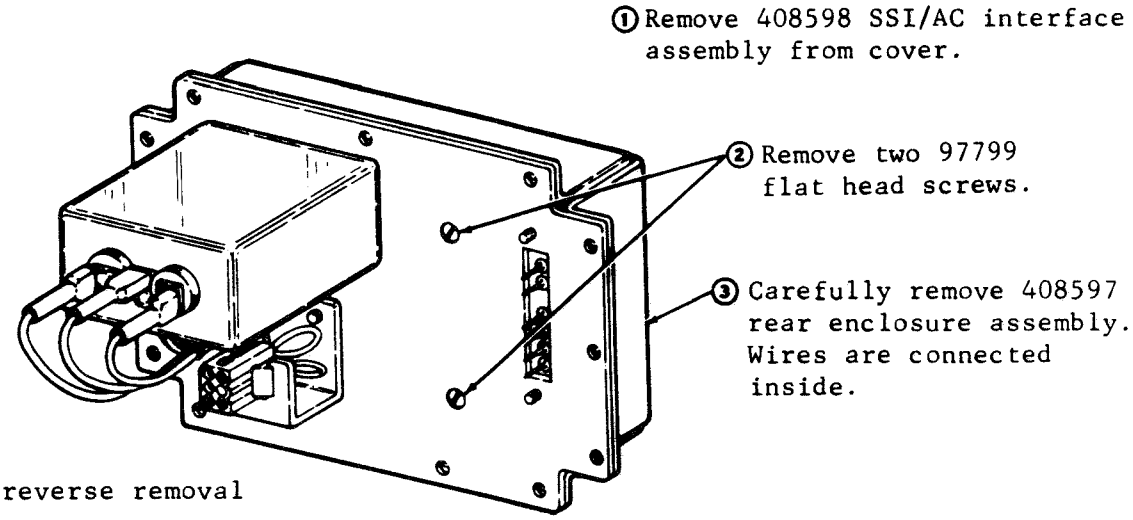

To replace, reverse removal procedures.

408591 SSI Cable Assembly Removal

- Remove upper cabinet assembly (6-70).
- Remove rear enclosure assembly from the interface assembly (6-77).

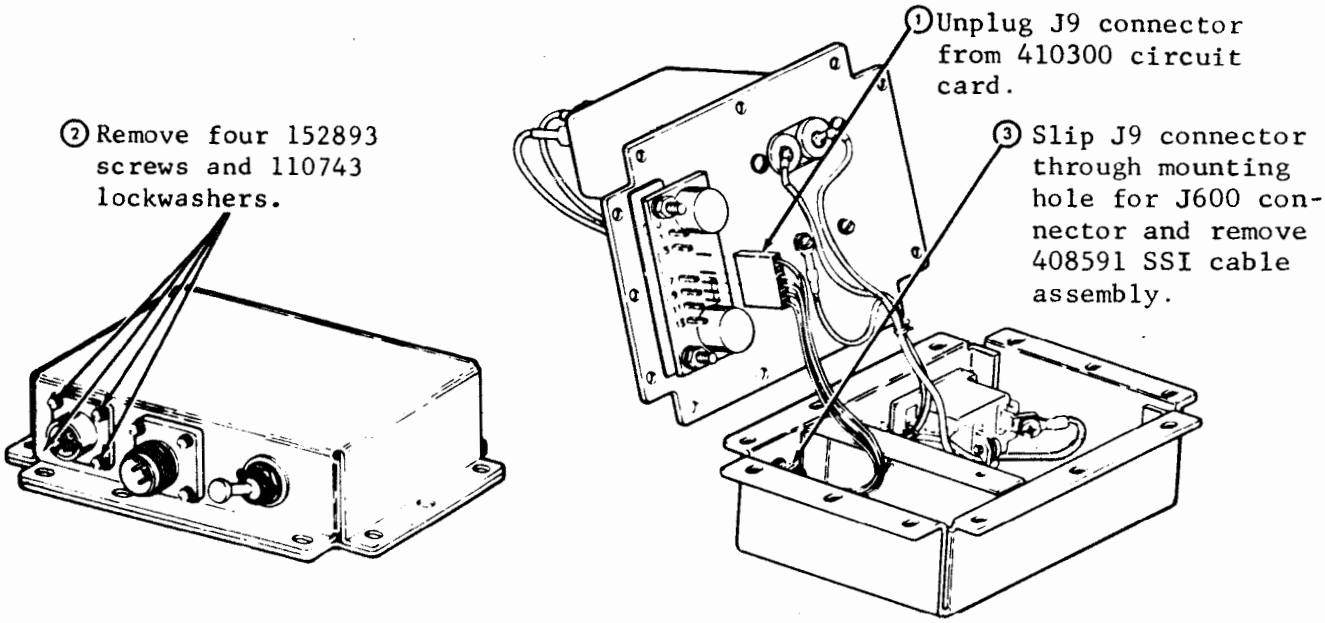

To install SSI cable assembly, reverse removal procedure.

408592 AC Cable Assembly Removal

- Remove the upper cabinet assembly (6-70).
- Remove the rear enclosure assembly from the interface assembly (6-77).

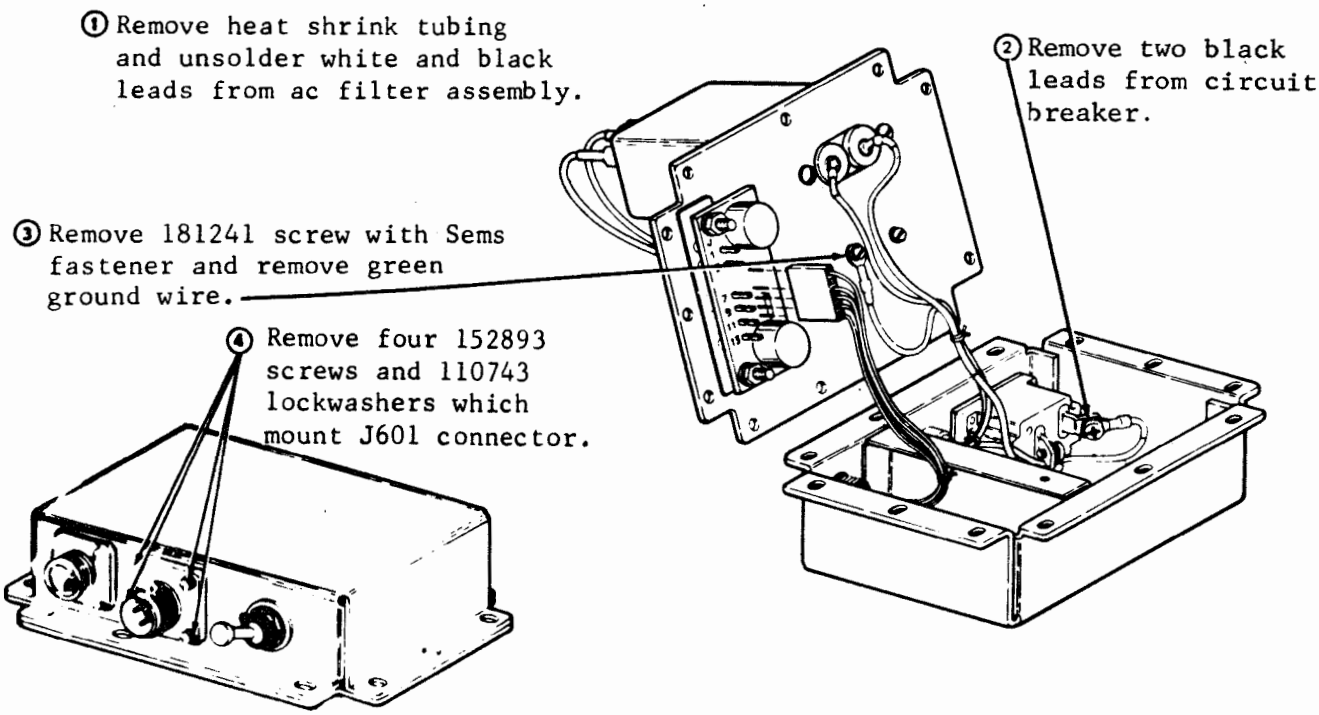

G. CASSETTE DRIVE (Contd)

5. DISASSEMBLY/REASSEMBLY SSI/AC INTERFACE (Contd)

To install the 408592 ac cable assembly, reverse the removal procedure. When connecting the black leads to the circuit breaker, proceed as indicated below:

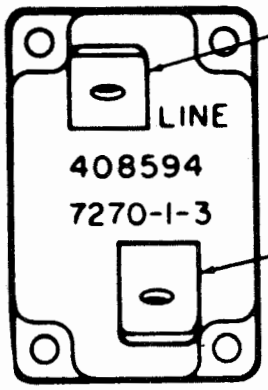

① Connect black lead from terminal B of J601 connector to terminal marked line on circuit breaker.

② Connect black lead from terminal 5 of ac filter assembly to unmarked terminal on circuit breaker.

③ When connecting the white and black leads to the ac filter assembly, solder the black lead from circuit breaker to terminal 5 of the ac filter assembly. Solder the white lead from terminal A of J601 connector to terminal 4 of the ac filter assembly. The leads should be covered with heat shrink tubing after soldering.

H. CABINETS

1. REMOVAL -- 40CAB352/RC OR 4CAB354/RB CABINET PARTS

To replace 333588 lamp in 335123 switch:
① Remove 403800 PAPER button.
② Replace lamp.

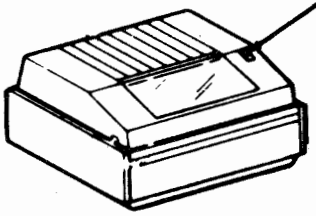

To remove 335123 switches:
① Remove switch button.
② Remove nut from top of switch.
③ Unsolder leads.
④ Remove switch.

To remove 403785 fan:
① Disconnect plug from ac input.
② Remove three 150978 screws.
③ Remove fan assembly.

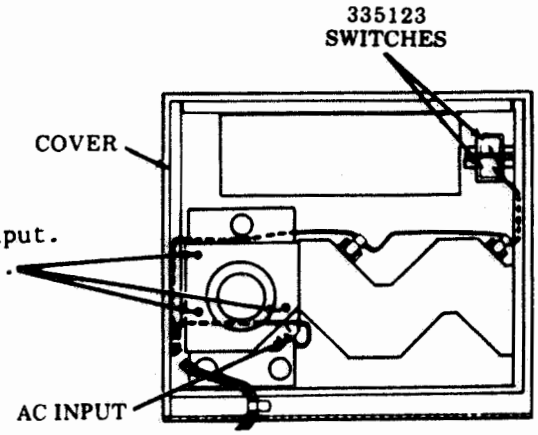

410549 Transformer Assembly

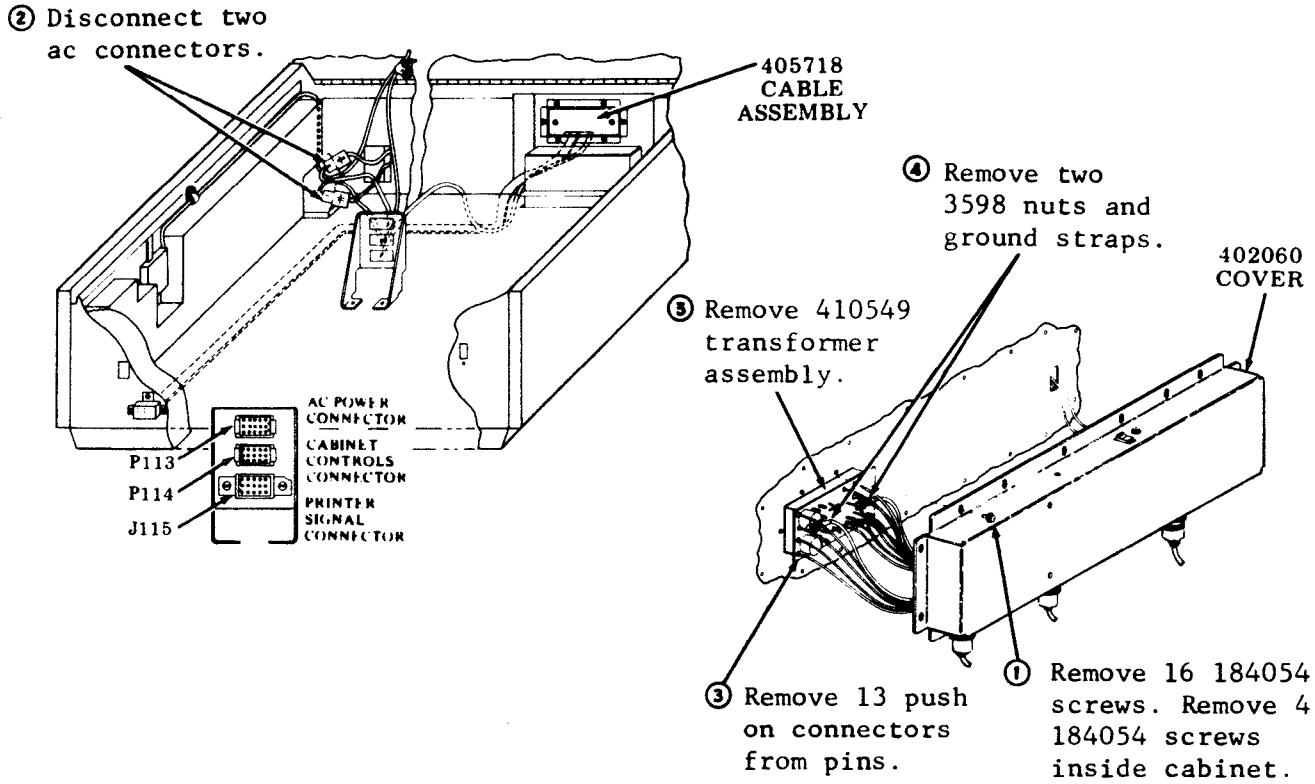

403615 Filter Panel Assembly

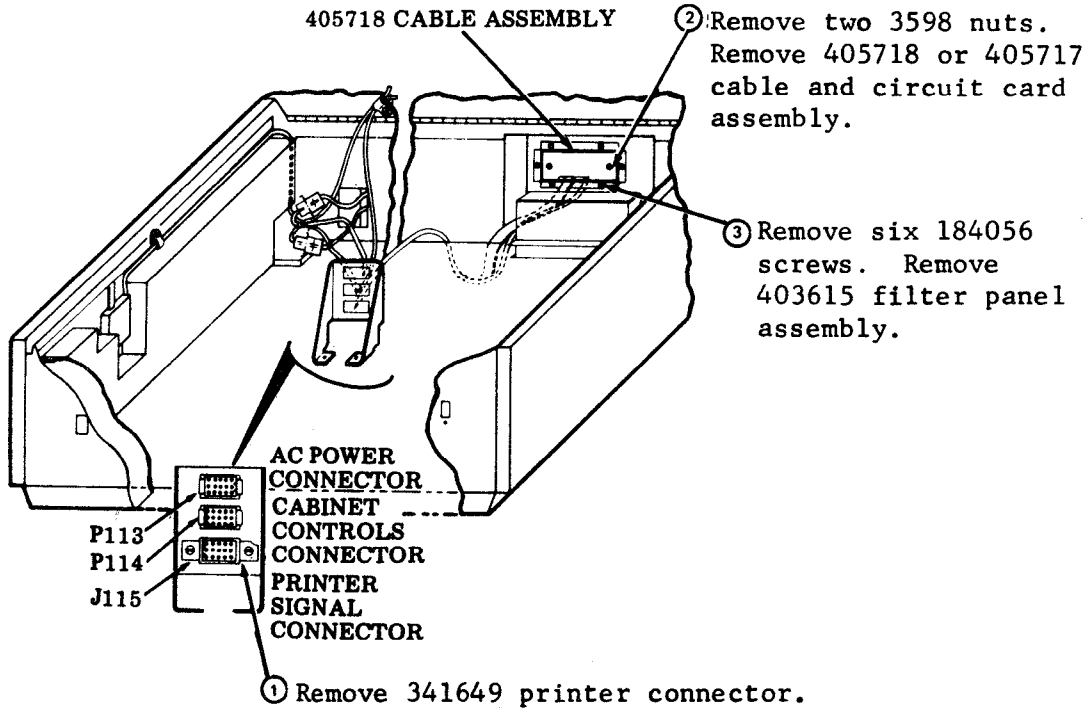

H. CABINETS (Contd)

2. REMOVAL -- 40CAB202/RC CABINET PARTS

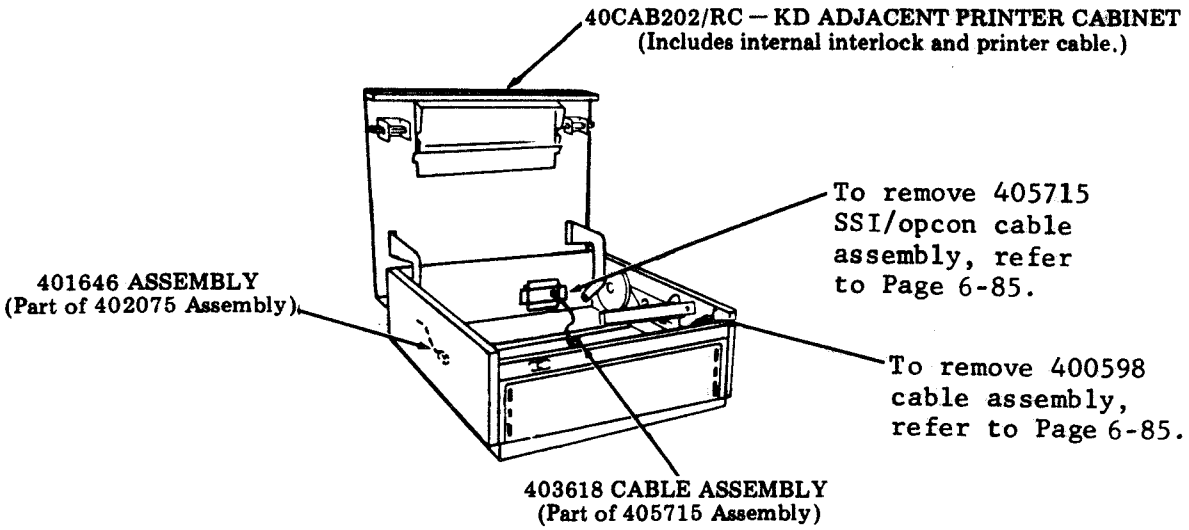

410549 Transformer Assembly

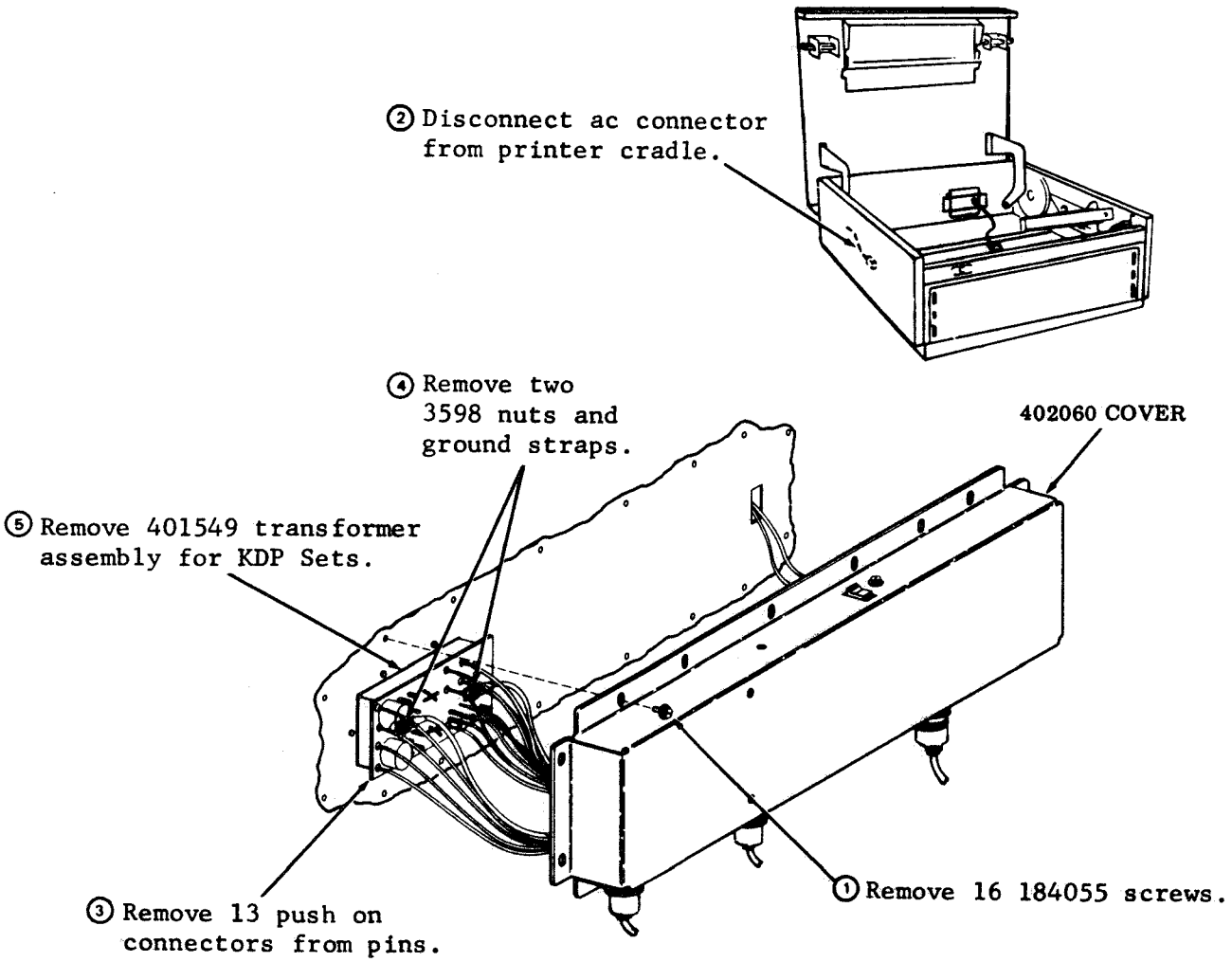

403615 Filter Panel Assembly

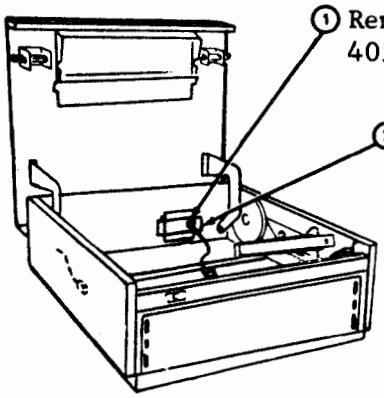

① Remove two 3598 nuts then remove 405715 cable assembly.

② Remove six 184056 screws then remove 403615 filter panel assembly.

400598 Cable Assembly

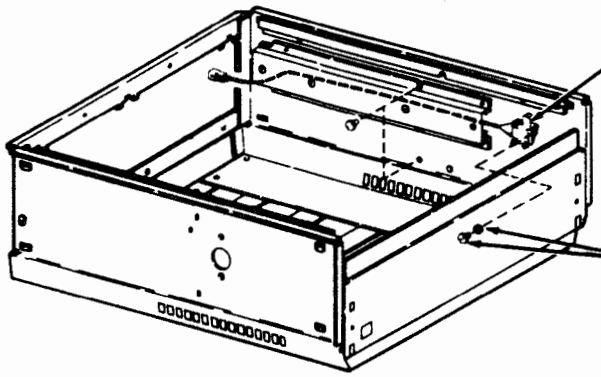

400575 INTERLOCK SWITCH ASSEMBLY (Part of 400598 Assembly)

① Remove two 152893 screws and two 3640 lockwashers.

② Remove assembly.

I. PEDESTAL

1. DISASSEMBLY

Pedestal Tops

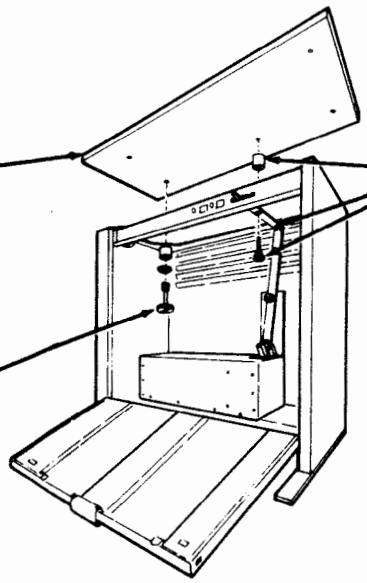

401914 24-1/2" SLOTTED PEDESTAL TOPS

② Remove 402035 spacer, 402037 lever, and 402036 shoulder screw.

① Remove four 2449 lockwashers and 401512 thumbscrews.

I. PEDESTAL (Contd)

2. REMOVAL AND REPLACEMENT

Interface Assembly -- Floor Mounted

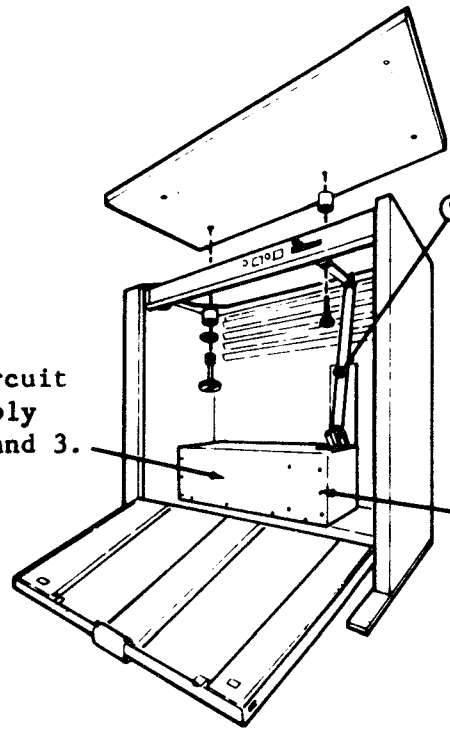

① Remove 402039 shoulder screw, 402038 spacer and 402040 lever which actuate circuit breaker.

③ Remove interface circuit card mounting assembly (6-87), Steps 1, 2 and 3.

② Remove interface cover (18 screws).

⑥ Disconnect signal cable to controller and power cables to devices.

⑦ Remove three sealtite connectors from bottom of interface assembly.

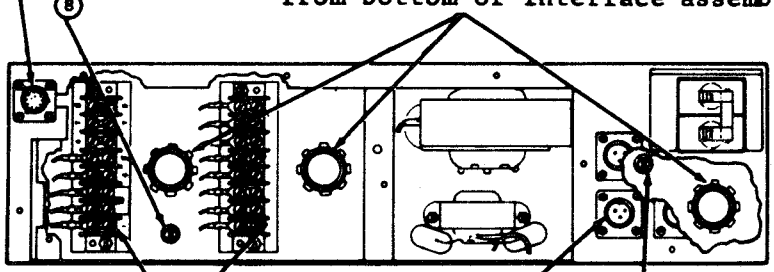

④ Remove signal, clock and control leads that connect interface to external circuitry.

(Top View)

⑤ Remove 151723 screws in ac compartment and remove interface assembly from pedestal.

(Front View)

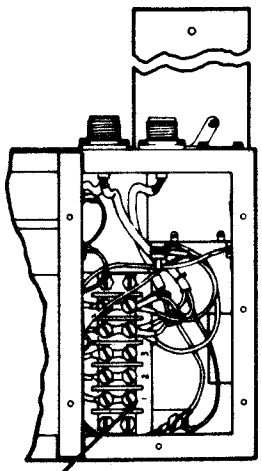

⑧ Be sure main break for ac power line is turned off. Disconnect ac leads to interface.

To install interface assembly reverse removal procedures.

Interface Circuit Card Mounting Assembly

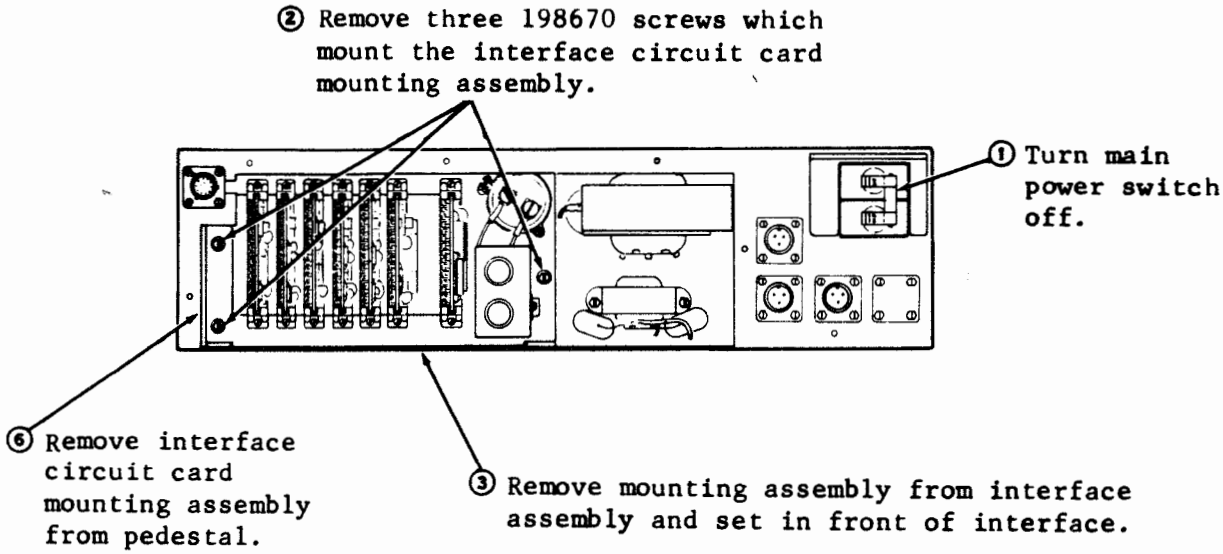

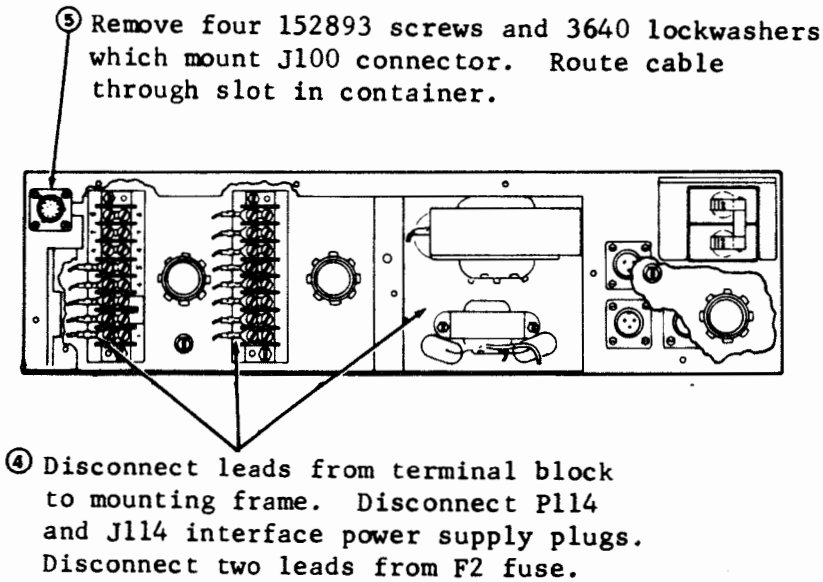

To install interface circuit card mounting assembly reverse removal procedures. Refer to 9559WD in WDP0457 for reconnecting leads to terminal blocks.

J. INTERFACE REMOVAL AND REPLACEMENT -- RACK MOUNT

Front Accessibility

Rear Accessibility

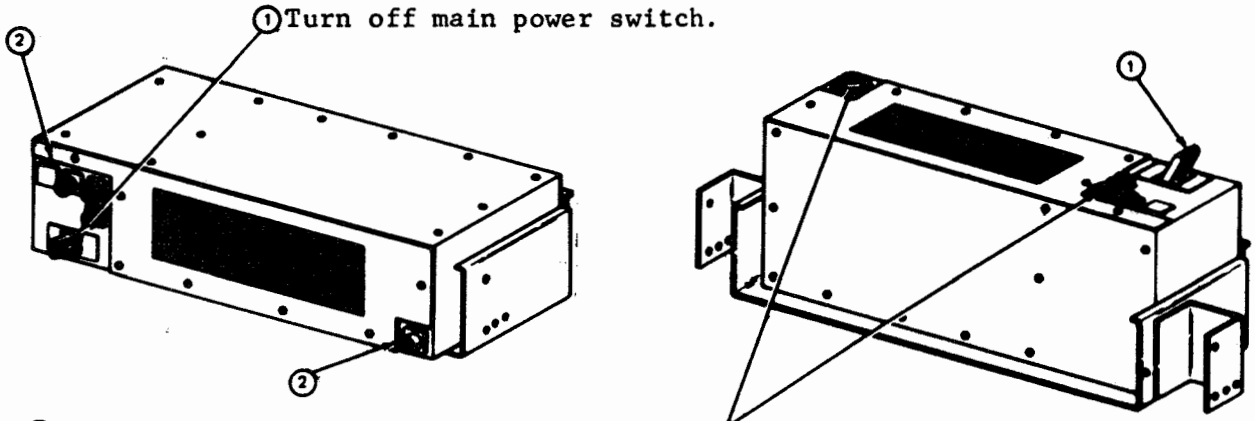

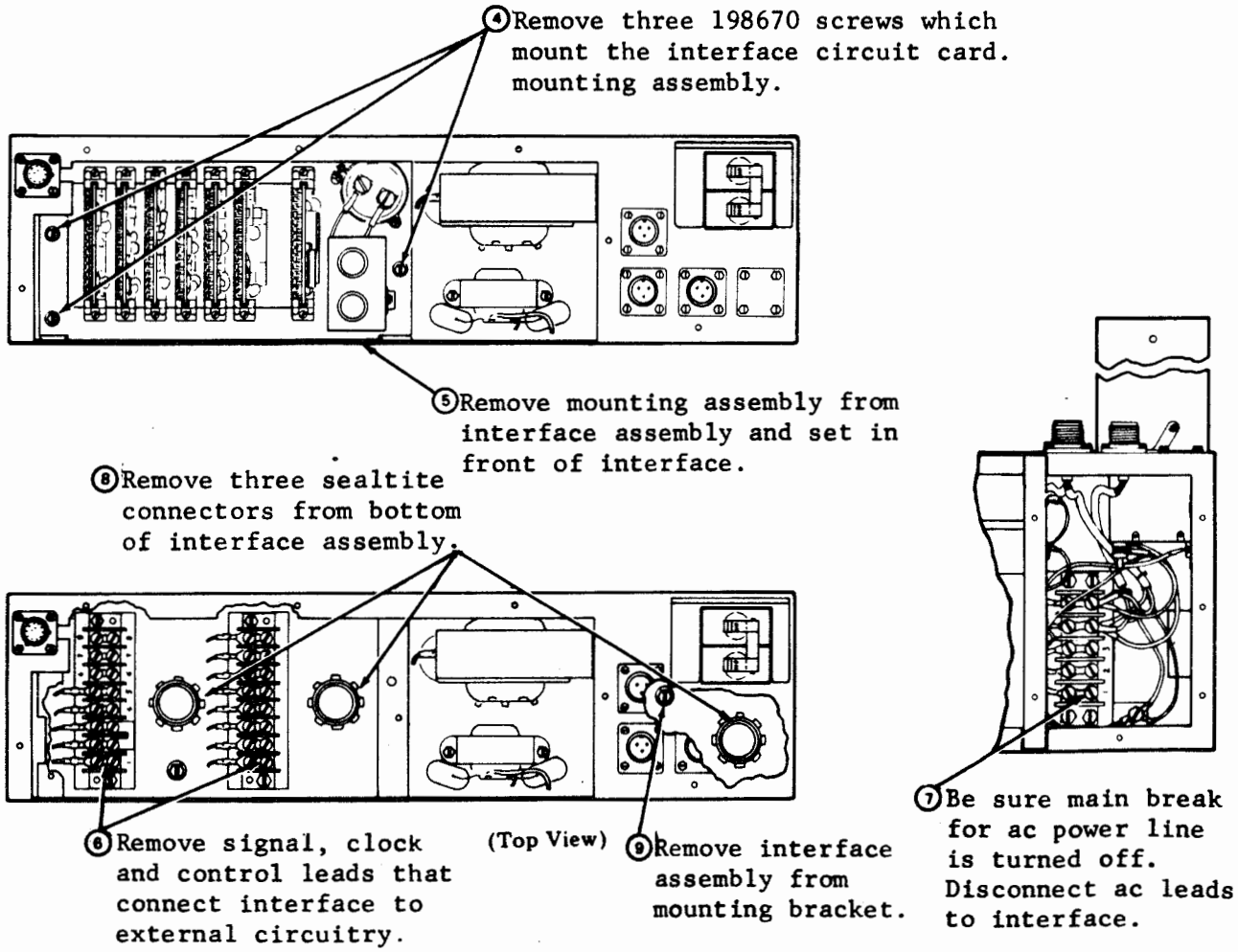

To install interface assembly reverse removal procedures.

K. POWER SUPPLY

DISASSEMBLY/REASSEMBLY

Cover Assembly

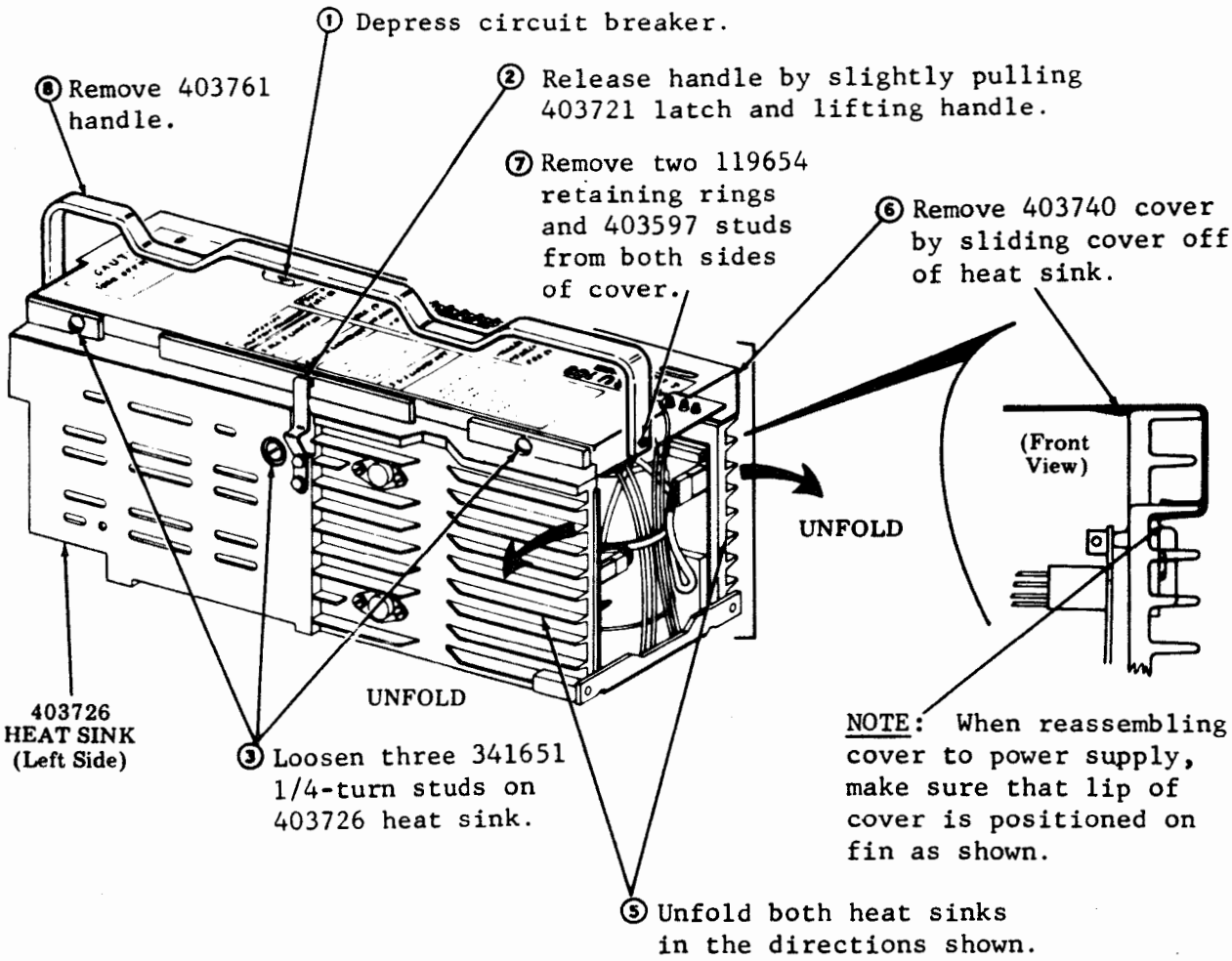

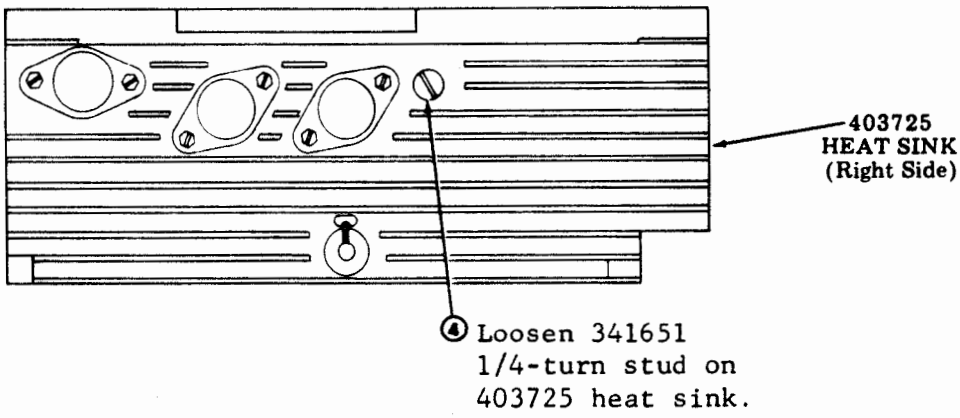

In reassembly, make sure circuit breaker is depressed. See Note above.

K. POWER SUPPLY

DISASSEMBLY/REASSEMBLY

NOTE 1: The number indicated in parentheses after each assembly designates page covering the disassembly/reassembly procedures. Encircled numbers indicate a procedure below.

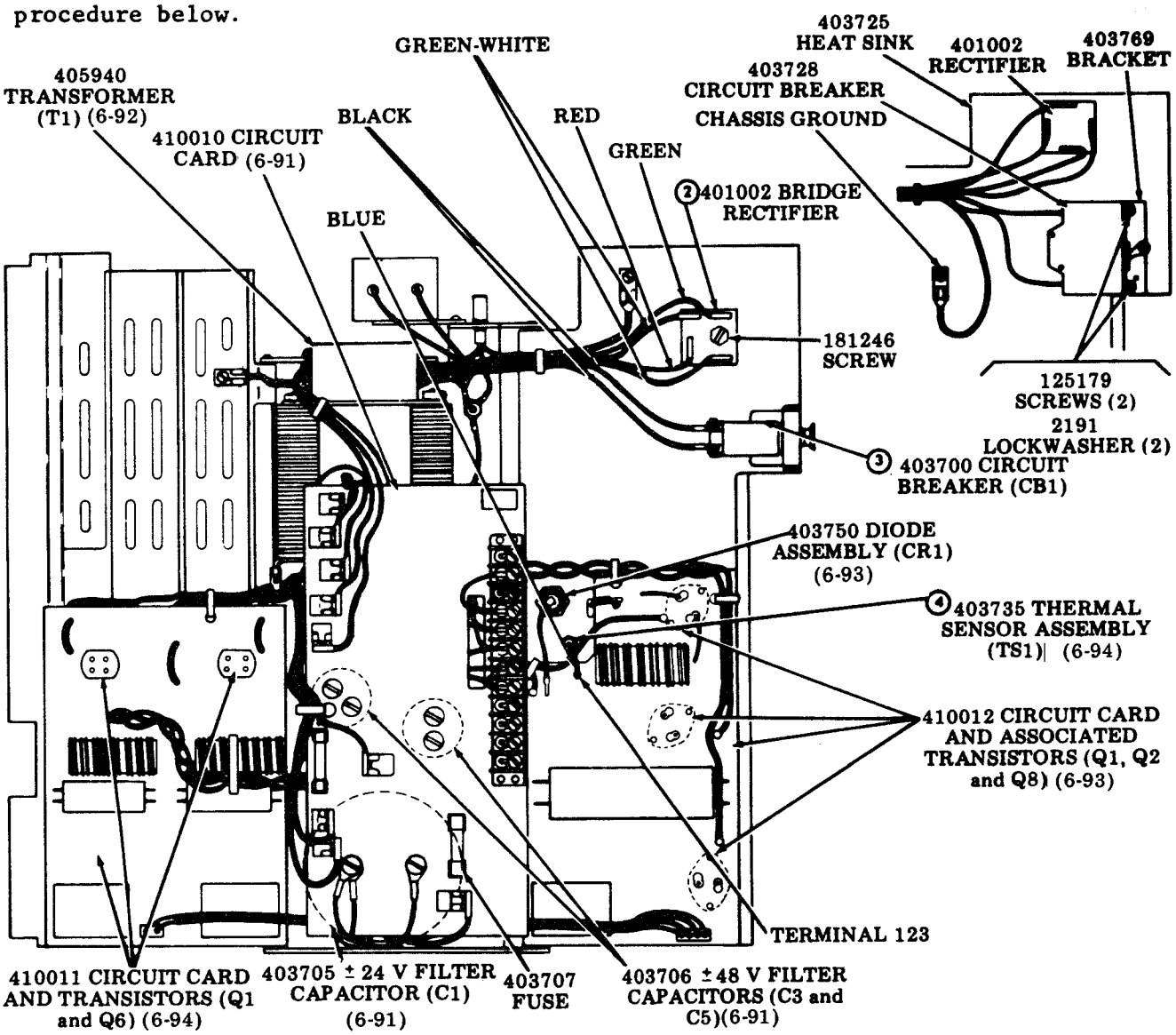

① Remove four screws (supplied with capacitors).

NOTE 2: When reassembling capacitors to 410010 circuit card, make sure that capacitor vents are under holes in circuit card.

② Disconnect leads from bridge rectifier. Remove bridge rectifier from 403725 heat sink by removing 181246 screw.

NOTE 3: In reassembly, apply thermal compound between bridge rectifier and heat sink.

③ Cut and remove RM200137 shink tubing around circuit breaker. Disconnect two black leads to circuit breaker. Remove nut and lockwasher holding circuit breaker to 403745 bracket.

④ Disconnect blue lead of thermal sensor from terminal 123 of 410012 circuit card. Remove thermal sensor by unscrewing from 403725 heat sink.

410010 Circuit Card

- Remove cover assembly (6-89).
- Perform steps 1 through 5.

403705 +24 V Filter Capacitor (C1)

- Remove cover assembly (6-89).
- Perform steps 3, 4, 6 and 7.

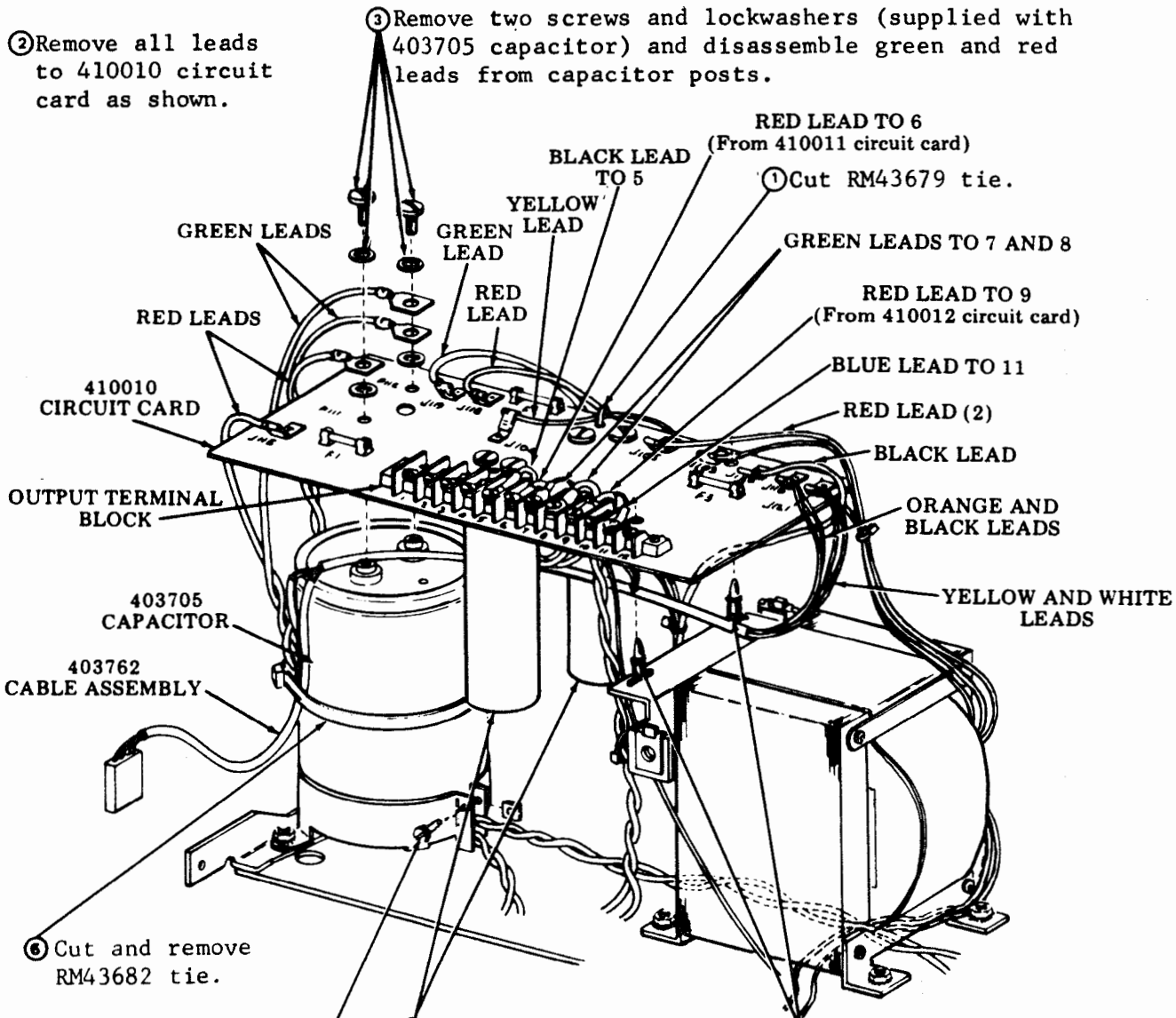

⑥ Cut and remove RM43682 tie.

⑦ Loosen 341798 screw w/lockwasher from 192269 nut. Remove 403705 capacitor by first lifting 410010 circuit card approximately 1-1/2 inches and twisting capacitor upward and out of 403743 capacitor clamp.

⑤ Remove two 403706 capacitors from 410010 circuit card (capacitors are not part of circuit card).

NOTE: When reassembling capacitors to circuit card, make sure that capacitor vents are under holes in circuit card.

④ Using long-nose pliers, compress two 340711 supports and lift 410010 circuit card from power supply.

In reassembly, make sure that all leads are twisted as shown. See Note above.

K. POWER SUPPLY

DISASSEMBLY/REASSEMBLY

405940 Transformer (T1)

•Remove cover assembly (6-89).

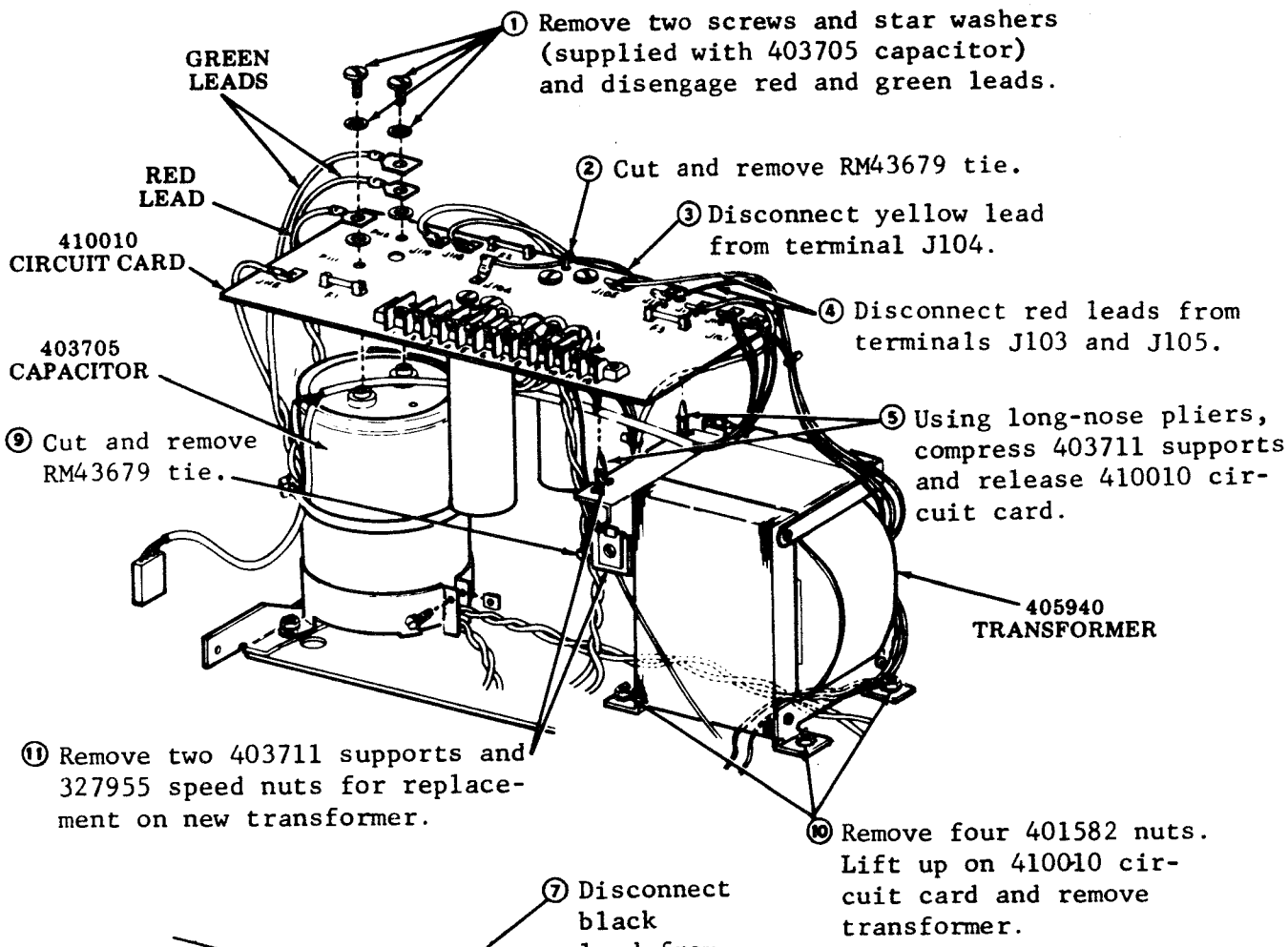

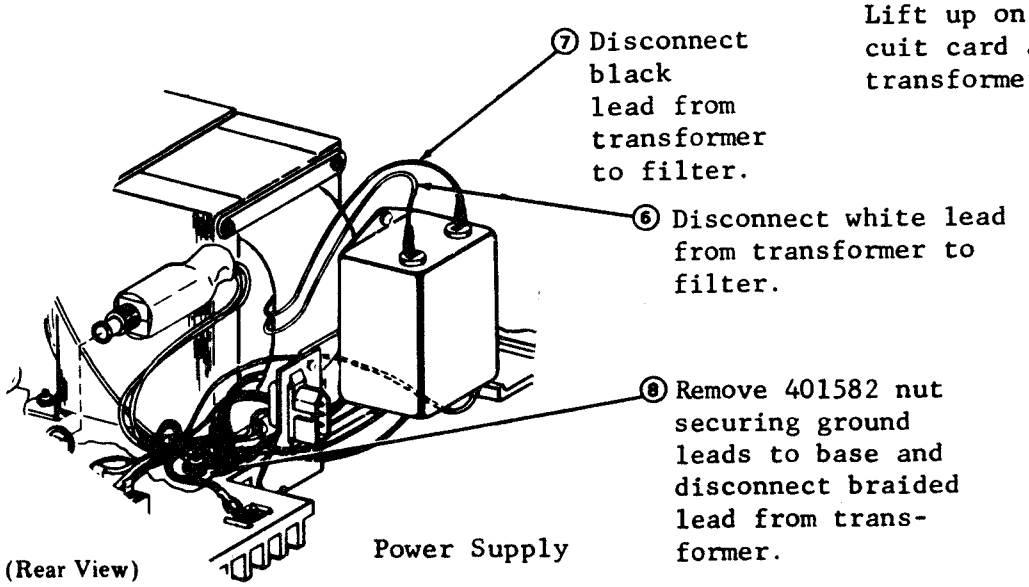

In reassembly, make sure that all leads are positioned and twisted as shown.

410012 Circuit Card -- Associated Transistors (Q1, Q2 and Q8 and 403750 Diode Assembly (CR1)

- Remove cover assembly (6-89).

① Disconnect green and red leads from terminals 8 and 9 of output terminal block.

② Disconnect green lead from terminal P112 and red lead from terminal J115 of 410010 circuit card and route both leads through RM43682 tie.

③ Remove blue lead of 403735 thermal sensor from terminal 123.

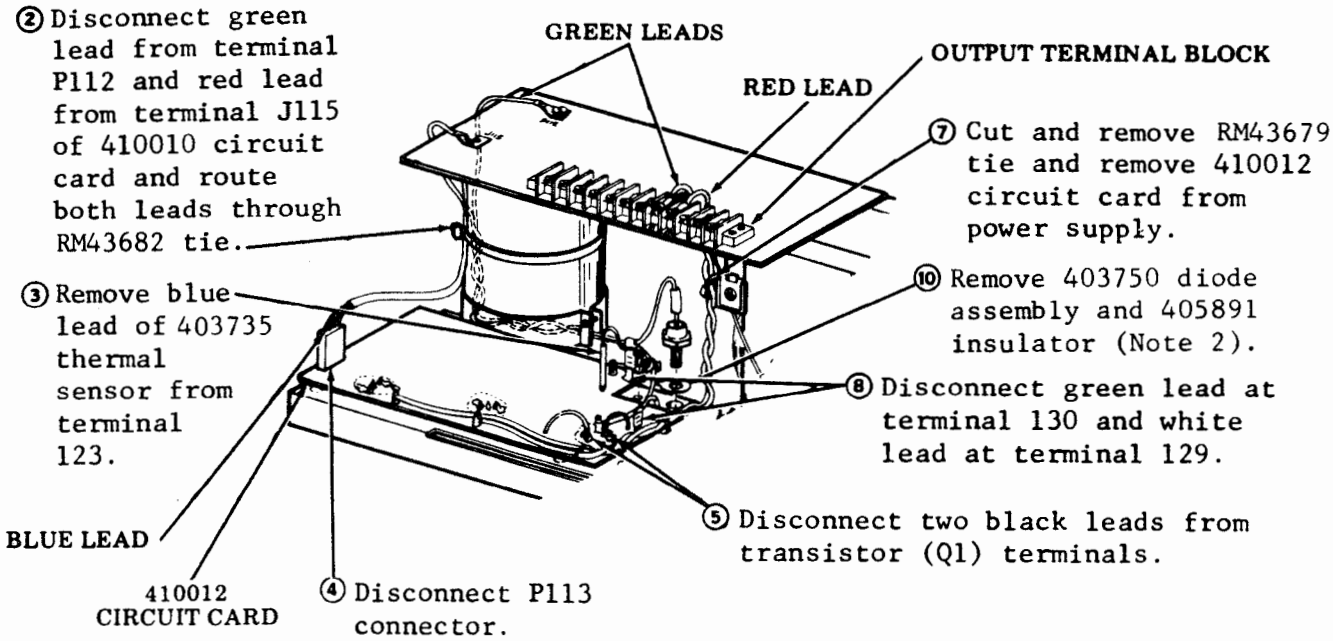

⑦ Cut and remove RM43679 tie and remove 410012 circuit card from power supply.

⑩ Remove 403750 diode assembly and 405891 insulator (Note 2).

⑧ Disconnect green lead at terminal 130 and white lead at terminal 129.

⑤ Disconnect two black leads from transistor (Q1) terminals.

④ Disconnect P113 connector.

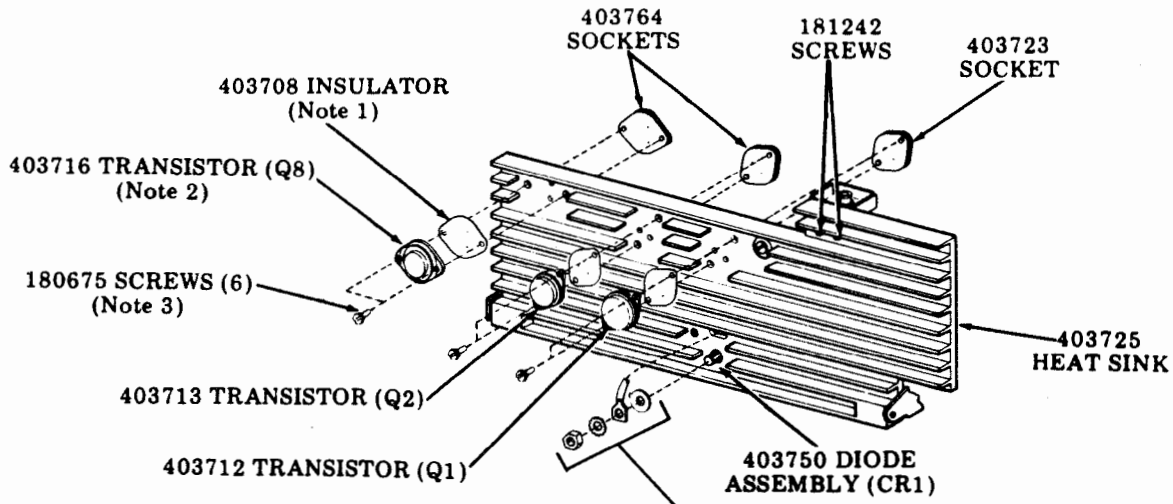

⑥ Remove three transistors (Q1, Q2 and Q8) from 403725 heat sink as shown.

⑨ Remove 334874 nut, 82832 star washer, 403767 cable assembly and 405891 insulator.

NOTE 1: Use new insulators when replacing transistors.
NOTE 2: When replacing transistor or diode, apply thermal compound between new insulator and heat sink.
NOTE 3: Tighten screws to approximately 6 inch-pounds torque to avoid damaging sockets.

In reassembly, make sure all leads are twisted as shown.

K. POWER SUPPLY

DISASSEMBLY/REASSEMBLY

410011 Circuit Card and Associated Transistors (Q1 and Q6)

•Remove cover assembly (6-89).

① Remove 403727 and 403730 transistors (Q1 and Q6) from 403726 heat sink as shown.

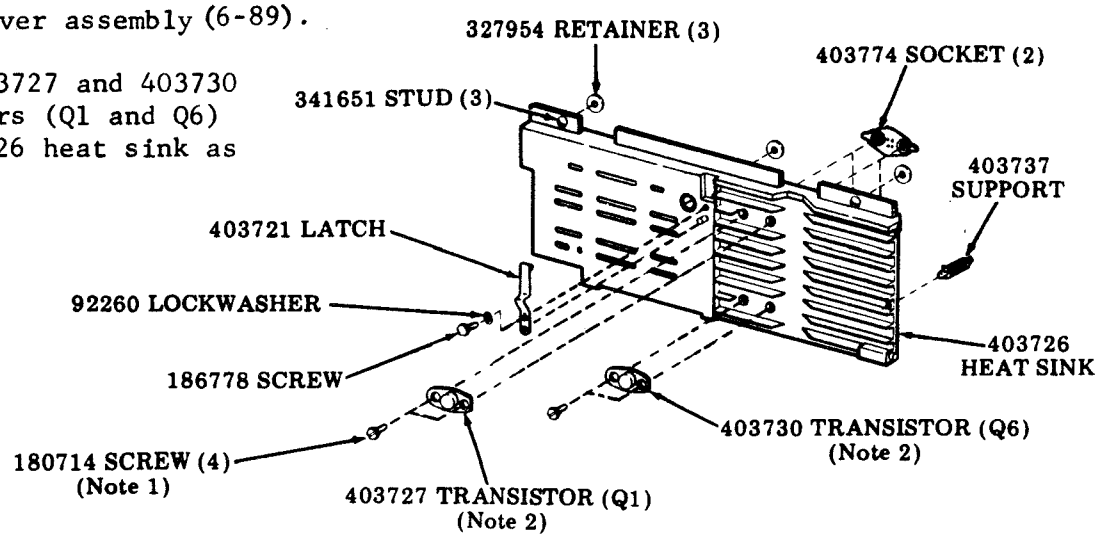

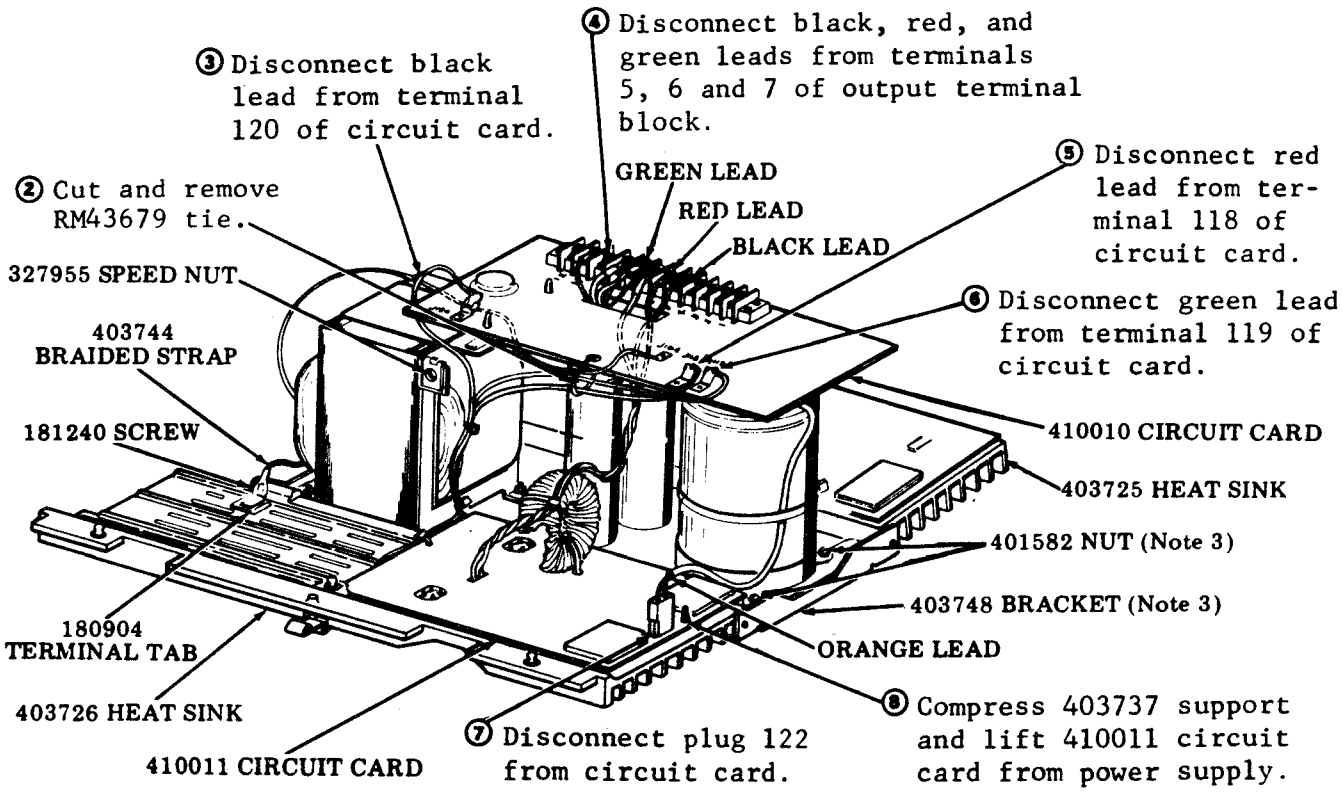

NOTE 1: Tighten screws to approximately 6 inch-pounds torque to avoid damaging sockets.

NOTE 2: When replacing 403727 and 403730 transistors, make sure that flat edges of transistors are facing toward the front of power supply.

NOTE 3: Removal of 403725 or 403726 heat sink can be accomplished by removing two 401582 nuts and removing 403748 bracket. Heat sinks can then be slid forward and out.

PART 7 -- ROUTINE MAINTENANCE

INDEX PAGE

A. GENERAL
1. LUBRICATION 7-2
2. CLEANING 7-2
3. EXPENDABLE ITEMS 7-2

B. CHECK POINTS
1. GENERAL 7-3
2. FAN ASSEMBLY 7-3
3. OPCON 7-3
4. PRINTER 7-3
5. GROUNDING STRAPS AND FUSES. 7-4
6. MONITOR 7-5

C. CLEANING
1. CABINETS AND PEDESTALS 7-11
2. MONITOR 7-11
3. PRINTER 7-11
4. CASSETTE DRIVE 7-11

D. LUBRICATION
1. OPCON 7-12
2. PRINTER 7-12
3. CASSETTE DRIVE. 7-15

E. PRINTER ROUTINE MAINTENANCE
1. GENERAL 7-18
2. TYPE CARRIER REMOVAL AND CLEANING 7-18
3. CLEANING. 7-19
4. CHECKS 7-20
5. PRINTER REASSEMBLY INTO CABINET 7-26
6. CABINET CHECKS. 7-26
7. PRINTER TESTING 7-26

A. GENERAL

Routine maintenance should be performed on the terminal in accordance with the schedule outlined below.

1. LUBRICATION

The printer and the cassette drives should be lubricated just prior to placing them in service. The printer and cassette drives should be relubricated after they have been in service a few weeks. Thereafter, the printer and cassette drives should be relubricated every 2000 hours of running time or six months whichever occurs first. Refer to D. LUBRICATION.

2. CLEANING

The terminal should be cleaned at each lubrication interval except where noted below.

Cassette Drive

(a) The recording head should be cleaned each week. Refer to C. CLEANING for cleaning procedure.

(b) The mating surfaces of the armature and rotor faces should be cleaned at each lubrication interval, except under heavy usage the armature and rotor faces may have to be cleaned more often. Refer to B. CHECK POINTS, 4. OPCON for cleaning procedure.

NOTE: Normal usage of the cassette drive is defined as 1 hour/day tape in motion operation, ie, writing, reading, searching or rewinding and 7 hour/day at idle in data ready mode, 5 days/week.

3. EXPENDABLE ITEMS

NOTE: When ordering replaceable parts or components, unless otherwise specified, prefix each part number with the letters "TP" (ie, TP410055).

For reliable operation it is recommended that the following parts be replaced at the recommended interval.

Printer Ribbon -- The 402444 printer ribbon should be replaced after 25 hours of printing operation or if ribbon is worn (printers without reinker).

Cassette Drive Read/Write Head Assembly -- The 403421 read/write head assembly of the cassette drives should be replaced after 500 hours of tape in motion operation (4000 normal operating hours).

B. CHECK POINTS

1. GENERAL

(a) All connectors are seated properly and securely.
(b) Look for pinched or crimped wires or cables.
(c) Doors and panels open and close properly.
(d) Latches open easily and close securely.
(e) Covers are secure.
(f) Red oxide at any point (Cassette Drive only).

2. FAN ASSEMBLY

(a) Unrestricted flow of air.
(b) Quiet operation.

3. OPCON

No loose keys.

4. PRINTER

Check printed copy for smears.

B. CHECK POINTS (Contd)

5. GROUNDING STRAPS AND FUSES

During servicing or prior to operational checkout, make sure all grounding straps are connected.

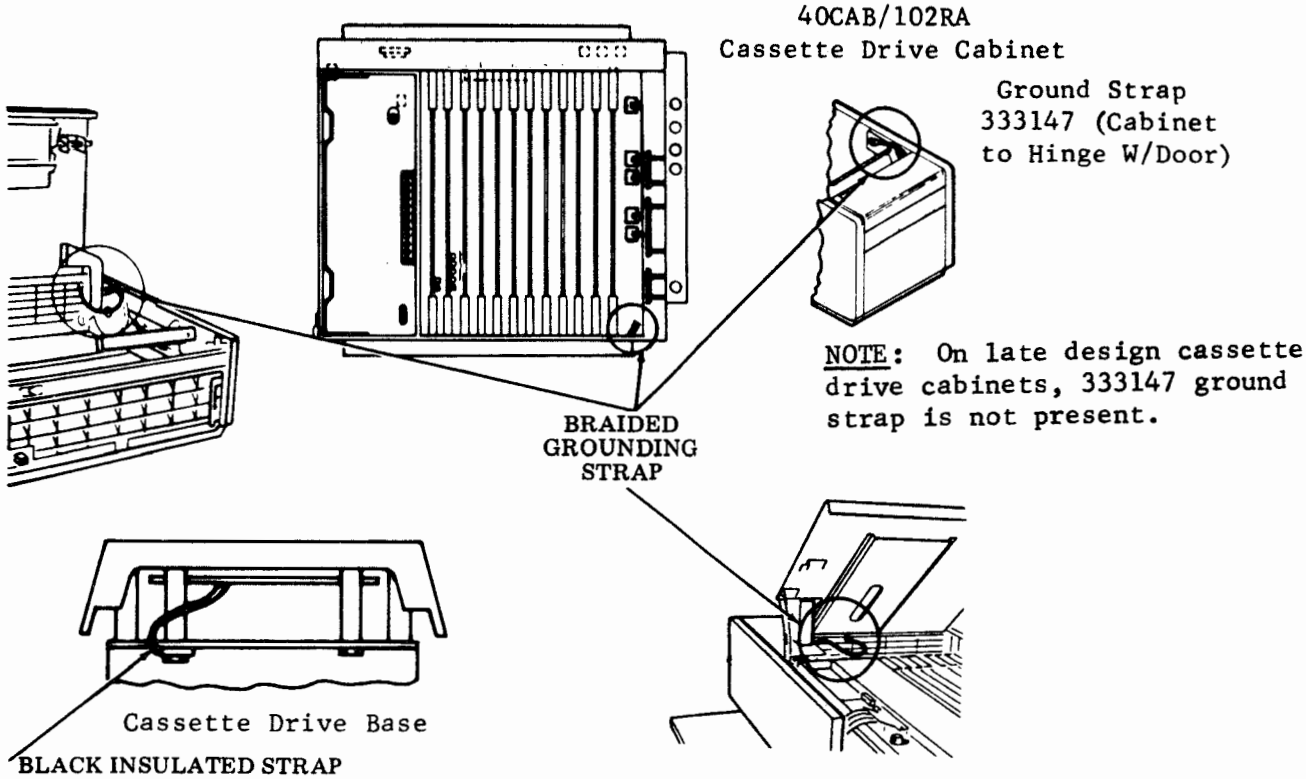

NOTE: On late design cassette drive cabinets, 333147 ground strap is not present.

Check fuses for condition and ratings (fuse ratings are critical; no higher rating than specified should be used).

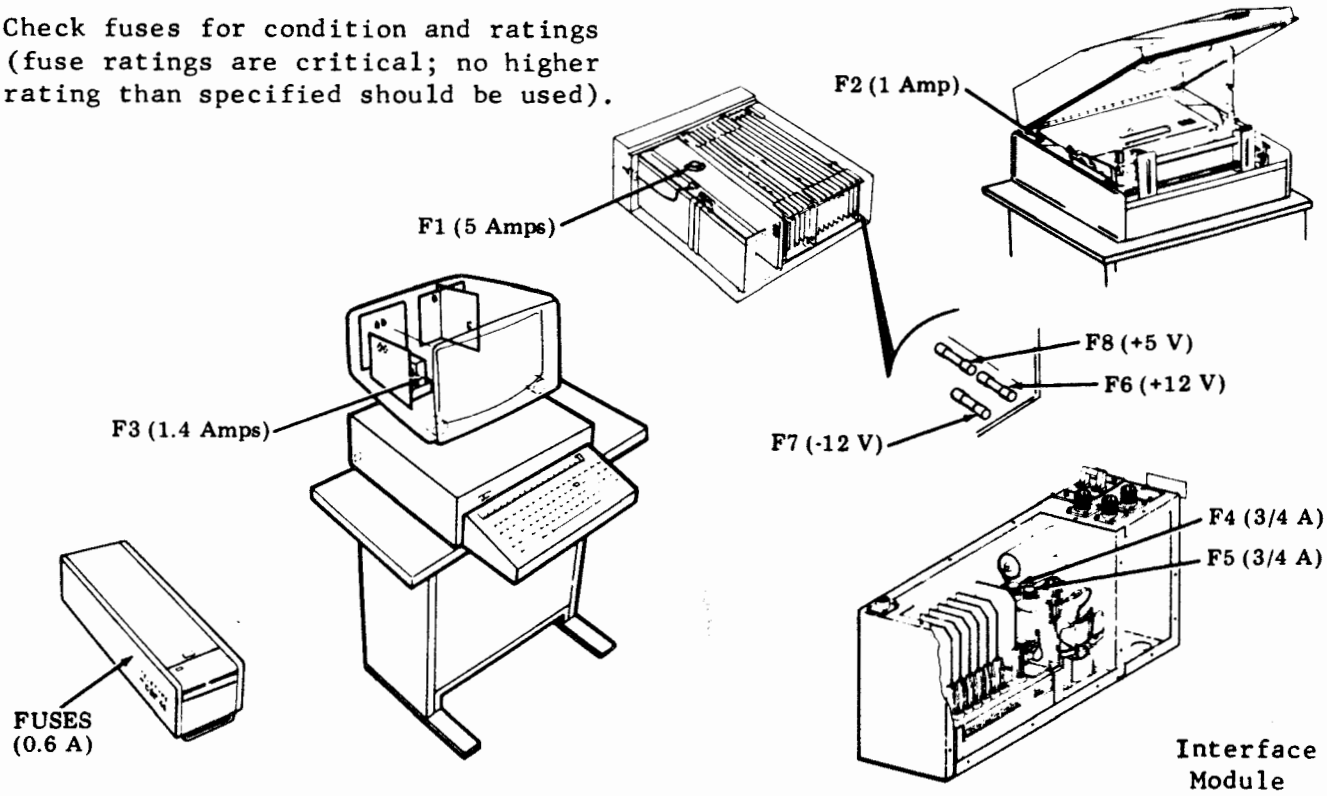

6. MONITOR

(a) Check for excessive buildup of dust.
(b) Ventilating slots are clear.
(c) The requirements on the following pages are recommended checks to be performed by qualified service personnel to maintain proper operation of the monitor. Monitor cover w/shroud assembly should be removed to perform the following checks. (Refer to Page 6-6 for removal procedure.)

PARTIAL TOP VIEW OF MONITOR

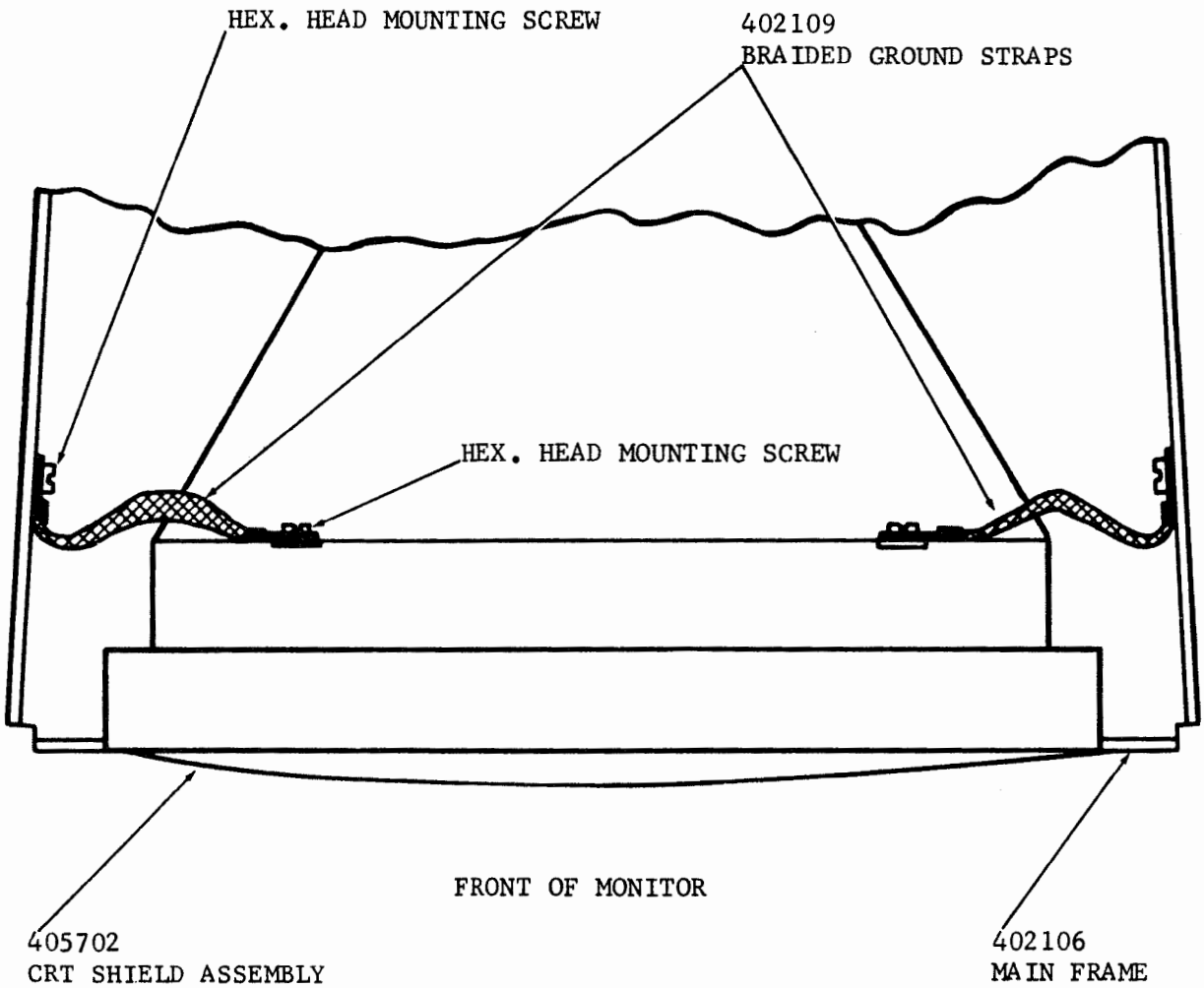

Check that the braided ground straps (402109) are properly mounted from the upper right and upper left side of the CRT tube shield assembly to the right and left side-walls of the main frame (402106).

REAR CRT SHIELD ASSEMBLY

402116

PARTIAL TOP VIEW

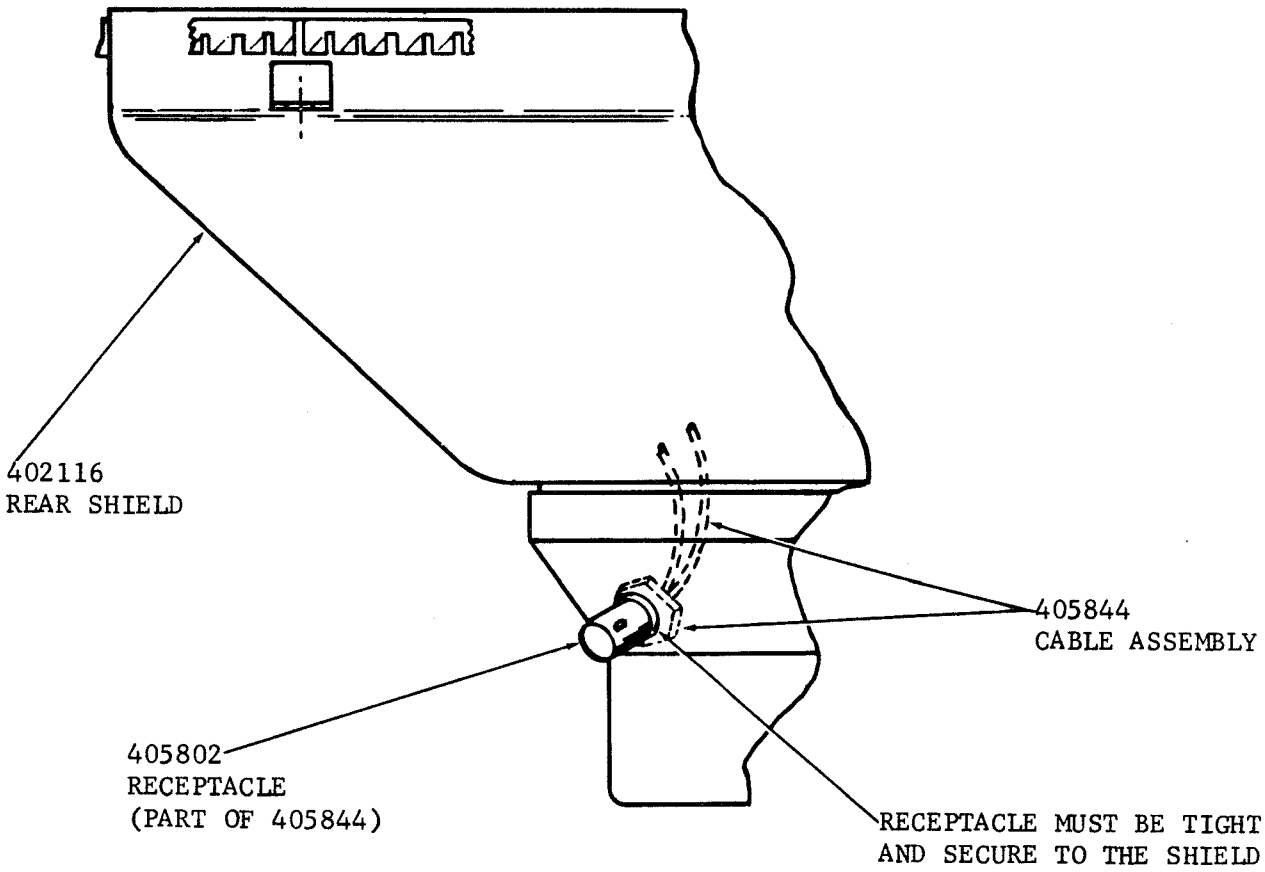

Check that the "Twin-Ax" connector (405802) that mounts on the rear CRT shield (402116) is tight and secure to the shield.

VIDEO AND HIGH VOLTAGE ASSEMBLY

(AS VIEWED FROM REAR OF MONITOR)

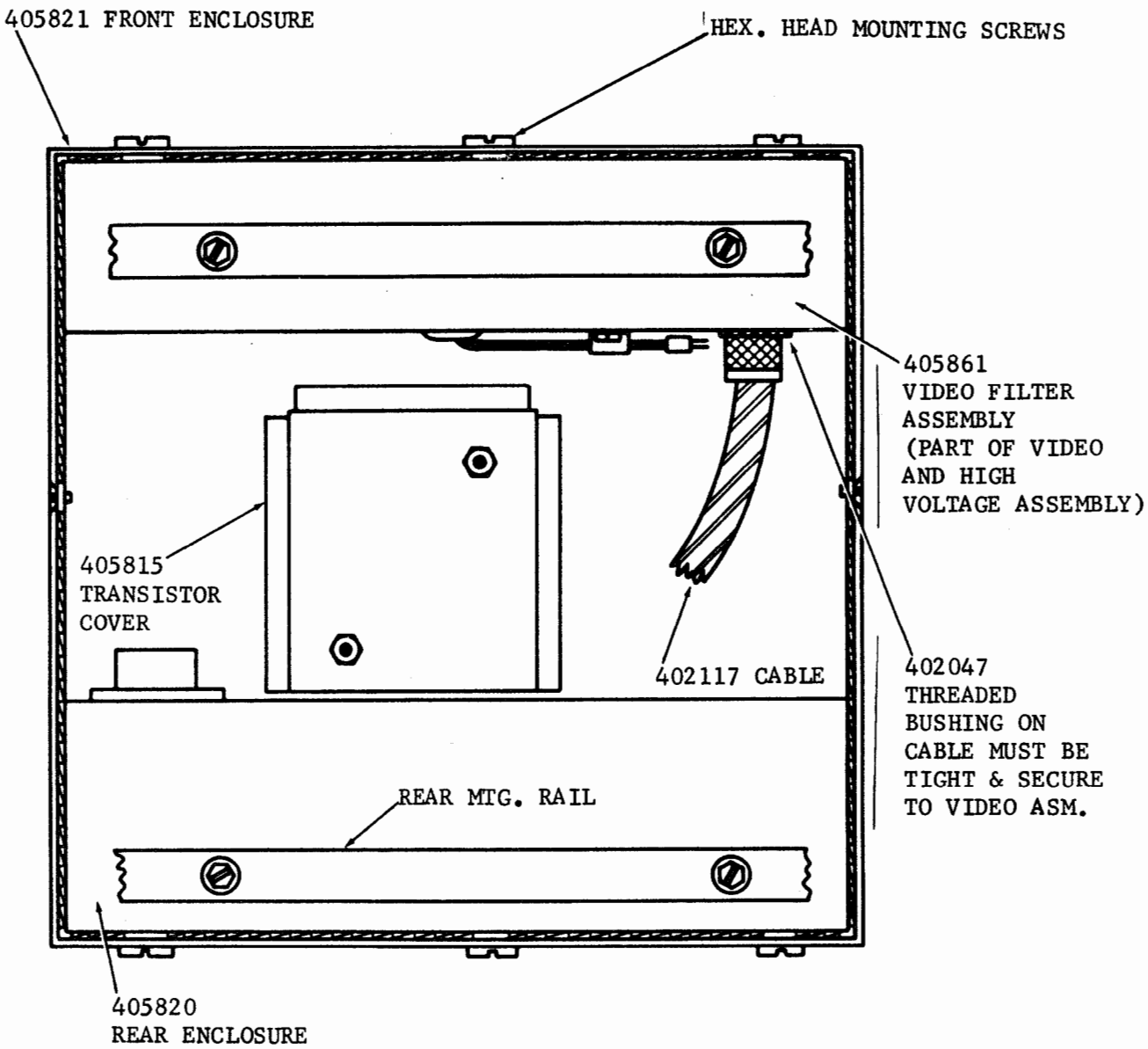

Check that the threaded metallic bushing (402047) on the CRT cable assembly (402117) is tight and secure at the point of entry to the video filter assembly (405861).

LEFT SIDE OF SHIELDED TUBE

(AS VIEWED FROM REAR OF MONITOR)

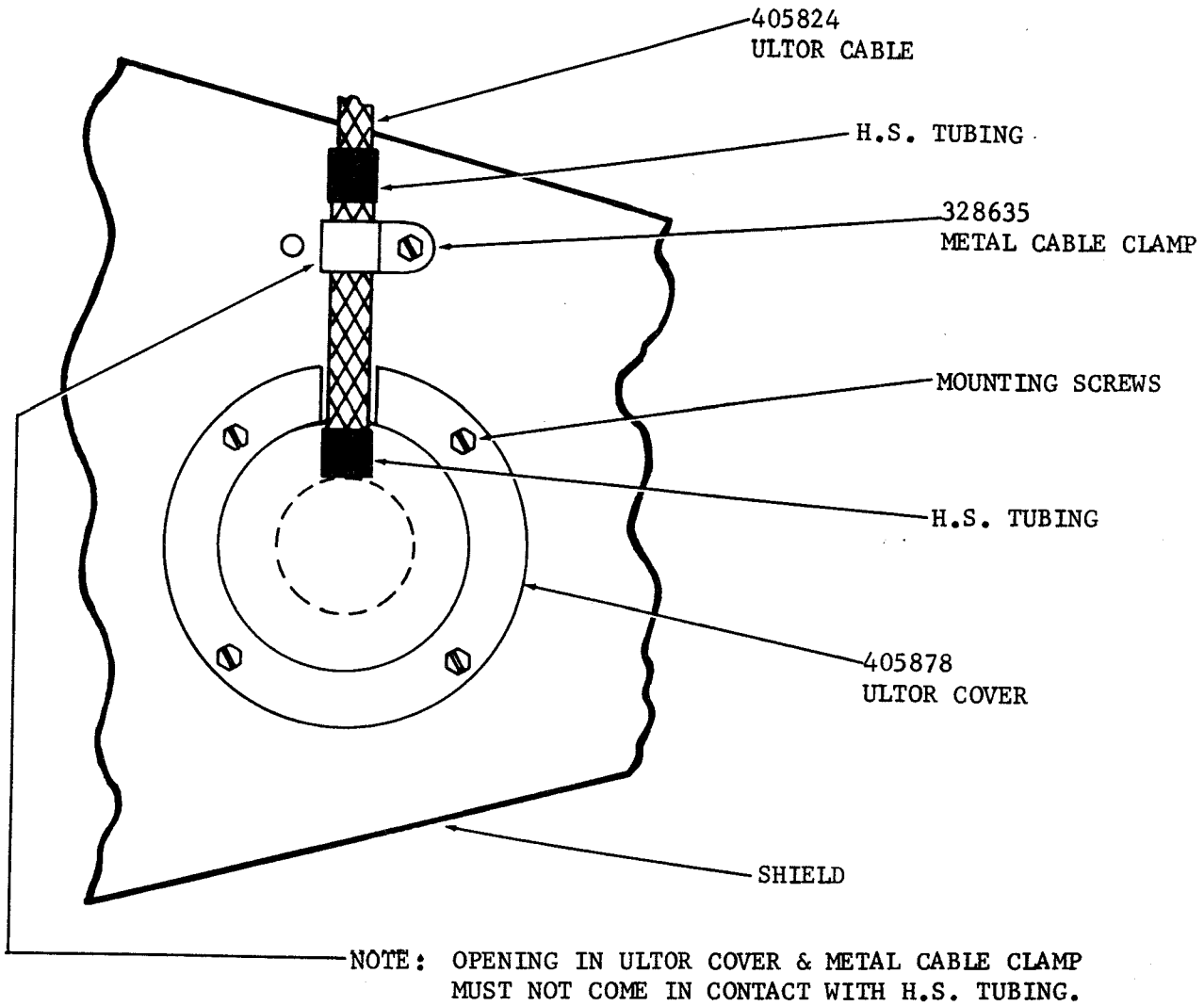

Check that the metal cable clamp (328635) is in total metallic contact with the braid of the ultor cable assembly (405824), and that the braid of the ultor cable assembly (405824) is in metallic contact with the edges of the slot in the ultor cover shield (405878) that covers the connection to the CRT. The shrink tubing on the cable should not prevent metallic contact as indicated above.

SIDE VIEW OF MONITOR

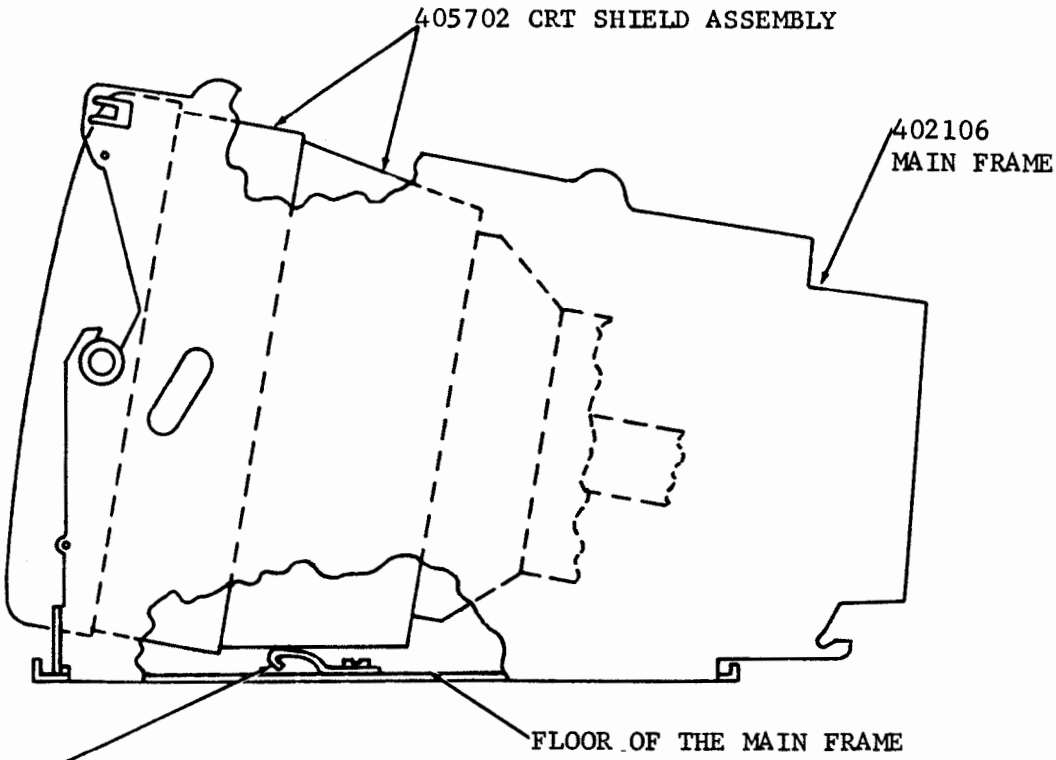

405952 GROUND STRAP MUST BE IN CONTACT WITH CRT SHIELD ASSEMBLY AT ALL TIMES.

Check that the ground strap which is centrally located and mounts to the floor of the main frame (402106) is in direct contact with the CRT shield assembly (405702) at all times.

UPPER REAR CORNER OF THE RIGHT SIDEWALL

OF THE MAIN FRAME

(AS VIEWED FROM REAR OF MONITOR)

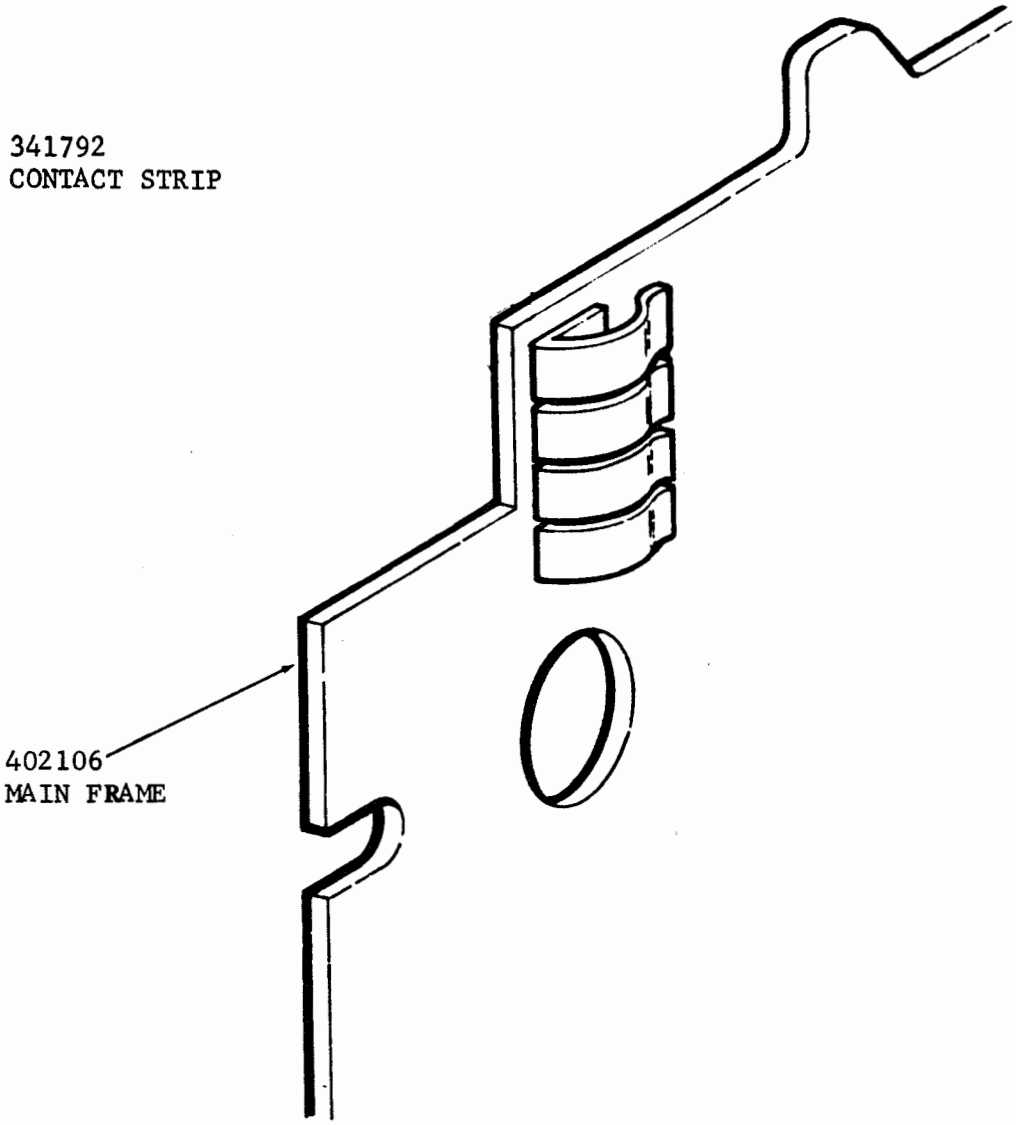

Check for presence of contact strip (341792) which should be mounted on the inside surface in the upper rear area of the right sidewall of the main frame (402106).

C. CLEANING

1. CABINETS AND PEDESTALS

NOTE: Avoid cleaning methods that spread dust and debris to surrounding areas.

Clean all ventilating screens; while vacuuming, use a soft-bristled brush to remove debris.

Clean exterior surfaces:

- Wash with mild detergent solution.
- Rinse with damp cloth.
- Buff dry with soft cloth.

2. MONITOR

CAUTION: BE CAREFUL WHEN WORKING IN AREA OF PICTURE TUBE. KEEP SHARP OBJECTS, THAT COULD SCRATCH TUBE, OUT OF WAY.

(a) Face of tube.
(b) Any dust buildup on outside or inside.
(c) Brush and vacuum interior of the monitor.

DANGER: TURN OFF ALL THE POWER AND SIGNAL SOURCES BEFORE REMOVING OR REPLACING ANY COMPONENT. WEAR APPROVED SAFETY GLASSES WHEN THE HOUSING OF THE MONITOR IS REMOVED, AS THE DISPLAY TUBE IS FRAGILE IN THE NECK AREA AND IS SUBJECT TO IMPLOSION IF BROKEN. BE CAREFUL NOT TO STRIKE THE GLASS OF THE TUBE WITH TOOLS OR COMPONENTS WHEN WORKING IN ITS VICINITY.

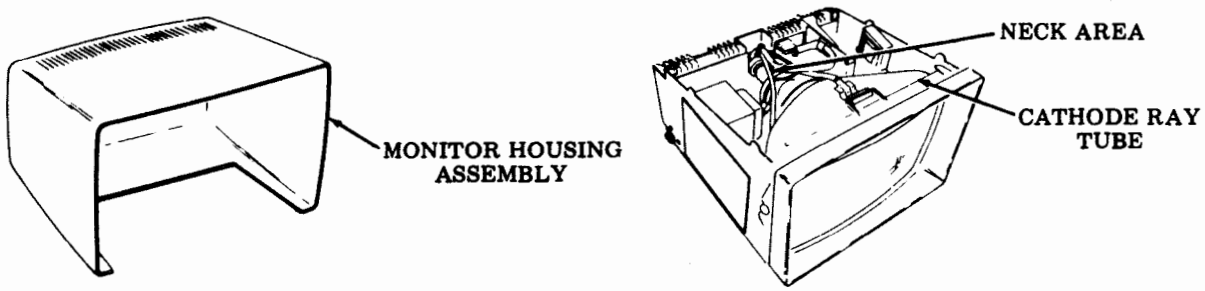

3. PRINTER (See Page 7-19), E. PRINTER ROUTINE MAINTENANCE, 3. Cleaning.)

(a) Type faces.
(b) Paper chute.
(c) Paper roller.

4. CASSETTE DRIVE

(a) Using 337401 recording head cleaner and a cotton swab, the tape head, hub drivers and cassette locating pins should be cleaned each week or sooner if dirt or oxide deposits are detected on the hub drivers and locating pins.
(b) Mating surfaces of the armature and rotor faces; place a small piece of paper saturated with 337401 recording head cleaner between the armature and rotor faces of each clutch assembly; apply pressure to each face; withdraw paper from between the armature and rotor. Repeat for each pole face until the withdrawn paper is clean. Under heavy usage the armatures and rotor faces should be cleaned twice between each service interval.
(c) The 403238 tape cleaner should be replaced once at every service interval, after normal usage. Under heavy usage, it should be replaced twice between service intervals.

D. LUBRICATION

1. OPCON

Never lubricate the keyswitch assemblies on the operator console.

2. PRINTER

The printer can be lubricated by positioning it in the ribbon changing (maintenance) position.

Lubricate the printer just prior to placing in service or before putting it in storage. Thereafter, lubricate the mechanisms every 2000 hours of running time.

Apply lubricant to points as indicated.

On small parts, a minimum amount of lubricant should be applied so that the lubricant remains on the parts and does not run off.

Excessive lubricant should be removed with a dry, lint-free cloth.

The following areas must be kept dry, free of all lubricant:

(a) All electrical components, including terminals.
(b) All parts normally touched by the operator, including exposed surfaces in ribbon, paper handling areas, and all large flat areas.

The following symbols indicate the quantity of lubricant to be used in a specified area: Symbols 01, 02, 03, etc, refer to 1, 2, 3, etc, drops of oil. The following list of symbols apply to the lubrication instructions and the type of lubricant to be used:

0 Oil 88970
G Apply thin film of 145867 grease.
S Saturate felt oilers, washers, and wicks with oil.
D Keep dry, no lubricant permitted.

CAUTION: SEVERE PERMANENT DAMAGE TO THE SINTERED TYPE AND SHIELDED TYPE BEARINGS ON THIS UNIT WILL OCCUR IF THE PRINTER IS SUBJECTED TO VAPOR DEGREASING, DEGREASING AGENTS, SUBMERGED IN DETERGENT SOLUTIONS, OR SPRAYED OR WIPED WITH CLEANING SOLVENTS OF ANY KIND.

Lubrication -- Front Top

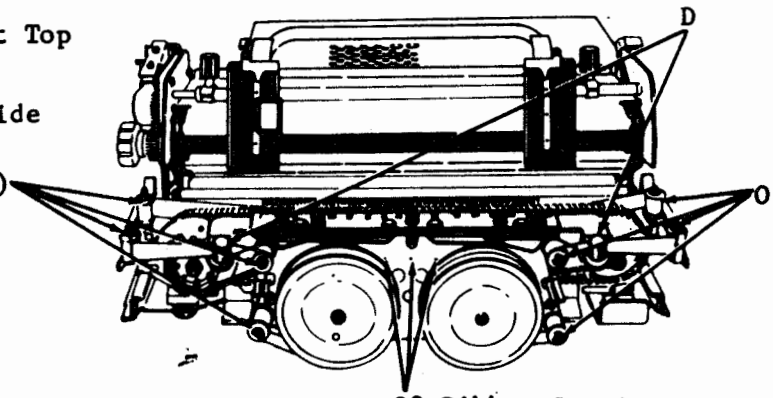

Lubrication -- Left Side

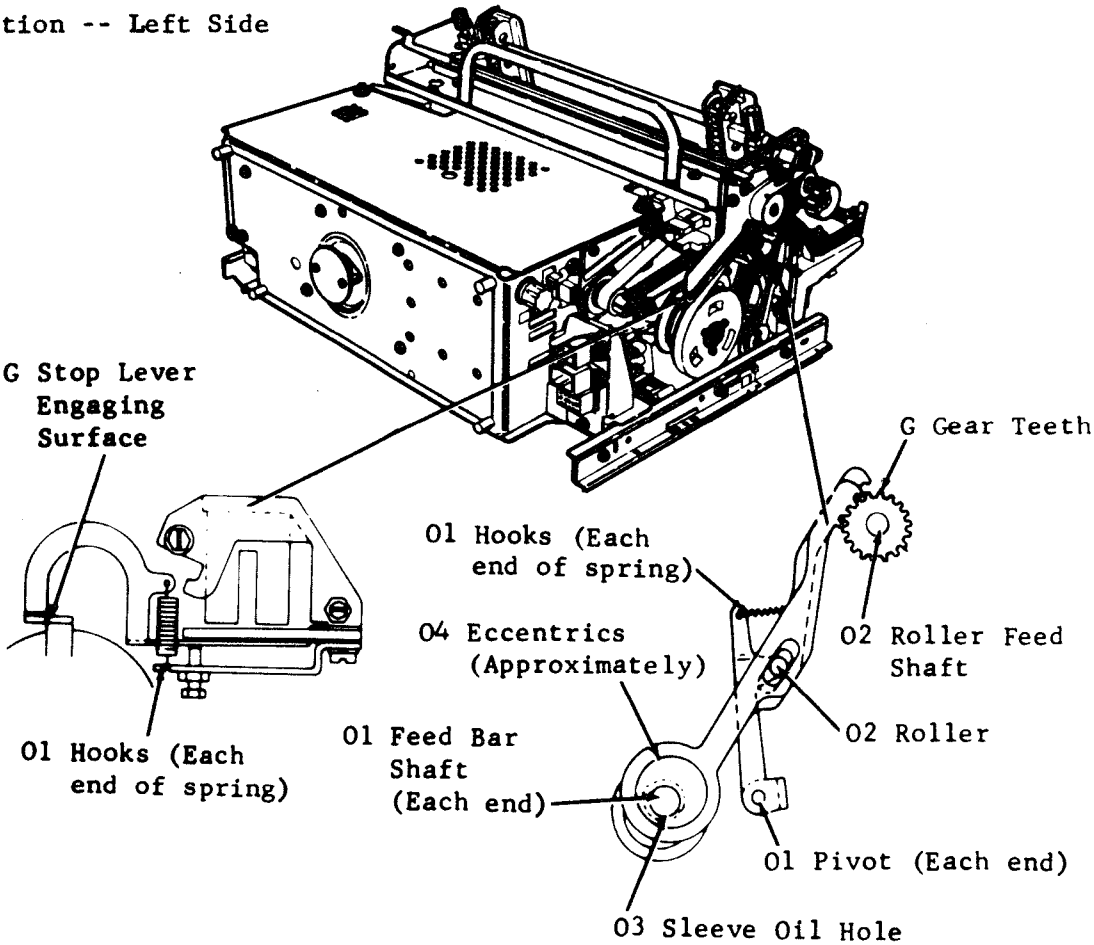

Lubrication -- Right Side

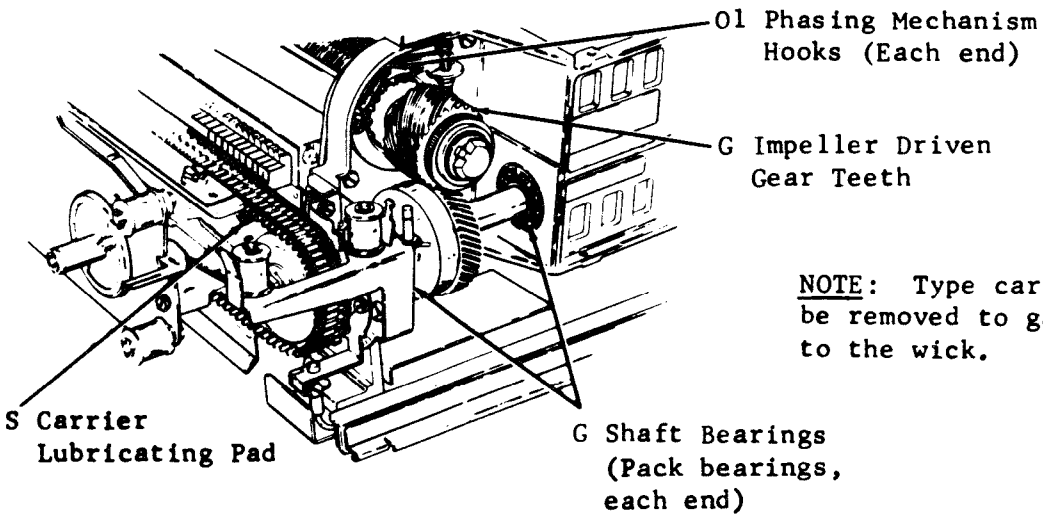

NOTE: Type carrier must be removed to gain access to the wick.

D. LUBRICATION (Contd)

2. PRINTER, Lubrication -- Left Side (Contd)

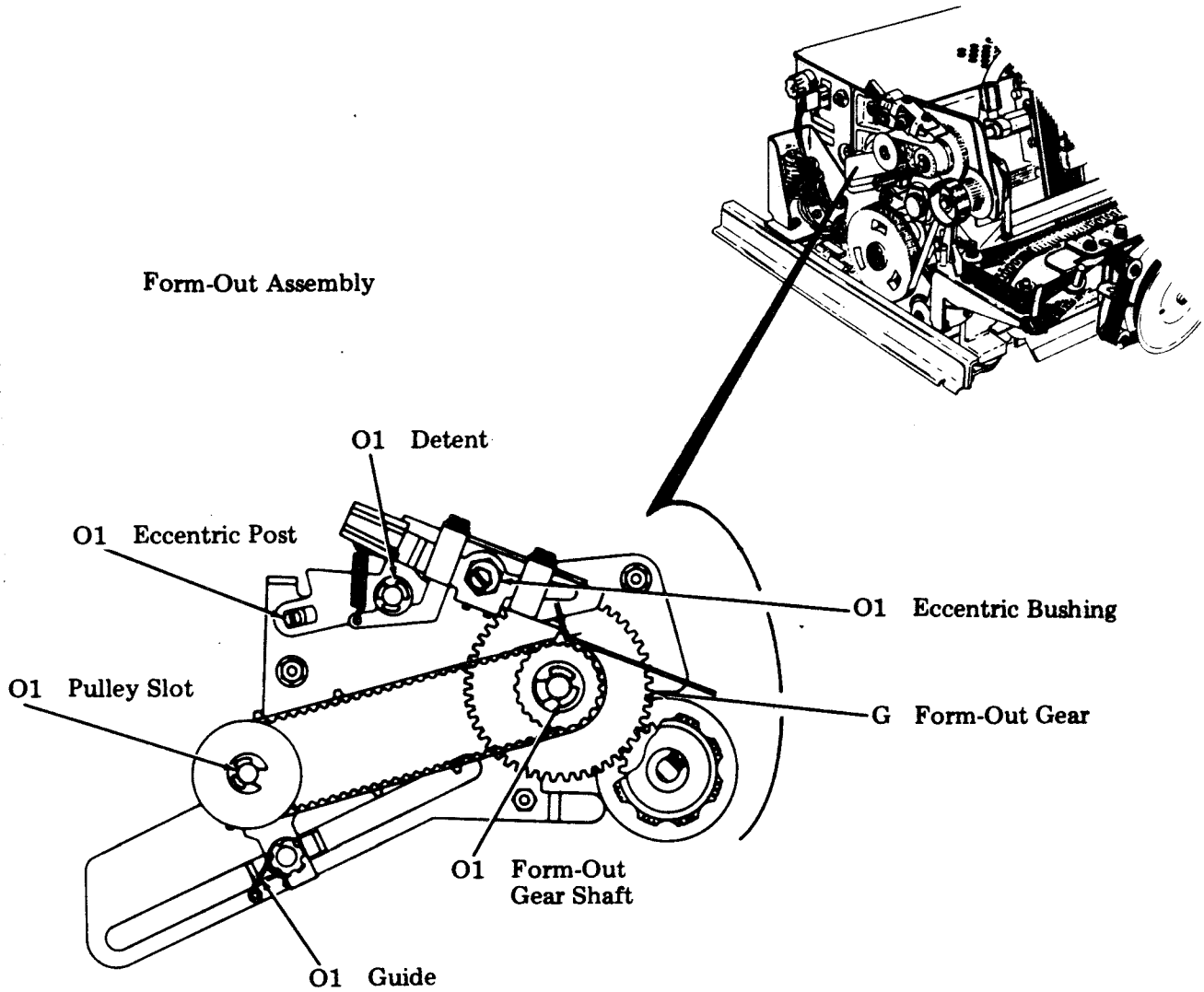

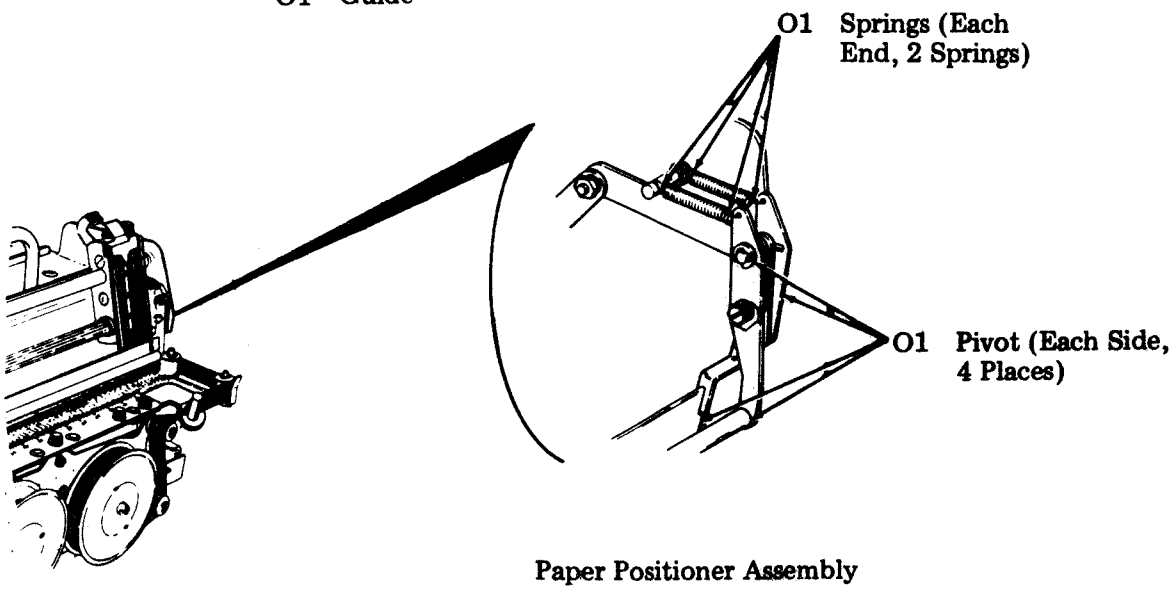

3. CASSETTE DRIVE

Lubricate the cassette drive just prior to placing in service or before putting it in storage. The cassette drive should be relubricated after it has been in service a few weeks. Thereafter, relubricate every 2000 hours of running time or 6 months, whichever occurs first.

Apply lubricants to points as indicated.
On small parts, a minimum amount of lubricant should be applied so that the lubricant remains on the parts and does not run off.
Excessive lubricant should be removed with a dry, lint-free cloth.

The following areas must be kept dry, free of all lubricant:

All electrical components, including terminals.
All parts normally touched by the operator, including exposed surfaces in the cassette holder area and all large flat areas.
Reading head.
Surfaces of the tape cleaner which contact the magnetic tape.
Friction surfaces of the magnetic clutches.

The following symbols indicate the quantity of lubricant to be used on a specified area: Symbols 01, 02, 03, etc., refer to 1, 2, 3, etc., drops of oil. The following list of symbols applies to the lubrication instructions and the type of lubricant to be used:

O Oil (88970)
G Pack grease between nylon bushings (143484--one pound can or 145867 4-ounce tube)
D Keep dry, no lubricant permitted.

D. LUBRICATION (Contd)

3. CASSETTE DRIVE (Contd)

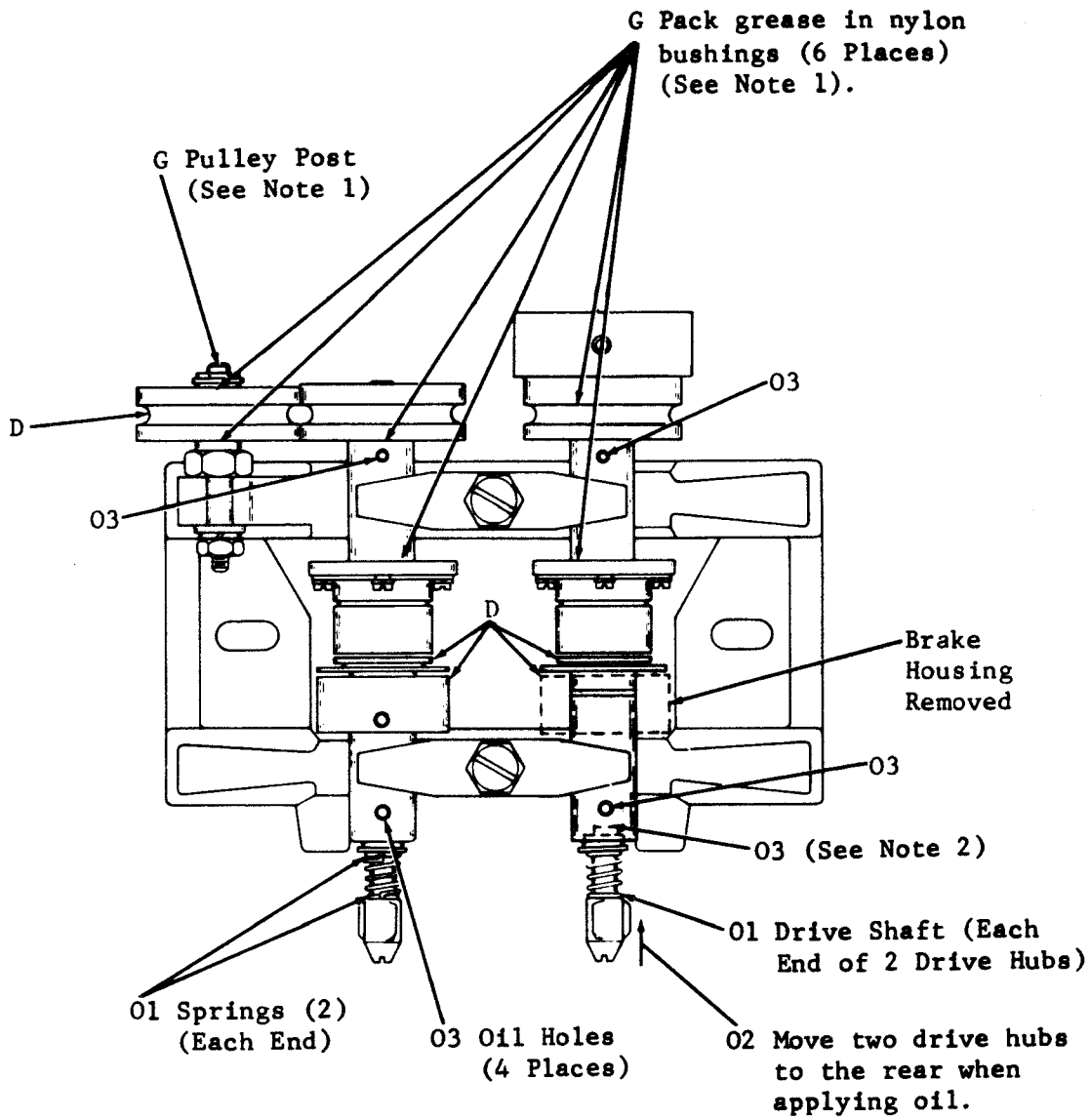

NOTE 1: These nylon bushings should be greased only when the unit is reassembled.

NOTE 2: These nylon bushings (4) and fiber friction washer (4) should be oiled (03 drops), whenever a nylon bushing or a friction washer is replaced.

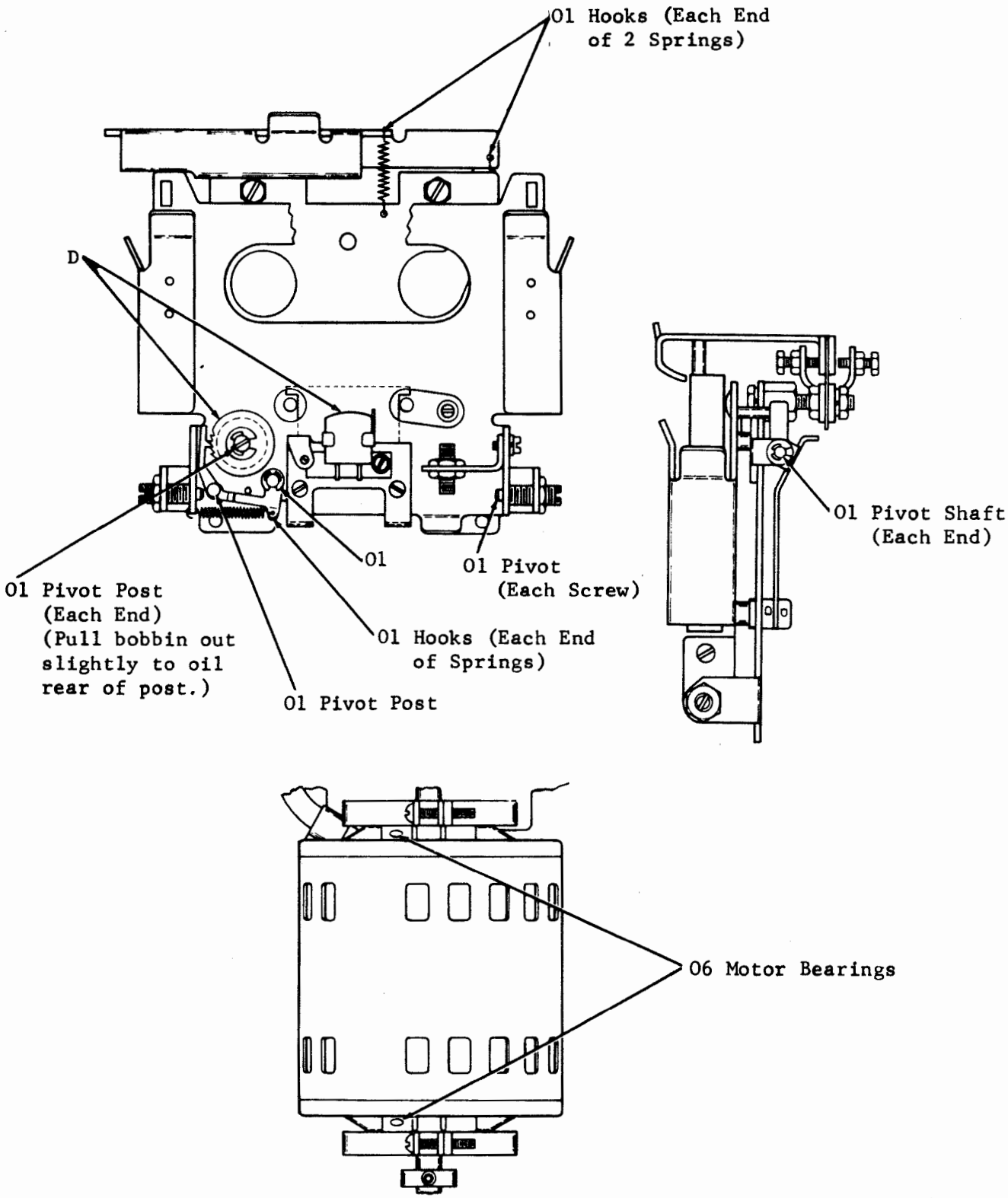
01 Hooks (Each End of 2 Springs)
D
01
01 Pivot (Each Screw)
01 Pivot Post (Each End) (Pull bobbin out slightly to oil rear of post.)
01 Hooks (Each End of Springs)
01 Pivot Post
01 Pivot Shaft (Each End)
06 Motor Bearings

E. PRINTER ROUTINE MAINTENANCE

1. GENERAL

Printer

Routine maintenance on the printer should be performed after 2000 hours of running time or one year. Printer should be removed from the cabinet before routine maintenance is begun. See PART 6 -- COMPONENT ACCESS for printer removal.

- To prevent damage to furniture, the printer should be placed on a pad such as 124828 protective pad, or other suitable substitute.

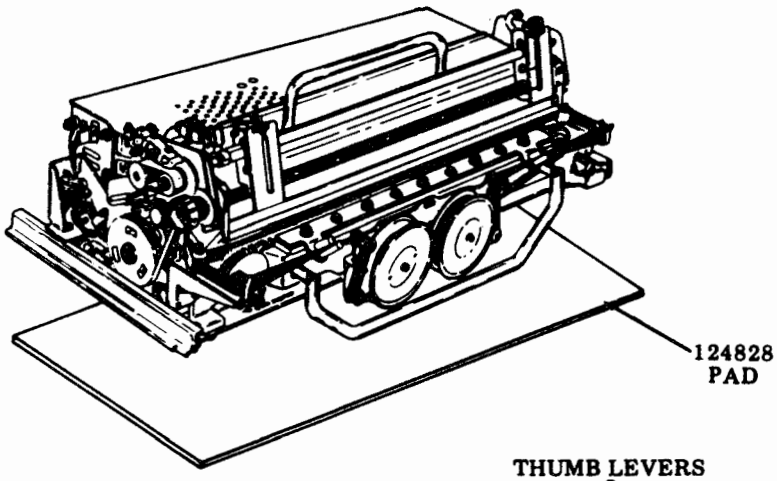

- Remove the ribbon.

2. TYPE CARRIER REMOVAL AND CLEANING

Ribbon Guide Brackets

- Release thumb levers on left and right ribbon guide brackets allowing guides to spring to sides of printer.

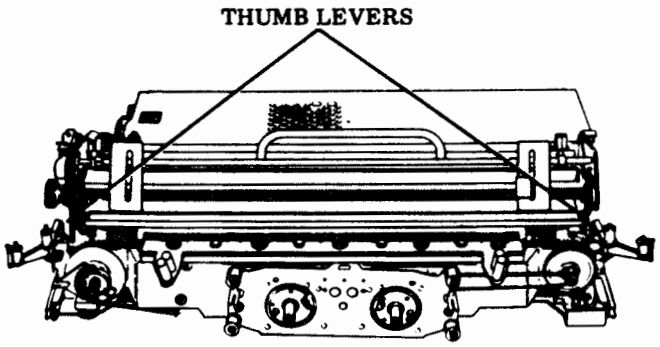

Carrier Top Guide

- Remove three thumbscrews and lock-washers securing carrier top guide; remove guide.

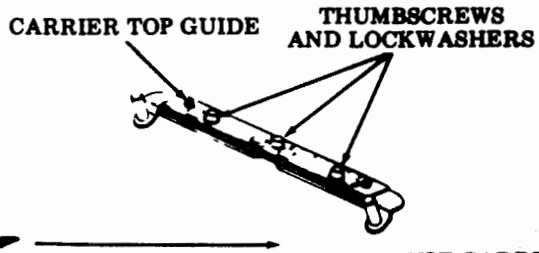

Type Carrier Removal

- Lift finger lever on left pulley and hold. Remove type carrier starting at right pulley as shown. (Release finger lever.)

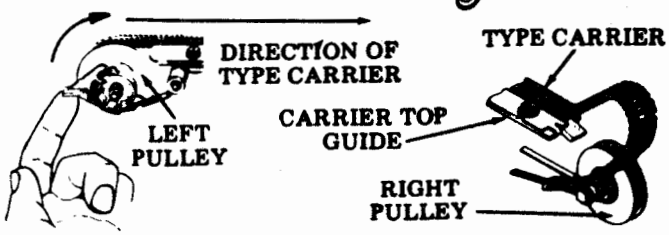

- Clean type carrier with brush and mineral spirits. Care should be taken that the customer's furniture is not damaged. Inspect type carrier. Replace any pallets that are worn, missing, or mutilated. Set type carrier aside.

3. CLEANING

- Check that the printed instructions on the printer cover are legible. Clean with cloth.

Label for Form Selection

Form Selector Setting				Color of Belt
4	3	2	1	
Length of Form				
3-1/3	2-1/2	5	10	Amber
3-2/3		5-1/2	11	Blue
4	3	6	12	Yellow
4-1/3		6-1/2	13	Brown
4-2/3	3-1/2	7	14	Red
5		7-1/2	15	Pink
5-1/3	4	8	16	Lt Green
5-2/3		8-1/2	17	Green
6	4-1/2	9	18	Lt Blue
7-1/3	5-1/2	11	22	White

Label for Ribbon Loading

1. Ribbon is to wind and unwind at bottom of spool.
2. Put new spool on free-wheeling spindle.
3. Using routing shown, pass ribbon between paper and type carrier.
4. Attach ribbon to empty spool and wind until eyelet is on spool.
5. Put spool on spindle and wind up slack on free-wheeling spool.

Label for Type Carrier Changing

1. Remove ribbon and swing ribbon guides out by pressing thumb levers.
2. Lift finger lever and remove carrier starting at right pulley.
3. Install new carrier starting at left pulley; follow above instruction in reverse.
4. Rotate carrier by hand in direction shown, aligning any protruding type pallets to prevent snagging.
5. Option switch selection should agree with font arrangement of type carrier.

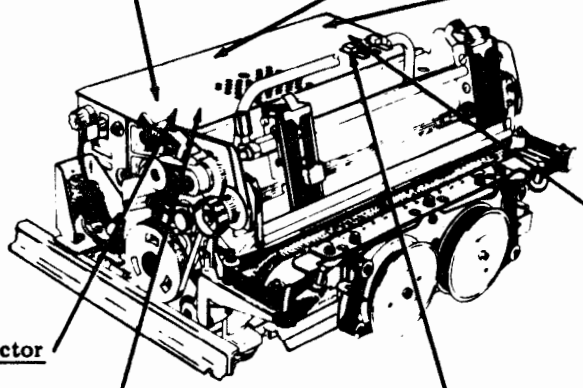

Label for Form Selector

Depress when changing belts.

Label for Idler Assembly

Loosen and move thumbscrew until idler assembly is approximately at right angles to slot.

Label for

FORMS	LF	TEST
ON	1	ON
↕	↕	↕
OFF	2	OFF

Label for Paper Loading

1. Release paper guides and open tractors.
2. Fold one form down; if multiple forms, separate.
3. Sight down paper path and thread paper, keeping to the left.
4. Close tractors and paper guides.
5. Set right tractor for paper width.
6. Set left tractor for left margin.
7. Pull knob and turn to align form.

E. PRINTER ROUTINE MAINTENANCE (Contd)

3. CLEANING (Contd)

Line Feed Magnet

- Place a piece of cleaning paper between the line feed armature and pole piece; manually hold the armature against the pole piece and pull the paper out. Perform the operation twice. Discard paper.

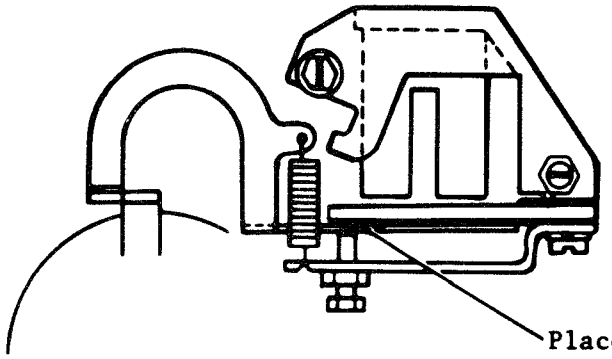

- Clean with a brush, dust and paper lint that has accumulated on the printer, inside the paper chute, on the sides, and on the front. Make sure furnishings are not damaged.

4. CHECKS

Printer Cross Shaft

- Check the fiber gear on the cross shaft for worn or chipped teeth. Check for red oxide around the bearings. At the bearings check that the inner roll does not turn on the shaft. If it does, replace the shaft. Check for play in the shaft by lifting up and down. Check for worn, dented, or pitted teeth on the right pulley. If any of these conditions exist, replace printer.

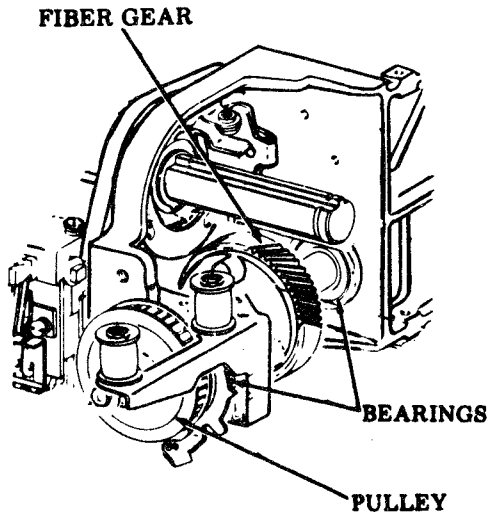

Ribbon Rollers

- Check for worn, chipped or cracked ribbon rollers; replace if necessary.

Tractor feed printers should be equipped with new style rollers. Check that the new style rollers have been properly installed with the groove and bulge downward.

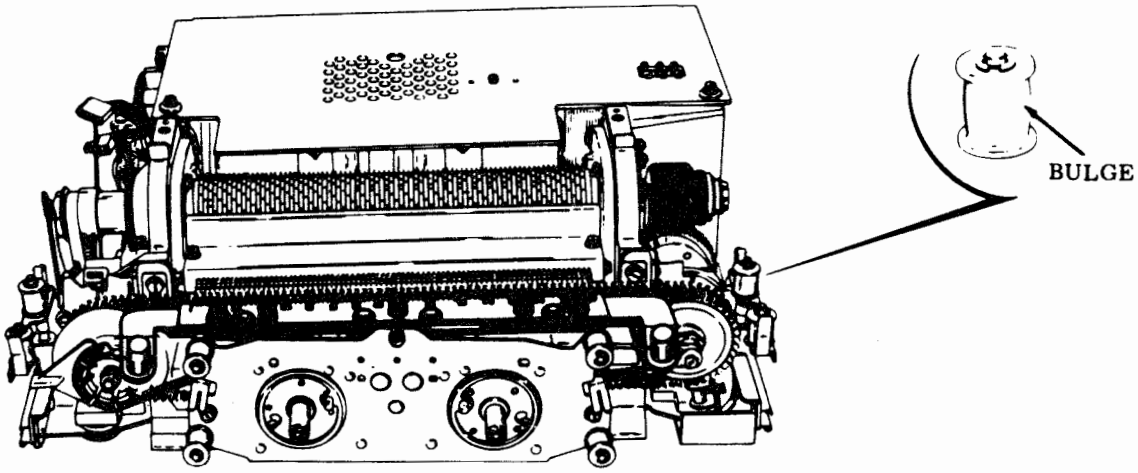

- Check the ribbon for curling. If any curling occurs on the ribbon, perform the RIBBON TRACKING adjustment after the printer is in the cabinet.

Ribbon Feed Drive Belt

- Check the ribbon feed drive belt for missing teeth. Check for damage or worn areas on the ribbon discs. Replace if necessary. If belt is replaced, perform the RIBBON FEED DRIVE BELT adjustment.

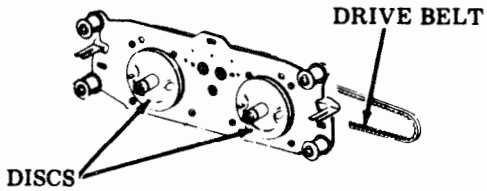

Left Sprocket

- Check for wear, dents, or pitting on the left sprocket flange. Replace if necessary.

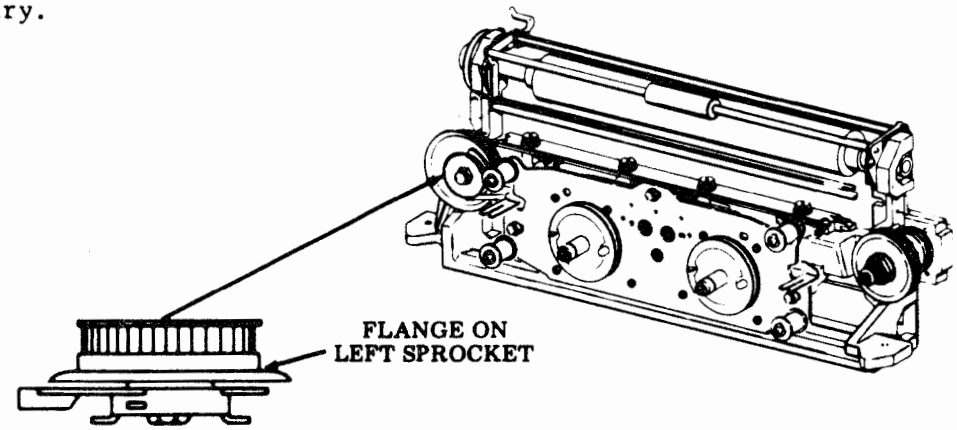

E. PRINTER ROUTINE MAINTENANCE (Contd)

4. CHECKS, Left Sprocket (Contd)

- Check for wear and pitting on the type carrier track. Make sure type carrier lubricating pad is in place and is not damaged. Replace if necessary. If front plate is replaced, perform the BACKUP BAR adjustment.

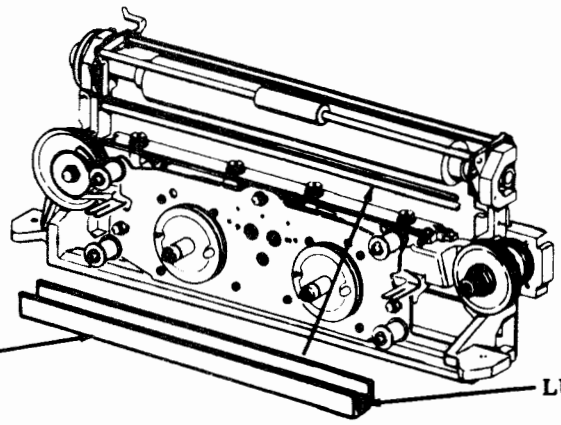

Impeller Shaft Bearing

- Rotate the impeller shaft and check that the shaft rotates freely with no binds in the two supporting bearings. Look at both ends of the shaft for any red oxide deposits near the bearing area. If red oxide is present, replace printer.

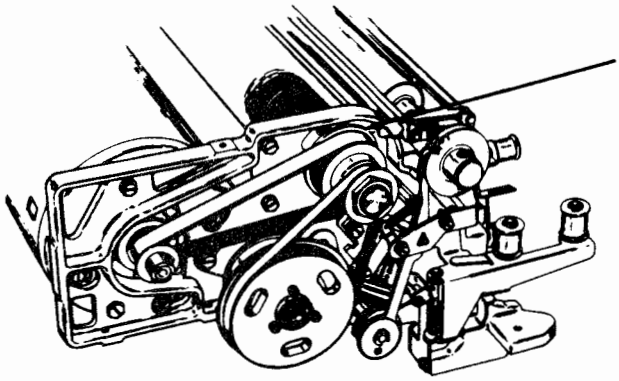

Impeller Shaft Drive Belt

- Check impeller shaft drive belt for missing teeth; replace if necessary. If belt is replaced, perform the IMPELLER SHAFT DRIVE BELT TENSION adjustment.

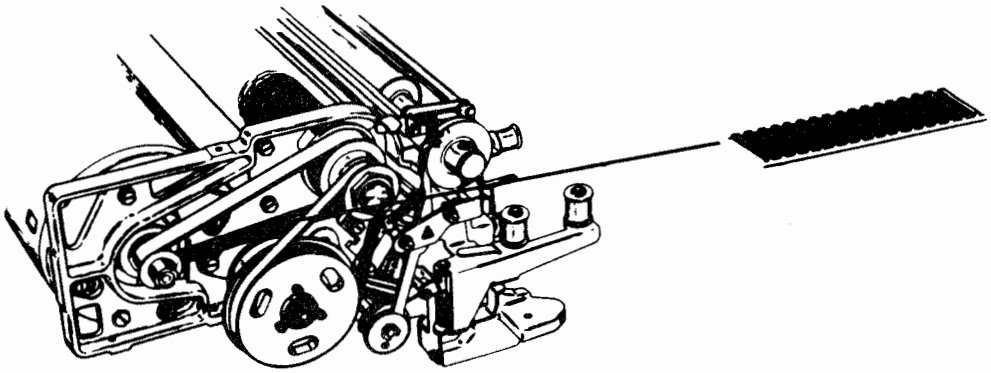

Feed Bar Drive Belt

- Check feed bar drive belt for missing teeth; replace if necessary. If belt is replaced, perform the FEED BAR DRIVE BELT TENSION adjustment.

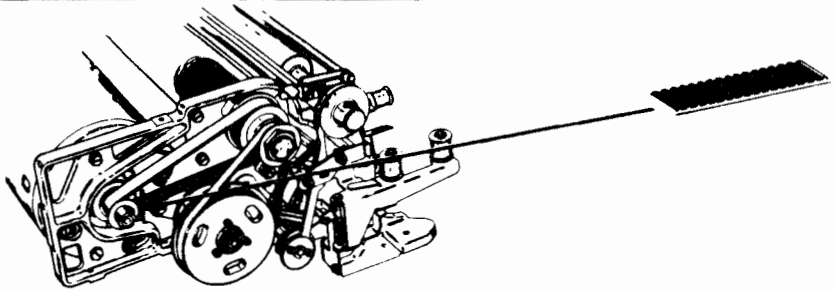

Clutch Drive Belt

- Check clutch drive belt for missing teeth; replace if necessary. If belt is replaced, perform the CLUTCH DRIVE BELT TENSION adjustment.

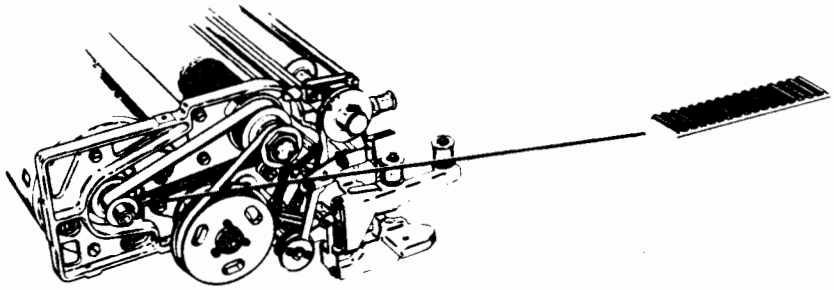

Line Feed Mechanism

- Check for excessive wear on the feed bars, gear, and roller; replace if necessary. If line feed mechanism is replaced, perform the LINE FEED BAR ECCENTRIC adjustment.

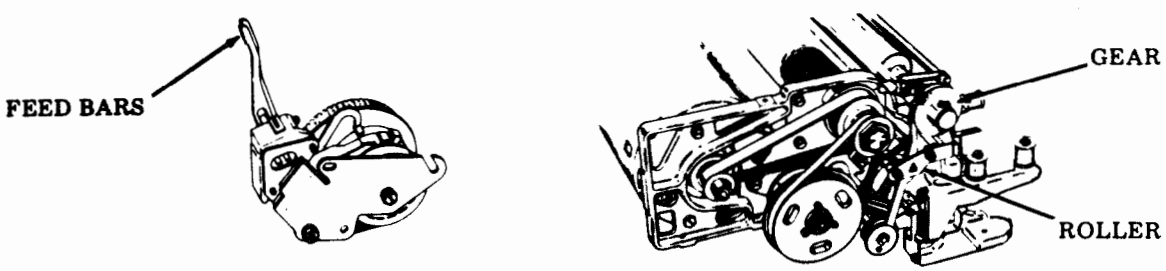

Magnet Coil

- Check that the line feed coil is securely mounted on its core. Check for discoloration due to overheating on the line feed coil casing. If either of these conditions exist, replace the line feed mechanism and perform the FEED BAR DRIVE BELT TENSION adjustment.

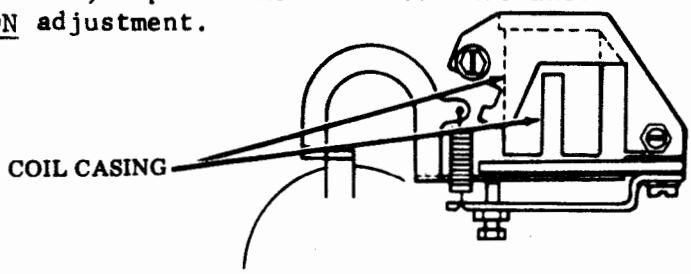

E. PRINTER ROUTINE MAINTENANCE (Contd)

4. CHECKS (Contd)

Motor Shaft

- Check for free rotation of motor shaft. Check for cracks on the motor fan. Replace if necessary. If motor fan is replaced, perform the MOTOR FAN SPACING adjustment.

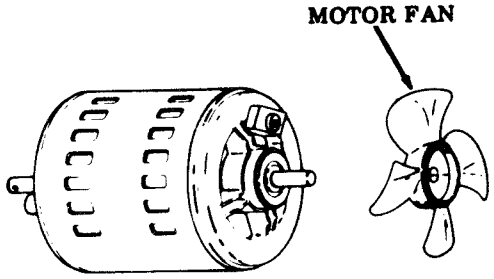

Ribbon Guides

- Check for wear, bending, cracks, or deformities in the left and right ribbon guides. If ribbon guides are replaced, perform the LEFT AND RIGHT RIBBON GUIDES (Final) adjustment.

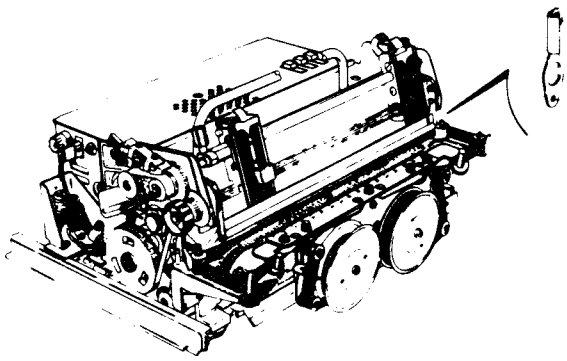

Paper-Out Contact Switch

- Check paper-out contact arm. If it is bent, straighten it and recheck its requirement.

Refer to PART 5 -- ADJUSTMENTS.

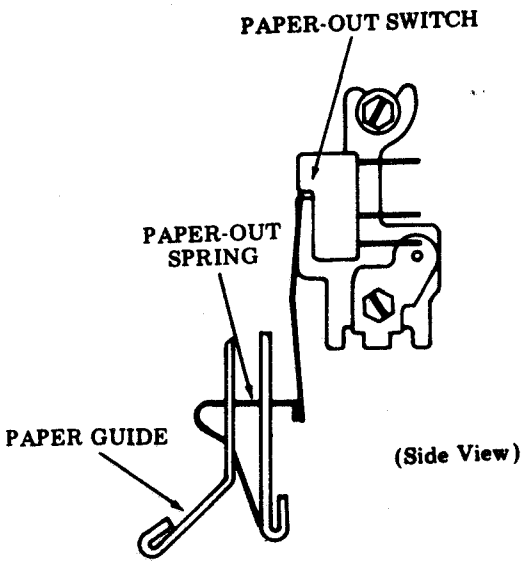

Form-Out Belt

- Check for missing teeth or worn cams on the form-out belt. Replace if necessary. If form-out belt is replaced, perform the FORM-OUT CONTACT TO BELT SPACING adjustment.

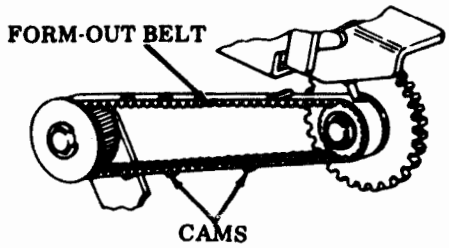

Mylar Strip

- Check for missing, distorted, or torn mylar strip tabs on the front casting assembly. Also replace any mylar strip that has a rough surface.

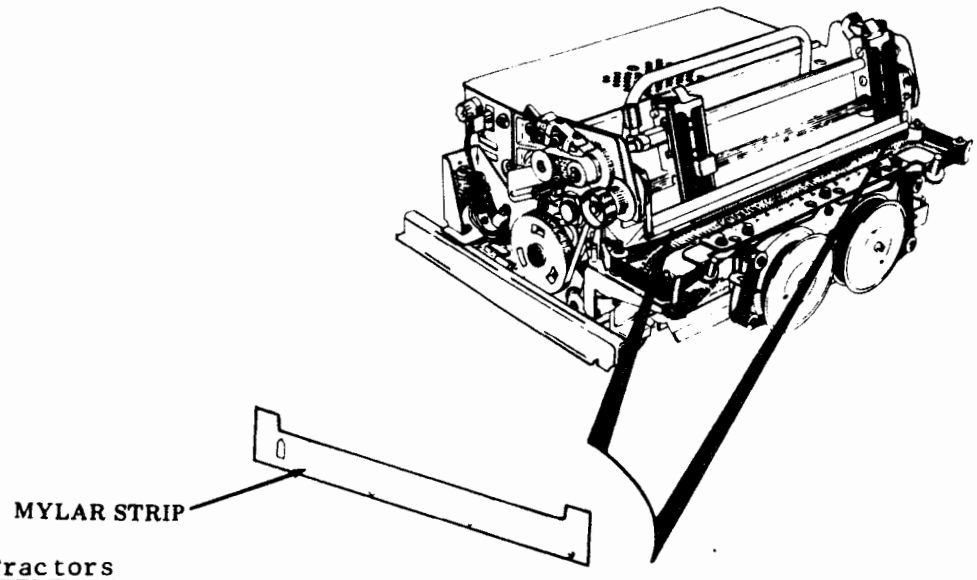

Tractors

- Check for bends, cracks, or deformities in the tractors. Check for free operation of the tractors. Check that no pins are missing on the tractors. Check the amber drive belts for tears, distortion, or mutilation. Replace if necessary. When replacing the tractors make sure that the white dots or raised marks are in line with each other horizontally across the shaft.

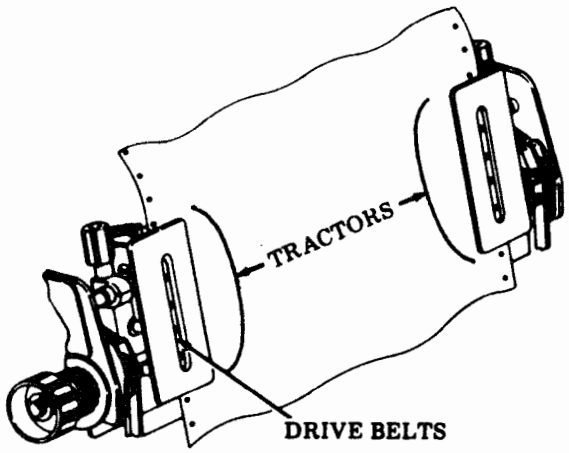

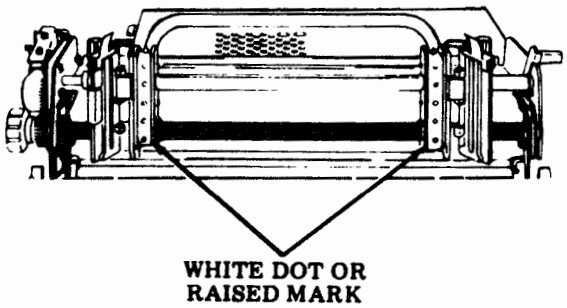

E. PRINTER ROUTINE MAINTENANCE (Contd)

5. PRINTER REASSEMBLY INTO CABINET

Remount the printer in the cabinet; reconnect ac, SSI, and interlock cables.

Replace the type carrier. If lubrication is to be done, saturate the lubricating pad before replacing carrier. Before replacing the type carrier, seat all the pallets using the 402878 gauge. The gauge is marked for 80-column and 132-column. Be sure to use the proper side of the gauge to match the printer being routined. Reinstall the type carrier starting at the left pulley. Once the carrier is in place, rotate the impeller shaft by hand, one complete revolution of the carrier to seat all pallets.

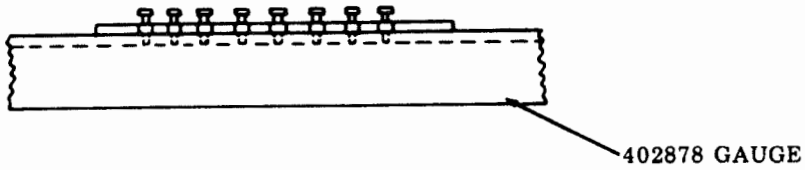

Reinstall the ribbon. See label on printer for correct ribbon routine. Install paper.

6. CABINETS CHECKS

Test operation of interlock switch; pull up on switch plunger and apply power, then lower plunger. Motor should stop.

Check for air circulation in printer cabinet and make sure motor and fan are working properly.

7. PRINTER TESTING

Test the printer for proper operation. The test should include a check on the following:

- Operation of FORMS ADVANCE button (tractor feed)
- Proper printer test message operation with test switch ON
- Simulation form-out (tractor feed)
- Line feed -- single or double.

Refer to PART 3 -- OPERATIONAL CHECKOUT of this manual for detailed checkout procedures. Extensive checkout should not be necessary during routine maintenance. However, the printer must be checked out sufficiently to make sure a working unit is being returned to service. For this purpose a brief off-line checkout should suffice.

During the printer test, the print quality must be examined. Printed copy should have no smudges; characters should not be clipped on either side; no characters should be missing; characters should be clear.

Return the unit to service.

TELETYPE CORPORATION
5555 Touhy Avenue, Skokie, Illinois 60077
Telephone: (312) 982-2000

Manual 561
Issue 1, June 1982
T.O.31W4-4-300-162