TELETYPE T.M.

1979

SHOP MANUAL

Vol. II

MODEL 40

©1973, 1975, 1976, and 1979 by Teletype Corporation
All rights reserved
Printed in U.S.A.

1979

Manual 352

VOL II

model 40

SHOP MANUAL

Note: REFER TO MANUAL 355 FOR MODEL 40 PRINTER

CONTROLLER 2/12/26

CONTROLLER 40DC204/BR

1 - 410770 PRINTER ACCESS
2 - 410679 FULL DUPLEX IA
3 - 410672 OPCON CKT (~~SMT~~)
4 - 410675 MSGCTL
5 - 410674 DATA BUS

40DL291/BR

6 - 410002 DATA CTL (DISPLAY)
7 - 410018 SCROLLING/EDIT
8 - 410003 ADDR CNTL (DISPLAY)
9 - —
10 - 410005 MEM (DISPLAY)
11 - —
12 - —
13 - 410657 CACHE/CHAR GEN (DISPLAY) (ASCII)
14 - 410855 VIDEO GEN (DISPLAY)

TELETYPE™

VOLUME I

INTRODUCTION 1
DISPLAY MONITOR 2
OPCON 3
POWER SUPPLY 4
DISPLAY LOGIC 5
CONTROLLER LOGIC 6

VOLUME II

ROP CONTROLLERS 7
9140 CONTROLLER 8
CABINETS, PAPER WINDER AND FACILITIES 9
SETS AND STATIONS 10
ASSOCIATED EQUIPMENT 11

PART 7 -- ROP CONTROLLERS

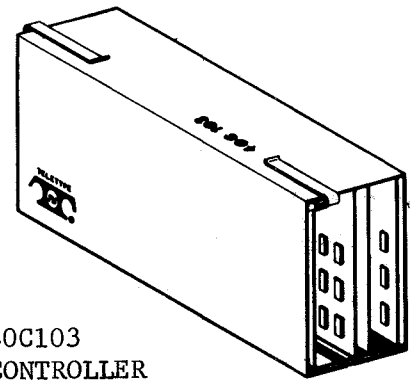

40C103
ROP CONTROLLER

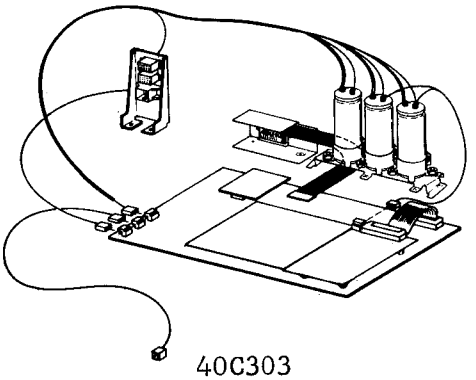

40C303
ROP INTEGRATED CONTROLLER

INDEX

		PAGE
A.	GENERAL	
	1. DESCRIPTION	2
	2. TOOLS	62
B.	SHOP PROCEDURES	
	1. GENERAL	63
	2. CLEANING AND REFINISHING	63
	3. INSPECTION	63
	4. CONVERSIONS AND VARIATIONS	64
	5. PACKING FOR SHIPMENT OR STORAGE -- 40C103 CONTROLLER	71
	6. PACKING FOR SHIPMENT OR STORAGE -- 40C303 CONTROLLER	71
C.	TESTING	
	1. GENERAL	72
	2. TEST SETS	73
	3. OFF-LINE CHECKOUT -- ROP TERMINALS (40C103)	76
	4. OFF-LINE CHECKOUT -- ROP TERMINALS (40C303AA/001 AND 40C303AD)	78
	5. OFF-LINE CHECKOUT -- ROP TERMINALS (40C303AC/003)	84
	6. ON-LINE CHECKOUT -- ROP TERMINALS	88
D.	TROUBLESHOOTING	
	1. GENERAL	88
	2. 40C103 ROP CONTROLLER TROUBLESHOOTING GUIDE	89
	3. 40C303AA/001 CONTROLLER TROUBLESHOOTING GUIDE	91
	4. 40C303AC/003 CONTROLLER TROUBLESHOOTING GUIDE	93
	5. 40C303AD CONTROLLER TROUBLESHOOTING GUIDE	95
E.	ADJUSTMENTS AND LUBRICATION	98
F.	DISASSEMBLY/REASSEMBLY AND PARTS	
	1. GENERAL	98
	2. REMOVAL -- ROP CONTROLLER -- 40C103	99
	3. REMOVAL -- ROP CONTROLLER -- 40C303AA/001	100
	4. REMOVAL -- ROP CONTROLLER -- 40C303AC/003 OR 40C303AD	102
	5. PARTS -- 40C103/-- ROP CONTROLLER	104
	6. PARTS -- 40C303AA/001 ROP CONTROLLER	105
	7. PARTS -- 40C303AC/003 OR 40C303AD/-- ROP CONTROLLER	107
	8. PARTS INDEX -- 40C103 AND 40C303 CONTROLLERS	109

PART 7 -- ROP CONTROLLERS

A. GENERAL

1. DESCRIPTION

This section covers the shop repair actions to be followed for the Model 40 ROP Controllers (40C103 and 40C303), as used in Model 40 Stations. The scope of the repair activity covered in this shop manual is limited to replacement of circuit cards, wired frame, cables and diodes cut for optioning. Circuit card repair other than replacement of straps or diodes used for optioning is not covered. More in depth circuit card analysis can be achieved through use of the wiring diagram packages (WDP) available from Teletype Corporation. The WDP0402 is available for the 40C103 ROP Controller and WDP0463, WDP0539 and WDP0515 are available for the 40C303 Integrated ROP Controller.

NOTE: When ordering replaceable components, unless otherwise specified, prefix each part number with the letters "TP" (ie, TP410055).

ASYNCHRONOUS 40C103 ROP CONTROLLER

The 40C103 Controller for ROP application consists of five circuit cards mounted in a card tray and covered with a shield. The controller acts as a receiving interface for the printer from the data set and the opcon. All power requirements for the controller are the same as for the power supply (+5 V dc, +12 V dc, -12 V dc, and common ground).

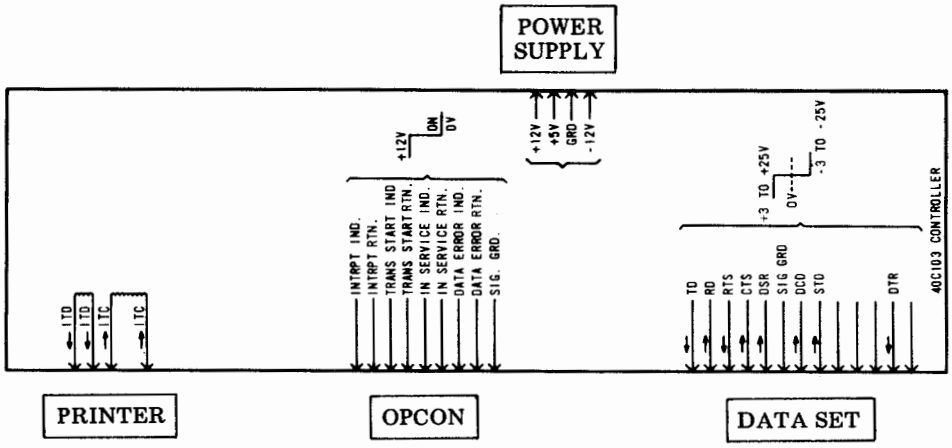

The unit code plate is on the bottom of the unit. The code on the plate identifies the complete assembly (with circuit cards). Only two codes are covered in this part, 40C103/AD (with buffer) and 40C103/AE (without buffer).

The card tray has four occupied card positions (JA, JB, JC, and JD). Position JB will use one of three cards; 410581 (no longer manufactured) and 410585 used in 40C103/AD have buffer storage capability and 410587 used in 40C103/AE has no buffer storage. The four cards are interfaced by the 410584 circuit card (connector).

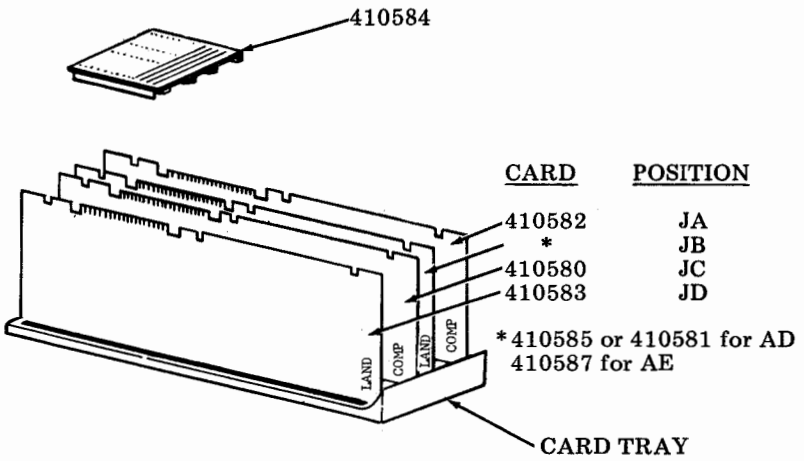

Compatibility Requirements:

410580	Compatible Issue 410584
Issue 1 through 4A	Issue 1
Issue 5A and later	Issue 2A and later

410587	Compatible Issue 410584
Issue 3A and later	Issue 3A and later

Integrated Asynchronous 40C303AA/001 ROP Controller

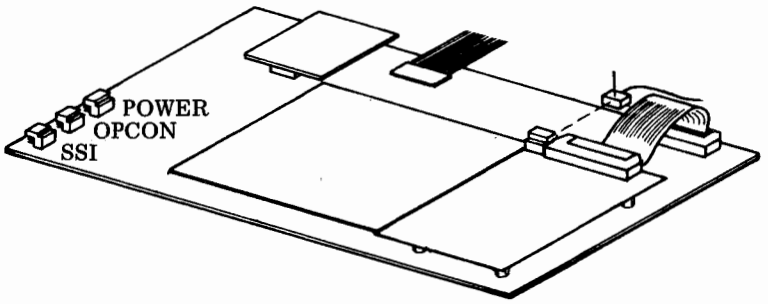

The 40C303AA/001 Controller for ROP application consists of four circuit cards, 410140, 410141, 410142, and 410727. Associated cable assemblies are located inside of the printer cabinet. In addition, the controller draws power from the printer and from capacitors mounted in the rear of the cabinet. Circuit card repair is not covered in this section. More in depth circuit card analysis can be achieved through use of the Wiring Diagram Packages (WDPs) available from Teletype Corporation. WDP0481 is available for friction feed printer cabinet, WDP0436 is available for tractor feed printer cabinet, and WDP0463 is available for the integrated asynchronous controller.

A. GENERAL (Cont)

1. DESCRIPTION (Cont)

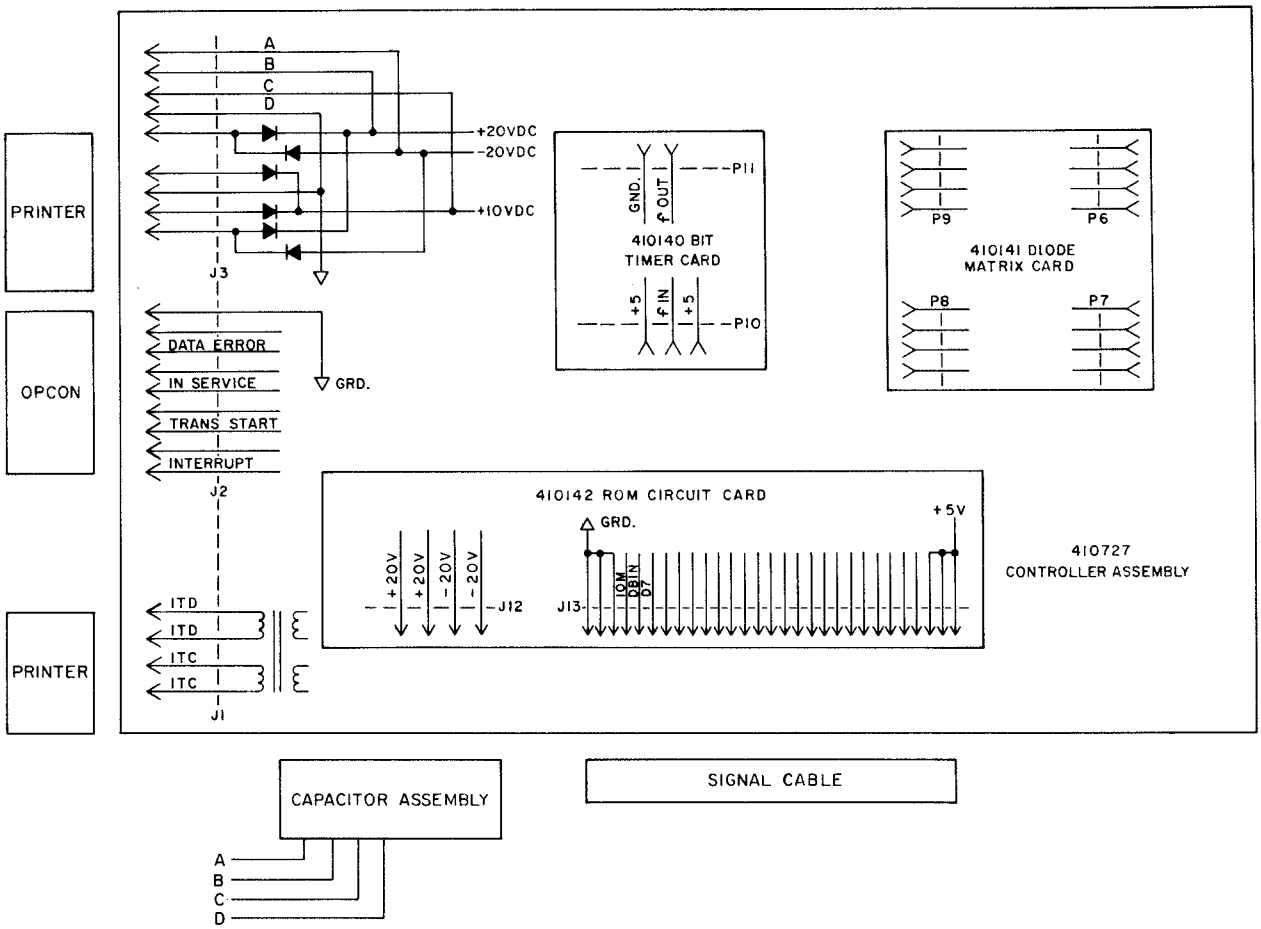

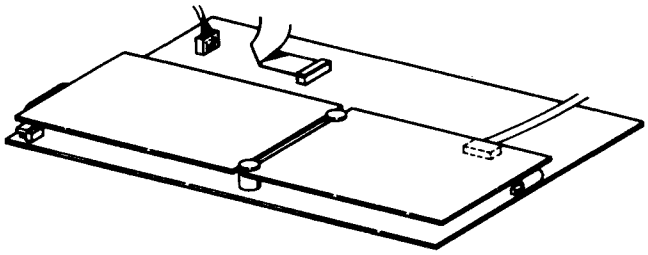

Integrated Synchronous 40C303AC/003 ROP Controller

The 40C303AC/003 Controller for ROP application consists of three circuit cards; 410733, 410734, and 410735. Associated cable assemblies are located inside of the printer cabinet. The cabinets used to house the printers and the integrated synchronous controller are the same as those used for the asynchronous tractor feed controller arrangements except that in late vintage printer cabinets for asynchronous controllers, the connector opening at the rear is larger. In addition, the controller draws power from the printer and from capacitors mounted in the rear of the cabinet. Circuit card repair is not covered. More in depth circuit card analysis can be achieved through use of the Wiring Diagram Packages (WDPs) available from Teletype Corporation. WDP0435 is available for 80-column printer, WDP0462 is available for 132-column tractor feed printer, and WDP0515 is available for integrated synchronous controller.

Integrated Synchronous 40C303AC/003 ROP Controller

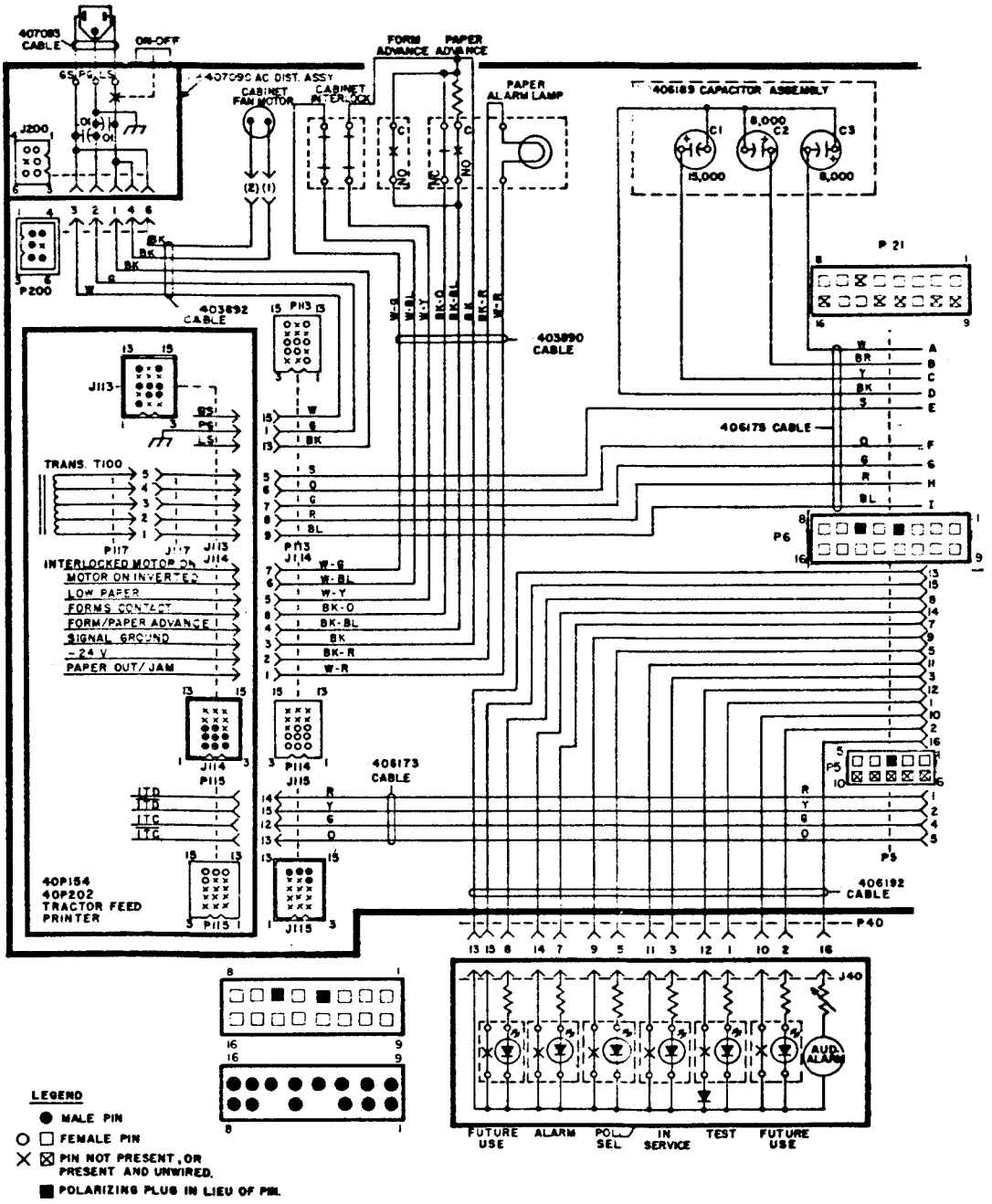

A. GENERAL (Cont)

1. DESCRIPTION (Cont)

Integrated Synchronous 40C303AC/003 ROP Controller (Cont)

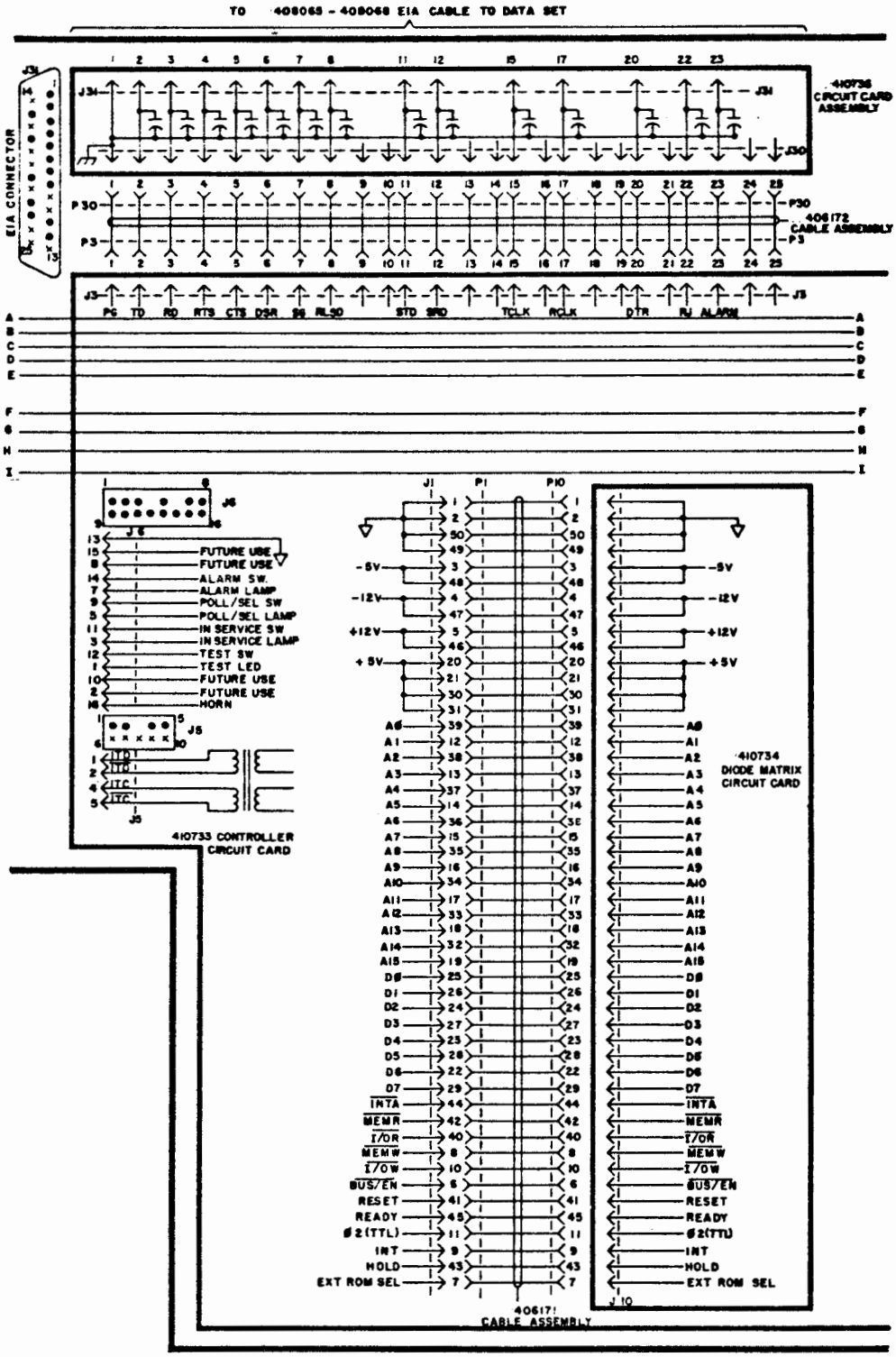

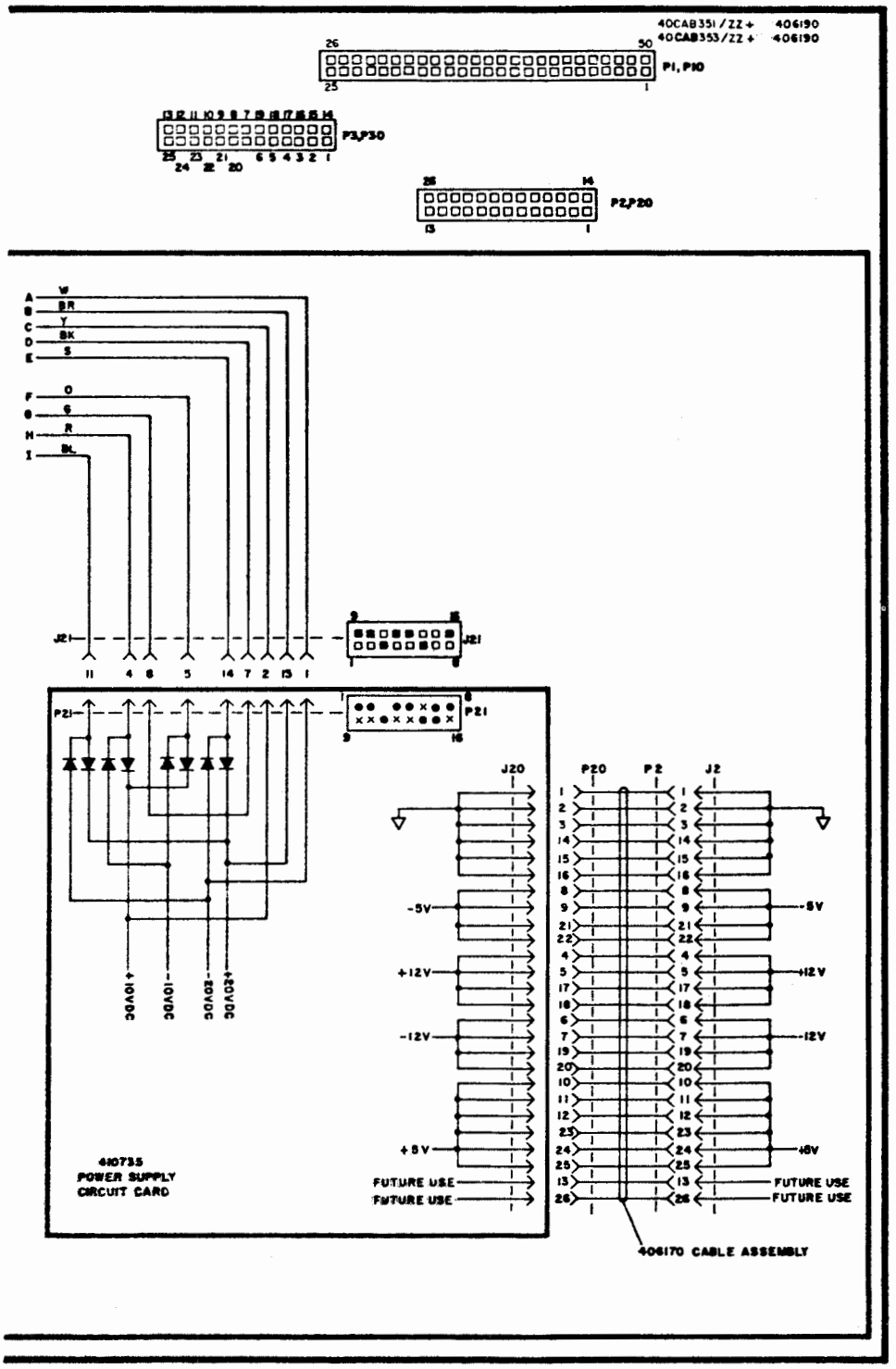
40CAB351/ZZ+ 406190
40CAB353/ZZ+ 406190
P1, P10
P3,P30
P2,P20
J21
P21
+10VDC
-10VDC
-20VDC
+20VDC
J20
P20
P2
J2
-5V
+12V
-12V
+5V
FUTURE USE
FUTURE USE
410735
POWER SUPPLY
CIRCUIT CARD
406170 CABLE ASSEMBLY

A. GENERAL (Cont)

1. DESCRIPTION (Cont)

Integrated Asynchronous 40C303AD ROP Controller

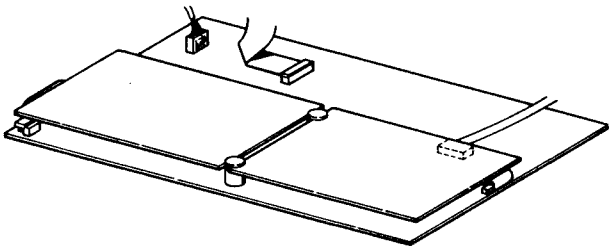

The 40C303AD/ Controller for ROP application consists of three circuit cards: 410734, 410735, and 410737. Associated cable assemblies are located inside of the printer cabinet. In addition, the controller draws power from the printer and from capacitors mounted in the rear of the cabinet. Circuit card repair is not covered in this section. More in depth circuit card analysis can be achieved through use of the Wiring Diagram Packages (WDPs) available from Teletype Corporation. The WDP0539 is available for tractor feed forms access printer cabinet and WDP0515 is available for integrated asynchronous controller. The 40C303AD/ Controller is identical to the 40C303AC/003 Integrated Synchronous Controller (except for preprogrammed data handling procedure), thereby allowing the use of common components.

Asynchronous 40C103/-- ROP Controller Options

The 40C103 ROP Controller provides various options which are selected to determine operating characteristics. None of the options affect the unit code, but any change in optioning should be noted in the station features and option record. Identifying the option before servicing or testing is required to properly analyze the terminal responses.

The following is a description of the options provided. Asterisk (*) indicates the factory optioning. For activating procedures, see Section B.

410580 in 40C103/-- ROP Controller

3.	EIA/Send/Receive Data Baud Rate	Insulator D Position	Insulator E Position	
a.	1050	1	2	
b.	1200	1	1	*
c.	2400	2	1	

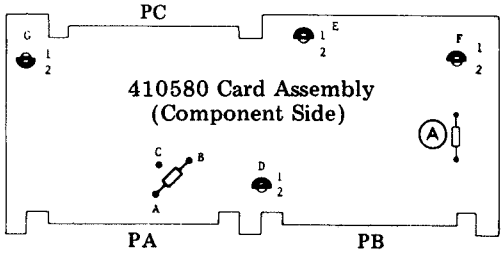

Early Issue 7A

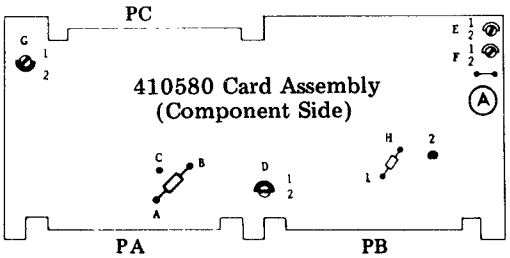

Late Issue 7B

24.	Odd/Even Character Parity Check	Strap Condition	
a.	Even Vertical Parity (Response for odd parity)	Strap A to B	*
b.	Odd Vertical Parity (Response for even parity)	Strap A to C	

25.	Response to Receiving Parity Error	Insulator F Position	Strap Ⓐ Condition	
a.	Printer receives spacing character with eighth bit mark.	2	-	
b.	Printer receives character even though it has parity error.	1	-	*
c.	DATA ERROR key lights.	-	Removed	
d.	DATA ERROR key does not light	-	Installed	*

35.	Printer Motor Control (See Note 1.)	Strap Condition	
a.	"Data Set Ready" controls printer motor.	Strap H to 1	*
b.	"Carrier Detect" controls printer motor.	Strap H to 2	

NOTE 1: H strap location is on component side at coordinates D11. Strap H position present only on Issue 7B (and higher) 410580 circuit card.

NOTE 2: On-line testing requires Option 35.a. to be selected. After initial testing, Option 35.b. may be installed (only if specified on order). If 35.b. is installed during testing, the printer motor will stop when the test set drops carrier after sending the station CDC.

36.	Printer Paper Alarm	Insulator G Position	
a.	Paper Alarm affects "Data Terminal Ready" at end of call. DTR held off until paper is restored.	2	*
b.	Paper Alarm affects "Data Terminal Ready" immediately. DTR held off until paper is restored.	1	

410583 in 40C103/-- ROP Controller

26.	Trans Start -- Is not to be enabled.

NOTE: Trans Start is always operable off-line (ROP) to generate local test message.

410582 in ROP Controller

NOTE: Option 38.b. is shown enabled.

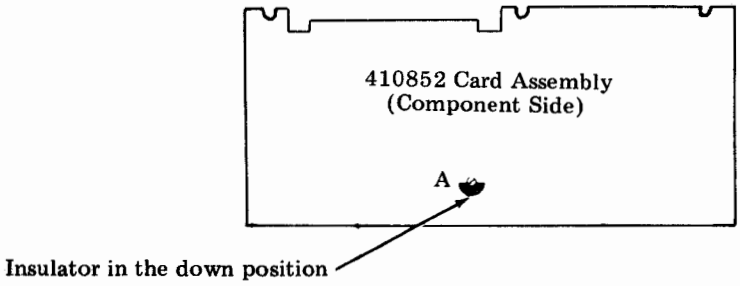

A. GENERAL (Cont)

1. DESCRIPTION (Cont)

410583 in 40C103/-- ROP Controller (Cont)

38.	Data Stacking	Insulator Position
a.	Enable Data Stacking	Insulator Up
b.	Disable Data Stacking	Insulator Down *

NOTE: The following strapping is required on Issue 1 of the 410587 circuit card when using a 40C103/AE ROP Controller (without buffer) and Option 38.a. is to be enabled. Select Option 38.b. when using 40C103/AD (with buffer).

PC -- PIN 20 to MLB1 PIN 1
MLB1 PIN 2 to MLB1 PIN 3
MLB1 PIN 4 to MLA1 PIN 2
(Connector PC-22)

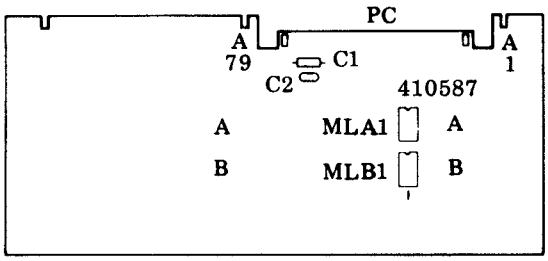

410587 Circuit Card

Issue 2.a. of the 410587 circuit card has these straps incorporated in the board layout.

Integrated Asynchronous 40C303AA/001 ROP Controller Options

Options in the integrated controller are selected by setting miniature slide, toggle, or rocker switches on the 410140 and 410727 circuit cards or by cutting diodes on the 410141 diode matrix circuit card.

The ROP controller options are listed on the following pages and are numbered 101. through 158. Option 191. is present only when EPROMs 404602, 404603, 404604, and 404605 are issue 3 or higher. A brief description is given for each option. Options marked with an asterisk (*) are installed at the factory.

ACTIVATING CONTROLLER OPTIONS

410140 Variable Bit Timer Card

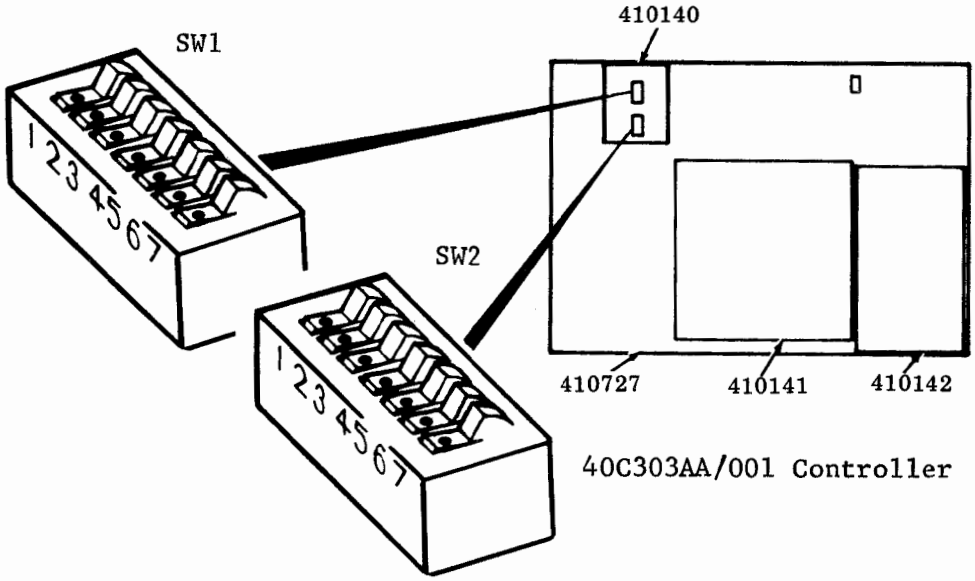

101. Operating Speed		SW1							SW2							
		1	2	3	4	5	6	7	1	2	3	4	5	6	7	
a.	110 Baud	●	●	○	●	●	○	●	●	○	●	●	●	●	○	
b.	150 Baud	○	○	○	●	●	●	○	●	●	●	●	●	●	○	
c.	300 Baud	○	○	●	○	○	●	●	○	●	●	●	●	●	○	
d.	600 Baud	●	○	○	○	●	○	○	○	●	●	●	●	●	○	
e.	1050 Baud	○	●	○	○	●	●	○	○	●	●	●	●	●	○	
f.	1200 Baud	○	●	○	○	○	●	○	○	●	●	●	○	●	○	*
g.	1800 Baud	○	○	○	○	●	●	○	●	●	○	○	●	●	○	
h.	2100 Baud	○	○	○	○	○	●	○	●	●	●	●	●	●	○	
i.	2400 Baud	○	○	○	○	○	○	○	●	●	●	○	●	●	○	
j.	3000 Baud	○	○	○	○	●	○	●	○	●	●	●	●	●	○	
k.	3600 Baud	○	○	○	○	○	●	●	○	○	●	●	●	●	○	
l.	4800 Baud	○	○	○	○	○	○	●	○	○	●	●	○	●	○	

●Indicates dot end of rocker switch depressed, toggle or slide positioned to ON.
○Indicates blank end of rocker switch depressed, toggle or slide positioned to OFF.
*Factory installed.

A. GENERAL (Cont)

1. DESCRIPTION (Cont)

Integrated Asynchronous 40C303AA/001 ROP Controller Options (Cont)

TABLE A
ASCII CODE

BITS b6 b5 b4	0 0 0	0 0 1	0 1 0	0 1 1	1 0 0	1 0 1	1 1 0	1 1 1
bbbb 3210								
0000	NUL	DLE	SP	0	@	P	`	p
0001	SOH	DC1	!	1	A	Q	a	q
0010	STX	DC2	"	2	B	R	b	r
0011	ETX	DC3	#	3	C	S	c	s
0100	EOT	DC4	$	4	D	T	d	t
0101	ENQ	NAK	%	5	E	U	e	u
0110	ACK	SYN	&	6	F	V	f	v
0111	BEL	ETB	'	7	G	W	g	w
1000	BS	CAN	(	8	H	X	h	x
1001	HT	EM	)	9	I	Y	i	y
1010	NL	SUB	*	:	J	Z	j	z
1011	VT	ESC	+	;	K	[	k	{
1100	FF	FS	,	<	L	\	l	|
1101	CR	GS	-	=	M	]	m	}
1110	SO	RS	.	>	N	^	n	~
1111	SI	US	/	?	O	_	o	DEL

1= Mark Ø = Space

Example: Bits 0 through 6 of the bit permutation for the character M are 1011001, respectively.

NUL -- Null
SOH -- Start of Heading
STX -- Start of Text
ETX -- End of Text
EOT -- End of Transmission
ENQ -- Enquiry
ACK -- Acknowledge
BEL -- Bell
BS -- Back Space
HT -- Horizontal Tab
NL -- New Line
VT -- Vertical Tab
FF -- Form Feed
CR -- Carriage Return
SO -- Shift-Out
SI -- Shift-In
DLE -- Data Link Escape
DC1 -- Device Control 1
DC2 -- Device Control 2
DC3 -- Device Control 3
DC4 -- Device Control 4
NAK -- Negative Acknowledge
SYN -- Synchronous
ETB -- End of Transmission Block
CAN -- Cancel
EM -- End of Media
SUB -- Substitute
ESC -- Escape
FS -- Field Separator
GS -- Group Separator
RS -- Record Separator
US -- Unit Separator
SP -- Space
DEL -- Delete

410141 Diode Matrix Circuit Card

NOTE: Options 102. through 118. apply to multipoint private line operation only (Option 141.b. must be selected); for switched network operation, skip to Option 119. (Option 141.a. must be selected).

102. Variable Characters for Multipoint Private Line Operation				Diode Assignment	
				Row	Column
a.	CDC No. 1, Character 1			R1	b0-b6
b.	CDC No. 1, Character 2			R2	b0-b6
c.	CDC No. 2, Character 1	Note 2		R3	b0-b6
d.	CDC No. 2, Character 2			R4	b0-b6
e.	CDC No. 3, Character 1	Note 3		R5	b0-b6
f.	CDC No. 3, Character 2			R6	b0-b6
g.	Answer-Back 1, Character 1 (R1)		1 or 2 Characters — Check Option 117.a. or b.	R7	b0-b6
h.	Answer-Back 1, Character 2 (R2)			R8	b0-b6
i.	Answer-Back 2 (R3)			R9	b0-b6
j.	Answer-Back 3 (R4)			R10	b0-b6
k.	Interrupt			R11	b0-b6
l.	Start of Heading/Start of Text 1			R12	b0-b6
m.	Start of Heading/Start of Text 2			R13	b0-b6
n.	End of Transmission (in addition to EOT or DLE EOT)			R14	b0-b6

Reminder: Leave diodes in place (▭) for spacing or 0 bits. Cut and remove (⊠) diodes for marking or 1 bits.

NOTE 1: A character must be chosen for each position. Code only the first seven levels of ASCII (no parity bit). If Option 124.b. is chosen, remove R14 b7 diodes. This allows a diagnostic readout of the variable characters programmed for Option 102. By sending an ENQ to a selected station, the terminal will generate a reply of the characters programmed for Options 102.a. through 120.n.

NOTE 2: If CDC No. 2 not used, code same as CDC No. 1.

NOTE 3: If CDC No. 3 not used, code same as CDC No. 2.

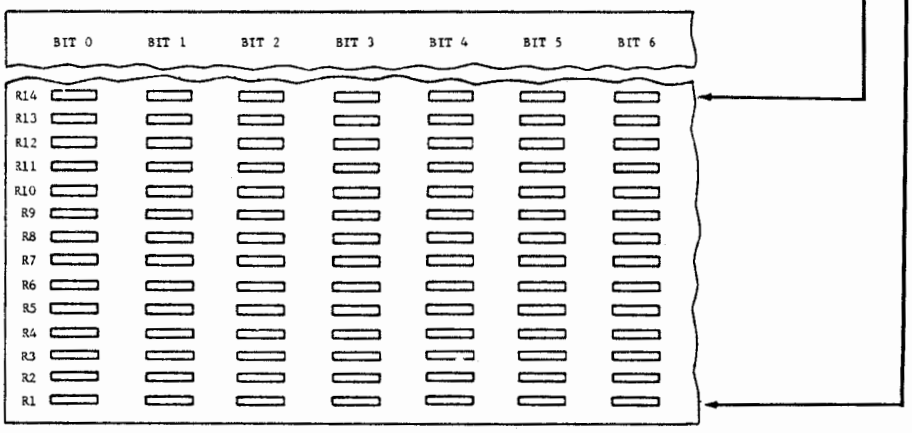

Select rows R1 through R14 to match the options specified on the service order. Program rows R1 through R14 in accordance with the ASCII code chart (Table A).

Example: Option 102.a., CDC No. 1, Character 1, R1 shown coded per ASCII for character A.

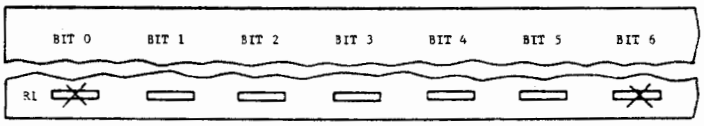

▭ Diode left in.
⊠ Diode cut and removed.

A. GENERAL (Cont)

1. DESCRIPTION (Cont)

410141 Diode Matrix Circuit Card (Cont)

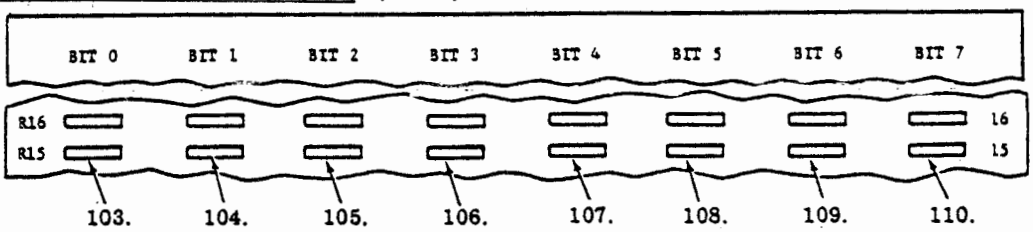

OPTIONS

103.	Number of Characters in CDC No. 1	R15, b0	
a.	One Character CDC	▭	*
b.	Two Character CDC	⊠	

NOTE 1: A one character CDC No.1 should have Options 102.a. and b. coded the same.

NOTE 2: If DELETE is used after a CDC, it is not counted in the number of characters selected in this and the following two options (103. through 105.); instead, DELETE is enabled by Options 106. through 108.

104.	Number of Characters in CDC No.2	R15, b1	
a.	One Character CDC	▭	*
b.	Two Character CDC	⊠	

NOTE: A one character CDC No.2 should have Options 102.c. and 102.d. coded the same.

105.	Number of Characters in CDC No.3	R15, b2	
a.	One Character CDC	▭	*
b.	Two Character CDC	⊠	

NOTE: A one character CDC No.3 should have Options 102.c. and 102.f. coded the same.

106.	DELETE Must Follow CDC No.1	R15, b3	
a.	No	▭	*
b.	Yes	⊠	

107.	DELETE Must Follow CDC No.2	R15, b4	
a.	No	▭	*
b.	Yes	⊠	

108.	DELETE Must Follow CDC No.3	R15, b5	
a.	No	▭	*
b.	Yes	⊠	

109.	Answer-Back Generated for CDC No.2	R15, b6	
a.	Answer-Back to CDC No.2	▭	*
b.	No Answer-Back to CDC No.2	⊠	

▭ Diode left in.
⊠ Diode cut and removed.
*Factory installed.

110.	Answer-Back Generated for No.3	R15, b7	
a.	Answer-Back to CDC No.3	▭	*
b.	No Answer-Back to CDC No.3	▭✕	

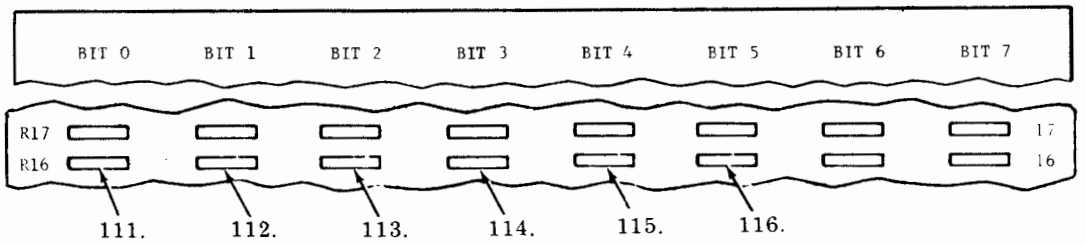

OPTIONS

111.	Printer-Controlled Answer-Back	R16, b0	
a.	All Answer-Backs Delayed by Time of Option 118. (118.a. -- No Delay, 118.b. -- Approximately 180 Milliseconds)	▭	*
b.	Answer-Back 1 Delayed Until Printer Ready to Accept a Character or by Time of Option 118. (Whichever is Longer), Answer-Backs 2 and 3 Delayed by Time of Option 118. (If Printer is Not Ready to Accept a Character After 2 Seconds, Answer-Back 2 is Sent.)	▭✕	

NOTE: Option 111.b. requires that Option 140.a. be selected.

112.	Form Feed On Deselect	R16, b1	
a.	No Form Feed on Deselect	▭	*
b.	FF Character Sent to Printer on Deselect	▭✕	

113.	Loss of Ability to Receive Causes Deselect	R16, b2	
a.	Loss of Ability to Receive Does Not Cause Deselect	▭	*
b.	Loss of Ability to Receive Causes Deselect	▭✕	

NOTE: Option 113.b. requires that Option 146.b. be selected.

114.	Line Break on Loss of DTR	R16, b3	
a.	Loss of DTR Does Not Cause Line Break	▭	*
b.	Loss of DTR Does Cause Line Break	▭✕	

115.	Line Break on Vertical Parity Error	R16, b4	
a.	Vertical Parity Error Does Not Cause Line Break	▭	*
b.	Vertical Parity Error Does Cause Line Break	▭✕	

116.	Copy Before STX (As Selected by Options 102.1. and m.)	R16, b5	
a.	Copy After STX	▭	*
b.	Copy After Receiving Valid CDC If Ready to Receive (Before STX)	▭✕	

NOTE: Option 109.b. and/or 110.b. disables Option 116.b.

▭ Diode left in.
▭✕ Diode cut and removed.
*Factory installed.

A. GENERAL (Cont)

1. DESCRIPTION (Cont)

410141 Diode Matrix Circuit Card (Cont)

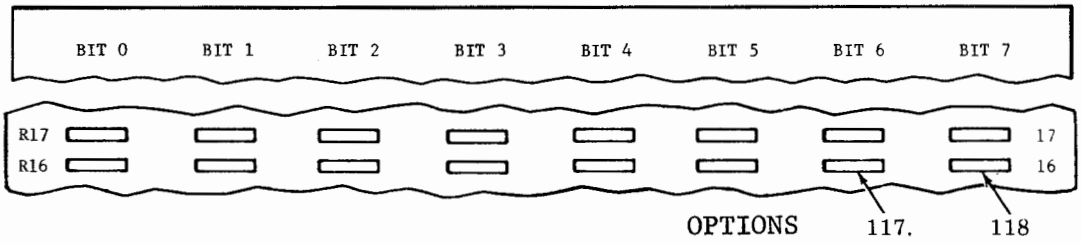

117.	Number of Characters in Answer-Backs	R16, b6	
a.	Answer-Backs Consist of 1 Character	▭	*
b.	Answer-Backs Consist of 2 Characters	⊠	

NOTE: Option 117. related to answer-back characters for multipoint private line operation. See Option 102.g., h., i., or j.

118.	Answer-Back Response Delay	R16, b7	
a.	No Delay After Clear to Send (CB) ON From Data Set	▭	*
b.	Fixed Delay of Approximately 180 Milliseconds	⊠	

▭ Diode left in.
⊠ Diode cut and removed.
*Factory installed.

TABLE B

TELETYPESETTER CODE

CHARACTERS		CODE ELEMENTS BIT DESIGNATION						CHARACTERS		CODE ELEMENTS BIT DESIGNATION					
UNSHIFT	SHIFT	b0	b1	b2	b3	b4	b5	UNSHIFT	SHIFT	b0	b1	b2	b3	b4	b5
a	A		■	■				7	7/8	■	■	■	■		
b	B		■			■	■	8	—	■		■	■		
c	C			■	■	■		9	&	■				■	■
d	D		■			■		0	?	■		■	■		■
e	E		■					$	!	■	■	■			
f	F		■		■	■		V̇	V̇	■				■	
g	G			■		■	■	,	,	■			■	■	
h	H				■		■	.	.	■			■	■	■
i	I			■	■			)	(	■	■				■
j	J		■	■		■		;	:	■		■		■	■
k	K		■	■	■	■		-	@	■	■			■	
l	L			■			■	SHIFT			■	■		■	■
m	M				■	■	■	UNSHIFT			■	■	■	■	■
n	N				■	■		BLANK							
o	O					■	■	CARRIAGE RETURN						■	
p	P			■	■		■	ELEVATE (LF)				■			
q	Q		■	■	■		■	SPACE					■		
r	R			■		■		EM SPACE		■	■		■		
s	S		■		■			V. RULE	EM SP	■		■			■
t	T						■	EM LEADER		■			■		■
u	U		■	■	■			EN SPACE		■		■	■	■	
v	V			■	■	■	■	EN LEADER		■	■	■	■		■
w	W		■	■			■	THIN SPACE		■					
x	X		■		■	■	■	ADD-THIN SPACE		■			■		
y	Y		■		■		■	PAPER FEED		■		■			
z	Z		■				■	BELL		■	■	■		■	
1	1/8	■	■		■	■	■	QUAD LEFT		■	■		■	■	
2	1/4	■	■	■			■	QUAD RIGHT		■	■	■	■	■	
3	3/8	■	■					QUAD CENTER		■		■	■	■	■
4	1/2	■		■		■		UPPER RAIL		■	■			■	■
5	5/8	■					■	LOWER RAIL		■	■	■		■	■
6	3/4	■	■		■		■	RUBOUT		■	■	■	■	■	■

■ Marking Element = 1 □ Spacing Element = 0

Example: Bits 0 through 5 of the bit permutation for the character F are 010110, respectively.

NOTE: Variations of the Teletypesetter code in current use may have different characters substituted for the fraction and/or punctuation symbols shown.

A. GENERAL (Cont)

1. DESCRIPTION (Cont)

TABLE C
BAUDOT CODE

CHARACTERS		CODE ELEMENTS BIT DESIGNATION				
LETTERS CASE	FIGURES CASE	b0	b1	b2	b3	b4
A	—	■	■			
B	?	■			■	■
C	:		■	■	■	
D	$	■			■	
E	3	■				
F	!	■		■	■	
G	&		■		■	■
H	#			■		■
I	8		■	■		
J	'	■	■		■	
K	(	■	■	■	■	
L	)		■			■
M	.			■	■	■
N	,			■	■	
O	9				■	■
P	0		■	■		■
Q	1	■	■	■		■
R	4		■		■	
S	BELL	■		■		
T	5					■
U	7	■	■	■		
V	;		■	■	■	■
W	2	■	■			■
X	/	■		■	■	■
Y	6	■		■		■
Z	"	■				■
BLANK						
SPACE				■		
CAR. RET.					■	
LINE FEED			■			
FIGURES		■	■		■	■
LETTERS		■	■	■	■	■

■ Marking Element = 1 □ Spacing Element = 0

Example: Bits 0 through 4 of the bit permutation for the character F are 10110, respectively.

NOTES:

A. GENERAL (Cont)

I. DESCRIPTION (Cont)

410141 Diode Matrix Circuit Card (Cont)

119.	Variable Characters for Switched Network Answer-Back	Diode Assignment		
		Row	Column ASCII	Column Baudot
a.	Answer-Back Character 1	R1	b0-b6	b0-b4
b.	Answer-Back Character 2	R2	b0-b6	b0-b4
c.	Answer-Back Character 3	R3	b0-b6	b0-b4
d.	Answer-Back Character 4	R4	b0-b6	b0-b4
e.	Answer-Back Character 5	R5	b0-b6	b0-b4
f.	Answer-Back Character 6	R6	b0-b6	b0-b4
g.	Answer-Back Character 7	R7	b0-b6	b0-b4
h.	Answer-Back Character 8	R8	b0-b6	b0-b4
i.	Answer-Back Character 9	R9	b0-b6	b0-b4
j.	Answer-Back Character 10	R10	b0-b6	b0-b4
k.	Answer-Back Character 11	R11	b0-b6	b0-b4
l.	Answer-Back Character 12	R12	b0-b6	b0-b4
m.	Answer-Back Character 13	R13	b0-b6	b0-b4
n.	Answer-Back Character 14	R14	b0-b6	b0-b4
o.	Answer-Back Character 15	R15	b0-b6	b0-b4
p.	Answer-Back Character 16	R16	b0-b6	b0-b4

REMINDER: Leave diodes in place (▭) for spacing or 0 bits. Cut and remove (⊠) diodes for marking or 1 bits.

NOTE 1: Option 119.(a. through p., as desired) requires that Options 120. (a. through p., corresponding) and 141.a. be selected.

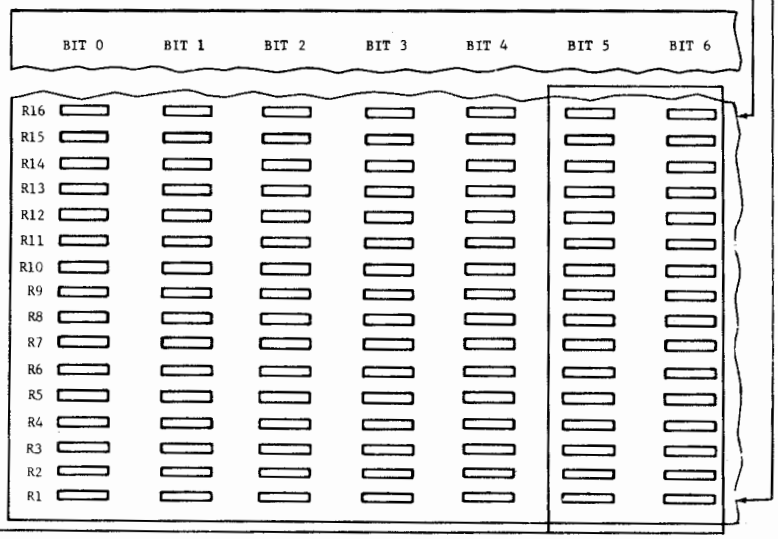

Leave b5 and b6 diodes intact when optioning for Baudot (5-level) codes. (See Table C.)

NOTE 2: Option 119. is coded for ASCII characters (code only the first seven levels -- no parity bit) except when Option 127.b. is activated for Baudot applications.

Select rows R1 through R16 to match the options specified on the service order. Program rows R1 through R16 in accordance with the ASCII or Baudot code charts (Tables A and C respectively).

Example: Option 119.a. Answer-Back Character 1, R1 shown coded per ASCII code chart for character D.

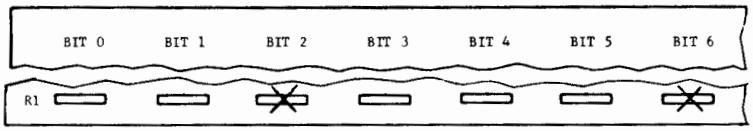

▭ Diode left in
⊠ Diode cut and removed.

120.	Number of Characters in Switched Network Answer-Back	Cut and Remove Diode
a.	1	R1, b7
b.	2	R2, b7
c.	3	R3, b7
d.	4	R4, b7
e.	5	R5, b7
f.	6	R6, b7
g.	7	R7, b7
h.	8	R8, b7
i.	9	R9, b7
j.	10	R10, b7
k.	11	R11, b7
l.	12	R12, b7
m.	13	R13, b7
n.	14	R14, b7
o.	15	R15, b7
p.	16	R16, b7

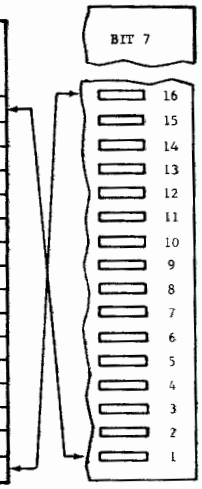

121.	Left Margin Setting	R17, b1 to R18, b7
a.	Left Margin at Column 1 (See Note)	▭ *
b.	Left Margin at Column 2 or Beyond	⊠ Table D

NOTE: Diode R17, b0 is NOT cut for Option 121.a. or b.

NOTE 1: Cut and remove only the b7 diode in the row corresponding to the LAST answer-back character selected in Option 119.
For example, if Option 119.a. through h. has been selected, select only Option 120.h.

NOTE 2: Option 120. is applicable to both ASCII and Baudot optioning of Option 119.

TABLE D

LEFT MARGIN DIODE LOCATION

COLUMN	DIODE	COLUMN	DIODE
		9	R18, b0
2	R17, b1	10	R18, b1
3	R17, b2	11	R18, b2
4	R17, b3	12	R18, b3
5	R17, b4	13	R18, b4
6	R17, b5	14	R18, b5
7	R17, b6	15	R18, b6
8	R17, b7	16	R18, b7

Cut and remove(⊠)only the diode corresponding to the desired left margin position (printer column) as listed in Table D. If the printer left margin is required to be at column 17 or beyond, refer to the table for Option 122. for the diode location. See Note, above, for exception.

Option 121.b. requires selection of Option 131.b.
Example: Option 121.b. shown selected for printer left margin at printer column 4.

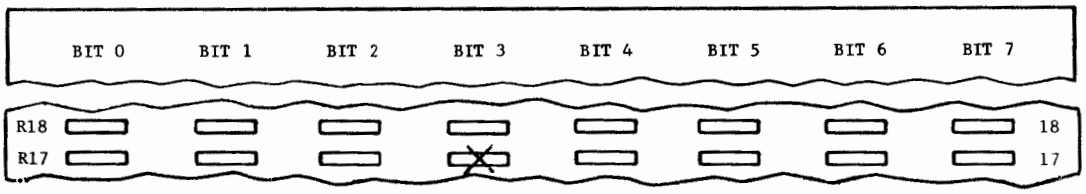

▭ Diode left in.
⊠ Diode cut and removed.
*Factory installed.

A. GENERAL (Cont)

1. DESCRIPTION (Cont)

410141 Diode Matrix Circuit Card (Cont)

122.	Horizontal Tabulation Settings	R17, b1 to R33, b3
a.	No Horizontal Tab Settings (See Note)	▭ (ALL) *
b.	Preselected Horizontal Tab Settings in Any Column 2 Through 80 (80-Column Printer) or 2 Through 132 (132-Column Printer) (See Note)	⊠ Table E

NOTE: Diode R17, b0 is NOT cut for Option 122.a. or b.

When selecting horizontal tab settings for a particular customer application, remember that the printer spaces, prints, and tabs at 10 character/columns per inch.

Horizontal tab settings to the left of, or the same as the left margin setting of Option 121.b. should, obviously, be avoided. Cutting and removing a lower numbered diode than chosen for the left margin setting will result in a new left margin at a lower numbered column and the left margin established by Option 121.b. will become a horizontal tab stop. Similarly, horizontal tab selecting beyond 80 columns must be avoided for 80-column printers.

Option 122.b. requires that 80-column printers be optioned with Option 17.c. (right margin at 80th column) and 132-column printers be optioned with Option 17.e. (right margin at 132nd column).

Cut and remove (⊠) the diode(s) corresponding to the desired horizontal tab setting(s), as shown in Table E. Also cut and remove the diode representing the last printing column of the printer.

▭ Diode left in.
⊠ Diode cut and removed.
*Factory installed.

Diodes R33, b4 through b6 have no present application and should be left in place.

When optioning for multipoint private line or 40/3 systems, cut and remove ( ) diode R33, b7 for diagnostic testing in conjunction with Option 124.b.

TABLE E

HORIZONTAL TAB SETTING DIODE

TAB COLUMN	TAB DIODE	TAB COLUMN	TAB DIODE	TAB COLUMN	TAB DIODE	TAB COLUMN	TAB DIODE
		34	R21, b1	67	R25, b2	100	R29, b3
2	R17, b1	35	R21, b2	68	R25, b3	101	R29, b4
3	R17, b2	36	R21, b3	69	R25, b4	102	R29, b5
4	R17, b3	37	R21, b4	70	R25, b5	103	R29, b6
5	R17, b4	38	R21, b5	71	R25, b6	104	R29, b7
6	R17, b5	39	R21, b6	72	R25, b7	105	R30, b0
7	R17, b6	40	R21, b7	73	R26, b0	106	R30, b1
8	R17, b7	41	R22, b0	74	R26, b1	107	R30, b2
9	R18, b0	42	R22, b1	75	R26, b2	108	R30, b3
10	R18, b1	43	R22, b2	76	R26, b3	109	R30, b4
11	R18, b2	44	R22, b3	77	R26, b4	110	R30, b5
12	R18, b3	45	R22, b4	78	R26, b5	111	R30, b6
13	R18, b4	46	R22, b5	79	R26, b6	112	R30, b7
14	R18, b5	47	R22, b6	80	R26, b7	113	R31, b0
15	R18, b6	48	R22, b7	81	R27, b0	114	R31, b1
16	R18, b7	49	R23, b0	82	R27, b1	115	R31, b2
17	R19, b0	50	R23, b1	83	R27, b2	116	R31, b3
18	R19, b1	51	R23, b2	84	R27, b3	117	R31, b4
19	R19, b2	52	R23, b3	85	R27, b4	118	R31, b5
20	R19, b3	53	R23, b4	86	R27, b5	119	R31, b6
21	R19, b4	54	R23, b5	87	R27, b6	120	R31, b7
22	R19, b5	55	R23, b6	88	R27, b7	121	R32, b0
23	R19, b6	56	R23, b7	89	R28, b0	122	R32, b1
24	R19, b7	57	R24, b0	90	R28, b1	123	R32, b2
25	R20, b0	58	R24, b1	91	R28, b2	124	R32, b3
26	R20, b1	59	R24, b2	92	R28, b3	125	R32, b4
27	R20, b2	60	R24, b3	93	R28, b4	126	R32, b5
28	R20, b3	61	R24, b4	94	R28, b5	127	R32, b6
29	R20, b4	62	R24, b5	95	R28, b6	128	R32, b7
30	R20, b5	63	R24, b6	96	R28, b7	129	R33, b0
31	R20, b6	64	R24, b7	97	R29, b0	130	R33, b1
32	R20, b7	65	R25, b0	98	R29, b1	131	R33, b2
33	R21, b0	66	R25, b1	99	R29, b2	132	R33, b3

A. GENERAL (Cont)

1. DESCRIPTION (Cont)

410141 Diode Matrix Circuit Card (Cont)

Example: Option 122.b. shown optioned for 80-column printer with tab stops at printer columns 10, 20, 30, 40, 50, 60, 70 and with diode representing 80th column (R26, b7) removed.

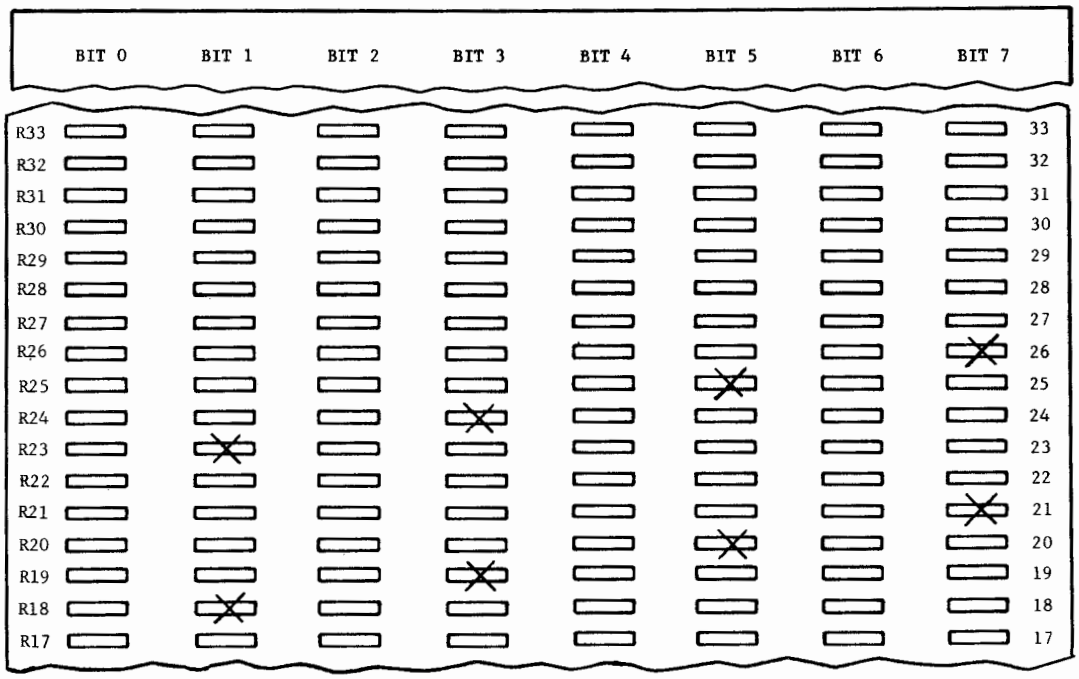

123.	Vertical Tabulation Settings	R34, b1 to R42, b7	
a.	No Vertical Tab Settings (See Note)	(ALL)	*
b.	Preprogrammed Vertical Tab Settings for Any Line 2 Through 72 Lines (See Note)	Table F	

NOTE: Diode R34, b0 is NOT cut for Option 123.a. or b.

When selecting vertical tab settings for a particular customer application, remember that the printer line feeds and tabs vertically at 6 or 8 lines per inch unless modified to feed 4 lines per inch for large gothic type fonts. Also, Option 20.b. (double line feed) will, if selected, cause the vertical tab settings to be double the length shown in Table F.

Diode left in.
Diode cut and removed.
*Factory installed.

Vertical tab settings that would tab the printer into the next form should obviously be avoided. For example, an 11-inch form would not have a tab setting optioned beyond line 65 of the form.

TABLE F

VERTICAL TAB SETTING DIODE

TAB LINE	TAB DIODE	TAB LINE	TAB DIODE	TAB LINE	TAB DIODE	TAB LINE	TAB DIODE
		19	R36, b2	37	R38, b4	55	R40, b6
2	R34, b1	20	R36, b3	38	R38, b5	56	R40, b7
3	R34, b2	21	R36, b4	39	R38, b6	57	R41, b0
4	R34, b3	22	R36, b5	40	R38, b7	58	R41, b1
5	R34, b4	23	R36, b6	41	R39, b0	59	R41, b2
6	R34, b5	24	R36, b7	42	R39, b1	60	R41, b3
7	R34, b6	25	R37, b0	43	R39, b2	61	R41, b4
8	R34, b7	26	R37, b1	44	R39, b3	62	R41, b5
9	R35, b0	27	R37, b2	45	R39, b4	63	R41, b6
10	R35, b1	28	R37, b3	46	R39, b5	64	R41, b7
11	R35, b2	29	R37, b4	47	R39, b6	65	R42, b0
12	R35, b3	30	R37, b5	48	R39, b7	66	R42, b1
13	R35, b4	31	R37, b6	49	R40, b0	67	R42, b2
14	R35, b5	32	R37, b7	50	R40, b1	68	R42, b3
15	R35, b6	33	R38, b0	51	R40, b2	69	R42, b4
16	R35, b7	34	R38, b1	52	R40, b3	70	R42, b5
17	R36, b0	35	R38, b2	53	R40, b4	71	R42, b6
18	R36, b1	36	R38, b3	54	R40, b5	72	R42, b7

Example: Option 123.b. shown selected to accommodate an 11-inch form with vertical tab stop settings at 10, 20, 30, 45, and 60 lines.

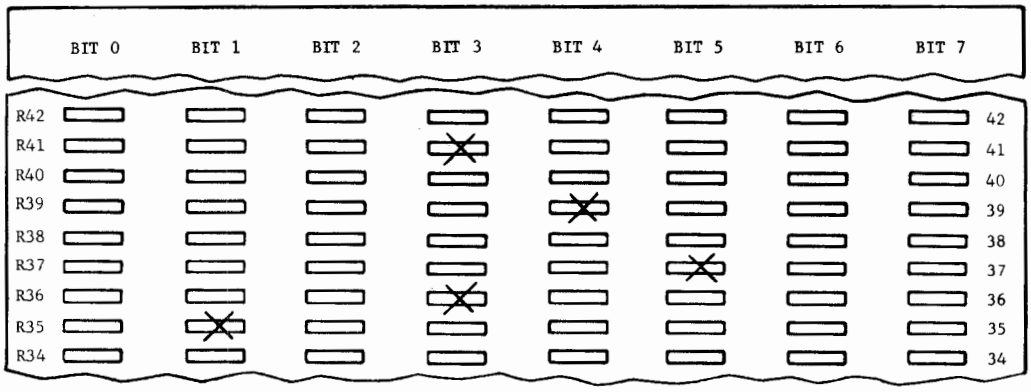

Diode left in.
Diode cut and removed.

A. GENERAL (Cont)

1. DESCRIPTION (Cont)

410141 Diode Matrix Circuit Card (Cont)

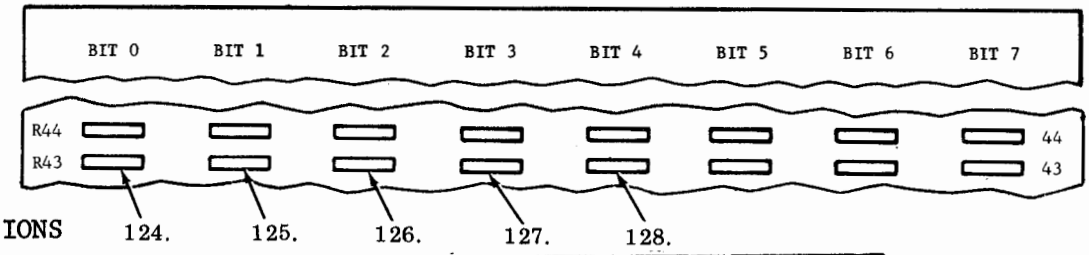

124.	Receipt of ENQ Starts Switched Network Answer-Back/ Multipoint Private Line Diagnostic Test	R43, b0	
a.	ENQ Does Not Start Answer-Back/Test	▭	*
b.	ENQ Starts Answer-Back/Test	⊠	

NOTE: When Option 124.b. is selected, also cut and remove diode at R33, b7 as mentioned in Option 122.

125.	Type of Printer Used	R43, b1
a.	80-Column Printer	▭
b.	132-Column Printer	⊠

NOTE: Option 125. is not present when EPROMs 404602, 404603, 404604 and 404605 are of issue 3 or higher, EPROMs are located on circuit card 410142. See Option 191.

126.	Pulse or Tone Generated on Receipt of BEL	R43, b2	
a.	Received BEL Character Does Not Cause Pulse or Tone	▭	*
b.	Received BEL Character (ASCII or — if Option 127.b., 138.b., or 139.b. is selected — Baudot or Teletypesetter Code No. 1 or No. 2) Causes 1-Second Pulse or Tone Generation	⊠	

NOTE: Pulse generation on paper out or internal alarm is always provided (not an option). Option 126. controls only the additional feature of pulse generation on receipt of the BEL character. Tone generation in all cases requires addition of a 403418 audible alarm modification kit (for ROP Terminals) or other arrangements. Consecutive BEL characters must be received more than one second apart for more than one tone to be heard.

127.	Baudot Code Converted to ASCII	R43, b3	
a.	Baudot Code Not Accepted	▭	*
b.	Baudot Code Converted to ASCII for Printer	⊠	

NOTE: If an answer-back is desired, it must be coded in Baudot as detailed in Option 119. The answer-back will then be sent on-line in Baudot code but printed by the ROP (if Option 145.b. is selected) in ASCII. Type carriers for fractions and weather for BAUDOT are not available.

128.	Shift In/Shift Out (SI/SO) Detection	R43, b4	
a.	SI/SO Detection Not Used	▭	*
b.	SI/SO Detection Enables Printing Additional Characters	⊠	

▭ Diode left in.
⊠ Diode cut and removed.
*Factory installed.

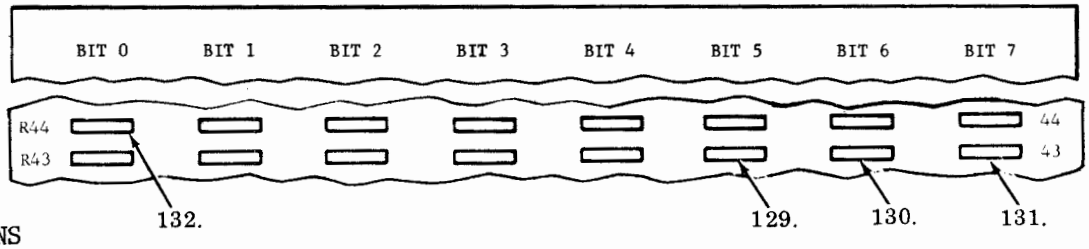

OPTIONS

129.	Horizontal Tabulation	R43, b5	
a.	HT Character Ignored by ROP	▭	*
b.	HT Character Causes Horizontal Tab as Selected in Option 122. or Set On-Line	⊠	

NOTE: Option 129.b. requires that Option 17.c. or e. be activated. Individual tab stops are set on-line upon receipt of ESC 1 (one tab per each received ESC 1): ESC 2 clears all tabs at the point and to the right of the point entered, up to the end of line. On-line tab selection overrides the fixed optioning of Option 122.b. A disconnect, or deselect (delayed up to one minute), clears all on-line tab stops and restores any preselected tab stops.

130.	Vertical Tabulation	R43, b6	
a.	VT Character Causes Line Feed	▭	*
b.	VT Character Causes Vertical Tab as Selected in Option 123. or Set On-Line	⊠	

NOTE: Individual tab stops are set on-line upon receipt of ESC 5 (one tab per each received ESC 5). ESC 6 clears all tabs at the point and below the point entered, up to the end of the tab stops. On-line tab selection overrides the fixed optioning of Option 123.b. A disconnect, or deselect (delayed up to one minute) clears all on-line tab stops and restores any preselected tab stops.

131.	Left Margin	R43, b7	
a.	Left Margin Begins at Column 1 Regardless of Selection of Options 121. and 122.	▭	*
b.	Left Margin Begins as Selected in Option 121.	⊠	

NOTE: Option 131.b. requires that Option 17.c. or e. be activated.

132.	Printing of Escape Sequences Suppressed	R44, b0	
a.	Character After ESC Printed as Received	▭	*
b.	Printing of Character After ESC Suppressed	⊠	

NOTE: With Option 132.b. activated, the character after ESC will be suppressed only if ESC is preceded by a non-ESC character. For example, if ESC ESC X is received, X will be printed.

▭ Diode left in.
⊠ Diode cut and removed.
*Factory installed.

A. GENERAL (Cont)

1. DESCRIPTION (Cont)

410141 Diode Matrix Circuit Card (Cont)

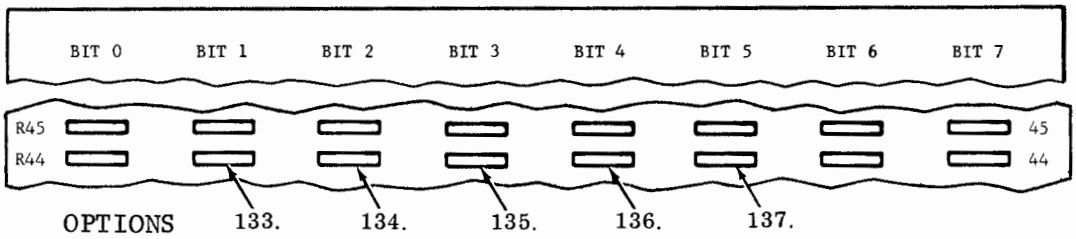

133.	DLE EOT/EOT Disconnect	R44, b1	
a.	DLE EOT Sequence Causes Disconnect or Deselect (No Disconnect or Deselect on EOT Alone)	▭	*
b.	EOT Causes Disconnect or Deselect	⊠	

NOTE: Either of the above in conjunction with Option 141.a. causes a disconnect provided Option 140.a. is activated. Either of the above in conjunction with Option 141.b. causes a deselect.

134.	On-Line Printer Control	R44, b2	
a.	DC2 and DC4 Ignored by ROP	▭	*
b.	DC4 Blinds Printer, DC2 Unblinds Printer	⊠	

135.	Idle Line Disconnect	R44, b3	
a.	No Disconnect on Idle Line	▭	*
b.	Disconnect After Idle Line of Approximately 30 Seconds	⊠	

NOTE: Option 135.b. requires that Option 140.a. be activated. See Option 148. for details of motor turn-off delay action in conjunction with Option 135.

136.	Normal/Inverted SI/SO	R44, b4	
a.	Normal (SI = ASCII)	▭	*
b.	Inverted (SO = ASCII)	⊠	

NOTE: Option 136.b. inverts Option 128.b.

137.	Carrier Fail Disconnect	R44, b5	
a.	No Disconnect on Carrier Fail	▭	*
b.	Disconnect After No Carrier for Approximately 15 Seconds	⊠	

NOTE: Option 137.b. requires that Options 140.a. and 144.a. be activated.

▭ Diode left in.
⊠ Diode cut and removed.
*Factory installed.

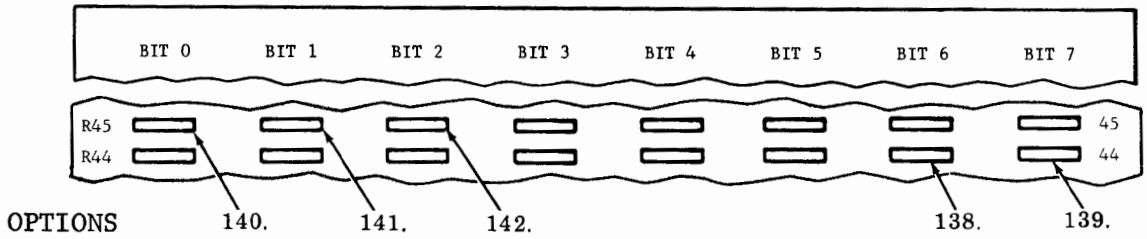

138.	Teletypesetter Code No. 1 Converted to ASCII	R44, b6	
a.	Teletypesetter Code No. 1 Not Accepted	▭	*
b.	Teletypesetter Code No. 1 Converted to ASCII for Printer	⊠	

NOTE: Teletypesetter Code No. 1 is defined as Teletypesetter code with the bits transmitted in the sequence 0, 1, 2, 3, 4, 5 (normally used for high speed transmission). Appropriate type carrier is required.

139.	Teletypesetter Code No. 2 Converted to ASCII	R44, b7	
a.	Teletypesetter Code No. 2 Not Accepted	▭	*
b.	Teletypesetter Code No. 2 Converted to ASCII for Printer	⊠	

NOTE: Teletypesetter Code No. 2 is defined as Teletypesetter code with the bits transmitted in the sequence 1, 2, 3, 4, 5, 0 (normally used for low speed transmission). Appropriate type carrier is required.

140.	Interface to Transmission Facilities	R45, b0	
a.	EIA	▭	*
b.	20/60 mA	⊠	

NOTE: Option 140.b. disables Options 111.b., 118.b., 135.b. and 137.b., all of which are related to the EIA "hand shaking" routine between the ROP and the data set.

141.	Data Link Control Procedures	R45, b1	
a.	Switched Network and Point-to-Point Private Line Applications	▭	*
b.	Multipoint Private Line Applications	⊠	

142.	Automatic Answer Starts Switched Network Answer-Back	R45, b2	
a.	Auto Answer Does Not Start Answer-Back	▭	*
b.	Auto Answer Starts Answer-Back	⊠	

NOTE: Option 142.b. requires that Options 140.a. and 151.a. be activated. It is recommended that Options 135.b. and 137.b. also be enabled to prevent possible system delays after aborted calls.

▭ Diode left in.
⊠ Diode cut and removed.
*Factory installed.

A. GENERAL (Cont)

1. DESCRIPTION (Cont)

410141 Diode Matrix Circuit Card (Cont)

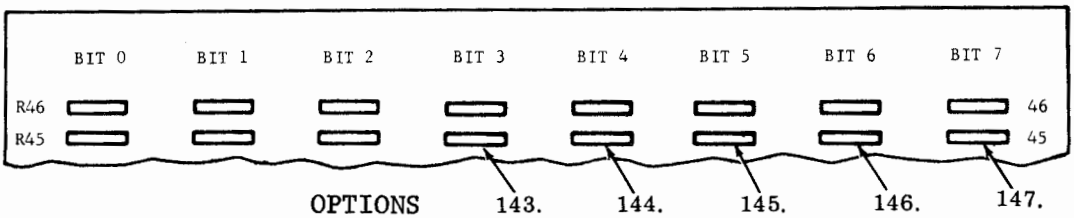

143.	Reverse Channel Used/Not Used	R45, b3	
a.	Reverse Channel Not Used — Minimum 400 Milliseconds of Line Break Generated to Stop Sender	▭	*
b.	Reverse Channel Send and Receive (SCA and SCF) Used — SCA Turned OFF to Stop Sender, SCF ON Required to Send Answer-Back	⊠	

NOTE: The following conditions will cause the controller to stop the sender by generating a line break (Option 143.a.) or turning SCA off (Option 143.b.):

(1) Buffer 90% full. Sender restarted when buffer down to 25% full.
(2) Manually depressing opcon INTRPT key, when provided.

144.	Monitor Receive Data on Data Carrier Detect (CF) or Data Set Ready (CC)	R45, b4	
a.	Monitor Receive Data on Recognition of CC and CF ON	▭	*
b.	Monitor Receive Data on Recognition of CC ON	⊠	

145.	Local Copy of Switched Network Answer-Back	R45, b5	
a.	No Local Copy of Answer-Back	▭	*
b.	Local Copy of Answer-Back	⊠	

146.	Friction Feed/Tractor Feed Printer	R45, b6	
a.	Friction Feed Printer — Paper Alarm Causes AB 2 to be Sent on Next CDC or Data Terminal Ready (CD) OFF on New Call	▭	*
b.	Tractor Feed Printer — Paper Alarm Causes Immediate Disconnect	⊠	

147.	Buffer Fully Enabled/Minimum Usage of Buffer	R45, b7	
a.	Buffer Fully Enabled — Data Flow to Printer Controlled by Printer Request-Next-Character Signal to Avoid Data Stacking	▭	*
b.	Minimum Usage of Buffer — Data Sent to Printer at Approximately Same Rate as Received	⊠	

▭ Diode left in.
⊠ Diode cut and removed.
*Factory installed.

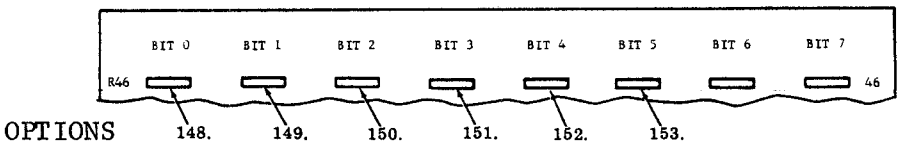

148.	Motor Turn-Off Delay	R46, b0	
a.	Minimum Delay — Motor Turns Off Approximately 30 Seconds After Detection of Idle Line	▭	*
b.	Maximum Delay — Motor Turn Off Delayed Approximately 2 Minutes After Detection of Idle Line	⊠	

NOTE: After 30 seconds of idle line time and with Option 135.b. activated, a disconnect or deselect as stated in Option 133. takes place. At this time, and with Option 148.a. activated the motor is turned off. With Option 148.b. activated, motor turn off is delayed an additional 2 minutes. In switched network applications the motor will turn off immediately upon detection of the disconnect sequence (DLE EOT or EOT) if 148.a. is selected; if 148.b. is selected, the two minute delay is enabled.

149.	New Line Substitution on Carriage Return	R46, b1	
a.	Carriage Return Passed to Printer	▭	*
b.	New Line Substituted for Carriage Return	⊠	

150.	DATA ERROR Lamp Used/Not Used	R46, b2	
a.	DATA ERROR Lamp Lit on Parity Error	▭	*
b.	DATA ERROR Lamp Not Used to Indicate Parity Errors	⊠	

151.	Switched Network/Private Line Applications	R46, b3	
a.	Switched Network Applications — Data Set Ready (CC) ON Turns on Motor	▭	*
b.	Private Line Applications — Character in Buffer Turns on Motor	⊠	

152.	Errored Character/Substitute Character to Printer on Parity Error	R46, b4	
a.	Errored Character Sent to Printer (See Note)	▭	*
b.	Substitute Character, (Type Carrier Symbol on Monocase Without Foldover or ~ on Up-Low Printers Without Foldover) Sent to Printer on Parity Error	⊠	

NOTE: On printers with foldover, ^ will be sent rather than the symbol shown for 152.b.

▭ Diode left in.
⊠ Diode cut and removed.
*Factory installed.

A. GENERAL (Cont)

1. DESCRIPTION (Cont)

410141 Diode Matrix Circuit Card (Cont)

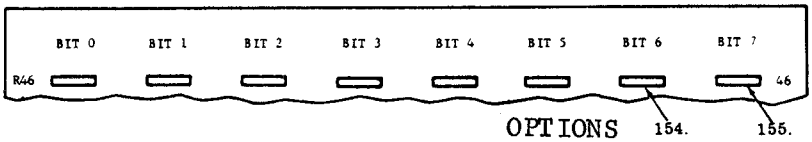

154.	Future Use	R46, b6
a.	All Present Applications	▭ *
b.	Possible Future Use	⊠

155.	Future Use	R46, b7
a.	All Present Applications	▭ *
b.	Possible Future Use	⊠

▭ Diode left in.
⊠ Diode cut and removed.
*Factory installed.

NOTE: Do not alter factory installation for Options 153., 154., and 155.

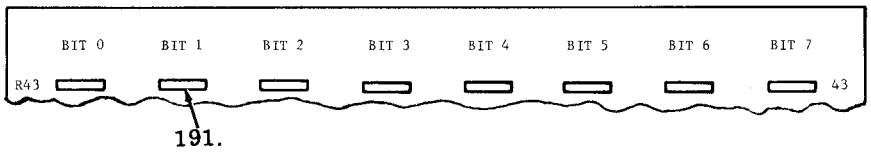

191.	Line Wraparound Operation	R43,b1
a.	Line Wraparound Performed by Printer	▭ *
b.	Line Wraparound Performed by Controller	⊠

NOTE 1: Option 191. is present only when EPROMs 404602, 404603 and 404605 are of issue 3 or higher. EPROMs are located on circuit card 410142. See Option 125.

NOTE 2: Use Option 191.a. when the right-hand margin is determined by printer Option 17.c., d., e., or f. (a new line will be provided by the printer if data continues beyond this point); use Option 191.b. when the right-hand margin is determined by Option 122. (A new line will be provided by the controller if data continues beyond this point).

410727 Controller Card

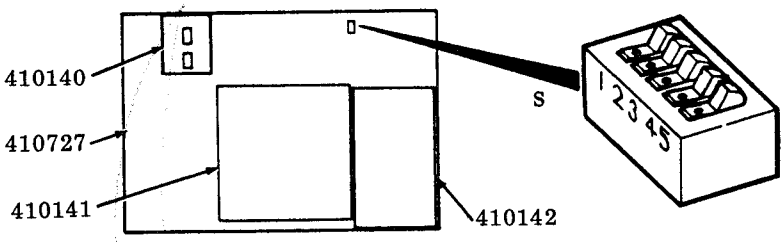

*Factory installed.

156.	Number of Data Bits Per Character (Excluding Parity Bit, if Used)	S 2	S 3	
a.	5 Bits Per Character (Baudot Code)	●	●	
b.	6 Bits Per Character (Teletypesetter Code)	○	●	
c.	7 Bits Per Character (ASCII Code With Parity)	●	○	*
d.	8 Bits Per Character (ASCII Code Without Parity)	○	○	

157.	Number of Stop Bits Per Character	S 4	
a.	1 Stop Bit	●	*
b.	2 Stop Bits	○	

158.	Parity Used	S 1	S 5	
a.	Odd Parity Used	●	●	
b.	Even Parity Used	○	●	*
c.	No Parity Check or Parity Bit Used	—	○	

NOTE: 158.a. and b. require Option 156.c. for ASCII with one parity bit; 158.c. requires Option 156.d. for ASCII with 8th bit constantly marking or spacing, or present but not checked for parity.

Activating Cabinet Options

407077 EIA Signal Input Assembly

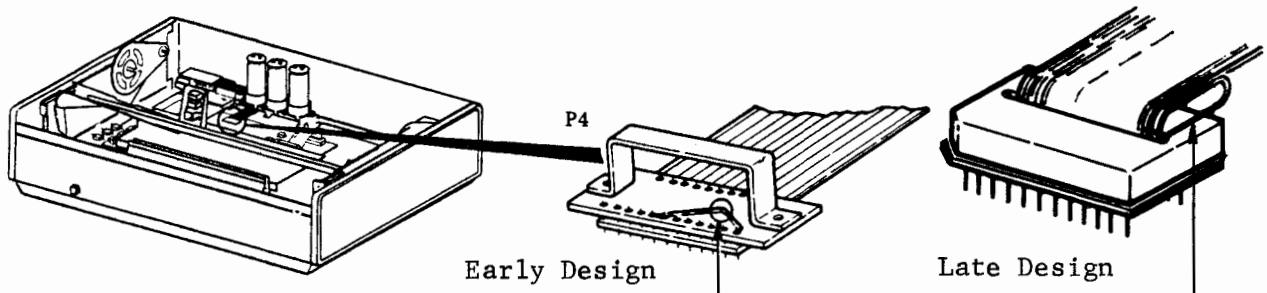

	Ground Connection	Action Required	
a.	Frame Ground Connected to Signal Ground in Cabinet at P4	None	*
b.	Frame Ground Not Connected to Signal Ground in Cabinet at P4	Cut Land at P4 or Lead	

NOTE: Where a longer than normal 408065 cable for connecting ROP and data set is used, and when electrical noise is a problem, the frame ground to signal ground connection may be broken at the ROP (Option b.) or in the data set. DO NOT break the ground connection at BOTH places as proper operation of the internal test message will be affected.

● Indicates dot end of rocker switch depressed, toggle or slide positioned to ON.
○ Indicates blank end of rocker switch depressed, toggle or slide positioned to OFF.
— Position of switch does not affect option.
*Factory installed.

A. GENERAL (Cont)

1. DESCRIPTION (Cont)

Integrated Synchronous 40C303AC/003 ROP Controller Options

Options in the integrated controller are selected by setting miniature slide, toggle, or rocker switches on the 410733 circuit card or by cutting diodes on the 410734 diode matrix circuit card. The ROP controller options are listed below and numbered 121. through 190., some of which are not applicable or not present. Options 124., 126.-130., 132.-147., and 149.-158. are not present in the Integrated Synchronous ROP Controller.

Activating Controller Options

410734 Diode Matrix Circuit Card

121.	Left Margin Setting	R1, b0 to R2, b7
a.	Left Margin at Column 1 (See Note)	All
b.	Left Margin at Column 2 or Beyond	Table G

NOTE: Diode R1 b0 is NOT cut for Option 121.a. or b.

TABLE G

LEFT MARGIN DIODE LOCATION

COLUMN	DIODE	COLUMN	DIODE
		9	R2, b0
2	R1, b1	10	R2, b1
3	R1, b2	11	R2, b2
4	R1, b3	12	R2, b3
5	R1, b4	13	R2, b4
6	R1, b5	14	R2, b5
7	R1, b6	15	R2, b6
8	R1, b7	16	R2, b7

Cut and remove ( ) only the diode corresponding to the desired left margin position (printer column) as listed in Table G. If the printer left margin is required to be at column 17 or beyond, refer to the table for Option 122. for the diode location. See Note above for exception.

Option 121.b. requires selection of Option 131.b.
Example: Option 121.b. shown selected for printer left margin at printer column 4.

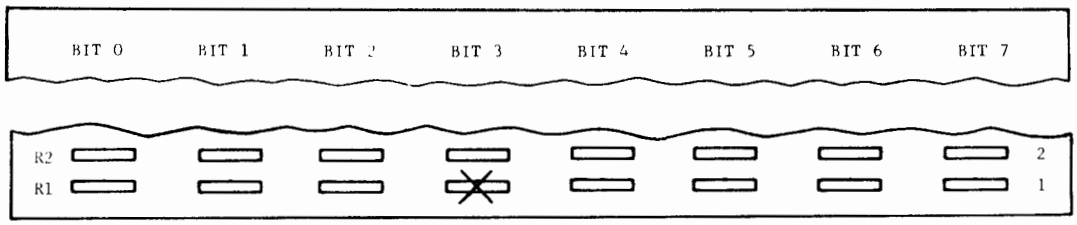

Diode left in.
Diode cut and removed.

122.	Horizontal Tabulation Settings	R1, b0 to R17, b3
a.	No Horizontal Tab Settings (See Note)	(ALL)
b.	Preselected Horizontal Tab Settings in Any Column Through 80 (80-Column Printer) or Through 132 (132-Column Printer) (See Note)	Table H

NOTE: Diode R1, b0 is NOT cut for Option 122.a. or b.

When selecting horizontal tab settings for a particular customer application, remember that the printer spaces, prints, and tabs at 10 character/columns per inch.

Horizontal tab settings to the left of, or the same as, the left margin setting of Option 121.b. should be avoided. Cutting and removing a lower numbered diode than chosen for the left margin setting will result in a new left margin at a lower numbered column and the left margin established by Option 121.b. will become a horizontal tab stop. Similarly, horizontal tab selecting beyond 80 columns must be avoided for 80-column printers.

Cut and remove ( ) the diode(s) corresponding to the desired horizontal tab setting(s), as shown in Table H.

Diode left in.
Diode cut and removed.

A. GENERAL (Cont)

1. DESCRIPTION (Cont)

410734 Diode Matrix Circuit Card (Cont)

Diodes R17, b4 through b7 have no present application and should be left in place.

TABLE H

HORIZONTAL TAB SETTING DIODE

TAB COLUMN	TAB DIODE	TAB COLUMN	TAB DIODE	TAB COLUMN	TAB DIODE	TAB COLUMN	TAB DIODE
1	R1,b0	34	R5,b1	67	R9,b2	100	R13,b3
2	R1,b1	35	R5,b2	68	R9,b3	101	R13,b4
3	R1,b2	36	R5,b3	69	R9,b4	102	R13,b5
4	R1,b3	37	R5,b4	70	R9,b5	103	R13,b6
5	R1,b4	38	R5,b5	71	R9,b6	104	R13,b7
6	R1,b5	39	R5,b6	72	R9,b7	105	R14,b0
7	R1,b6	40	R5,b7	73	R10,b0	106	R14,b1
8	R1,b7	41	R6,b0	74	R10,b1	107	R14,b2
9	R2,b0	42	R6,b1	75	R10,b2	108	R14,b3
10	R2,b1	43	R6,b2	76	R10,b3	109	R14,b4
11	R2,b2	44	R6,b3	77	R10,b4	110	R14,b5
12	R2,b3	45	R6,b4	78	R10,b5	111	R14,b6
13	R2,b4	46	R6,b5	79	R10,b6	112	R14,b7
14	R2,b5	47	R6,b6	80	R10,b7	113	R15,b0
15	R2,b6	48	R6,b7	81	R11,b0	114	R15,b1
16	R2,b7	49	R7,b0	82	R11,b1	115	R15,b2
17	R3,b0	50	R7,b1	83	R11,b2	116	R15,b3
18	R3,b1	51	R7,b2	84	R11,b3	117	R15,b4
19	R3,b2	52	R7,b3	85	R11,b4	118	R15,b5
20	R3,b3	53	R7,b4	86	R11,b5	119	R15,b6
21	R3,b4	54	R7,b5	87	R11,b6	120	R15,b7
22	R3,b5	55	R7,b6	88	R11,b7	121	R16,b0
23	R3,b6	56	R7,b7	89	R12,b0	122	R16,b1
24	R3,b7	57	R8,b0	90	R12,b1	123	R16,b2
25	R4,b0	58	R8,b1	91	R12,b2	124	R16,b3
26	R4,b1	59	R8,b2	92	R12,b3	125	R16,b4
27	R4,b2	60	R8,b3	93	R12,b4	126	R16,b5
28	R4,b3	61	R8,b4	94	R12,b5	127	R16,b6
29	R4,b4	62	R8,b5	95	R12,b6	128	R16,b7
30	R4,b5	63	R8,b6	96	R12,b7	129	R17,b0
31	R4,b6	64	R8,b7	97	R13,b0	130	R17,b1
32	R4,b7	65	R9,b0	98	R13,b1	131	R17,b2
33	R5,b0	66	R9,b1	99	R13,b2	132	R17,b3

410734 Diode Matrix Circuit Card (Cont)

Example: Option 122.b. shown optioned for 80-column printer with tab stops at printer columns 10, 20, 30, 40, 50, 60 and 70 and with diode representing 80th column (R10, b7) removed.

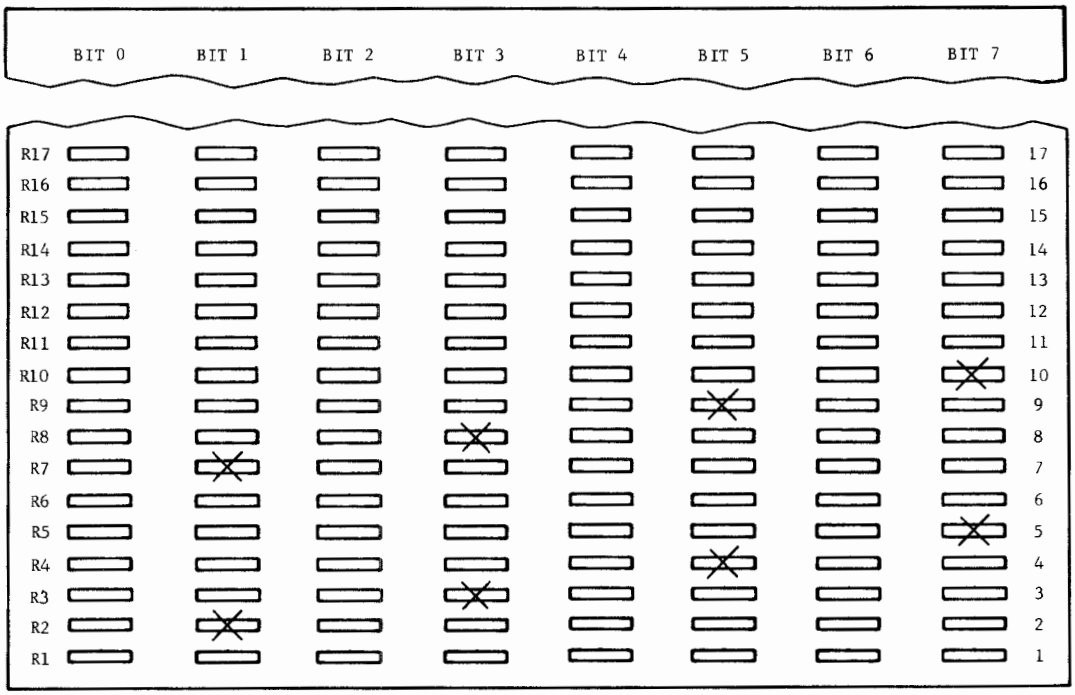

123.	Vertical Tab Settings	R18, b0 to R29, b7
a.	No Vertical Tab Settings	(ALL)
c.	1st Vertical Tab Line	R18, TABLE I
d.	2nd Vertical Tab Line	R19, TABLE I
e.	3rd Vertical Tab Line	R20, TABLE I
f.	4th Vertical Tab Line	R21, TABLE I
g.	5th Vertical Tab Line	R22, TABLE I
h.	6th Vertical Tab Line	R23, TABLE I
i.	7th Vertical Tab Line	R24, TABLE I
j.	8th Vertical Tab Line	R25, TABLE I
k.	9th Vertical Tab Line	R26, TABLE I
l.	10th Vertical Tab Line	R27, TABLE I
m.	11th Vertical Tab Line	R28, TABLE I
n.	12th Vertical Tab Line	R29, TABLE I

Diode left in.
Diode cut and removed.

A. GENERAL (Cont)

1. DESCRIPTION (Cont)

410734 Diode Matrix Circuit Card (Cont)

When selecting vertical tab settings for a particular customer application, remember that the printer line feeds and tabs vertically at 6 lines per inch. Also, Option 20.b. (double line feed) will, if selected, cause the vertical tab settings to be double the length shown in Table I.

Vertical tab settings that would tab the printer into the next form should be avoided. For example, an 11-inch form would not have a tab setting optioned beyond line 65 of the form.

Selections must be made in increasing line number from 1st vertical tab through 12th vertical tab line. When less than 12 vertical tabs are required, the unused positions (starting with the "12th" vertical tab line) must have all diodes left in.

TABLE I

VERTICAL TAB SETTING DIODE

TAB LINE	DIODE POSITION**	TAB LINE	DIODE POSITION**	TAB LINE	DIODE POSITION**	TAB LINE	DIODE POSITION**	TAB LINE	DIODE POSITION**
1	0	28	2,3,4	55	0,1,2,4,5	82	1,4,6	109	0,2,3,5,6
2	1	29	0,2,3,4	56	3,4,5	83	0,1,4,6	110	1,2,3,5,6
3	0,1	30	1,2,3,4	57	0,3,4,5	84	2,4,6	111	0,1,2,3,5,6
4	2	31	0,1,2,3,4	58	1,3,4,5	85	0,2,4,6	112	4,5,6
5	0,2	32	5	59	0,1,3,4,5	86	1,2,4,6	113	0,4,5,6
6	1,2	33	0,5	60	2,3,4,5	87	0,1,2,4,6	114	1,4,5,6
7	0,1,2	34	1,5	61	0,2,3,4,5	88	3,4,6	115	0,1,4,5,6
8	3	35	0,1,5	62	1,2,3,4,5	89	0,3,4,6	116	2,4,5,6
9	0,3	36	2,5	63	0,1,2,3,4,5	90	1,3,4,6	117	0,2,4,5,6
10	1,3	37	0,2,5	64	6	91	0,1,3,4,6	118	1,2,4,5,6
11	0,1,3	38	1,2,5	65	0,6	92	2,3,4,6	119	0,1,2,4,5,6
12	2,3	39	0,1,2,5	66	1,6	93	0,2,3,4,6	120	3,4,5,6
13	0,2,3	40	3,5	67	0,1,6	94	1,2,3,4,6	121	0,3,4,5,6
14	1,2,3	41	0,3,5	68	2,6	95	0,1,2,3,4,6	122	1,3,4,5,6
15	0,1,2,3	42	1,3,5	69	0,2,6	96	5,6	123	0,1,3,4,5,6
16	4	43	0,1,3,5	70	1,2,6	97	0,5,6	124	2,3,4,5,6
17	0,4	44	2,3,5	71	0,1,2,6	98	1,5,6	125	0,2,3,4,5,6
18	1,4	45	0,2,3,5	72	3,6	99	0,1,5,6	126	1,2,3,4,5,6
19	0,1,4	46	1,2,3,5	73	0,3,6	100	2,5,6	127	0,1,2,3,4,5,6
20	2,4	47	0,1,2,3,5	74	1,3,6	101	0,2,5,6	128	7
21	0,2,4	48	4,5	75	0,1,3,6	102	1,2,5,6	129	0,7
22	1,2,4	49	0,4,5	76	2,3,6	103	0,1,2,5,6	130	1,7
23	0,1,2,4	50	1,4,5	77	0,2,3,6	104	3,5,6	131	0,1,7
24	3,4	51	0,1,4,5	78	1,2,3,6	105	0,3,5,6	132	2,7
25	0,3,4	52	2,4,5	79	0,1,2,3,6	106	1,3,5,6		
26	1,3,4	53	0,2,4,5	80	4,6	107	0,1,3,5,6		
27	0,1,3,4	54	1,2,4,5	81	0,4,6	108	2,3,5,6		

**Diode position is preceded by "b".
Diodes indicated by diode position number must be cut and removed.

Example: Option 123. shown selected to accommodate an 11-inch form with vertical tab stop settings at 10, 20, 30, 45, and 60 lines.

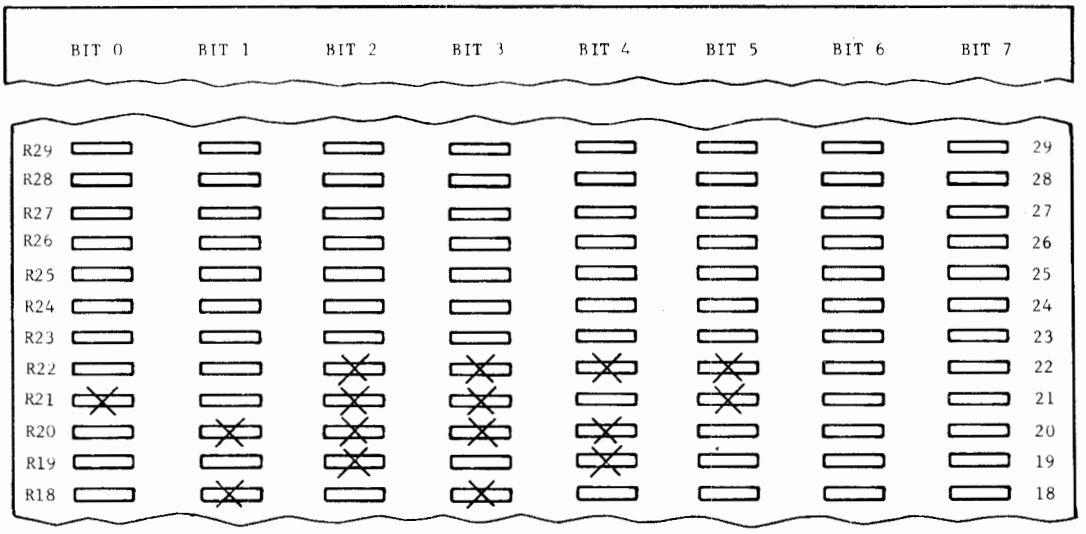

124. Not Present

125.	Type of Printer Used	R46, b6
a.	80-Column Printer	▭
b.	132-Column Printer	⊠

NOTE: Option 125. will be factory installed to match the printer used.

126.– 130. Not Present

131.	Left Margin	R46, b4	
a.	Left Margin Begins at Column 1 Regardless of Selection of Options 121. and 122.	▭	*
b.	Left Margin Begins as Selected in Option 121.	⊠	

132.– 147. Not Present

148.	Motor Turn-Off Delay	R46, b5	
a.	Minimum Delay — Motor Turns Off Approximately 30 Seconds After Buffer Empties	▭	*
b.	Maximum Delay — Motor Turn Off Delayed Approximately 3 Minutes After Buffer Empties	⊠	

149.– 158. Not Present

▭ Diode left in.
⊠ Diode cut and removed.
*Factory installed.

A. GENERAL (Cont)

1. DESCRIPTION (Cont)

410734 Diode Matrix Circuit Card (Cont)

159.	Variable Characters for System Operation (Notes 1, 2, 3)	DIODE ASSIGNMENT		
		ROW	COLUMN	
			ASCII	EBCDIC
a.	Programmable Character 1 (Notes 4, 11, 13)	R43	b0-b6	b0-b7
b.	Programmable Character 2 (Notes 5, 11, 12)	R42	b0-b6	b0-b7
c.	Programmable Character 3 (Notes 6, 12)	R41	b0-b6	b0-b7
d.	Programmable Character 4 (Notes 7, 12)	R40	b0-b6	b0-b7
e.	Programmable Character 5 (Note 8)	R39	b0-b6	b0-b7
f.	Programmable Character 6 (Notes 9, 12)	R38	b0-b6	b0-b7
g.	Programmable Character 7 (Notes 10, 12)	R37	b0-b6	b0-b7
h.	Programmable Character 8 (DLE)	R36	b0-b6	b0-b7
i.	Programmable Character 9 (ZERO)	R35	b0-b6	b0-b7
j.	Programmable Character 10 (ONE)	R34	b0-b6	b0-b7
k.	Programmable Character 11 (EOT)	R33	b0-b6	b0-b7
l.	Programmable Character 12 (NAK)	R32	b0-b6	b0-b7
m.	Programmable Character 13 (ENQ)	R31	b0-b6	b0-b7
n.	Programmable Character 14 (Note 15)	R30	b0-b6	b0-b7

NOTE 1: Program a character for each position except as noted. Remove a diode to encode a mark; retain the diode to encode a space.

NOTE 2: If Option 160.a. (ASCII) is used data bits 1 through 7 are encoded by diodes b0 through b6 respectively. Diode b7 must be encoded to provide odd parity for the character.

NOTE 3: If Option 160.b. (EBCDIC) is used, data bits 7 through 0 are encoded by diodes b0 through b7.

NOTE 4: 159.a. is used to program the α character in Option 171.c. and the α_1 character (selection sequences and replies) in Options 171.d., e., f., g., and h. 159.a. should be left uncoded if Option 171.a. or b. is enabled.

NOTE 5: 159.b. is used to program the # character in Option 171.c. and the α_2 character (selection sequences and replies) in Options 171.d., c., g., and h. 159.b. should be left uncoded if Option 171.a. is enabled. Option 159.b. is normally encoded the same as 159.a. except when Option 171.c. is enabled.

NOTE 6: 159.c. is used to program the A_2 character in Option 171.h. replies and may be used in future applications for the # character in Option 171.c. 159.c. may be left uncoded if Option 171.c. is enabled and must be left uncoded if Options 171.a., d., e., f., or g. is enabled.

NOTE 7: 159.d. is used to program the B_2 character in Option 171.h. replies and may be used in future applications for the # character in Option 171.c. 159.d. may be left uncoded if Option 171.c. is enabled and must be left uncoded if Options 171.a., d., e., f., or g. is enabled.

NOTE 8: 159.e. is used to program the C_2 character in Option 171.h. replies and should be left uncoded for all other applications.

NOTE 9: 159.f. will be used in future applications to program the DC_n character in Option 171.a., e., and h., and the # character in 171.g. 159.f. must be left uncoded if Option 171.b., c., d., or f. is enabled and may be left uncoded if Option 171.a., e., g., or h. is enabled.

NOTE 10: 159.g. will be used in future applications to program the DC_n character in Options 171.a., e., and h., and the # character in Option 171.g. 159.g. must be left uncoded if Option 171.b., c., d., or f. is enabled and may be left uncoded if Option 171.a., e., g., or h. is enabled.

NOTE 11: Characters encoded for Options 159.a. and b. to represent the α characters (selections and replies) in Options 171.d., e., f., g., and h. must be programmed using upper case letters.

NOTE 12: Characters encoded for Options 159.b., c., d., f., and g. to represent the # or DC_n characters in Options 171.a., c., e., and g. must be programmed exactly as they will be received. If EBCDIC is used, numeric characters may be used in addition to letters.

NOTE 13: The character encoded for 159.a. to represent the α character in Option 171.c. must be programmed exactly as it will be received.

NOTE 14: If characters that may be left uncoded per Notes 5 through 10 are encoded, a character must be selected that is not used in other poll/selection/control functions of the system.

NOTE 15: Option 159.n. is intended for future use and must be left uncoded.

160.	Communication Code-Line Operation	R46, b0	
a.	ASCII	▭	*
b.	EBCDIC	⊠	

161.	Future Use	R46, b1	
a.	All Present Applications	▭	*
b.	Possible Future Use	⊠	

162.	Type Font Length	R46, b2	
a.	64 or 96 Characters	▭	*
b.	48 Characters	⊠	

163.	Future Use	R46, b3	
a.	All Present Applications	▭	*
b.	Possible Future Use	⊠	

164.	Block Size	R45, b0	R45, b1	
a.	128 Characters	▭	⊠	
b.	256 Characters	⊠	▭	
c.	512 Characters	▭	▭	*

▭ Diode left in.
⊠ Diode cut and removed.
*Factory installed.

A. GENERAL (Cont)

1. DESCRIPTION (Cont)

410734 Diode Matrix Circuit Card (Cont)

165.	Future Use	R45, b2
a.	All Present Applications	▭ *
b.	Possible Future Use	⊠

166.	Data Carrier Disconnect	R45, b3
a.	Disconnect if Carrier is Lost for 30 Seconds or No Carrier Within 30 Seconds After Call Connection	▭ *
b.	No Disconnect on Absence of Carrier	⊠

167.	Permanent Request-to-Send (RTS)	R45, b4
a.	RTS ON Only When Required For Transmission	▭ *
b.	RTS ON at All Times That DTR is ON	⊠

168.	Future Use	R45, b5
a.	All Present Applications	▭
b.	Possible Future Use	⊠

169.	Future Use	R45, b6
a.	All Present Applications	▭
b.	Possible Future Use	⊠

170.	Space Extension	R45, b7
a.	Single Space on Space Character	▭
b.	Three Spaces on Space Characters	⊠

171.	Selection Formats (PAD and SYN Characters Omitted)	R44, b0-b7
a.	Point-to-Point Private Line/Switched-Network Without Terminal Identification Providing Device Selection — (Notes 1, 2, 3, 4, 5) E N Q [ ] S T X D C n	⊠ b0
b.	Point-to-Point Private Line/Switched-Network Without Terminal Identification or Device Selection — E N Q [ ] S T X (Notes 2, 3, 4)	⊠ b1
c.	Multipoint Private Line Providing Device Selection — ∝ # E N Q [ ] S T X (Notes 1, 2, 3, 4, 7)	⊠ b2

▭ Diode left in.
⊠ Diode cut and removed.
*Factory installed.

410734 Diode Matrix Circuit Card (Cont)

d.	Multipoint Private Line Without Device Selection — α_1 α_2 E N [ ] S T Q X (Notes 2, 3, 4, 6, 11)	b3
e.	Switched-Network With Terminal Identification — Providing Device Selection — α_A α_B E N [ ] S T Q X D C n (Notes 1, 2, 3, 4, 5, 10, 11)	b4
f.	Switched-Network With Terminal Identification; Without Device Selection — α_A α_B E N [ ] S T Q X (Notes 2, 3, 4, 10)	b5
g.	Multipoint Private Line With Device Selection — α_1 α_2 # E N [ ] S T Q X (Notes 1, 2, 3, 4, 6, 8, 11)	b6
h.	Switched-Network Providing Device Selection and Security Identification — α_A α_B A_1 B_1 C_1 E N [ ] S T Q X D C n (Notes 1, 2, 3, 4, 5, 9)	b7

NOTE 1: Device selection is restricted to the printer at this time.

NOTE 2: The character code for ENQ is a programmable character. (See Option 159.m.)

NOTE 3: The [ ] represents Ready to Receive (ACKØ)/Not Ready to Receive (NAK) replies from the ROP terminal. An ACKØ reply is required for the sequence to continue.

NOTE 4: The sequence starting with STX (optionally SOH) is sent as the initial characters of the first block of a message.

NOTE 5: DC_n must be programmed using Option 159.f. The use of Option 159.g. to program DC_n is reserved for future applications and may be left unprogrammed; however, if Option 159.g. is programmed (due to system compatibility), the terminal on receiving a selection sequence containing the character programmed by Option 159.g. will respond with an EOT. If the selection sequence fails to include DC_n, the terminal will assume that the printer is being addressed. Normally the characters encoded for DC_n are chosen from the DC_1 through DC_4 category.

NOTE 6: The α_1 α_2 are programmed using Options 159.a. and 159.b. They represent the station identity. Normally Option 159.b. is programmed identical to Option 159.a.

Diode left in.
Diode cut and removed.
* Factory installed.

A. GENERAL (Cont)

1. DESCRIPTION (Cont)

410734 Diode Matrix Circuit Card (Cont)

NOTE 7: The α in Option 171.c. is the station identity and is programmed using Option 159.a. The # is the device select character and is programmed using Option 159.b. The use of Options 159.c. or 159.d. is reserved for future applications and may be left unprogrammed; however, if Option 159.c. or 159.d. are programmed (due to system compatibility) the terminal on receiving a selection sequence containing the characters programmed by Option 159.c. or 159.d. will respond with a NAK (for 159.c.) or an EOT (for 159.d.).

NOTE 8: # must be programmed using Option 159.f. The use of Option 159.g. to program # is reserved for future applications and may be left unprogrammed; however, if Option 159.g., is programmed for system compatibility, the terminal on receiving a selection sequence containing the character programmed by Option 159.g. will respond with a NAK.

NOTE 9: α A α B A_1 B_1 C_1 are the LCU station identification characters and are not checked. The reply is α 1 α 2 A_2 B_2 C_2 followed by ACKØ or NAK. α 1 α 2 A_2 B_2 C_2 are part of [ ]. (See Note 3.) α1 α 2 in the reply identifies the ROP terminal. A_2 B_2 C_2 represents a security identification sequence encoded by Options 159.c., 159.d., and 159.e. See Note 6 for programming of α 1 α 2.

NOTE 10: α A α B are the LCU station identification and are not checked. The reply is α1 α 2 followed by the terminal status. α 1 α 2 are part of [ ] (See Note 2). See Note 6 for programming of α1 α 2.

NOTE 11: ACKØ reply is preceded by α 1 α 2. α 1 α 2 are part of [ ] (See Note 2.) The α1 α 2 in the reply identifies the ROP terminal. See Note 6 for programming of α1 α 2.

172.	Future Use	R46, b7	
a.	All Present Applications	▭	*
b.	Possible Future Use	⊠	

173.	ETB	R47, b0	
a.	Block Terminator	▭	*
b.	Block Terminator, Executes Printing a Line, Executes Vertical Tab ESC Sequence (or NL if None) or Terminates a Horizontal Tab Setting Sequence.	⊠	

174.	ETX	R47, b1	
a.	Block Terminator or Terminates Horizontal Tab Setting Sequence	▭	*
b.	Block Terminator, Terminates Horizontal Tab Sequence, Executes Printing a Line or Executes Vertical Tab ESC Sequence (or NL if None).	⊠	

▭ Diode left in.
⊠ Diode cut and removed.
* Factory installed.

175.	ITB	R47, b2	
a.	Intermediate Block Terminator	▭	*
b.	Block Terminator, Executes Printing a Line, Executes Vertical Tab ESC Sequence (or NL if None) or Terminates Horizontal Tab Setting Sequence.	⊠	

176.	LINE FEED/NEW LINE	R47, b3	
a.	Executes Printing a Line, Executes Vertical Tab ESC Sequence (or NL if None) or Terminates Horizontal Tab Setting Sequence.	▭	*
b.	SPACE Only	⊠	

177.	RS or IRS (EBCDIC)	R47, b4	
a.	Executes Printing a Line and Executes Vertical Tab ESC Sequence (or NL if None)	▭	*
b.	SPACE Only	⊠	

178.	Immediate WACK	R47, b5	
a.	Disabled	▭	*
b.	Enabled	⊠	

179.	WACK/Buffer Control	R48, b6	
a.	Enabled, Multiple Block Buffer	▭	*
b.	Disabled, Single Block Buffer	⊠	

180.	Future Use	R47, b7	
a.	All Present Applications	▭	*
b.	Possible Future Use	⊠	

181.	Future Use	R48, b0	
a.	All Present Applications	▭	*
b.	Possible Future Use	⊠	

182.	Future Use	R48, b1	
a.	All Present Applications	▭	*
b.	Possible Future Use	⊠	

183.	Future Use	R48, b2	
a.	All Present Applications	▭	*
b.	Possible Future Use	⊠	

▭ Diode left in.
⊠ Diode cut and removed.
*Factory installed.

A. GENERAL (Cont)

1. DESCRIPTION (Cont)

410734 Diode Matrix Circuit Card (Cont)

184.	Future Use	R48, b3	
a.	All Present Applications	▭	*
b.	Possible Future Use	⊠	

185.	Future Use	R48, b4	
a.	All Present Applications	▭	*
b.	Possible Future Use	⊠	

186.	Future Use	R48, b5	
a.	All Present Applications	▭	*
b.	Possible Future Use	⊠	

187.	Future Use	R48, b6	
a.	All Present Applications	▭	*
b.	Possible Future Use	⊠	

188.	Future Use	R48, b7	
a.	All Present Applications	▭	*
b.	Possible Future Use	⊠	

▭ Diode left in.
⊠ Diode cut and removed.
* Factory installed.

410733 Controller Circuit Card

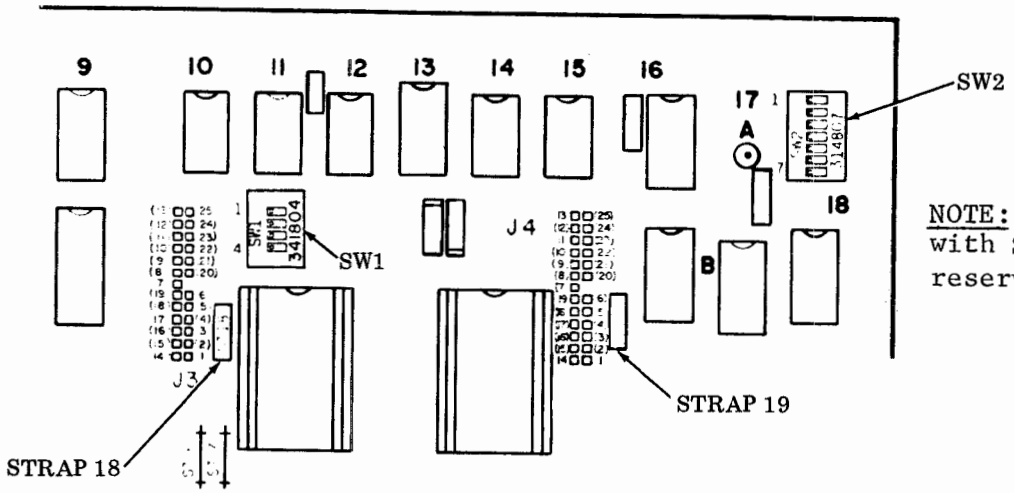

NOTE: SW2 along with SW3 and SW4 are reserved for future use.

189.	Receiver Clock Control	SW1 1	SW1 2	SW1 3	SW1 4	
a.	Rec Clock from Associated Data Set	—	—	O	●	*
b.	Rec Clock Generated Internally	—	—	●	O	

190.	Transmitter Clock Control	SW1 1	SW1 2	SW1 3	SW1 4	
a.	Trans Clock from Associated Data Set	O	●	—	—	*
b.	Trans Clock Generated Internally	●	O	—	—	

	Ground Connection	CUT STRAP 18	CUT STRAP 19	
a.	Frame Ground Connected to Signal Ground	NO	NO	*
b.	Frame Ground Not Connected to Signal Ground	YES	YES	

NOTE: Where a longer than normal 408065 cable for connecting ROP and data set is used, and when electrical noise is a problem, the frame ground to signal ground connection may be broken at the ROP (Option b.) and tied together at another point (as at the data set).

● Indicates dot end of rocker switch depressed; toggle or slide positioned to ON.

O Indicates blank end of rocker switch depressed; toggle or slide positioned to OFF.

— Position of switch does not affect option.

*Factory installed.

A. GENERAL (Cont)

1. DESCRIPTION (Cont)

Integrated Asynchronous 40C303AD Controller Options

Options in the integrated controller are selected by setting miniature slide, toggle, or rocker switches on the 410737 circuit card or by cutting diodes on the 410734 diode matrix circuit card. The ROP controller options are listed below and numbered 101. through 191., some of which are not applicable. Options 125. and 159. through 188. are not applicable to this controller.

Activating Controller Options
410734 Diode Matrix Card

Diodes in Rows 47 and 48 are used to select the operating speed of the controller when the proper diodes are cut and removed.

101. Operating Speed	R47								R48					
	b0	b1	b2	b3	b4	b5	b6	b7	b0	b1	b2	b3	b4	b5
a. 110 baud	▭	⊗	▭	▭	⊗	▭	▭	▭	▭	▭	⊗	▭	⊗	
b. 150 baud	▭	▭	▭	▭	▭	▭	⊗	▭	⊗	⊗	⊗	▭	⊗	
c. 300 baud	▭	▭	▭	▭	▭	⊗	▭	⊗	⊗	⊗	▭	⊗	⊗	
d. 600 baud	▭	▭	▭	▭	⊗	▭	⊗	⊗	⊗	▭	⊗	⊗	⊗	
e. 1050 baud	▭	▭	▭	▭	▭	▭	⊗	⊗	▭	⊗	⊗	⊗	⊗	
f. 1200 baud	▭	▭	▭	⊗	▭	⊗	⊗	⊗	▭	⊗	⊗	⊗	⊗	
g. 1800 baud	⊗	▭	⊗	▭	▭	▭	⊗	▭	⊗	⊗	⊗	⊗	⊗	
h. 2100 baud	▭	▭	▭	▭	▭	⊗	⊗	▭	⊗	⊗	⊗	⊗	⊗	
i. 2400 baud	▭	▭	⊗	▭	⊗	⊗	⊗	▭	⊗	⊗	⊗	⊗	⊗	
j. 3000 baud	▭	▭	▭	▭	⊗	▭	▭	⊗	⊗	⊗	⊗	⊗	⊗	
k. 3600 baud	▭	⊗	▭	▭	▭	⊗	▭	⊗	⊗	⊗	⊗	⊗	⊗	
l. 4800 baud	▭	⊗	▭	⊗	⊗	⊗	▭	⊗	⊗	⊗	⊗	⊗	⊗	
m. External Clock	▭	▭	▭	▭	▭	▭	▭	▭	▭	▭	▭	▭	▭	

▭ Diode left in.
⊗ Diode cut and removed.
*Options marked with an asterisk are factory furnished.

NOTE: Options 102. through 118. and Option 153. apply to multipoint private line operation only (Option 141.b. must be selected); for switched network operation skip to Option 119. (Option 141.a. must be selected). Options 121. through 152. and 154. through 158. apply to all types of operation. Refer to diode matrix card 410734 for location of diodes for all options from 102. through 155.

410734 Diode Matrix Circuit Card

102.	Variable Characters For Multipoint Private Line Operation		Diode Assignment Row	Column
a.	CDC No. 1, Character 1		R1,	b0-b6
b.	CDC No. 1, Character 2		R2,	b0-b6
c.	CDC No. 2, Character 1	If not used,	R3,	b0-b6
d.	CDC No. 2, Character 2	select as	R4,	b0-b6
e.	CDC No. 3, Character 1	CDC No. 1.	R5,	b0-b6
f.	CDC No. 3, Character 2	If not used,	R6,	b0-b6
g.	Answer-Back 1, Character 1 (R1)	select same	R7,	b0-b6
h.	Answer-Back 1, Character 2 (R2)	as CDC No. 2.	R8,	b0-b6
i.	Answer-Back 2 (R3)		R9,	b0-b6
j.	Answer-Back 3 (R4)		R10,	b0-b6
k.	Interrupt		R11,	b0-b6
l.	Start of Heading/Start of Text 1		R12,	b0-b6
m.	Start of Heading/Start of Text 2		R13,	b0-b6
n.	End of Transmission (in addition to EOT or DLE EOT)		R14,	b0-b6

REMINDER: Leave diodes in place (▭) for spacing or 0 bits. Cut and remove (⊠) diodes for marking or 1 bits.

(Part of 410734 Diode Matrix Circuit Card)

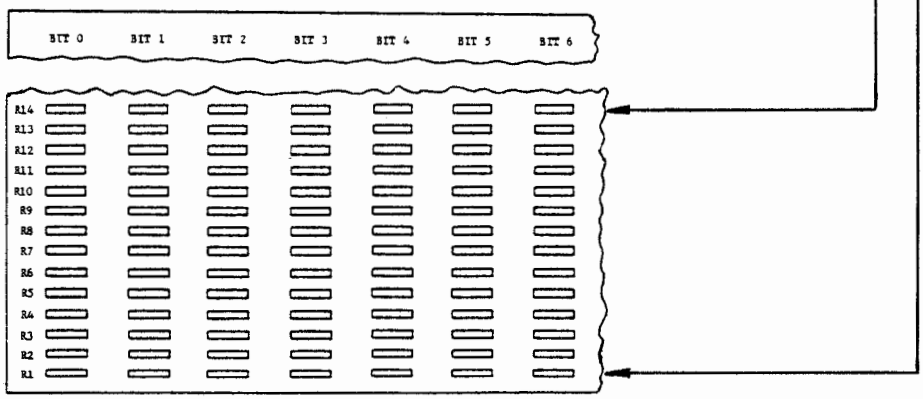

NOTE 1: Select a character for each position. Code only the first seven levels of ASCII (no parity bit). If Option 124.b. is chosen, cut R14 bit 7 diode.

NOTE 2: If CDC No. 2 is not used, code same as CDC No. 1.

NOTE 3: If CDC No. 3 is not used, code same as CDC No. 2.

103.	No. of Characters in CDC No. 1	R15, b0	
a.	One Character CDC	▭	*
b.	Two Character CDC	⊠	

▭ Diode left in.
⊠ Diode cut and removed.
*Factory installed.

A. GENERAL (Cont)

1. DESCRIPTION (Cont)

410734 Diode Matrix Circuit Card (Cont)

NOTE 1: A one character CDC No. 1 should have Options 102.a. and b. coded the same.

NOTE 2: If DELETE is used after a CDC, it is not counted in the number of characters selected in this and the following two options (103. through 105.); instead DELETE is enabled by Options 106. through 108.

104.	No. of Characters in CDC No. 2	R15,b1	
a.	One Character CDC	▭	*
b.	Two Character CDC	▭✕	

NOTE: A one character CDC No. 2 should have Options 102.c. and 102.d. coded the same.

105.	No. of Characters in CDC No. 3	R15,b2	
a.	One Character CDC	▭	*
b.	Two Character CDC	▭✕	

NOTE: A one character CDC No. 3 should have Options 102.c. and f. coded the same.

106.	DELETE Must Follow CDC No. 1	R15,b3	
a.	No	▭	*
b.	Yes	▭✕	

107.	DELETE Must Follow CDC No. 2	R15,b4	
a.	No	▭	*
b.	Yes	▭✕	

108.	DELETE Must Follow CDC No. 3	R15,b5	
a.	No	▭	*
b.	Yes	▭✕	

109.	Answer-Back Generated for CDC No. 2	R15,b6	
a.	Answer-Back to CDC No. 2	▭	*
b.	No Answer-Back to CDC No. 2	▭✕	

110.	Answer-Back Generated for CDC No. 3	R15,b7	
a.	Answer-Back to CDC No. 3	▭	*
b.	No Answer-Back to CDC No. 3	▭✕	

▭ Diode left in.
▭✕ Diode cut and removed.
*Factory installed.

111.	Printer-Controlled Answer-Back	R16,b0	
a.	All Answer-Backs Delayed by Time of Option 118. (118.a. -- No Delay 118.b. -- Approximately 180 Milliseconds).	▭	*
b.	Answer-Back 1 Delayed Until Printer Ready to Accept a Character or by Time of Option 118. (Whichever is Longer). Answer-Backs 2 and 3 Delayed by Time of Option 118. If Printer is not Ready to Accept a Character after Two Seconds, Answer-Back 2 is sent.	⊠	

NOTE: Option 111.b. requires that Option 140.a. be selected.

112.	Form Feed on Deselect	R16,b1	
a.	No Form Feed on Deselect	▭	*
b.	FF Character Sent to Printer	⊠	

113.	Loss of Ability to Receive Causes Deselect	R16,b2	
a.	Loss of Ability to Receive Does Not Cause Deselect	▭	*
b.	Loss of Ability to Receive Causes Deselect	⊠	

NOTE: If 113.b. is selected, 146.b. must be selected.

114.	Line Break on Loss of DTR	R16,b3	
a.	Loss of DTR Does Not Cause Line Break	▭	*
b.	Loss of DTR Does Cause Line Break	⊠	

NOTE: If Option 113.b. has been enabled, then Option 114.b. is not functional.

115.	Line Break on Vertical Parity Error	R16,b4	
a.	Vertical Parity Error Does Not Cause Line Break	▭	*
b.	Vertical Parity Error Does Cause Line Break	⊠	

116.	Copy Before STX	R16,b5	
a.	Copy after STX	▭	*
b.	Copy After Receiving Valid CDC if Ready to Receive (Before STX).	⊠	

117.	Number of Characters in Answer-Backs	R16,b6	
a.	Answer-Back Consists of 1 Character	▭	*
b.	Answer-Back Consists of 2 Characters	⊠	

118.	Answer-Back Response Delay	R16,b7	
a.	No Delay After Clear to Send (CB) ON From Data Set	▭	*
b.	Fixed Delay of Approximately 180 Milliseconds	⊠	

▭ Diode left in.
⊠ Diode cut and removed.
*Factory installed.

A. GENERAL (Cont)

1. DESCRIPTION (Cont)

410734 Diode Matrix Circuit Card (Cont)

119.	Variable Characters for Switched Network Answer-Back	Diode Assignment		
			Column	
		Row	ASCII	Baudot
a.	Answer-Back Character 1	R1,	b0-b6	b0-b4
b.	Answer-Back Character 2	R2,	b0-b6	b0-b4
c.	Answer-Back Character 3	R3,	b0-b6	b0-b4
d.	Answer-Back Character 4	R4,	b0-b6	b0-b4
e.	Answer-Back Character 5	R5,	b0-b6	b0-b4
f.	Answer-Back Character 6	R6,	b0-b6	b0-b4
g.	Answer-Back Character 7	R7,	b0-b6	b0-b4
h.	Answer-Back Character 8	R8,	b0-b6	b0-b4
i.	Answer-Back Character 9	R9,	b0-b6	b0-b4
j.	Answer-Back Character 10	R10,	b0-b6	b0-b4
k.	Answer-Back Character 11	R11,	b0-b6	b0-b4
l.	Answer-Back Character 12	R12,	b0-b6	b0-b4
m.	Answer-Back Character 13	R13,	b0-b6	b0-b4
n.	Answer-Back Character 14	R14,	b0-b6	b0-b4
o.	Answer-Back Character 15	R15,	b0-b6	b0-b4
p.	Answer-Back Character 16	R16,	b0-b6	b0-b4

REMINDER: Leave diodes in place (▭) for spacing or 0 bits. Cut and remove (⊠) diodes for marking or 1 bits.

NOTE 1: Option 119. (a. through p., as desired) requires that Option 120. (a. through p., corresponding) and 141.a. be selected.

NOTE 2: Option 119. is coded for ASCII characters (coded only the first seven levels, no parity bit, except when Option 127.b. is activation for Baudot applications).

120.	Number of Characters in Switched Network Answer-Back	Cut and Remove Diode
a.	1	R1, b7
b.	2	R2, b7
c.	3	R3, b7
d.	4	R4, b7
e.	5	R5, b7
f.	6	R6, b7
g.	7	R7, b7
h.	8	R8, b7
i.	9	R9, b7
j.	10	R10,b7
k.	11	R11,b7
l.	12	R12,b7
m.	13	R13,b7
n.	14	R14,b7
o.	15	R15,b7
p.	16	R16,b7

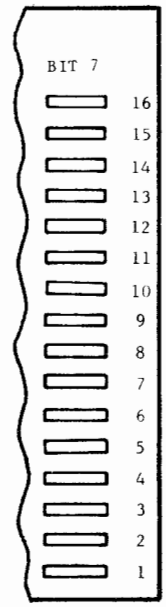

▭ Diode left in.
⊠ Diode cut and removed.
*Factory installed.

NOTE 1: One number must be selected if answer-back characters are coded in Option 119. If one is not cut, then length of answer-back will be extended into horizontal tab area and then vertical tab area until a b7 diode is found out.

NOTE 2: Cut and remove the b7 diode in the row corresponding to the LAST answer-back character selected in Option 119. For example, if Option 119.a. through h. has been selected, select only Option 120.h.

NOTE 3: Option 120. is applicable to both ASCII and Baudot optioning of Option 119.

121.	Left Margin Setting	R17, b1 to R18, b7
a.	Left Margin at Column 1	▭ *
b.	Left Margin at Column 2 or beyond	⊠ Table D

NOTE 1: Diode R17, b0 is NOT cut for Option 121.a. or b. Cut and remove (⊠)only the diode corresponding to the desired left margin position (printer column) as listed in Table D. If the printer left margin is required to be at column 17 or beyond, refer to the table for Option 122. for the diode location. See Note 1 above for exception.

NOTE 2: Specify left margin setting required by column number. This option affected by 131. To obtain this setting, cut one as follows: (See Table D.)

122.	Horizontal Tabulation Settings	R17, b1 to R33, b3
a.	No Horizontal Tab Settings (See Note.)	▭ (ALL) *
b.	Preselected Horizontal Tab Settings in Any Column Through 80 (80-Column Printer) or Through 132 (132-Column Printer) (See Note.)	⊠ Table E

NOTE: Diode R17, b0 is NOT cut for Option 122.a. or b.

When selecting horizontal tab settings for a particular customer application, remember that the printer spaces, prints, and tabs at 10 character/columns per inch.

Horizontal tab settings to the left of, or the same as the left margin setting of Option 121.b. should, obviously, be avoided. Cutting and removing a lower numbered diode than chosen for the left margin setting will result in a new left margin at a lower numbered column and the left margin established by Option 121.b. will become a horizontal tab stop. Similarly, horizontal tab selecting beyond 80 columns must be avoided for 80-column printers.

Option 122.b. requires that 80-column printers be optioned with Option 17.c. (right margin at 80th column) and 132-column printers be optioned with Option 17.e. (right margin at 132nd column).

Cut and remove (⊠) the diode(s) corresponding to the desired horizontal tab setting(s), as shown in Table E. Also cut and remove the diode representing the last printing column of the printer.

▭ Diode left in.
⊠ Diode cut and removed.
*Factory installed.

A. GENERAL (Cont)

1. DESCRIPTION (Cont)

410734 Diode Matrix Circuit Card (Cont)

123.	Vertical Tabulation Settings	R34,b1 to R42,b7
a.	No Vertical Tab Settings	▭ (ALL) *
b.	Preprogrammed Tab Settings of From 2-72 Lines	⊠ Table F

NOTE 1: When selecting vertical tab settings for a particular customer application, remember that the printer line feeds and tabs vertically at 6 lines per inch or 8 lines per inch. Also, Option 20.b. (double line feed) will, if selected, cause the vertical tab settings to be double the length shown in Table F.

NOTE 2: If a message vertical tabs past the last tab stop and the printer is set for forms, the next form will come into registration.

124.	Receipt of ENQ Starts Switched Network Answer-Back/Multipoint Private Line Diagnostic Test	R43,b0
a.	ENQ Does Not Start Answer-Back/Test	▭ *
b.	ENQ Starts Answer-Back Test	⊠

NOTE: See Note under Option 102. See Note under Option 143. if 124.b. is enabled.

125. Not applicable to this controller.

126.	Pulse or Tone Generated on Receipt of BEL	R43,b2
a.	Received BEL Character Does Not Cause Pulse or Tone	▭ *
b.	Received BEL Character (ASCII or -- Option 127.b., 138.b., or 139.b. Selected -- Baudot or Teletypesetter Code Number 1 or 2) Causes 1-Second Pulse or Tone Generation	⊠

NOTE: Pulse generation on paper out or internal alarm is always provided (not an option). Option 126. controls pulse generation only. ROP terminals use an opcon 40K003 that has an audible alarm. Consecutive BEL characters must be received more than one second apart for more than one tone to be heard.

127.	Baudot Code Converted to ASCII	R43,b3
a.	Baudot Code Not Accepted	▭ *
b.	Baudot Code Converted to ASCII for Printer	⊠

NOTE: If an answer-back is desired, it must be coded in Baudot using diodes C1-C16, bits 0 through 4. Leave the bit 5 and bit 6 diodes closed and code the bit 7 diodes per Option 120. The answer-back will then be sent on-line in Baudot code but printed by the ROP (if Option 145.b. is selected) in ASCII. Type carriers for fractions and weather for Baudot are not available.

▭ Diode left in.
⊠ Diode cut and removed.
*Factory installed.

128.	Shift In/Shift Out (SI/SO) Detection	R43,b4	
a.	SI/SO Detection Not Used	▭	*
b.	SI/SO Detection Enables Printing Additional Characters	⊠	

129.	Horizontal Tabulation	R43,b5	
a.	HT Character Ignored by ROP	▭	*
b.	HT Character Causes Horizontal Tab as Programmed in Option 122. or Set On-Line	⊠	

NOTE: Option 129.b. requires that Option 17.c. or e. be activated. Individual tab stops are set on-line upon receipt of ESC 1 (one tab per each received ESC 1). ESC 2 clears all tabs at the point and to the right of the point entered, up to the end of line. On-line tab selection overrides the fixed optioning of Option 122.b. A disconnect, or deselect (delayed up to one minute), clears all on-line tab stops and restores any preselected tab stops.

130.	Vertical Tabulation	R43,b6	
a.	VT Character Causes Line Feed	▭	*
b.	VT Character Causes Vertical Tab as Programmed in Option 123. or Set On-Line	⊠	

NOTE: Individual tab stops are set on-line upon receipt of ESC 5 (one tab per each received ESC 5). ESC 6 clears all tabs at the point and below the point entered, up to the end of the tab stops. On-line tab selection overrides the fixed optioning of Option 123.b. A disconnect, or deselect (delayed up to one minute), clears all on-line tab stops and restores any preselected tab stops.

131.	Left Margin	R43,b7	
a.	Left Margin begins at Column 1 regardless of Programming of Options 121. and 122.	▭	*
b.	Left Margin begins as Programmed in Option 121.	⊠	

NOTE: Option b. requires Option 17.c. or e. be activated.

132.	Printing of Escape Sequences	R44,b0	
a.	Character after ESC Printed as Received	▭	*
b.	Printing of Character after ESC Suppressed	⊠	

NOTE: With Option 132.b. activated, the character after ESC will be suppressed only if ESC is preceded by a non-ESC character. For example, if ESC ESC X is received, X will be printed.

133.	DLE EOT/EOT Disconnect	R44,b1	
a.	DLE EOT Sequence causes Disconnect or Deselect (No Disconnect or Deselect on EOT alone)	▭	*
b.	EOT causes Disconnect or Deselect	⊠	

NOTE: Either of the above in conjunction with Option 141.a. causes a disconnect provided Option 140.a. is activated. Either of the above in conjunction with Option 141.b. causes a deselect.

▭ Diode left in.
⊠ Diode cut and removed.
*Factory installed.

A. GENERAL (Cont)

1. DESCRIPTION (Cont)

410734 Diode Matrix Circuit Card (Cont)

134.	On-Line Printer Control	R44,b2	
a.	DC2 and DC4 Ignored by ROP	▭	*
b.	DC4 Blinds Printer, DC2 Unblinds Printer	⊠	

135.	Idle Line Disconnect	R44,b3	
a.	No Disconnect on Idle Line	▭	*
b.	Disconnect After Idle Line of Approximately 30 Seconds	⊠	

NOTE: Option b. requires that Option 140.a. be activated after the timeout of Option 148.a. (minimum motor turn off delay) has occurred due to an idle line, this option is checked. If b. is selected, a disconnect will occur as for Option 135.

136.	Normal/Inverted SI/SO	R44,b4	
a.	Normal SI = ASCII	▭	*
b.	Inverted SO = ASCII	⊠	

NOTE: Option 136.b. inverts Option 128.b.

137.	Carrier Fail Disconnect	R44,b5	
a.	No Disconnect on Carrier Fail	▭	*
b.	Disconnect after No Carrier for Approximately 15 Seconds	⊠	

NOTE: Option b. requires that Options 140.a. and 144.a. be activated.

138.	Teletypesetter Code Number 1 Converted to ASCII	R44,b6	
a.	Teletypesetter Code Number 1 Not Accepted	▭	*
b.	Teletypesetter Code Number 1 Converted to ASCII for Printer	⊠	

NOTE: Teletypesetter Code Number 1 is defined as Teletypesetter code with the bits transmitted in the sequence 0 1 2 3 4 5 (normally used for high speed transmission). Appropriate type carrier is required.

139.	Teletypesetter Code Number 2 Converted to ASCII	R44,b7	
a.	Teletypesetter Code Number 2 Not Accepted	▭	*
b.	Teletypesetter Code Number 2 Converted to ASCII for Printer	⊠	

NOTE: Teletypesetter Code Number 2 is defined as Teletypesetter code with the bits transmitted in the sequence 1 2 3 4 5 0 (normally used for low speed transmission). Appropriate type carrier is required.

▭ Diode left in.
⊠ Diode cut and removed.
*Factory installed.

140.	Interface to Transmission Facilities	R45, b0	
a.	EIA	▭	*
b.	20 mA	⊠	

NOTE: Option 140.b. disables Options 111.b., 118.b., 135.b., and 137.b., all of which are related to the EIA "hand shaking" routine between the ROP and the data set.

141.	Data Link Control Procedures	R45,b1	
a.	Switched Network and Point-to-Point Private Line Applications	▭	*
b.	Multipoint Private Line Applications	⊠	

142.	Automatic Answer Starts Switched Network Answer-Back	R45,b2	
a.	Auto Answer does not start Answer-Back	▭	*
b.	Auto Answer starts Answer-Back	⊠	

NOTE: If Option 142.b. is enabled, it is recommended that Option 135.b. or 137.b. also be enabled to prevent possible system delays after aborted calls. Option 142.b. requires that Options 140.a. and 151.a. be activated.

143.	Reverse Channel Used/Not Used	R45,b3	
a.	Reverse Channel Not Used -- Minimum 400 milliseconds of Line Break Generated to Stop Sender	▭	*
b.	Reverse Channel Send and Receive (SCA and SCF) Used -- SCA Turned OFF to Stop Sender, SCF ON Required to Send Answer-Back	⊠	

NOTE: The choice of a. or b. depends on the type of data link control procedures and data set used. The following conditions will cause the controller to stop the sender: (1) buffer 75% full indication (generates continuous line break or SCA off until down to 25%) and (2) manually depressing the INTRPT key on the key strip (generates continuous SCA off or 400 millisecond break).

If 143.b. is enabled and the controller is used in a system that does not provide reverse channel signals (such as 8A1 selective calling systems) then the answer-back/diagnostic test provided by Option 124.b. will not be able to function.

144.	Monitor Receive Data on Data Carrier Detect (CF) or Data Set Ready (CC)	R45,b4	
a.	Monitor Receive Data on Recognition of CC and CF ON	▭	*
b.	Monitor Receive Data on Recognition of CC ON	⊠	

NOTE: The choice of a. or b. depends on the type of data set used. B. is required for the 113A-type data set but is undesirable for all other present data sets usable with integrated ROP sets. If the selected control signal is OFF, all incoming data signals are ignored.

145.	Local Copy of Switched Answer-Back	R45,b5	
a.	No Local Copy of Answer-Back	▭	*
b.	Local Copy of Answer-Back	⊠	

NOTE: Option 145.b. cannot be used with Data Set 202C; local copy is obtained with 145.a.

▭ Diode left in.
⊠ Diode cut and removed.
* Factory installed.

A. GENERAL (Cont)

1. DESCRIPTION (Cont)

410734 Diode Matrix Circuit Card .(Cont)

146.	Friction Feed/Tractor Feed Printer	R45,b6	
a.	Friction Feed Printer -- Paper Alarm causes AB2 to be sent on next CDC or Data Terminal Ready (CD) OFF on New Call	▭	*
b.	Tractor Feed Printer -- Paper Alarm causes Immediate Deselect or Call Disconnect (See Options 113. and 114.)	⊠	

NOTE: Tractor Feed Printer and Option 146.b. plus Options 39.a. and 48.b. are the same as item 5 except that the controller will drop DTR as soon as the printer indicates out of paper.

147.	Buffer Fully Enabled/Minimum Usage of Buffer	R45,b7	
a.	Buffer Fully Enabled -- Data Flow to Printer Controlled by Printer to avoid Data Stacking	▭	*
b.	Minimum Usage of Buffer -- Data Sent to Printer at approximately same rate as received.	⊠	

NOTE: B. requires that the data be properly formatted to avoid data stacking and possible loss of characters, as for sets controlled by a 40C103AE Controller.

148.	Motor Turn-Off Delay	R46,b0	
a.	Minimum Delay -- Motor Turns Off approximately 30 seconds after Detection of Idle State	▭	*
b.	Maximum Delay -- Motor Turn Off delayed approximately 2 minutes after Detection of Idle Line.	⊠	

NOTE: After 30 seconds of idle line time and with Option 135.b. activated, a disconnect or deselect as stated in Option 133. takes place. At this time, and with Option 148.a. activated, the motor is turned off. With Option 148.b. activated, motor turn off is delayed an additional 2 minutes. In switched network applications, the motor will turn off immediately upon detection of the disconnect sequence (DLE EOT or EOT) if 148.a. is selected; if 148.b. is selected, the 2 minute delay is enabled.

149.	New Line Substitution on Carriage Return	R46,b1	
a.	Carriage Return Passed to Printer	▭	*
b.	New Line Substituted for Carriage Return	⊠	

150.	DATA ERROR Lamp Used/Not Used	R46,b2	
a.	DATA ERROR Lamp Lighted on Parity Error	▭	*
b.	DATA ERROR Lamp Not Used to Indicate Parity Errors.	⊠	

▭ Diode left in.
⊠ Diode cut and removed.
*Factory installed.

151.	Switched Network/Private Applications	R46,b3	
a.	Switched Network Applications -- Data Set Ready (CC) ON Turns on Motor	▭	*
b.	Private Line Applications -- Character in Buffer Turns on Motor	⊠	

152.	Errored Character/Substitute Character to Printer on Parity Error	R46,b4	
a.	Errored Character Sent to Printer	▭	*
b.	Substitute Character Type Carrier Symbol on Monocase Without Foldover or (~) on Up-Low Printers Without Foldover is sent to Printer on Parity Error.	⊠	

NOTE: An up-low type carrier will print a tilde (~) if printer Option 21.a. is selected and a carat (^) if printer Option 21.b. is selected. A monocase type carrier will print a type carrier symbol if Option 22.a. is selected and a carat (^) if printer Option 22.b. is selected.

153.	Answer-Back 3 Use	R46, b5	
a.	Answer-Back 3 Not Generated	▭	*
b.	Answer-Back 3 Generated	⊠	

154.	Future Use	R46,b6	
a.	All Present Applications	▭	*
b.	Possible Future Use	⊠	

155.	Future Use	R46,b7	
a.	All Present Applications	▭	*
b.	Possible Future Use	⊠	

NOTE: Do not alter factory programming for Options 153., 154., and 155.

156.	Number of Data Bits Per Character (Excluding Parity Bit, If Used)	R33		
		b6	b7	
a.	5 Bits/Character (Baudot Code)	▭	▭	*
b.	6 Bits/Character (Teletypesetter Code)	⊠	▭	
c.	7 Bits/Character (ASCII Code With Parity)	▭	⊠	
d.	8 Bits/Character (ASCII Code Without Parity)	⊠	⊠	

157.	Number of Stop Bits Per Character	R48		
		b6	b7	
a.	1 Stop Bit	⊠	▭	*
b.	1-1/2 Stop Bits	▭	⊠	
c.	2 Stop Bits	⊠	⊠	

158.	Parity Used	R46	
		b6	b7
a.	Odd Parity Used	⊠	▭
b.	Even Parity Used	⊠	⊠
c.	No Parity Check or Parity Bit Used	▭	▭

▭ Diode left in.
⊠ Diode cut and removed.
*Factory installed.

A. GENERAL (Cont)

1. DESCRIPTION (Cont)

410734 Diode Matrix Circuit Card (Cont)

159.-188. Not applicable to this controller

191.	Line Wraparound Operation	R43,b1	
a.	Line Wraparound Performed by Printer	▭	*
b.	Line Wraparound Performed by Controller	▭✕	

NOTE: When a right-hand margin is required outside of the range provided by the printer's options, choose 191.b. and cut a diode (in Option 122.) to designate the last column to be printed. The controller will then provide a new line if data continues beyond this point.

▭ Diode left in.
▭✕ Diode cut and removed.
*Factory installed.

410737 Controller Circuit Card

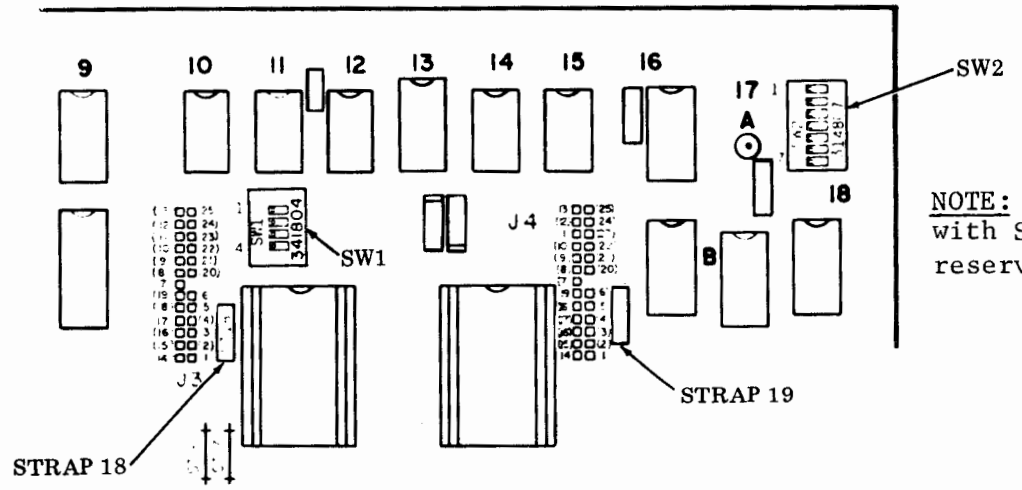

NOTE: SW2 along with SW3 and SW4 are reserved for future use.

		SW1				
189.	Receiver Clock Control	1	2	3	4	
a.	Rec Clock from Associated Data Set	—	—	○	●	*
b.	Rec Clock Generated Internally	—	—	●	○	

NOTE: 40C303AD must use 189.b.

● Indicates dot end of rocker switch depressed; toggle or slide positioned to ON.
○ Indicates blank end of rocker switch depressed; toggle or slide positioned to OFF.
— Position of switch does not affect option.
*Factory installed.

190.	Transmitter Clock Control	SW1				
		1	2	3	4	
a.	Trans Clock from Associated Data Set	○	●	—	—	*
b.	Trans Clock Generated Internally	●	○	—	—	

NOTE: 40C303AD must use 190.b.

	Ground Connection	CUT STRAP		
		18	19	
a.	Frame Ground Connected to Signal Ground	NO	NO	*
b.	Frame Ground Not Connected to Signal Ground	YES	YES	

NOTE: Where a longer than normal 408065 cable for connecting ROP and data set is used, and when electrical noise is a problem, the frame ground to signal ground connection may be broken at the ROP (Option b.) and tied together at another point (as at the data set).

● Indicates dot end of rocker switch depressed; toggle or slide positioned to ON.
○ Indicates blank end of rocker switch depressed; toggle or slide positioned to OFF.
— Position of switch does not affect option.
*Factory installed.

192.	Baud Rate Factor	R33	
		b4	b5
a.	64X Baud Rate	⊠	⊠
b.	16X Baud Rate	▭	⊠
c.	1X Baud Rate	⊠	▭

NOTE: Option 192.a. is for future applications. The use of Option 192.b. requires the use of Options 101.a. through 1., 189.b., and 190.b. The use of Option 192.c. requires the use of Options 101.m., 189.a., and 190.a.

193.	Automatic Speed Change	R48	
		b4	b5
a.	212 Type Data Set Operation	▭	▭
b.	KD-ROP Operation	⊠	⊠

▭ Diode left in.
⊠ Diode cut and removed.

A. GENERAL (Cont)

2. TOOLS

Tools required for servicing the controllers are as follows:

Description	Part No.
• Wrench Assembly, 1/4 Inch	89954
• Wrench Assembly, 5/16 Inch	89955
• Screwdriver, 1/8 Inch Blade	95368
• Screwdriver, 1/4 Inch Blade	100982
• Wrench, 3/16 Socket	125752
• Wrench, 7/16 and 3/8 Open End	125765
• Wrench, 3/16 and 1/4 Open End	129534
• Wrench, 9/16 and 3/4 Open End	129537
• Nut Driver Handle	135676
• Nut Driver Bit, 1/4 Socket	135677
• Nut Driver Bit, 5/16 Socket	135678
• Wrench, 5/16 and 3/8 Open End	152835
• Strap, Static Discharge	346392
• Modification Kit (for 40C303AA/001 testing)	407346
• Pliers, Cutting W/Insulated Handles	408071 (Klein DZ19-4C or equivalent)

Suggested tools for servicing are as follows:

Volt-Ohmmeter, capable of doing continuity checks on light cable wiring.

[redacted] Test Equipment

The following extender test cables are used for testing and troubleshooting the integrated ROP controllers.

• Extender test cable for ROP Controller-40C303AA/001	CP10.008.001.1
• Extender test cable for ROP Controller-40C303AC/003 and 40C303AD	CP10.008.002.1

Supplied by: Teletype Corporation
Custom Product Division
5555 Touhy Avenue
Skokie, Illinois 60077
Telephone No. (312) 982-2499

B. SHOP PROCEDURES

1. GENERAL

This section covers the repair shop action for Model 40 ROP controllers. Details are noted for cleaning and refinishing. Conversion and variation in the controllers are described. A complete sequence is given for packing the ROP controller.

To determine the repair required, both visual and operational checks are given. A check list or note sheet should be prepared that lists the procedures to be performed and the suspected trouble. Items to be listed are: tests required, area of troubleshooting, disassembly required, components to be replaced, and the type of repair required. This type of note sheet is convenient to keep on record for later reference.

2. CLEANING AND REFINISHING

Cleaning

CAUTION: DO NOT USE TANK OR IMMERSION TYPES OF CLEANING PROCESSES (IE, ULTRASONIC OR SOLVENT TANK).

40C103

To clean housing, hand wipe. Mineral spirits can be used on exposed metal housing.

The inside of the controller should be vacuumed or air dusted (do not exceed 20 pounds pressure).

40C303

To clean, vacuum or air dust (20 pounds pressure maximum) to remove all lint, dust, and foreign materials from the controller circuit card surfaces. It may be necessary to separate the controller cards to remove excessive accumulations between cards.

Refinishing

Since the controllers are mounted inside the cabinet and are not externally visible, refinishing is not necessary.

3. INSPECTION

Visual checks are made to maintain proper set condition and to avoid general disrepair.

- Visually inspect all card connector terminals and insulators for abnormal characteristics -- replace if necessary.
- Visually inspect all connectors, cables, and wire leads for proper termination, no pinched, shorted, broken, or disconnected wires, terminals etc, -- replace if necessary.

B. SHOP PROCEDURES (Cont)

4. CONVERSIONS AND VARIATIONS

Conversions

Converting the 40C103 ROP Controller from one terminal configuration code to another is possible by replacing circuit cards. Different configuration possibilities are indicated in Section A. It is possible to convert a 40C303AC/003 to a 40C303AD controller or 40C303AD to an AC controller by changing EPROMs. Presently, there are three 40C303 ROP integrated controller configurations; 40C303AA/001 asynchronous, 40C303AC/003 synchronous and 40C303AD asynchronous.

Example: To convert to a no buffer storage capability, a 410587 card is positioned in variable space JB.

Variations

Variations of the controllers refer to the reoptioning of the circuit cards to provide various operating characteristics. The Model 40 equipment design makes terminal reconfiguration a simple plug-in operation. See Part 10 for examples of terminal configurations. Then refer to Section A of this part (Part 7) for a description of the options available for the ROP Controllers.

Activating Procedure for 40C103 Controller Options

a. Turn off all power to the station.
b. Remove controller and locate the circuit card that contains the option to be activated. For example, see below.
c. Remove circuit card. (See Section F. DISASSEMBLY.)
d. Locate the proper option strap or screw and activate as required.
e. Return the circuit card and controller to their proper locations.
f. Turn on station power.
g. Perform a checkout of the station to verify proper operation of the option.

OPTION NO.	OPTION CONDITIONS	OPTION DEFINITION	CONDITION OF STRAP OR INSULATOR	STRAP OR SCREW INSULATOR DESIGNATION
5.				
a.				*
b.				

Option Example -- Option 25

NOTE: May be in either position depending upon issue of card.

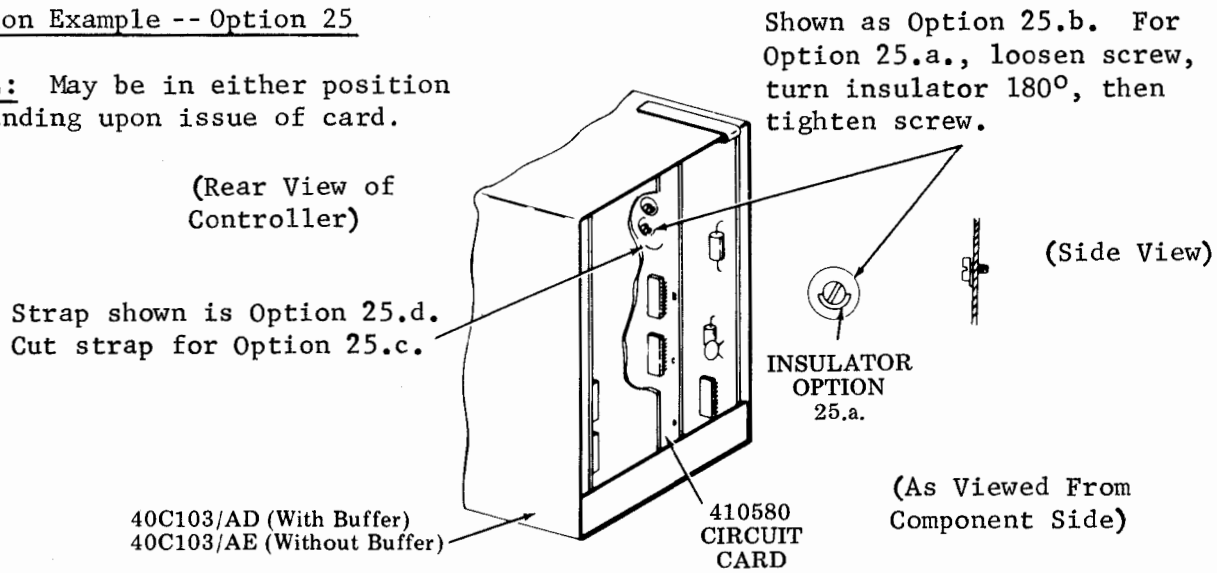

Option 25.a. or b. -- Generates odd parity null, on parity error, or does not change character. These options are located on the 410580 circuit card in the ROP Controller (40C103/--).

Option 25.c. or d. -- Data error lamp enabled or disabled. The strap to change this option is located near the rear end of 410580 circuit card and can be checked or cut without disassembly. To replace strap, it may be necessary to disassemble ROP Controller.

Activating Procedure for 40C303AA/001 Asynchronous Controller Options

a. Turn off power to the station.
b. Locate the 410141 diode matrix card for the options to be activated.
c. Remove 410141 diode matrix circuit card.(See Section F -- Disassembly.)
d. Locate and remove the proper diode(s) as required by cutting both diode leads. (See example below.)
e. Return the diode matrix card to its proper location.
f. Options are activated on the 410140 variable bit timer card and the 410727 controller card by depressing the dot end to the ON position and the blank end to the OFF position.

NOTE: It is not necessary to remove the 410140 or the 410727 circuit card to activate the option switches.

g. Cabinet options are activated through the 407077 EIA signal input assembly plug P4. Option strap is located on 407304 cable (early design) or 407323 (late design). See Section A -- ACTIVATING CABINET OPTIONS.
h. Replace controller and printer.
i. Turn on station power.
j. Perform a checkout of the station to verify proper operation of the option.

B. SHOP PROCEDURES (Cont)

4. CONVERSIONS AND VARIATIONS (Cont)

Activating Procedure for 40C303AA/001 Asynchronous Controller Options (Cont)

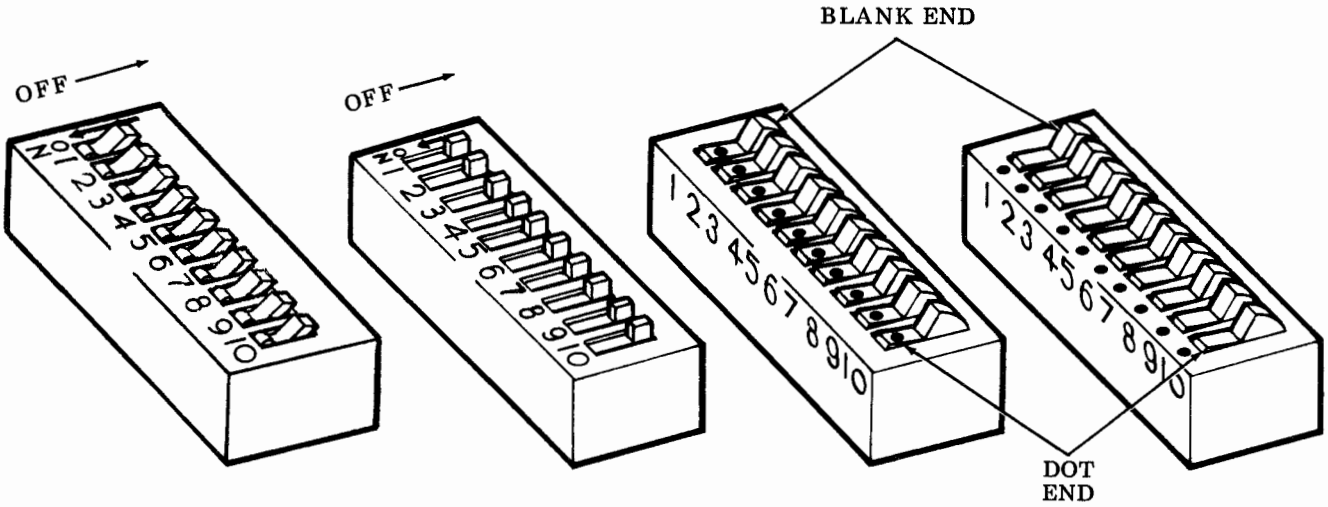

Toggle Style | Slide Style | Rocker Styles

(Toggles and Slides Shown in OFF Position, Option Deactivated)

(Rockers Shown in ON Position, Option Activated)

Typical Option Switches Used on Circuit Cards in 40C303 Controllers

OPTION NO. | OPTION CONDITIONS | OPTION DEFINITION | ROCKER SWITCH NUMBERS | LOCATION OF SWITCH ON CIRCUIT CARD

		SW1							SW2							
		1	2	3	4	5	6	7	1	2	3	4	5	6	7	
a.		●	●	○	●	●	○	●	●	○	●	●	●	●	○	
b.		○	○	○	●	●	●	○	●	●	●	●	●	●	○	
c.		○	○	●	○	○	●	●	○	●	●	●	●	●	○	
d.		●	○	○	○	●	○	○	○	●	●	●	●	●	○	
e.		○	●	○	○	●	●	○	○	●	●	●	●	●	○	
f.		○	●	○	○	○	●	○	○	●	●	●	○	●	○	*

● Indicates dot end of rocker switch depressed.
○ Indicates blank end of rocker switch depressed.
— Switch position does not affect option.
* Factory programmed.

Examples of Option Selecting on 410141 Diode Matrix Circuit Card:

Example 1: Rows R1 through R16 (See illustration below.)

a. Each row of R1 through R14 (multipoint private line applications) or R1 through R16 (switched network applications) may be optioned to represent any one of the ASCII codes listed in Table A. Diodes left in place (▭) represent spacing or 0 bits; diodes removed (⊠) represent marking or 1 bits for columns b0 through b6. Column b7 diodes control options associated with the system format and must not be considered part of the ASCII codes of columns b0 through b6.
b. In the example, R1 through R7 are shown optioned for a seven character ASCII coded switched network answer-back: HERE IS -- diode R7 b7, shown removed, denotes a seven character answer-back, as described in Option 120.
c. Answer-back characters for switched network applications, rows R1 through R16, may also be optioned to represent any of the Baudot codes shown in Table C or the Teletypesetter codes shown in Table B.
d. When coding for Baudot characters, only diode columns b0 through b4 are selected. Columns b5 and b6 must remain intact. See related Option 127.
e. Similarly, when coding for Teletypesetter characters, only diode columns b0 through b5 are selected with column b6 remaining intact. Another consideration is that Teletypesetter codes may be transmitted with two different bit order arrangements. For high speed operation (Ex: 1050 wpm), the bit transmission order is 0 1 2 3 4 5 which corresponds to diode columns b0 through b5. For low speed operation (Ex: 100 wpm) the bit transmission order is 1 2 3 4 5 0. This means that diode b0 must be selected to match b1 of the Teletypesetter code. This pattern must be observed: diode b1 for code bit b2, etc, up to diode b5 for code bit b0.

WARNING: DIODES SHOULD BE MARKED (FELT TIP PEN) BEFORE CUTTING TO GUARD AGAINST MISTAKES. DIODES CUT IN ERROR CANNOT BE RESOLDERED IN PLACE -- THE DIODE MUST BE REPLACED, USING CARE NOT TO OVERHEAT WHEN SOLDERING. MAKE CERTAIN DIODE IS ORIENTED CORRECTLY, THE SAME AS THE OTHER DIODES ON THE CARD (BANDED END TOWARD IC PACKS -- RECHECK BEFORE CUTTING!

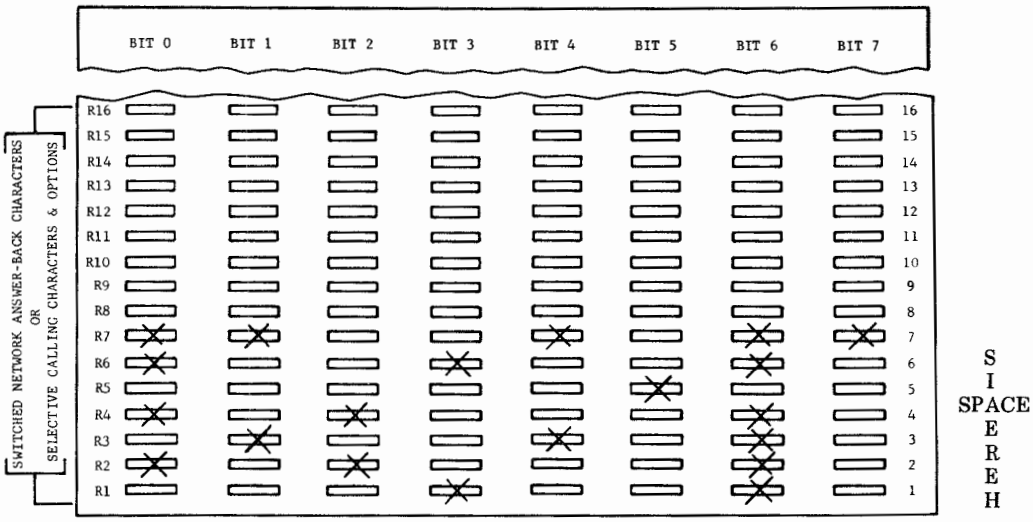

▭ Diode left in.
⊠ Diode cut and removed.
*Factory installed.

B. SHOP PROCEDURES (Cont)

4. CONVERSIONS AND VARIATIONS (Cont)

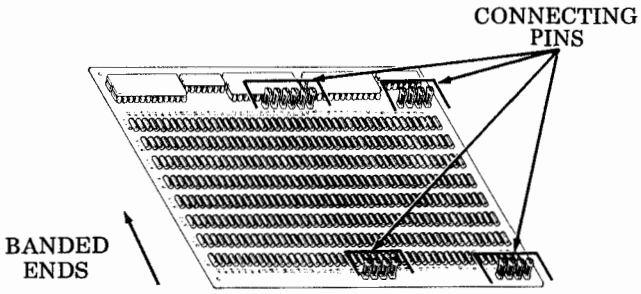

410141 Diode Matrix Circuit Card

Activating Procedure for 40C303AC/003 Synchronous and 40C303AD Asynchronous Controller Options

a. Turn off all power to the station.
b. Locate the 410734 diode matrix circuit card for the option to be activated.
c. Remove circuit card, see Section F. DISASSEMBLY.
d. Locate and remove the proper diode(s) as required by cutting both diode leads. (See examples below.)
e. Return the diode matrix card to its proper location.
f. Options are activated on the 410733 or 410737 controller circuit card by depressing the dot end to the ON position and the blank end to the OFF position.

NOTE: It is not necessary to remove the 410733 or 410737 circuit card to activate the option switch.

g. Ground connection is activated through straps 18 and 19 on the 410733 or 410737 controller circuit card. (See ground connection option.)
h. Replace controller and printer.
i. Turn on station power.
j. Perform a checkout of the station to verify proper operation of the option.

NOTE: The 410733 controller circuit card is used in the 40C303AC/003 Synchronous Controller.

The 410737 controller circuit card is used in the 40C303AD Asynchronous Controller.

Examples of Option Selecting on 410734 Diode Matrix Circuit Card

Example 1: Rows R1 through R17:

NOTE: Diodes at R17, b4, b5, b6 and b7 are not used.

a. Each diode represents one horizontal space or column on the printer, ranging from columns 1, 2 and 3 for R1, b0, b1, b2 in order to columns 130, 131 and 132 for R17, b1, b2 and b3. With all diodes in place, the printer left margin is at column 1 and no preset horizontal tab stops are provided. Cutting the appropriate diode(s) establishes a printer left margin in other than column 1 and provides tab stops for wherever desired on a line, PROVIDED Option 131 is also activated. In addition,

the diode representing the right-hand margin as selected by Option 17.c. or 17.e., must be removed. Tab stop settings to the left of the left margin, or to the right of the right margin will not be optioned.

b. The example represents diode optioning to have a 132-column tractor printer left margin at column 3, with tab stops at columns 20, 40, 60, 80, 100, and 120. See Options 17 and 131.

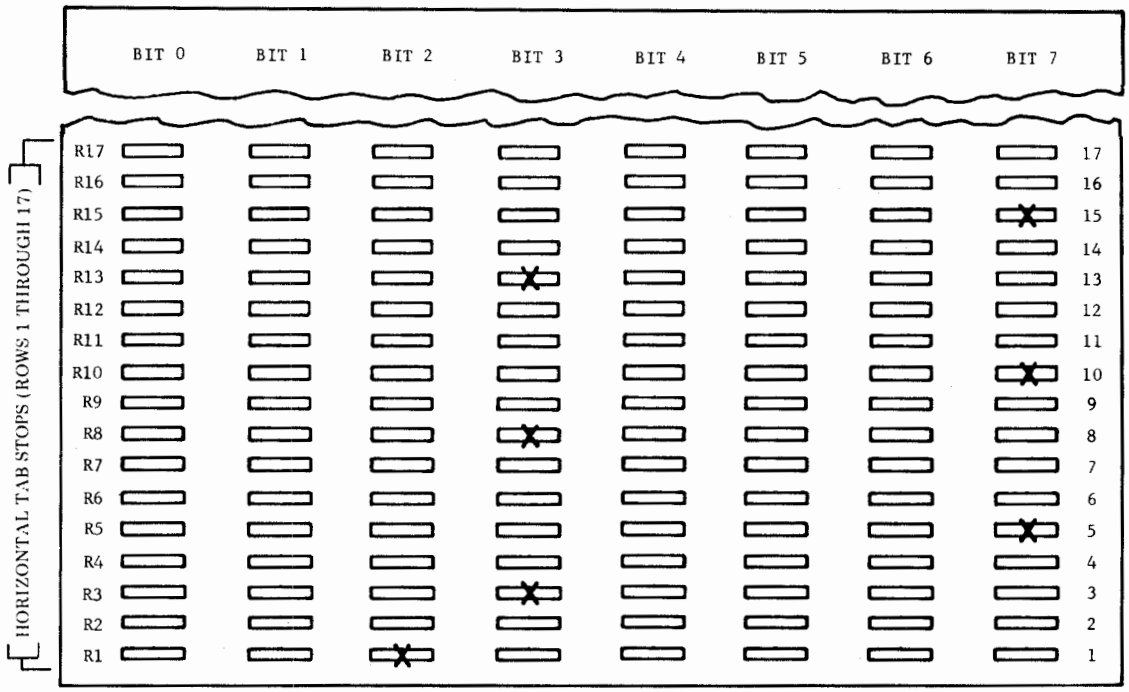

Diode left in.
Diode cut and removed.

Example of 410734 Diode Matrix Circuit Card Optioning

Example 2: Rows R18 through R29:

a. Each row of diodes represents one vertical tab stop in increasing number from Row 18 for the first tab stop to Row 29 for the twelfth tab stop. Selections must be made in increasing number. When fewer than 12 tab stops are used, the unused positions (starting with the twelfth tab stop position) must have all diodes left in.

b. The line number desired is encoded by removing diodes. The binary count of the removed diodes is added together (Bit 0 = 1, Bit 1 = 2, Bit 2 = 4, Bit 3 = 8, Bit 4 = 16, Bit 5 = 32, Bit 6 = 64 and Bit 7 = 128) to get the line count as indicated below:

For a tab stop at line 5, diodes at the Bit 0 and Bit 2 positions are removed; for a tab stop at line 26 diodes the Bit 1, Bit 3, and Bit 4 positions are removed.

WARNING: DIODES SHOULD BE MARKED (FELT TIP PEN) BEFORE CUTTING TO GUARD AGAINST MISTAKES. DIODES CUT IN ERROR CANNOT BE RESOLDERED IN PLACE -- THE DIODE MUST BE REPLACED, USING CARE NOT TO OVERHEAT WHEN SOLDERING. MAKE CERTAIN DIODE IS ORIENTED CORRECTLY, THE SAME AS THE OTHER DIODES ON THE CARD (BANDED END TOWARD IC PACKS). RECHECK BEFORE CUTTING!

B. SHOP PROCEDURES (Cont)

4. CONVERSIONS AND VARIATIONS (Cont)

Activating Procedure for 40C303AC/003 Synchronous Controller Options (Cont)

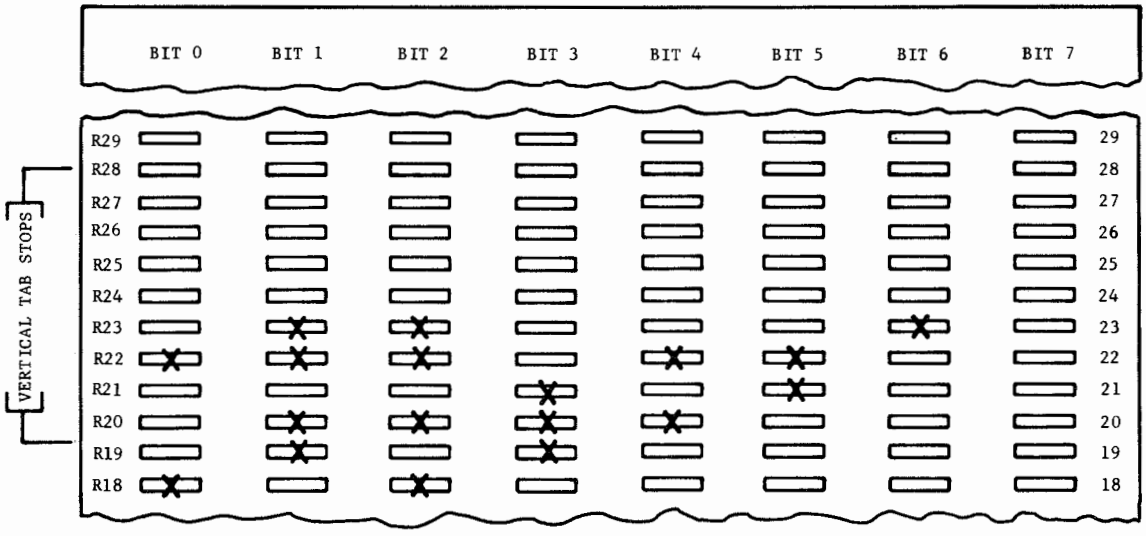

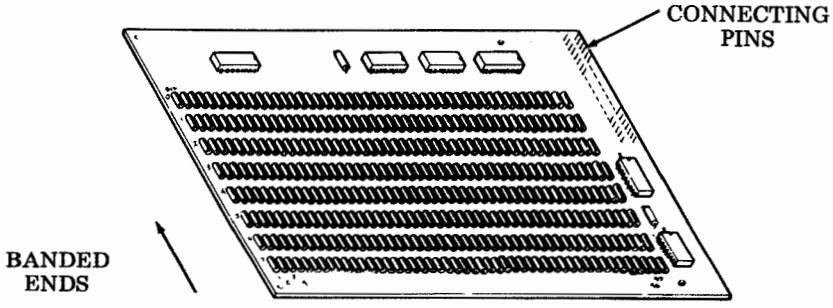

Diode left in.
Diode cut and removed.

Example 2: 410734 Diode Matrix Circuit Card

5. PACKING FOR SHIPMENT OR STORAGE -- 40C103 CONTROLLER

A repaired 40C103 Controller may be installed and shipped (or stored) in its appropriate position in the pedestal.

If the controller is to be packaged for individual shipment or storage, the following packing materials (available from Teletype Corporation) are required: 8759PK and 9136PK cartons, 21690PK corners, 23456PK bag, 28147PK and 28148PK packing details.

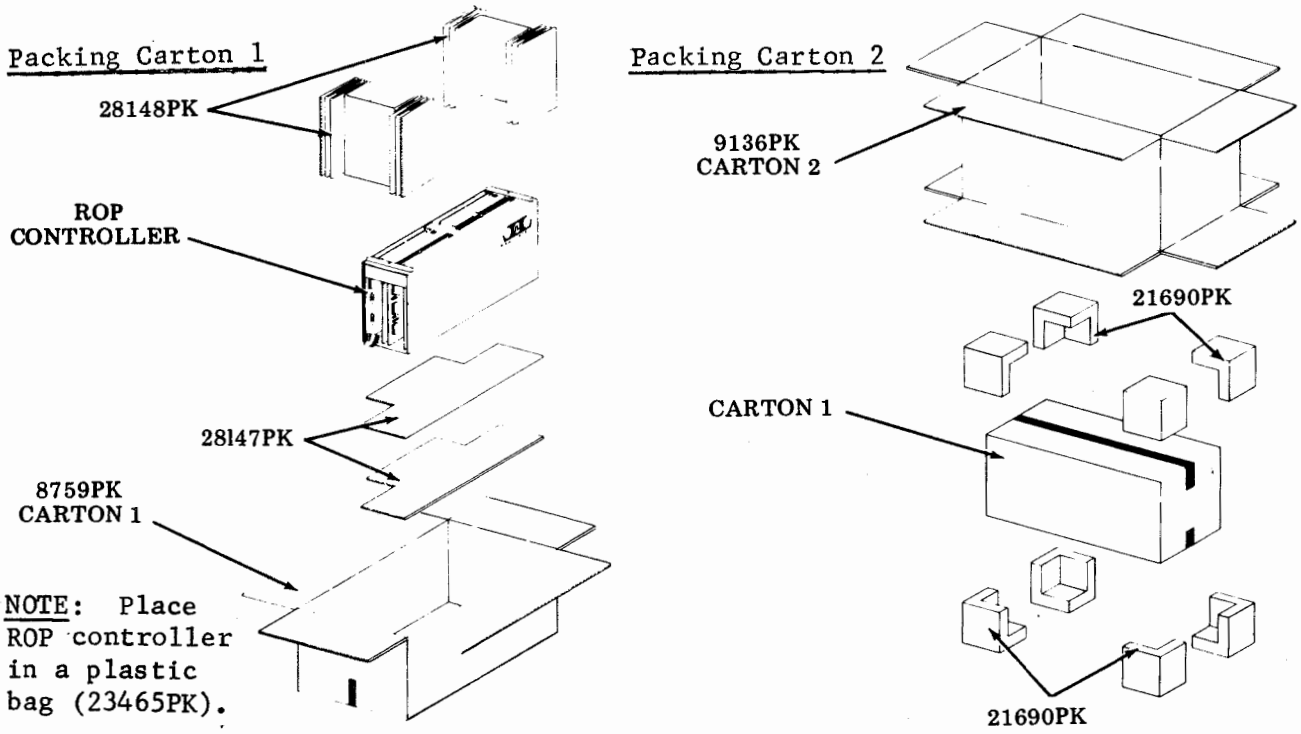

6. PACKING FOR SHIPMENT OR STORAGE -- 40C303 CONTROLLER

A repaired 40C303 Controller may be installed and shipped (or stored) in its appropriate position in the printer cabinet. If the controller is to be packaged for individual shipment or storage, the following packing materials (available from Teletype Corporation) are required:

18003PK carton with inserts, 23456PK plastic bag, 27952PK air cap, 21632 tape, and 21720PK tape.

B. SHOP PROCEDURES (Cont)

6. PACKING FOR SHIPMENT OR STORAGE -- 40C303 CONTROLLER (Cont)

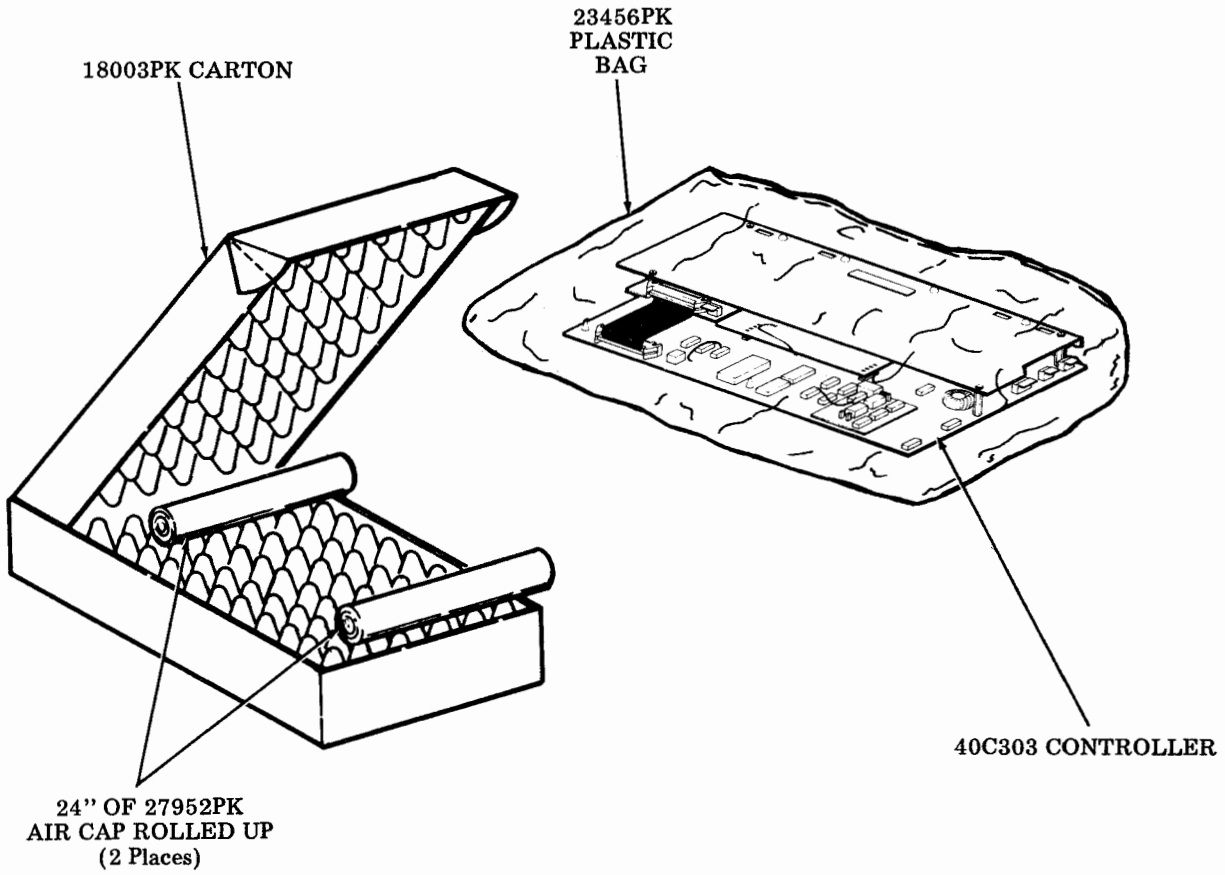

C. TESTING

1. GENERAL

An operational checkout should be performed on all repaired ROP controllers. When tested, the controller must be installed in a Model 40 ROP set of known good condition (disassembly/reassembly procedures are given in Section F).

Before starting any tests, check that all cards and cable connectors are fully seated. If a printer is present check that paper and a ribbon are installed. Turn on power switches.

Always perform the steps in the order given. A proper test result is based on all previous steps being satisfactory. If the desired response is not obtained at any step, repeat the step to make sure that the step was performed correctly.

If operational failure of the ROP Controller occurs, go directly to Section D -- TROUBLESHOOTING and perform the analysis indicated. Note that there are cases where the test results are affected by options, and an alternate result may be the cause of misoptioning.

Since the operational checkout of the ROP Controller is being performed in conjunction with a known good ROP set, failures of components other than the controller are not anticipated; however, if they should occur, references are provided to appropriate analysis procedures.

2. TEST SETS

If there is sufficient repair volume, it may be desirable to use extension cables such that the controller can be operated alongside the Model 40 set without physically installing the controller in the set. Extension facilities for the 40C303 controllers are available as indicated below.

Extender Test Set For ROP Controller -- 40C303AA/001

The CP10.008.001.1 extender test set provides access to the 40C303AA/001 Controller by extending it outside of the printer cabinet.

To install extender test set:

a. Open printer cover by depressing cover releases on both sides of the cover and lift up.
b. Remove printer.
c. Remove controller by following procedure covered in F.3 -- REMOVAL -- ROP CONTROLLER -- 40C303AA/001.
d. Slide extender test set down in printer cabinet. Tilt down and connect the associated controller connectors (SSI, OPCON, POWER, and EIA) into the extender test set.
e. Route extender test set cables outside of printer cabinet.
f. Replace printer.

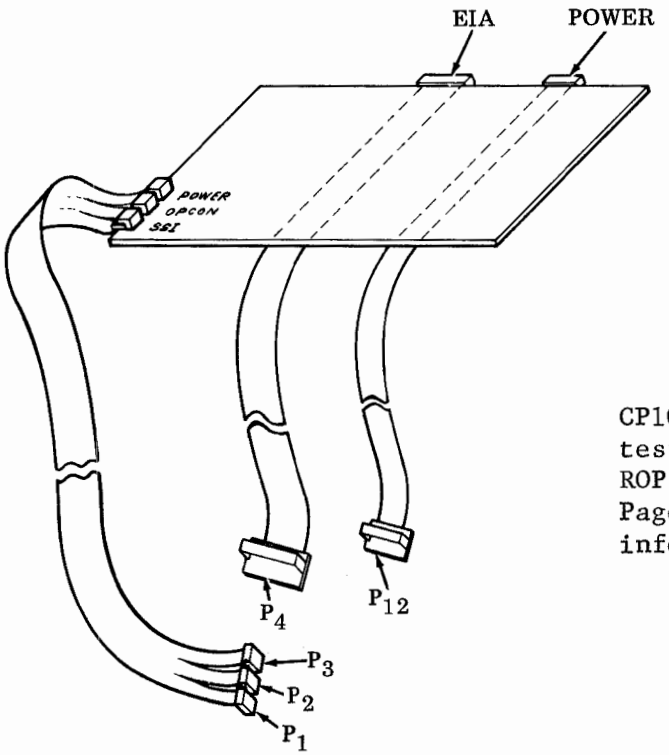

CP10.008.001.1 extender test set for 40C303AA/001 ROP Controller -- See Page 62 for ordering information.

C. TESTING (Cont)

2. TEST SETS (Cont)

Extender Test Set for ROP Controller -- 40C303AA/001 (Cont)

g. Place controller on a clean nonconductive workbench. Carefully plug in P_1, P_2, P_3, P_4, and P_{12} connectors in the printer cabinet to the associated connectors on the extender test set. Carefully connect the extended cable connectors from the test set to the associated integrated controller connectors.

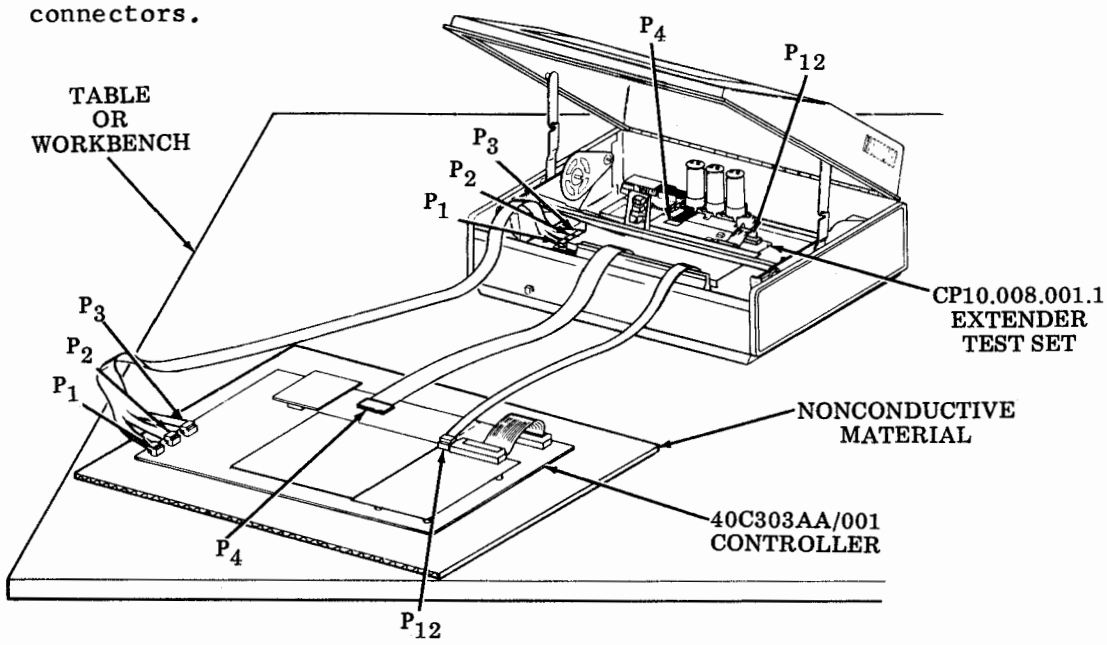

CAUTION: ALWAYS PLACE A NONCONDUCTIVE MATERIAL SUCH AS CARDBOARD OR A WOODEN BENCH TOP BENEATH THE INTEGRATED CONTROLLER WHEN PERFORMING TESTS OUTSIDE OF PRINTER CABINET TO PREVENT SHORTING OF ELECTRICAL COMPONENTS.

Extender Cable for ROP Controller -- 40C303AC/003 and 40C303AD

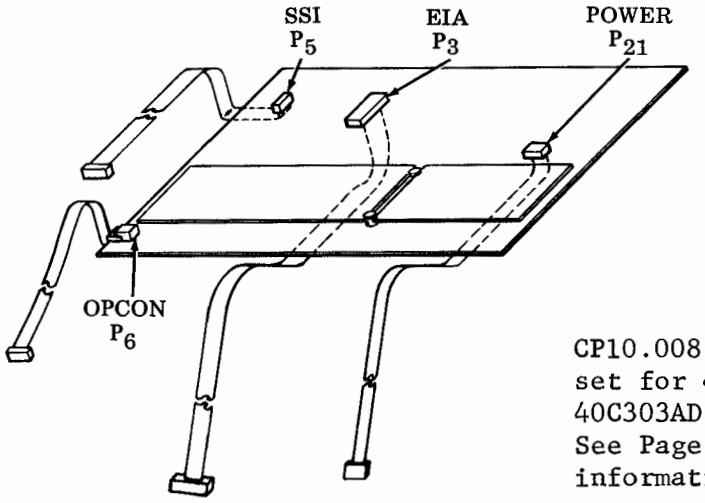

CP10.008.002.1 extender test set for 40C303AC/003 and 40C303AD ROP Controller -- See Page 62 for ordering information.

The CP10.008.002.1 extender test set provides access to the 40C303AC/003 or 40C303AD controller by extending it outside of the printer cabinet.

To install extender test set:

a. Open printer cover by depressing cover releases on both sides of the cover and lift up.
b. Remove printer.
c. Remove controller by following procedure covered in F.4 -- REMOVAL -- ROP CONTROLLER -- 40C303AC/003 or 40C303AD.
d. Slide extender test set down in printer cabinet. Tilt down and connect the associated controller connectors (SSI, OPCON, POWER and EIA) into the extender test set.
e. Route extender test cables outside of printer cabinet.
f. Replace printer.

Extender Test Set for ROP Controller -- 40C303AC/003 or 40C303AD (Cont)

Place controller on a clean nonconductive workbench. Carefully plug in P_3, P_5, P_6, and P_{21} connectors in the printer cabinet to the associated connectors on the extender test set.

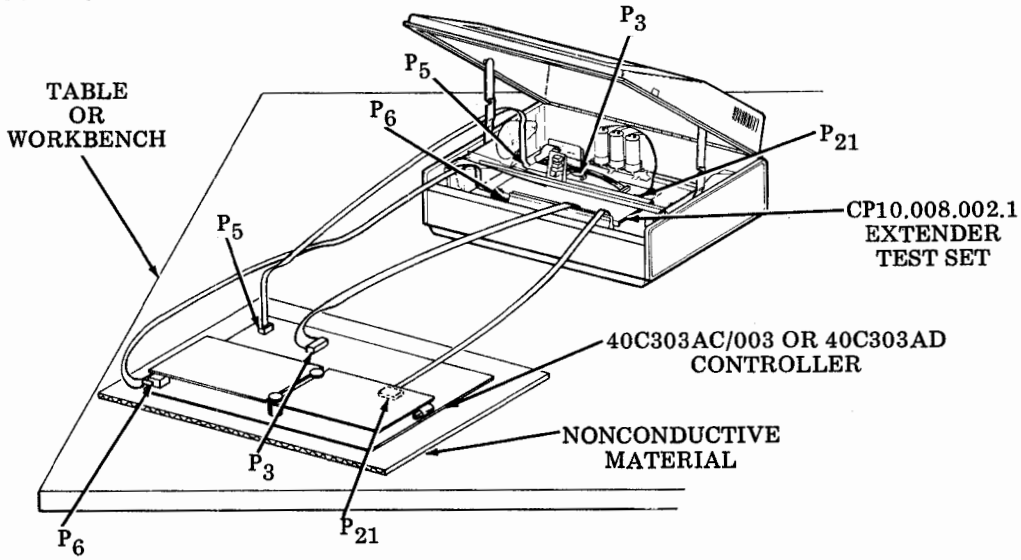

Carefully connect the extended cable connectors from the test set to the associated integrated controller connectors.

CAUTION: ALWAYS PLACE A NONCONDUCTIVE MATERIAL SUCH AS CARDBOARD OR A WOODEN BENCH TOP BENEATH THE INTEGRATED CONTROLLER WHEN PERFORMING TESTS OUTSIDE OF PRINTER CABINET TO PREVENT SHORTING OF ELECTRICAL COMPONENTS.

C. TESTING (Cont)

3. OFF-LINE CHECKOUT -- ROP TERMINALS (40C103)

This table checks the basic operation of Model 40 ROP Terminals.

STEP	PROCEDURE	RESULTS	TROUBLE ANALYSIS
1	Preliminary requirements: a. Ribbon and paper loaded. b. Switches on the printer (cabinet, cover raised) are set as follows: LF--1 Test--Off Forms--On (Tractor Feed Printers only). c. Cabinet cover and pedestal door closed.		
2	Turn on power.	IN SERVICE indicator lights. Fans move air in pedestal. In tractor feed printer, fan in printer cabinet cover also turns on.	•40C103 Controller Analysis •Opcon Analysis •Printer Manual 355
3	Momentarily depress PAPER button (red) on cover of printer cabinet.	Paper feeds out as long as button is depressed.	
4	TRACTOR FEED PRINTER ONLY		
	Depress and release FORMS ADVANCE button (black) on printer cabinet cover.	Paper feeds out until first line of next form is reached, then stops.	
5	Unlatch and raise printer cabinet cover.	IN SERVICE indicator goes out.	
6	Raise cover interlock to maintenance position.	IN SERVICE indicator lights.	•Station Analysis •40C103 Controller Analysis •Opcon Analysis •Printer Manual 355
7	Momentarily set Test switch to ON position then return to OFF position.	Font identification symbol (ie, [illegible], or [illegible]) prints repeatedly while switch is on.	

STEP	PROCEDURE	RESULTS	TROUBLE ANALYSIS
8	FRICTION FEED PRINTER		
	Lift paper roll to simulate a paper alarm. Lower paper roll. Guide paper through window and close cabinet cover.	PAPER indicator lights; IN SERVICE indicator goes out. LOW PAPER indicator goes out; IN SERVICE indicator lights.	
	TRACTOR FEED PRINTER		
	Tear off next form under pedestal top, then depress PAPER button on cabinet top until last form passes through printer. Reload forms and close cabinet cover.	PAPER indicator lights; IN SERVICE indicator goes out. PAPER indicator goes out; IN SERVICE indicator lights.	
9	Depress TEST key (may be labeled TRANS START) (if present) on opcon, then after a few seconds depress again. NOTE: If keytop is not present on opcon, remove blocking keytop to left of IN SERVICE key. Depress switch once to turn on and second time to turn off.	TEST (may be labeled TRANS START) indicator lights and character set is printed repeatedly. Indicator goes out and printing stops when depressed second time.	•40C103 Controller Analysis
10	Raise printer cabinet cover and set LF switch to position 2. Close cover and depress TEST (may be labeled TRANS START) key. While printer is printing, raise cover.	Repeated character set prints with double line spacing. When cover is raised, printer stops and IN SERVICE indicator goes out.	

C. TESTING (Cont)

3. OFF-LINE CHECKOUT -- ROP TERMINALS (40C103) (Cont)

STEP	PROCEDURE	RESULTS	TROUBLE ANALYSIS
11	Restore setting of LF switch (or leave in position 2 if double line spacing is desired). Depress (release) TEST (may be labeled TRANS START) key. If blocking keytop was removed in Step 9, restore keytop to opcon. Close cabinet cover.	IN SERVICE indicator lights.	
This completes Off-Line Checkout -- ROP Terminals W/40C103.			

4. OFF-LINE CHECKOUT -- ROP TERMINALS (40C303AA/001 AND 40C303AD)

This table checks the basic operation of Integrated Asynchronous Model 40 ROP Terminals.

STEP	PROCEDURE	RESULTS	TROUBLE ANALYSIS
1	Preliminary requirements: a. Data set or KD (if KD-ROP station) connected. b. Ribbon and paper loaded. c. Switches on the printer (cabinet cover raised) are set as follows: LF -- 1 (Option 20.a.) Test -- Off Forms -- On (Option 39.a.) (Tractor Feed Printers only). d. Cabinet cover closed. NOTE: The TEST key may be labeled TRANS START.		

STEP	PROCEDURE	RESULTS	TROUBLE ANALYSIS
2	Turn power on.	All lamps on opcon light momentarily, then all extinguish except IN SERVICE lamp which remains on. Audible alarm (if present) will sound for a few seconds. Fan moves air in printer cabinet.	40C303AA/001 or 40C303AD Controller Analysis Opcon Analysis -- Section 3. Check cabinet wiring.
3	Momentarily depress PAPER button (red) on cover of printer cabinet.	Paper feeds out as long as button is depressed.	80-Column and 132-Column Printer Analysis -- Printer Manual 355. Check cabinet wiring.
4	Depress and release FORMS ADVANCE button (black) on printer cabinet cover (tractor feed printer only).	Paper feeds out until first line of next form is reached, then stops.	80-Column and 132-Column Printer Analysis -- Printer Manual 355. Check cabinet wiring.
5	Unlatch and raise printer cabinet cover.	IN SERVICE lamp extinguishes. Audible alarm (if present) sounds.	Check cabinet wiring and Interlock switch.

C. TESTING (Cont)

4. OFF-LINE CHECKOUT -- ROP TERMINALS (40C303AA/001 AND 40C303AD)

STEP	PROCEDURE	RESULTS	TROUBLE ANALYSIS
6	Raise cover interlock to maintenance position.	IN SERVICE lamp lights. Audible alarm (if present) goes off.	If motor was on when cover was raised, depress IN SERVICE button. Check Interlock switch and cabinet wiring.
7	Momentarily set Test switch on printer to ON position then return to OFF position.	Printer motor starts. Font identification symbol (such as ≡A≡ ≡A≡, ≡A≡ ≡0≡, etc, depending on type carrier) prints repeatedly while switch is on. Single line feed occurs. Motor turns off when switch is returned to off. With 132-column printer, DATA ERROR or DATA ERROR and IN SERVICE lamps flash in Test mode. With 80-column printer, DATA ERROR lamp may flash in Test mode.	80-Column and 132-Column Printer Analysis -- Printer Manual 355.
8	Tractor feed printers only: Tear off next form on perforations (end of form) at bottom of printer cabinet, then slowly roll paper out until last form is fed completely out of printer.	If Option 48.a. or 48.b. and form-out contact on a lobe of the form-out belt (form-out contact closed) (40P154 type 80-column printer or 132-column printer only) is selected 40P153 type or 80-column printer is used. PAPER lamp lights, IN SERVICE lamp extinguishes, and audible alarm (if present) sounds when form is partly through printer. If Option 48.b. and form-out contact not on a lobe of the form-out belt (form-out contact open) (40P154	80-Column and 132-Column Printer Analysis -- Printer Manual 355.

STEP	PROCEDURE	RESULTS	TROUBLE ANALYSIS
8 (Cont)		type 80-column printer or 132-column printer only) is selected, PAPER lamp lights and IN SERVICE lamp stays lit.	
	Reload forms and close cabinet cover.	PAPER lamp extinguishes: IN SERVICE lamp lights and audible alarm (if present) goes off. NOTE: If motor is running when cover is closed, IN SERVICE lamp will not light until motor stops.	
	Friction feed printer only: Lift roll of paper so that low paper switch is activated. Replace paper roll.		LOW PAPER lamp lights and audible alarm (if present) sounds. LOW PAPER lamp extinguishes and audible alarm goes off.
9	Depress IN SERVICE button. Depress TEST button on opcon, then depress again after a few seconds. NOTE 1: TRANS START button may be labeled TEST. NOTE 2: Choice of options may cause the printer motor to go off after approximately 3 minutes and 30 seconds instead of 30 seconds (Example: the selection of Options 135.b., 143.b., and 148.a. will cause a delay of approximately 3 minutes and 30 seconds).	IN SERVICE lamp extinguishes. TEST lamp lights, printer motor starts, and character set is printed repeatedly as shown. Lamp extinguishes and printing stops when depressed a second time. (DATA ERROR lamp may light.) Form-out occurs (if Option 39.a. is selected). After TEST lamp is extinguished, printer motor goes off after a delay of approximately 60 seconds (if Option 148.a. is selected -- See Note 2) or approximately 3 minutes and 30 seconds if Option 148.b.	40C303AA/001 or 40C303AD Controller Analysis If font identification symbol appears, refer to Printer manual 355 and verify that Option 19.c. is enabled.

C. TESTING (Cont)

4. OFF-LINE CHECKOUT -- ROP TERMINALS (40C303AA/001 OR 40C303AD) (Cont)

STEP	PROCEDURE	RESULTS	TROUBLE ANALYSIS
9 (Cont)		is selected). IN SERVICE lamp lights approximately 20 seconds before motor goes off.	40C303AA/001 or 40C303AD Controller Analysis
	!"#$%&'()*+,-./Ø123456789:;<=>?@ABCDEFGHIJKLMNOPQRSTUVWXYZ[\]^_ Local Test Message Generated by TRANS START Button (Option 19.c. must be enabled.)		
10	Check printing quality	Characters should be clearly legible and unbroken on original copy. NOTE: The TEST message does not check all printing columns.	80-Column and 132-Column Printer Analysis -- Printer Manual 355.
11	Raise printer cabinet cover and set LF switch to position 2. Close cover.	IN SERVICE indicator extinguishes and audible alarm (if present) sounds. IN SERVICE lamp lights. Audible alarm goes off.	
	Depress IN SERVICE button.	IN SERVICE lamp extinguishes.	
	Depress TEST button.	Repeated character set prints with double line spacing.	80-Column and 132-Column Printer Analysis -- Printer Manual 355.
	While printer is printing, raise cover.	When cover is raised, printer stops. TEST indicator remains on and audible alarm (if present) sounds.	
12	Restore setting of LF switch (or leave in position 2 if Option 20.b. required). Set Forms switch to Off (Option 39.b.).		

STEP	PROCEDURE	RESULTS	TROUBLE ANALYSIS
12 (Cont)	Depress TEST button. Close cabinet cover.	TEST indicator extinguishes. NOTE: DATA ERROR indicator may light. If so, depress DATA ERROR key to extinguish. Motor starts and a few lines of the test message is printed. IN SERVICE indicator lights when motor goes off.	
	Depress and release FORMS ADVANCE button.	Paper feeds out as long as button is depressed, at same rate as from PAPER button.	80-Column and 132-Column Printer Analysis -- Printer Manual 355.
13	Raise cover and restore setting of Forms switch (or leave in Off position if Option 39.b. required). Close cabinet cover.	IN SERVICE lamp lights. (Motor may start if time out from step 12 is not completed. IN SERVICE lamp lights approximately 20 seconds before motor goes off).	
THIS COMPLETES OFF-LINE CHECKOUT OF ROP TERMINALS W/40C303AA/001 OR 40C303AD.			

C. TESTING (Cont)

5. OFF-LINE CHECKOUT -- ROP TERMINALS (40C303AC/003)

This table checks the basic operation of Integrated Synchronous Model 40 ROP Terminals.

STEP	PROCEDURE	RESULTS	TROUBLE ANALYSIS
1	Preliminary requirement: a. Data set connected. b. Ribbon and paper loaded. c. Switches (top left) set as follows: LF -- 1 (Option 20.a.) Test -- Off d. Cabinet cover closed.		
2	Turn power on.	IN SERVICE lamp turns on. Fan moves air in printer cabinet.	40C303AC/003 Controller Analysis. Opcon Analysis. Check: a. PAPER lamp not lit. b. Cabinet Interlock switch is closed. c. Cabinet wiring.
3	Momentarily depress PAPER button (red) on cover of printer cabinet.	Paper feeds out as long as button is depressed.	80-Column and 132-Column Printer Analysis -- Printer Manual 355. Check cabinet wiring.

STEP	PROCEDURE	RESULTS	TROUBLE ANALYSIS
4	Depress and release FORMS ADVANCE button (black) on printer cabinet cover.	Paper feeds out until first line of next form is reached, then stops.	80-Column and 132-Column Printer Analysis -- Printer Manual 355. Check cabinet wiring.
5	Unlatch and raise printer cabinet cover.	IN SERVICE lamp extinguishes.	Check cabinet wiring and Interlock switch.
6	Raise cover interlock to maintenance position.	IN SERVICE lamp stays off.	If motor was on when cover was raised, depress IN SERVICE button. Check Interlock switch and cabinet wiring.
7	Momentarily set Test switch to ON position, then return to OFF position.	Printer motor starts. Font identification symbol (such as ≡A≡ ≡A≡ , ≡A≡ ≡8≡ , etc, depending on type carrier) prints repeatedly while switch is on. Single line feed occurs. Motor turns off when switch is returned to off.	80-Column and 132-Column Printer Analysis -- Printer Manual 355.
8	Depress IN SERVICE button. Tear off next form on perforations (end of form) at bottom of printer cabinet, then slowly roll paper out until last form is fed completely out of printer. Reload forms and close cabinet cover.	IN SERVICE lamp lights. PAPER lamp lights and IN SERVICE lamp extinguishes when form is partly through printer. PAPER lamp extinguishes.	80-Column and 132-Column Printer Analysis -- Printer Manual 355.

C. TESTING (Cont)

5. OFF-LINE CHECKOUT -- ROP TERMINALS (40C303AC/003) (Cont)

STEP	PROCEDURE	RESULTS	TROUBLE ANALYSIS
9	Depress TEST button on opcon, then depress again after a few seconds.	TEST lamp lights, printer motor starts, and character set is printed repeatedly as shown beginning in column as selected by Options 17., 121., and 131. Lamp extinguishes and printing stops when depressed a second time. Form-out occurs (if Option 39.a. is selected), feed-out occurs (if Options 18.b. and 39.b. are selected) or no feed-out (if Options 18.a. and 39.b. are selected). After TEST lamp is extinguished, printer motor goes off after a delay of approximately 20 seconds. IN SERVICE lamp lights approximately 3 seconds after TEST lamp extinguishes.	40C303AC/003 Controller Analysis If font identification symbol appears, refer to Printer Manual 355 and verify that Option 19.a. or c. is enabled. 40C303AC/003 Controller Analysis
	Depress IN SERVICE button (OFF), depress TEST button on Opcon, then depress IN SERVICE button (ON) after a few seconds.	Form-out occurs (if Option 39.a. is selected), feed-out occurs (if Options 18.b. and 39.b. are selected) or no feed-out (if Options 18.a. and 39.b. are selected). After TEST lamp is extinguished, printer motor goes off after a delay of approximately 20 seconds. IN SERVICE lamp lights approximately 3 seconds after TEST lamp extinguishes.	

!"#$%&'()*+,-./0123456789:;<=>?@ABCDEFGHIJKLMNOPQRSTUVWXYZ [\ ] ^ _ (for ASCII† Type carrier)
!"#$%&'()*+,-./0123456789:;<=>?@ABCDEFGHIJKLMNOPQRSTUVWXYZ ¬ \ | ¢ _ (for EBCDIC‡ Type carrier)
Ξ Ξ #$%& Ξ Ξ Ξ * Ξ ,-./0123456789 Ξ Ξ ◊ Ξ Ξ Ξ @ABCDEFGHIJKLMNOPQRSTUVWXYZ Ξ Ξ Ξ Ξ Ξ Ξ (for 48 character set)

TYPE FONT SYMBOL (TYPICAL)

Local Test Message Generated by TEST Button (Option 19.c. must be enabled)

† American National Standard Code for Information Interchange.
‡ Extended Binary Coded Decimal Interchange Code.

STEP	PROCEDURE	RESULTS	TROUBLE ANALYSIS
10	Check printing quality.	Characters should be clearly legible and unbroken on original copy. NOTE: The TEST message does not check all printing columns.	80-Column and 132-Column Printer Analysis -- Printer Manual 355.
11	Raise printer cabinet cover. Set LF switch to position 2. Close cover. Depress TEST button. While printer is printing, raise cover.	 IN SERVICE lamp remains off. Repeated character set prints with double line spacing. When cover is raised, printer stops. TEST lamp extinguishes.	 80-Column and 132-Column Printer Analysis -- Printer Manual 355.
12	Restore setting of LF switch (or leave in position 2 if Option 20.b. required). Set Forms switch to Off (Option 39.b.). Close cabinet cover. Depress and release FORMS ADVANCE button.	 IN SERVICE lamp comes ON. Paper feeds out as long as button is depressed.	 80-Column and 132-Column Printer Analysis -- Printer Manual 355.
13	Tear form off below cabinet. Depress IN SERVICE button (OFF). Depress TEST button (ON).	IN SERVICE lamp extinguishes, TEST lamp lights, and TEST message prints. Printing stops when end of form passes Paper-Out switch, PAPER-OUT lamp turns on and TEST lamp extinguishes.	

C. TESTING (Cont)

5. OFF-LINE CHECKOUT -- ROP TERMINALS (40C303AC/003) (Cont)

STEP	PROCEDURE	RESULTS	TROUBLE ANALYSIS
14	Raise cover and restore setting of Forms switch (or leave in Off position if Option 39.b. required). Close cabinet cover.		
THIS COMPLETES OFF-LINE CHECKOUT OF ROP TERMINALS WITH 40C303AC/003.			

6. ON-LINE CHECKOUT -- ROP TERMINALS

With the ROP properly interfaced to the system where it will be used, conduct a complete checkout of the receive capabilities taking into account all option and feature variables.

D. TROUBLESHOOTING

1. GENERAL

The following caution procedures must be observed when troubleshooting.

CAUTION 1: TURN OFF ALL POWER OR SIGNAL SOURCES BEFORE REMOVING OR REPLACING ANY COMPONENT.

CAUTION 2: TO AVOID POSSIBLE INTERNAL DAMAGE TO CIRCUITRY, WEAR A 346392 STATIC DISCHARGE STRAP CONNECTED TO GROUND TO ALLOW STATIC DISCHARGE BEFORE HANDLING CIRCUIT CARDS FOR REMOVAL OR REPLACEMENT. AVOID TOUCHING CIRCUIT LANDS AND CARD COMPONENTS AS MUCH AS POSSIBLE.

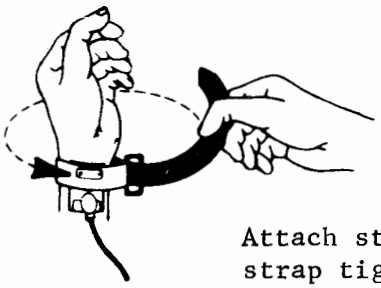

Attach static ground strap tightly to wrist as shown.

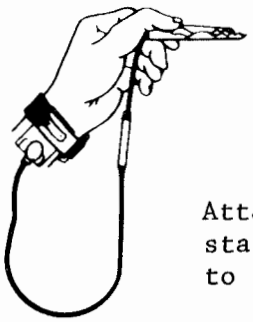

Attach clip end of static discharge strap to frame ground.

The 40C103 and 40C303 ROP controller troubleshooting guides provide a step-by-step question and response sequence, which determines the correct directive for the repair of the trouble. Use the troubleshooting guides as follows:

a. Always start with question 1.
b. Answer analysis questions and follow proper response directive to isolate and correct the trouble.
c. Where more than one component is specified for replacement, substitute one at a time in the order specified. The original component shall be replaced if the trouble is not corrected before making the next indicated substitution. When installing a replacement component, make certain that all options (if present) in this component are programmed for proper operation. If replacement of the part or subcomponent indicated does not correct the trouble, replace the next higher order of component (ie, circuit card, wired frame, or entire controller).

Once the trouble is corrected, repeat the checkout to assure correct performance. Remember, in all trouble analysis, response is directly affected by the options selected. The actual response should always be checked with respect to the controller optioning.

2. 40C103 ROP CONTROLLER TROUBLESHOOTING GUIDE

NOTE 1: 40C103/AD ROP Controller includes a buffer (character storage).

NOTE 2: 40C103/AE ROP Controller does not include a buffer.

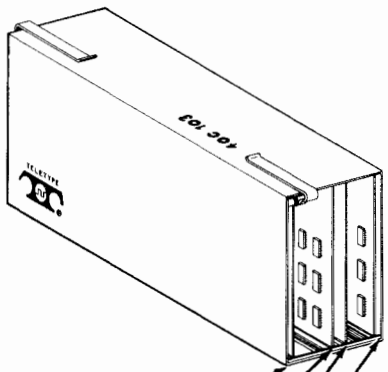

CIRCUIT CARD LOCATION

40C103/AD	40C103/AE	POSITION
410582	410582	JA
410581 or 410585	410587	JB
410580	410580	JC
410583	410583	JD

410581 and 410585 (standard) are interchangeable.

ANALYSIS QUESTION	"YES" RESPONSE DIRECTIVE	"NO" RESPONSE DIRECTIVE
1. Does IN SERVICE lamp on ROP opcon fail to light?	Replace 410580 circuit card.	Go to 2.
2. Is the correct test message printed when the TRANS START key	Go to 3.	Replace 410583 circuit card.

D. TROUBLESHOOTING (Cont)

2. 40C103 ROP CONTROLLER TROUBLESHOOTING GUIDE (Cont)

ANALYSIS QUESTION	"YES" RESPONSE DIRECTIVE	"NO" RESPONSE DIRECTIVE
2. (Cont) on the ROP opcon is depressed, and does the TRANS START lamp turn ON?		Replace 410582 circuit card. Replace 410580 circuit card.
3. Are messages received on-line? (Are reverse channel and the interrupt feature operating properly?)	Go to 4.	Check data set and transmission line facilities. Replace 410580 circuit card. Replace 410582 circuit card.
4. Do messages received on-line contain errors? (Does the DATA ERROR lamp, if used, remain OFF when errors are received, or turn ON when errors are not received?)	Replace 410580 circuit card. Replace 410582 circuit card. Replace 410584 circuit card (interconnecting).	If controller code is 40C103/AE, go to 5. If controller code is 40C103/AD, go to 6.
5. Does data stacking feature operate properly -- no loss of characters (40C103/AE)? NOTE: Data stacking prevents data loss by placing more characters on printed lines (no buffer).	ROP controller is OK. Trouble is elsewhere.	Check to see that controller has a 410587 circuit card in position JB, Issue 2 or later. Check to see that Option 30.a. on 410582 is enabled. Replace 410582 circuit card.
6. Is the buffer (character storage) operating properly -- no lost characters or blocks of characters, no erroneous message termination, etc?	ROP controller is OK. Trouble is elsewhere.	Replace 410581 or 410585 circuit card. NOTE: These two cards are interchangeable. Replace 410580 circuit card. Replace 410582 circuit card.

3. 40C303AA/001 CONTROLLER TROUBLESHOOTING GUIDE

ANALYSIS QUESTION	"YES" RESPONSE DIRECTIVE	"NO" RESPONSE DIRECTIVE
1. Were any opcon lamps flashing (not ON steady or flickering rapidly)?	Refer to Opcon Lamp Analysis below. If controller trouble is indicated, go to 2; if not, take step indicated.	If no lamps are ON, verify that P3 (left side) and J12 (rear) connectors are connected firmly; if so, check voltages to controller using wiring diagram packages WDP 0463, 0436, and 0481. If good, go to 2. If all four lamps are ON steady, press key. If lamps do not reset, check both 4 A SL-BL fuses (129919) on rear of printer; if good, replace printer. If lamps reset when depressed, go to 4. If lamps are flickering rapidly, verify that J12 (rear) connector is connected firmly; if so, go to 5.

Opcon Lamps Flashing

INTRPT	TRANS START	IN SERVICE	DATA ERROR	Required Action
X				Replace data set*
X			X	Replace data set*
X	X	X	X	Replace data set*
			X	Verify that SSI cable is securely mated to card. If so, refer to 80-Column and 132-Column Printer Analysis* -- Printer Manual 355.
		X	X	Refer to 80-Column and 132-Column Printer Analysis* -- Printer Manual 355.
	X			Refer to 80-Column and 132-Column Printer Analysis*† -- Printer Manual 355.
	X		X	Refer to 80-Column and 132-Column Printer Analysis* -- Printer Manual 355.
		X		Refer to 40C303AA/001 Controller Analysis Question 2.
	X	X	X	Refer to 40C303AA/001 Controller Analysis Question 2.

*If replacing data set does not clear trouble, or if printer analysis indicates printer is good, continue with Integrated Controller Analysis -- Analysis Question 2.

†This will happen in normal operation when a tractor feed printer is used and a paper alarm occurs on-line.

Opcon Lamp Analysis

D. TROUBLESHOOTING (Cont)

3. 40C303AA/001 CONTROLLER TROUBLESHOOTING GUIDE (Cont)

ANALYSIS QUESTION	"YES" RESPONSE DIRECTIVE	"NO" RESPONSE DIRECTIVE
2. Have compatible (usable) options been selected?	Go to 3.	Review controller and printer option section and eliminate any incompatible or undesirable option selections. Change options and retest.
3. Have all controller options (101. through 158. and 191.)been verified? (102. through 155. should be verified with 407346 test ROM kit, not just visually.)	Go to 4.	Check for wrong switch settings for Options 101., 156., 157., and 158. Check that diodes are properly located for Option 191. Plug 407346 test ROM into 410142 ROM card as indicated on case of kit and verify 410141 diode matrix card optioning. Replace 410141 card or replace any open or incorrectly cut diodes on card with 407336 diodes and cut out any diodes that should not be in. If all options are good, go to 4.
4. Measure voltage between P11-2 (GRD) and P11-1 on piggyback connector for 410140 variable bit timer card. Is voltage: 0 V? about +3 V? +5 V?	 Check Option 101. If good, replace 410140 card and retest. If trouble remains, replace 410727 card. Go to 5. Replace 410140 card.	

ANALYSIS QUESTION	"YES" RESPONSE DIRECTIVE	"NO" RESPONSE DIRECTIVE
5. Replace 410727 and 410142 cards as a unit and retest. Is trouble cleared?	Go to 6.	Replace 410140 card.
6. Replace 410727 card alone (use original 410142 card) and retest. Is trouble cleared?	Original 410727 card is defective.	Original 410142 card is probably defective. Replace it alone and retest. Further trouble may indicate cables or connectors are defective. Go to opcon analysis section in Manual 352.

4. <u>40C303AC/003 CONTROLLER TROUBLESHOOTING GUIDE</u>

ANALYSIS QUESTION	"YES" RESPONSE DIRECTIVE	"NO" RESPONSE DIRECTIVE
1. Were any opcon lamps flashing (not ON steady or flickering rapidly)?	Refer to Opcon Lamp Analysis on next page. If controller trouble is indicated, go to 2; if not, take step indicated.	If no lamps are ON, verify that P6 (left side) and P21 (rear) connectors are connected firmly; if so, check voltages to controller using wiring diagram packages WDP 0515, 0435, and 0462. If good, go to 2. If all four lamps are ON steady, press key. If lamps do not reset, check both 129919 4 amp SL-BL fuses on rear of printer; if good, replace printer. If lamps reset when depressed, go to 4.

D. TROUBLESHOOTING (Cont)

4. 40C303AC/003 CONTROLLER TROUBLESHOOTING GUIDE (Cont)

Opcon Lamps Flashing				
ALARM	POL SEL	IN SERVICE	TEST	Required Action
X			X	Verify that SSI cable is securely mated to card. If so, refer to 80-Column and 132-Column Printer Analysis -- Printer Manual 355*
X		X		Refer to 80-Column and 132-Column Printer Analysis -- Printer Manual 355*
X	X	X		Refer to 80-Column and 132-Column Printer Analysis -- Printer Manual 355*
X		X	X	Refer to 80-Column and 132-Column Printer Analysis -- Printer Manual 355*
X	X			Refer to 80-Column and 132-Column Printer Analysis -- Printer Manual 355*
X	X	X	X	Replace circuit card 410733; if flashing lamps continue with 40C303AC/003 Controller Analysis -- Question 2. †

*If printer analysis indicates printer is good, continue with 40C303AC/003 Controller Analysis -- Question 2.
†In addition to the indicated lamps flashing the two unmarked lamps will flash.

Opcon Lamp Analysis

ANALYSIS QUESTION	"YES" RESPONSE DIRECTIVE	"NO" RESPONSE DIRECTIVE
2. Have compatible (usable) options been selected?	Go to 3.	Review controller and printer option section and eliminate any incompatible or undesirable option selections. Change options and retest.
3. Have all controller options (121. through 190.) been verified? Options can be verified by removing blocking key-top on far right and depressing key. The printer will give a printout of the opcon diodes.	Go to 4.	Check for wrong switch settings for Options 189. and 190. Replace 410734 card or replace any open or incorrectly cut diodes on card with 407336 diodes and cut out any diodes that should not be in. If all options are good, go to 4.

ANALYSIS QUESTION	"YES" RESPONSE DIRECTIVE	"NO" RESPONSE DIRECTIVE
4. Replace 410733 and 410735 cards as a unit and retest. Is trouble cleared?	Go to 5.	Replace 410734 card.
5. Replace 410733 card alone (use original 410735 card) and retest. Is trouble cleared?	Original 410733 card is defective.	Original 410735 card is probably defective. Replace it alone and retest. Further trouble may indicate cables or connectors are defective. Go to opcon analysis section in Manual 352.

5. <u>40C303AD CONTROLLER TROUBLESHOOTING GUIDE</u>

ANALYSIS QUESTION	"YES" RESPONSE DIRECTIVE	"NO" RESPONSE DIRECTIVE
1. Were any opcon lamps flashing (not ON steady or flickering rapidly)?	Refer to Opcon Lamp Analysis on next page. If controller trouble is indicated, go to 2; if not, take step indicated.	If no lamps are ON, verify that P6 (left side) and P21 (rear) connectors are connected firmly; if so, check voltages to controller using wiring diagram package WDP 0515. If good, go to 2. If all four lamps are ON steady, press key. If lamps do not reset, check both 129919 4 amp SL-BL fuses on rear of printer; if good, replace printer. If lamps reset when depressed, go to 4.

D. TROUBLESHOOTING (Cont)

5. 40C303AD CONTROLLER TROUBLESHOOTING GUIDE (Cont)

OPCON LAMPS FLASHING						
SPARE	INTERRUPT	TEST	IN SERVICE	DATA ERROR	SPARE	CAUSE FOR ALARM
OFF	OFF	OFF	OFF	ON	ON	PRINTER TROUBLE CONTROLLER TROUBLE
OFF	OFF	OFF	ON	OFF	OFF	PRINTER TROUBLE
OFF	OFF	OFF	ON	OFF	ON	PRINTER TROUBLE
OFF	OFF	OFF	ON	ON	OFF	CONTROLLER TROUBLE
OFF	OFF	OFF	ON	ON	ON	CONTROLLER TROUBLE DATA SET TROUBLE
OFF	ON	OFF	OFF	OFF	OFF	CONTROLLER TROUBLE DATA SET TROUBLE
OFF	ON	OFF	OFF	ON	OFF	CONTROLLER TROUBLE
OFF	ON	OFF	OFF	ON	ON	CONTROLLER TROUBLE
OFF	OFF	ON	ON	ON	OFF	CONTROLLER TROUBLE
OFF	OFF	ON	ON	ON	ON	CONTROLLER TROUBLE DATA SET TROUBLE

NOTE: With printer troubles, refer to 80-Column and 132-Column Printer Analysis -- Printer Manual 355.

If printer analysis indicates printer is good, continue with 40C303AD Controller Analysis -- Question 2.

ANALYSIS QUESTION	"YES" RESPONSE DIRECTIVE	"NO" RESPONSE DIRECTIVE
2. Have compatible (usable) options been selected?	Go to 3.	Review controller and printer option section and eliminate any incompatible or undesirable option selections. Change options and retest.
3. Have all controller options (101. through 191.) been verified? NOTE: On 410737 card, make sure that on switch pack 1 -- Switch 1 and 3 are closed (or ON) Switch 2 and 4 are open (or OFF).	Go to 4.	Check for wrong switch settings for Options 189. and 190. Check that diodes are properly located for Option 191. Replace 410734 card or replace any open or incorrectly cut diodes on card with 407336 diodes and cut out any diodes that should not be in. If all options are good, go to 4.
4. Replace 410737 and 410735 cards as a unit and retest. Is trouble cleared?	Go to 5.	Replace 410734 card.
5. Replace 410737 card alone (use original 410735 card) and retest. Is trouble cleared?	Original 410737 card is defective.	Original 410735 card is probably defective. Replace it alone and retest. Further trouble may indicate cables or connectors are defective. Go to opcon analysis section in Manual 352.

E. ADJUSTMENTS AND LUBRICATION

The Model 40 ROP controllers do not have any recommended adjustment. The only required mechanical action is to make sure all circuit cards and cable connectors are firmly seated.

Lubrication is not needed on controller components.

F. DISASSEMBLY/REASSEMBLY AND PARTS

1. GENERAL

This section provides the disassembly/reassembly and part replacement procedures needed to properly service the Model 40 ROP controllers. Step-by-step procedures are given for all component removal. Disassembly and reassembly of the controllers are given in the form of exploded views.

Certain procedural demands are to be maintained by servicing personnel for circuit card removal.

a. Turn off terminal power switch.
b. Put on 346392 static discharge strap to avoid damage to sensitive circuitry.
c. Remove cards as shown in Parts 2 and 3.
d. Transport circuit cards by handles or edge of card.
e. Avoid touching circuits lands or card components.

The procedural demands for component removal, after card removal:

a. Remove ac plug from its wall receptacle before attempting any disassembly.
b. Remove signal source cabling before attempting any disassembly.

NOTE: When ordering replaceable components, unless otherwise specified, prefix each part number with the letters "TP" (ie, TP410055).

2. REMOVAL -- ROP CONTROLLER -- 40C103

① Disconnect ac power to station. Remove ac plug from its wall receptacle.

② Slide tabs inward.

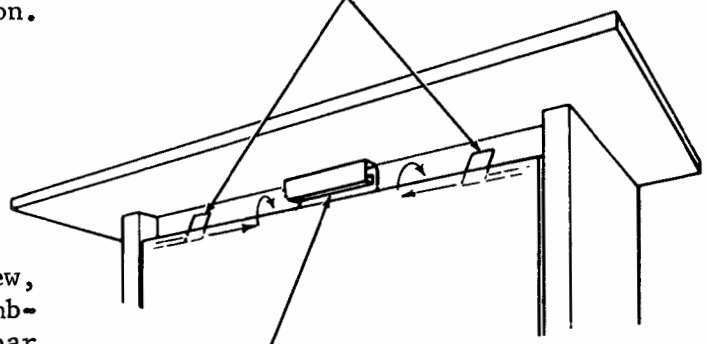

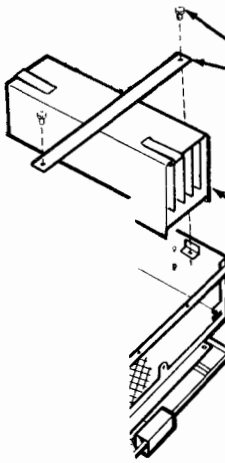

④ Loosen 401676 screw, remove 401688 thumb-screw, and swing bar aside out of the way.

⑤ Lift extractor handles. Lift controller off its connectors and locating pins.

③ Push up on grip latch and pull out slowly.

DANGER: ATTACHED ELECTRONICS PACKAGE WEIGHS APPROXIMATELY 50 POUNDS AND MAY DROP SUDDENLY.

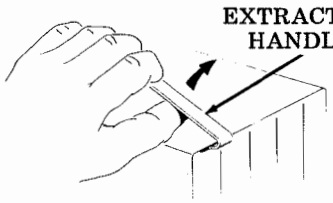

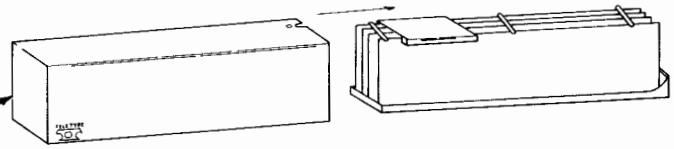

See Page 7-104 for housing and card removal.

CAUTION: TO AVOID POSSIBLE INTERNAL DAMAGE TO THE MOS DEVICES, OR CARD WITH MOS DEVICES, DUE TO ELECTRICAL STATIC DISCHARGE BY SERVICE PERSONNEL, THE FOLLOWING SHOULD BE OBSERVED: ALL PERSONNEL HANDLING MOS DEVICES, OR CIRCUIT CARDS WITH MOS DEVICES, MUST WEAR A 346392 STATIC DISCHARGE STRAP ADJUSTED TO MAKE FIRM CONTACT WITH THE SKIN AT ALL TIMES.

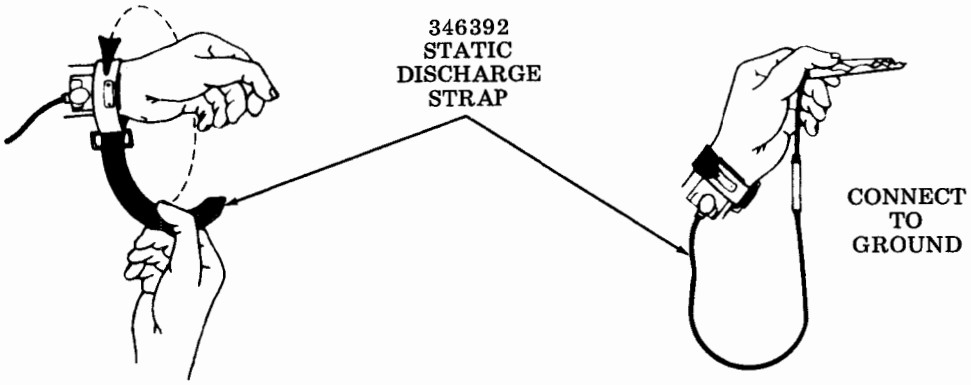

346392 Static Discharge Strap

F. DISASSEMBLY/REASSEMBLY AND PARTS (Cont)

3. REMOVAL -- ROP CONTROLLER -- 40C303AA/001

Precautions should be taken to assure that the controller is disassembled and reassembled under clean conditions. No oil, grease, or other liquids should be present on loose parts, circuit cards, or cable connectors.

To remove controller from cabinet:

① Open cover by depressing cover releases on both sides of the cover and lift up.

② Remove printer.

③ Loosen 401582 nut at each end of paper guide. Slide paper guide to left, raising right end to clear 401582 nut. Slide paper guide to right and remove.

④ Unplug P1, P2, and P3 connectors from the circuit card.

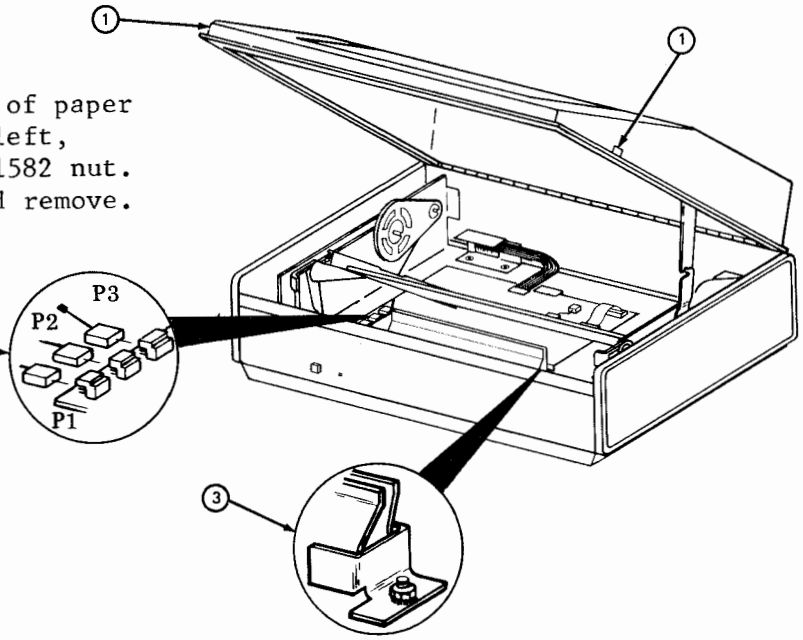

⑤ Unplug P4 and J12 connectors from circuit card.

NOTE: In reassembly of J12 connector, look at connector from under cradle and carefully make connection.

⑥ Slide controller circuit card forward, tilt up and remove. Use care to avoid snagging circuit components or option switches on rear edge of printer cradle.

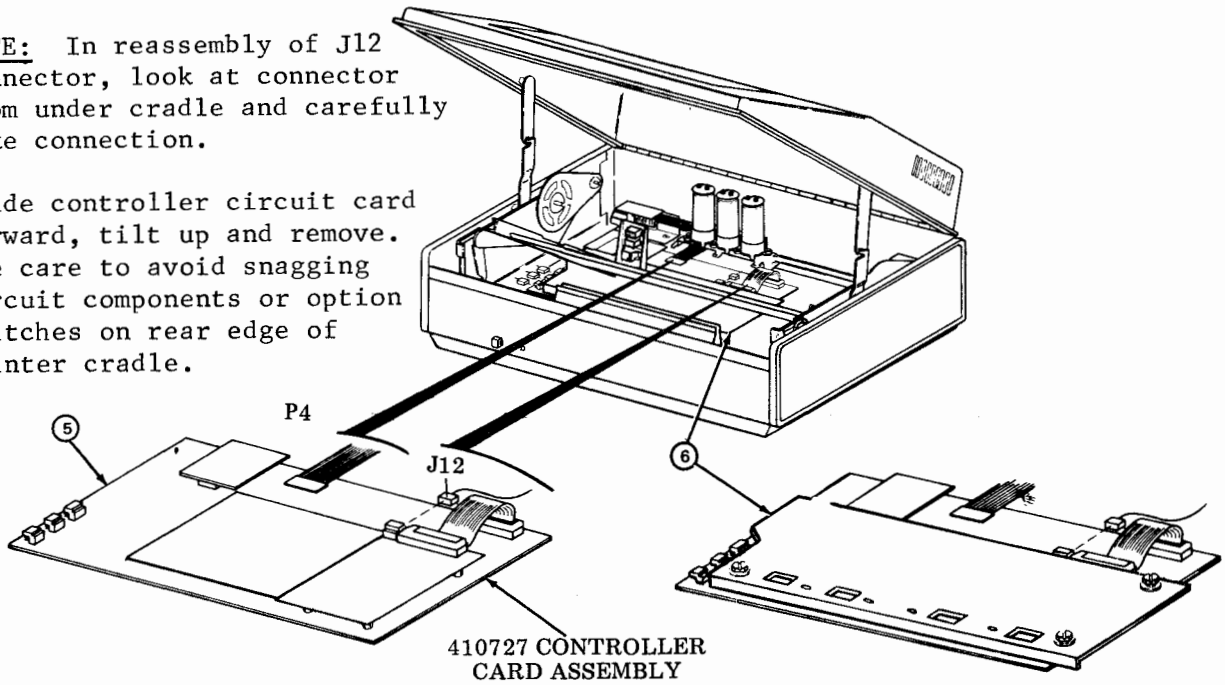

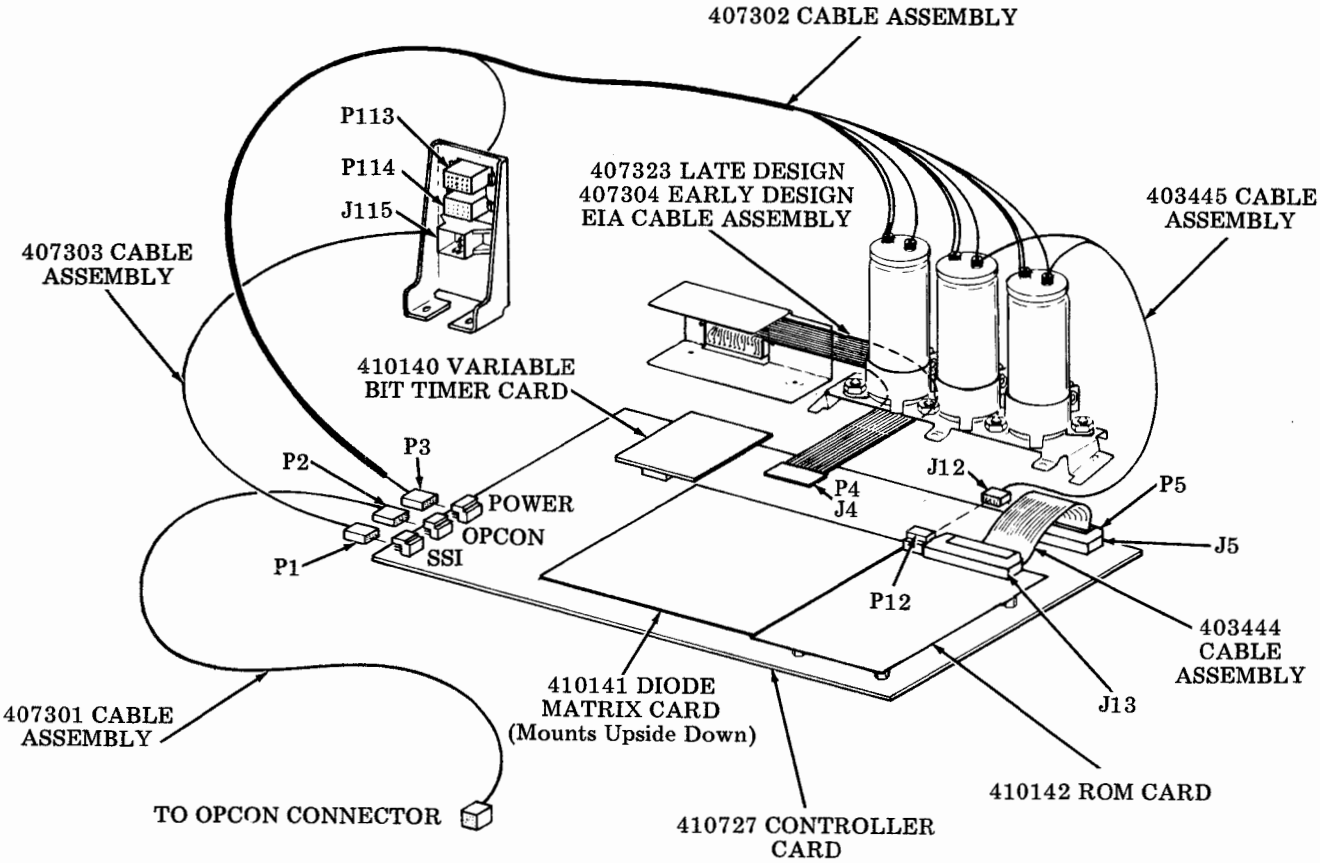

Controller Cabling and Connections -- 40C303AA/001

To remove 407336 diode from card:

- Remove controller.
- Remove controller cover.
- Remove 410141 diode matrix card and invert.

- For option purposes, diode should be cut at each end with 408071 cutting pliers and removed completely.

- To reinstall a cut diode, unsolder the cut ends of the previous diode and remove. Insert new 407336 diode with banded end facing circuit packs as shown above, bend leads, clip off excess, and resolder.

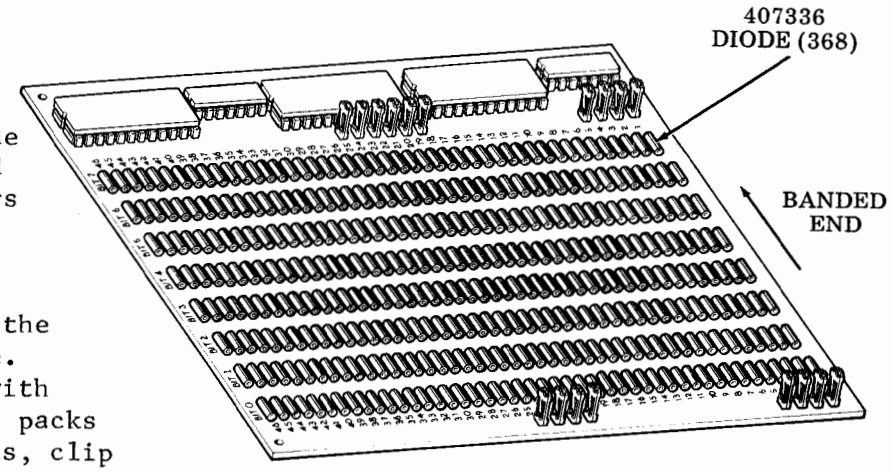

410141 Diode Matrix Card (Inverted)

CAUTION: SOLDERING IRON NOT TO EXCEED 60 WATTS.

F. DISASSEMBLY/REASSEMBLY AND PARTS (Cont)

4. REMOVAL -- ROP CONTROLLER --40C303AC/003 OR 40C303AD

Observe and follow the static discharge grounding precautions detailed in part 3.

Precautions should be taken to assure that the controller is disassembled and reassembled under clean conditions. No oil, grease, or other liquids should be present on loose parts, circuit cards, or cable connectors.

To remove controller from cabinet:

① Open cover by depressing cover releases on both sides of the cover and lift up.

② Remove printer.

③ Loosen 401582 nut at each end of paper guide. Slide paper guide to left, raising right end to clear 401582 nut. Slide paper guide to right and remove.

④ Unplug P3, P5, P6 and P21 connectors from the controller.

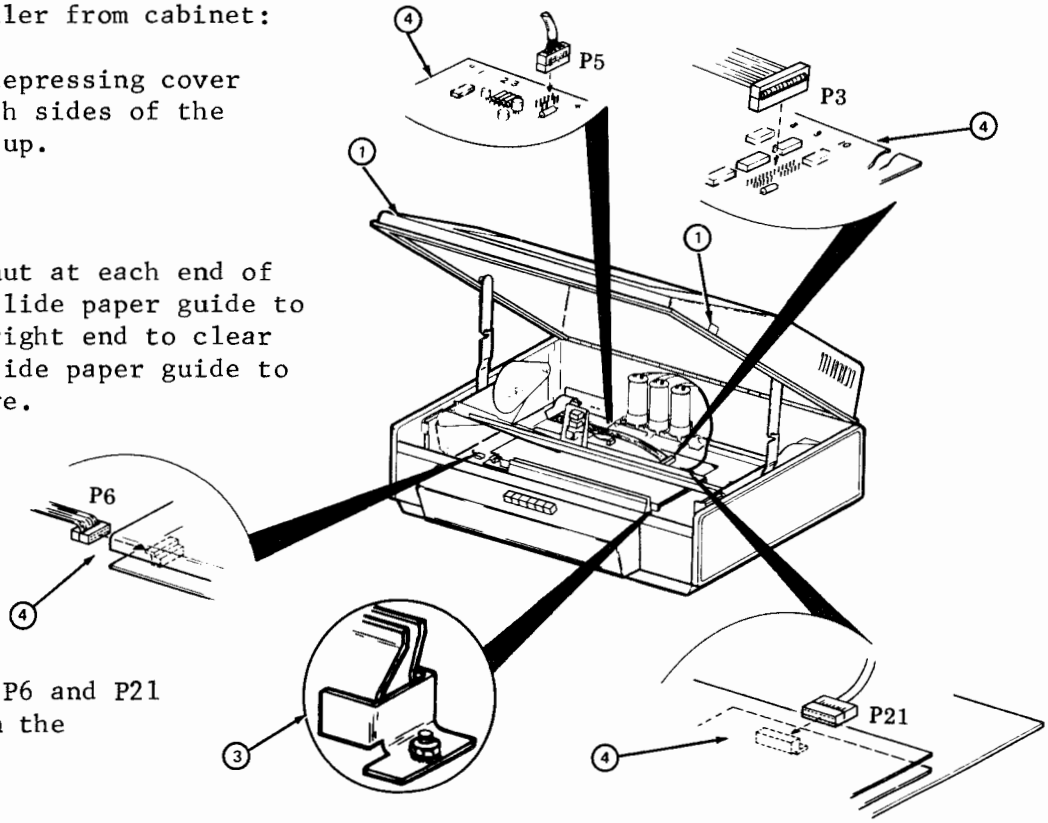

⑤ Slide controller circuit card forward, tilt up and remove. Use care to avoid snagging circuit components or option switches on rear edge of printer cradle.

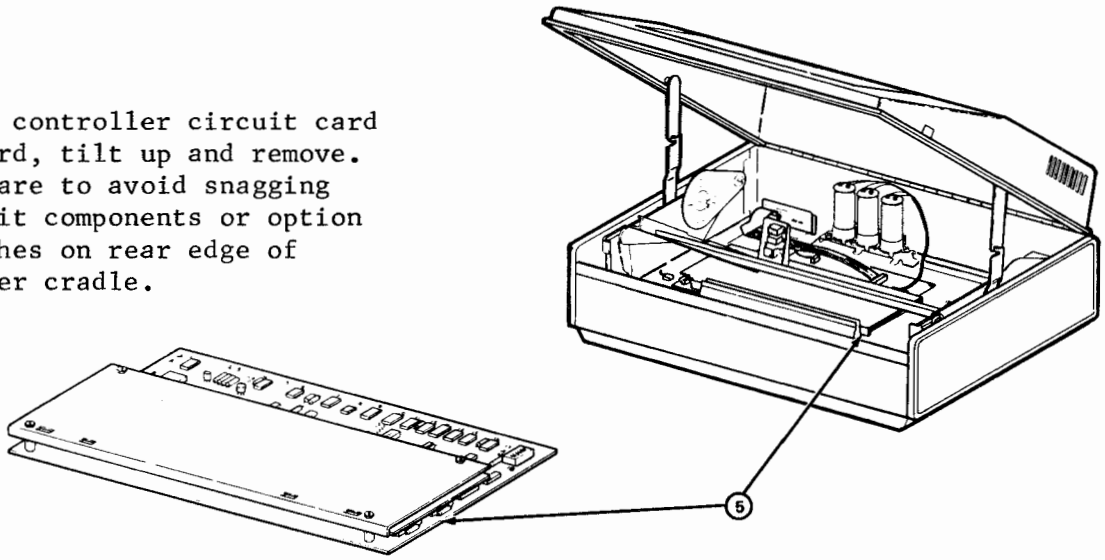

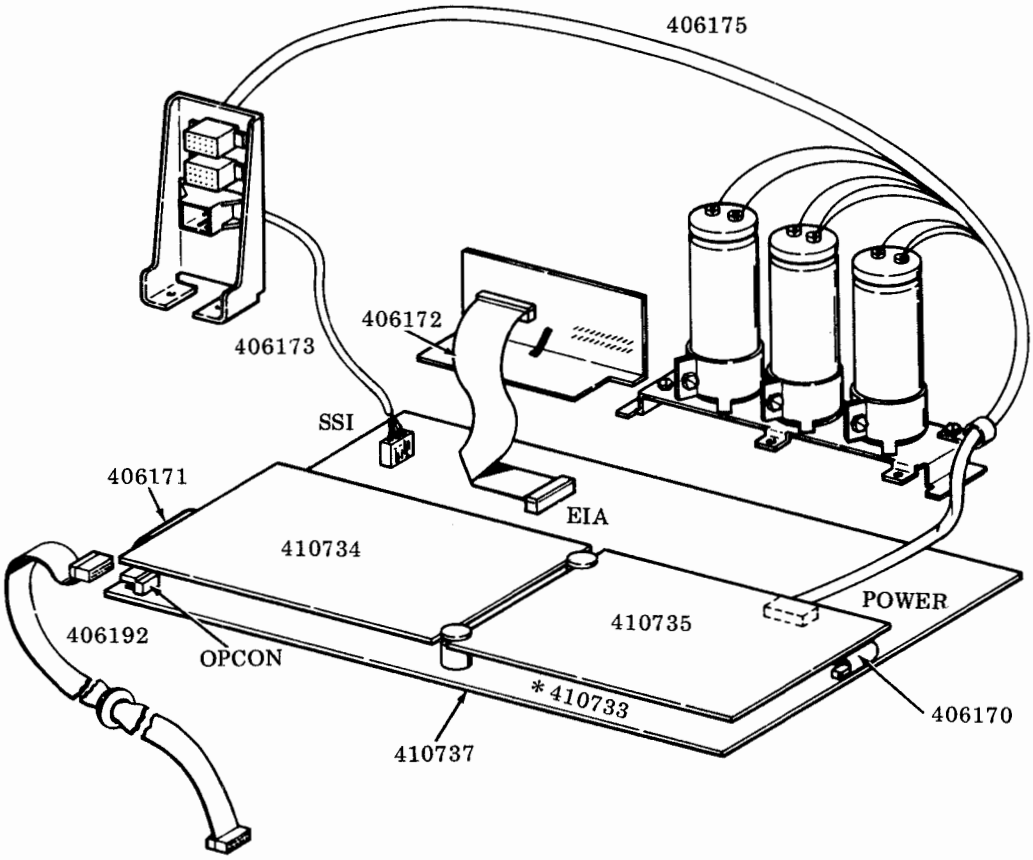

Controller Cabling and Connections -- 40C303AC/003 or 40C303AD

To remove 407336 diode from card:

- Remove controller.
- Remove controller cover.
- Remove 410734 diode matrix card and invert.

- For option purposes, diode should be cut at each end with 408071 cutting pliers and removed completely.

- To install a new diode, unsolder the cut ends of the previous diode and remove. Insert new 407336 diode with banded end facing circuit packs as shown above, bend leads, clip off excess, and resolder.

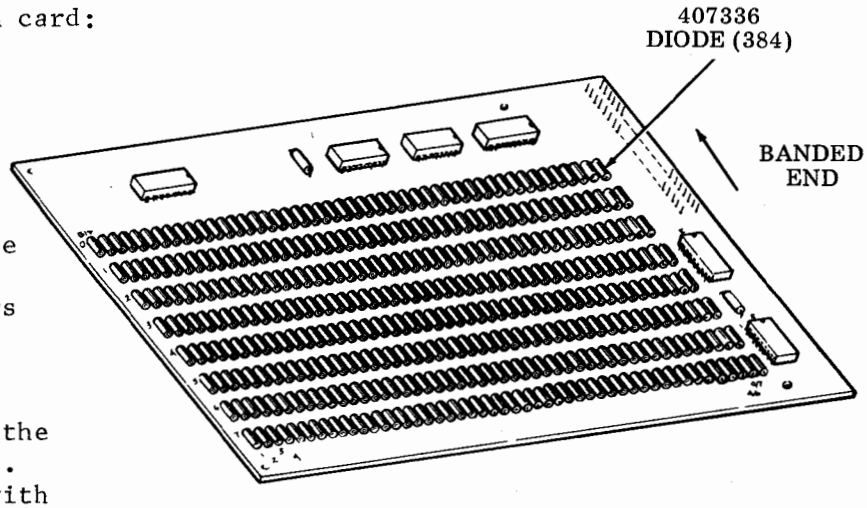

410734 Diode Matrix Card (Inverted)

CAUTION: SOLDERING IRON NOT TO EXCEED 60 WATTS.

*410733 circuit card for 40C303AC/003
410737 circuit card for 40C303AD

F. DISASSEMBLY/REASSEMBLY AND PARTS

5. PARTS -- 40C103/-- ROP CONTROLLER

Replaceable Components

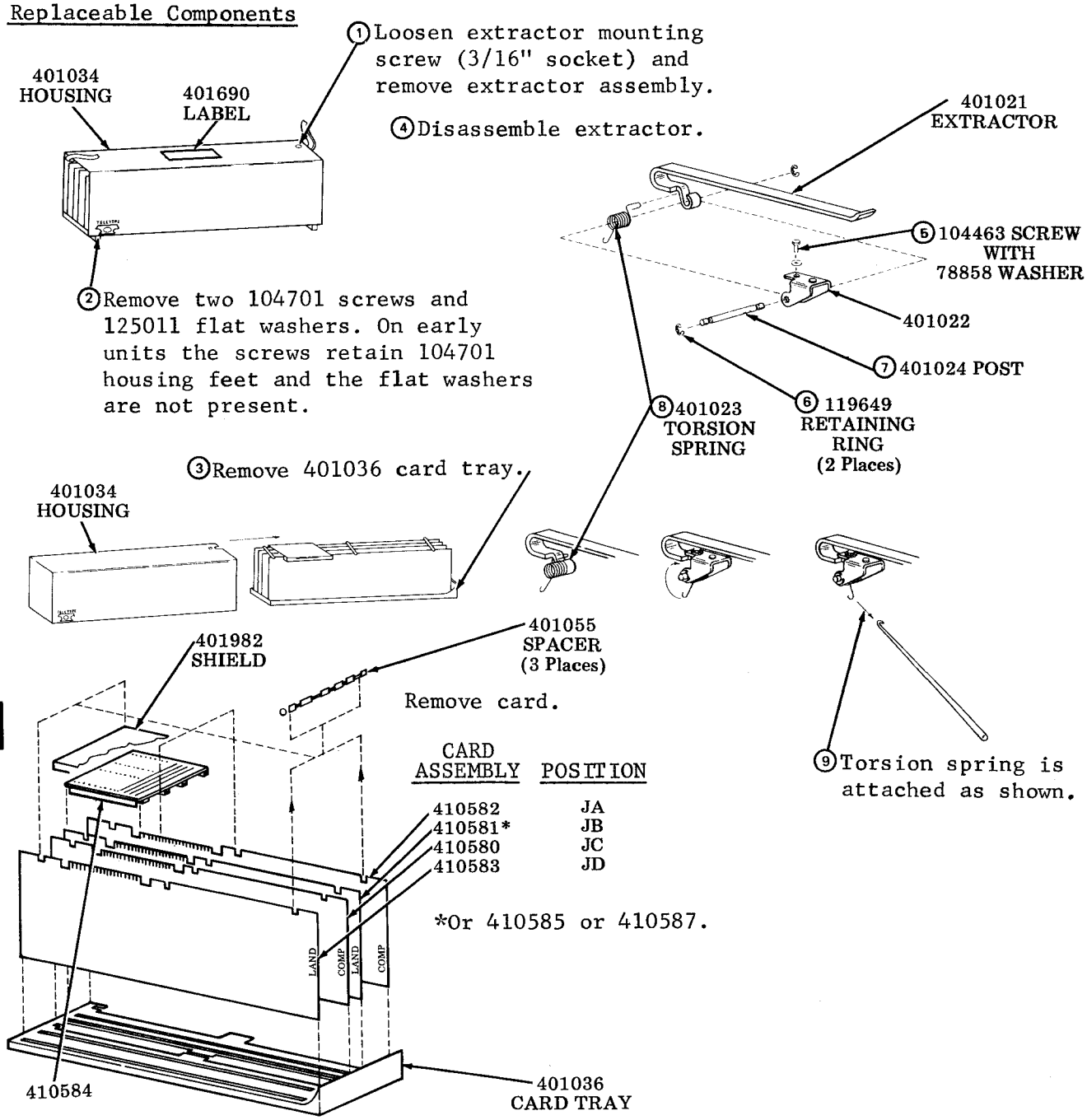

CARD ASSEMBLY	POSITION
410582	JA
410581*	JB
410580	JC
410583	JD

*Or 410585 or 410587.

*The 410581 (no longer manufactured) and 410585 card assemblies are interchangeable and are used in 40C103/AD. The 410587 card assembly is used in 40C103/AE.

NOTE:
- Issue 1 through 4A of 410580 are compatible only with Issue 1 of 410584.
- Issue 5A and later of 410580 are compatible only with Issue 2A and later of 410584.
- Issue 3A and later of 410587 are compatible only with Issue 3A and later of 410584.

6. PARTS -- 40C303AA/001 ROP CONTROLLER

Replaceable Components

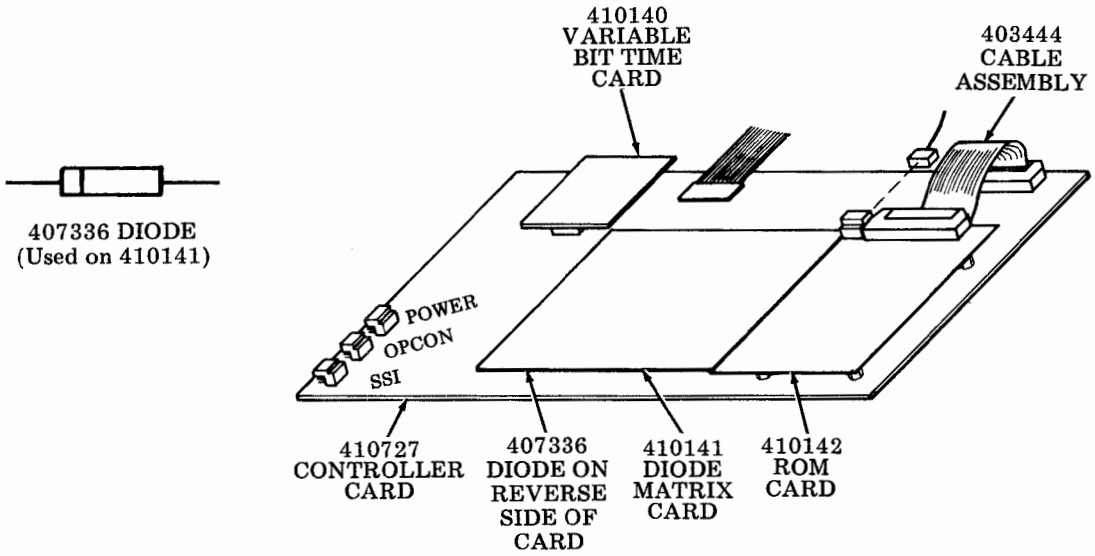

40C303AA/001 Controller

Associated Cable Components

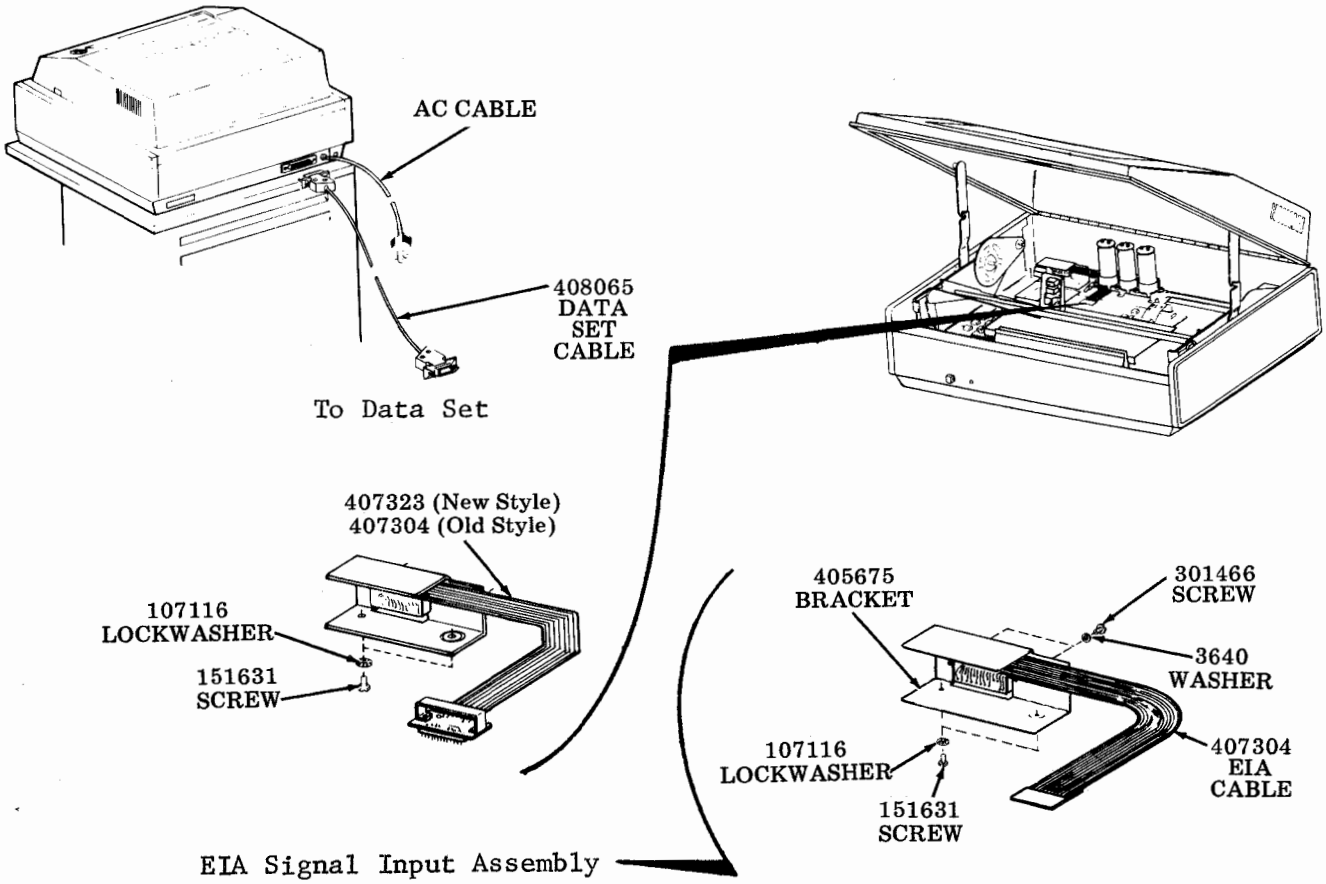

F. DISASSEMBLY/REASSEMBLY AND PARTS (Cont)

6. PARTS -- 40C303AA/001 ROP CONTROLLER (Cont)

Cable Components

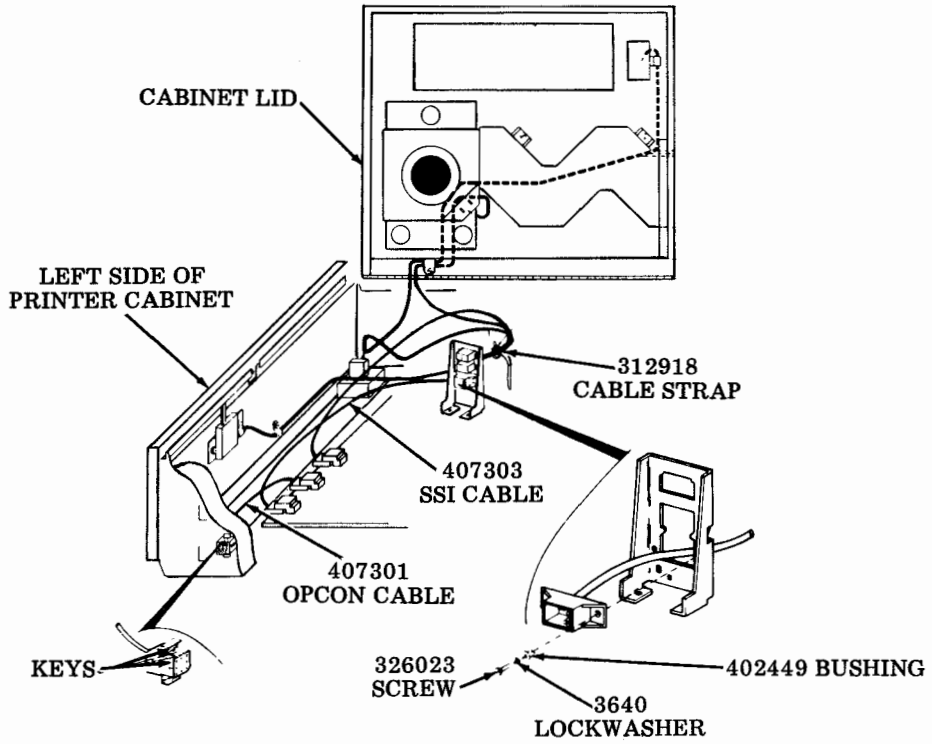

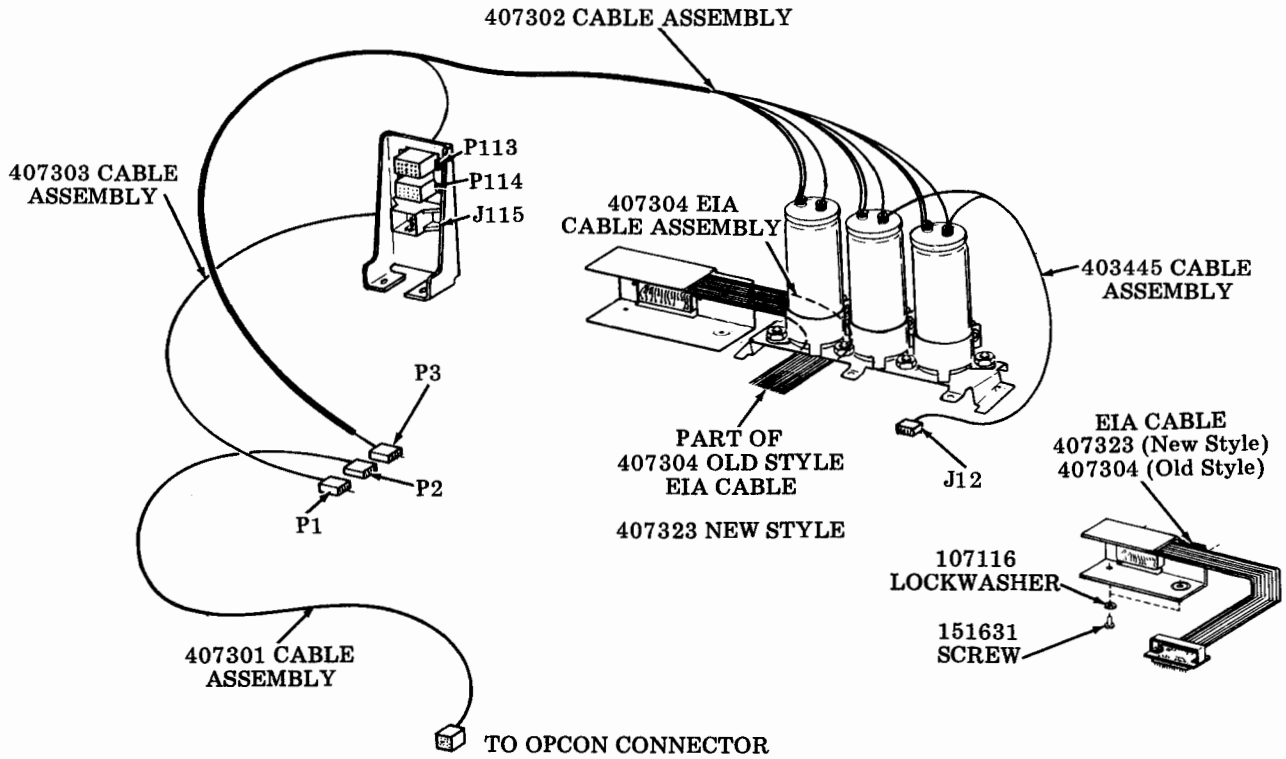

7. PARTS -- 40C303AC/003 OR 40C303AD/-- ROP CONTROLLER

Replaceable Components

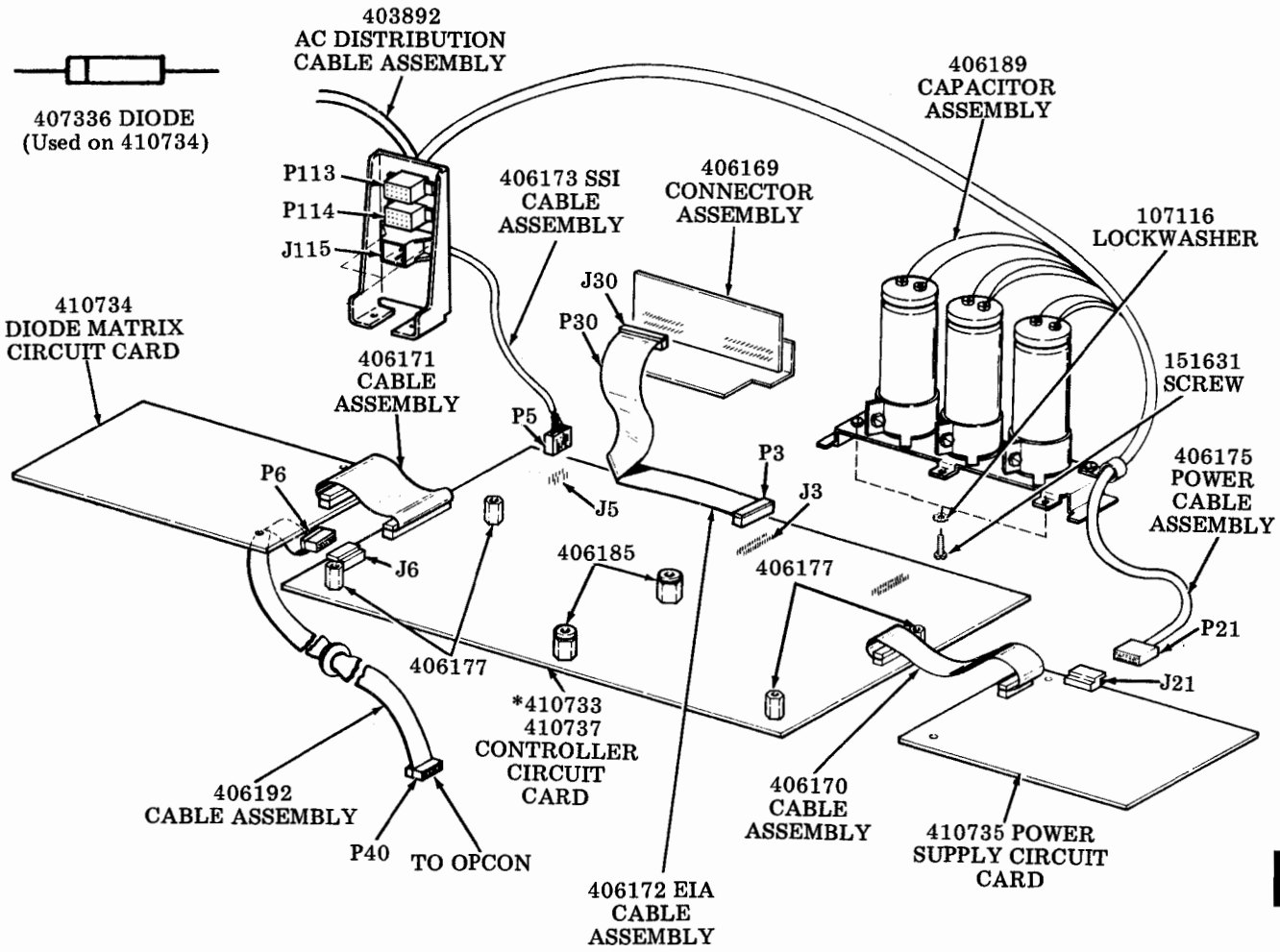

Associated Cable Components

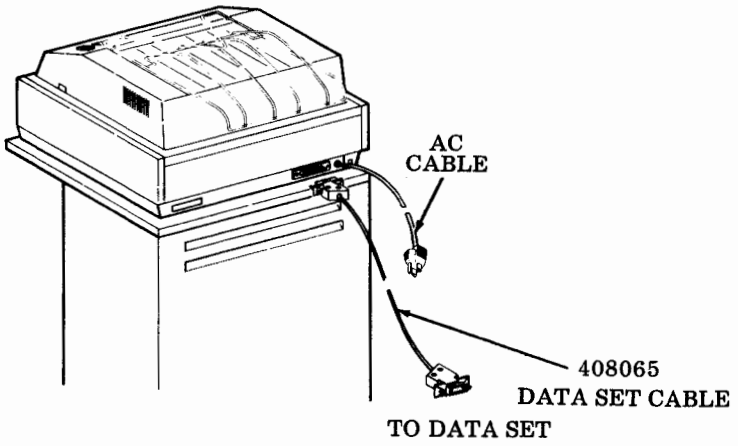

*410733 for 40C303AC/003
410737 for 40C303AD/--

F. DISASSEMBLY/REASSEMBLY AND PARTS (Cont)

7. PARTS -- 40C303AC/003 OR 40C303AD/-- ROP CONTROLLER (Cont)

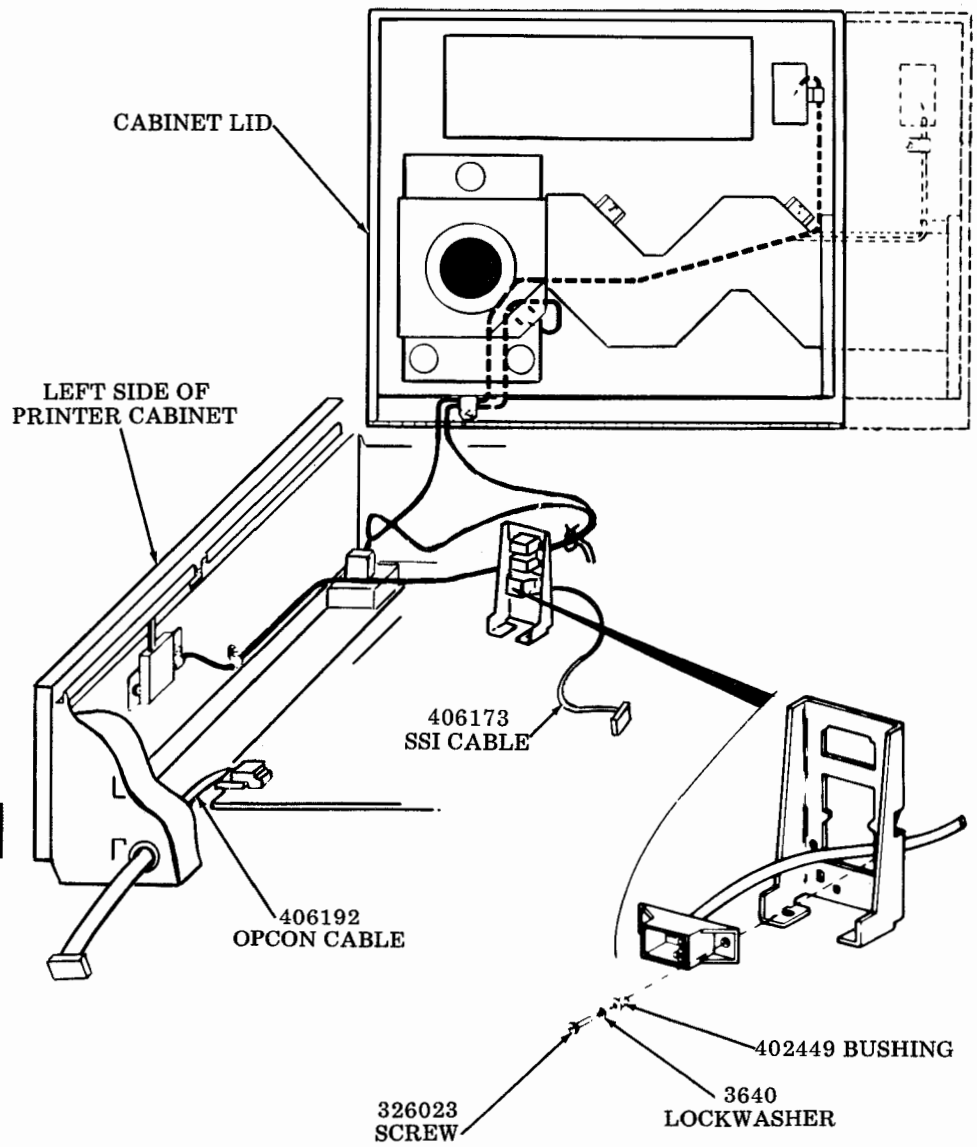

8. PARTS INDEX -- 40C103 AND 40C303 CONTROLLERS

PART NO.	DESCRIPTION AND PAGE NO.
3640	Lockwasher 105, 106, 108
78858	Washer, flat 104
104463	Screw, 4-40 x 1/4 hex 104
104701	Screw, 4-40 x 9-32 fil 104
107116	Lockwasher 105, 106, 107
119649	Ring, retaining 104
125011	Washer, flat 104
151631	Screw, 6-40 x 5/16 hex 105, 106, 107
301466	Screw, 4-40 spl 105
312918	Strap 106
326023	Screw, 4-40 x 9/32 hex 106, 108
346392	Strap, static discharge 99
401021	Extractor 104
401022	Bracket 104
401023	Spring 104
401024	Shaft 104
401034	Housing 104
401036	Tray, card 104
401055	Spacer 104
401582	Nut w/lockwasher, 8-32 hex 100
401676	Screw, 8-32 shoulder 99
401688	Screw, 8-32 captive 99
401690	Label 104
401982	Shield 104
402449	Bushing 106, 108
403444	Cable assembly 101, 105
403445	Cable assembly 101, 106
403892	Cable assembly 107
405675	Bracket 105
406169	Connector assembly 107
406170	Cable assembly 103, 107
406171	Cable assembly 103, 107
406172	Cable assembly 103, 107
406173	Cable assembly 103, 107, 108
406175	Cable assembly 103, 107
406177	Post 107
406185	Spacer 107
406189	Capacitor assembly 107
406192	Cable assembly 103, 107, 108
407301	Cable assembly 101, 106
407302	Cable assembly 101, 106
407303	Cable assembly 101, 106
407304	Cable assembly 101, 105, 106
407323	Cable assembly 101, 105, 106
407336	Diode 101, 103, 105, 107
408065	Cable assembly 105, 107
408071	Pliers, cutting 101, 103
410140	Card, circuit 101, 105
410141	Card, circuit 101, 105
410142	Card, circuit 101, 105
410580	Card, circuit 104
410581	Card, circuit 104
410582	Card, circuit 104
410583	Card, circuit 104
410584	Card, circuit 104
410585	Card, circuit 104
410587	Card, circuit 104
410727	Card, circuit 100, 101, 105
410733	Card, circuit 103, 107
410734	Card, circuit 103, 107
410735	Card, circuit 103, 107
410737	Card, circuit 103, 107

PART 8 -- 9140 STATION CONTROLLER

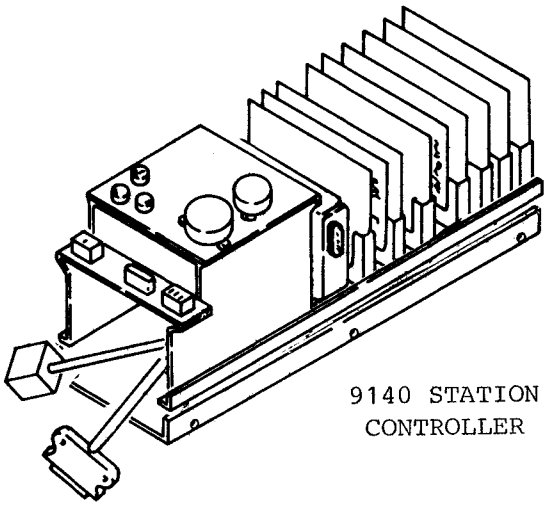

INDEX PAGE

A. GENERAL
1. DESCRIPTION 2
2. TOOLS 15

B. SHOP PROCEDURES
1. GENERAL 15
2. CLEANING AND REFINISHING 15
3. INSPECTION 16
4. CONVERSIONS 16
5. PACKING FOR SHIPMENT OR STORAGE 16

C. TESTING
1. GENERAL 17
2. FUNCTIONAL TESTS 18
3. 9140 STATION CONTROLLER RESPONSES AND CONTROL FUNCTIONS 18

D. TROUBLESHOOTING
1. GENERAL 20
2. 9140 STATION CONTROLLER TROUBLESHOOTING GUIDE 20
3. IRS ANALYSIS 45

E. ADJUSTMENTS AND LUBRICATION 48

F. DISASSEMBLY/REASSEMBLY AND PARTS
1. GENERAL 48
2. CARD REMOVAL -- 9140 STATION CONTROLLER 49
3. DISASSEMBLY/REASSEMBLY 49
4. PARTS -- 9140 STATION CONTROLLER 54

PART 8 -- 9140 STATION CONTROLLER

A. GENERAL

1. DESCRIPTION

This section covers the shop repair actions to be followed for the 9140 YH, YJ, YK and YL Station Controllers, as used in Model 40 Stations. Hereafter, unless otherwise specified the 9140 YH, YJ, YK and YL Station Controllers will be referred to as 9140 Station Controllers. The scope of the repair activity covered in this shop manual is limited to replacement of circuit cards, wired frame and components of wired frame or the 9140 Station Controller. Circuit card repair is not covered. More in depth circuit card analysis can be achieved through use of the wiring diagram package WDP0138 available from Teletype Corporation.

NOTE: When ordering replaceable components, unless otherwise specified, prefix each part number with the letters "TP" (ie, TP410055).

9140 Station Controllers

The above 9140 Station Controllers have seven circuit card connectors mounted on an open metal plate with a heatsink assembly attached to one side. The controller when used in the Model 40 Terminal is always accompanied by the 345605 mounting frame/power supply assembly. The Individual Receiver Selection (IRS) modification kit (when used) is also accompanied by the 345605 mounting frame/power supply assembly.

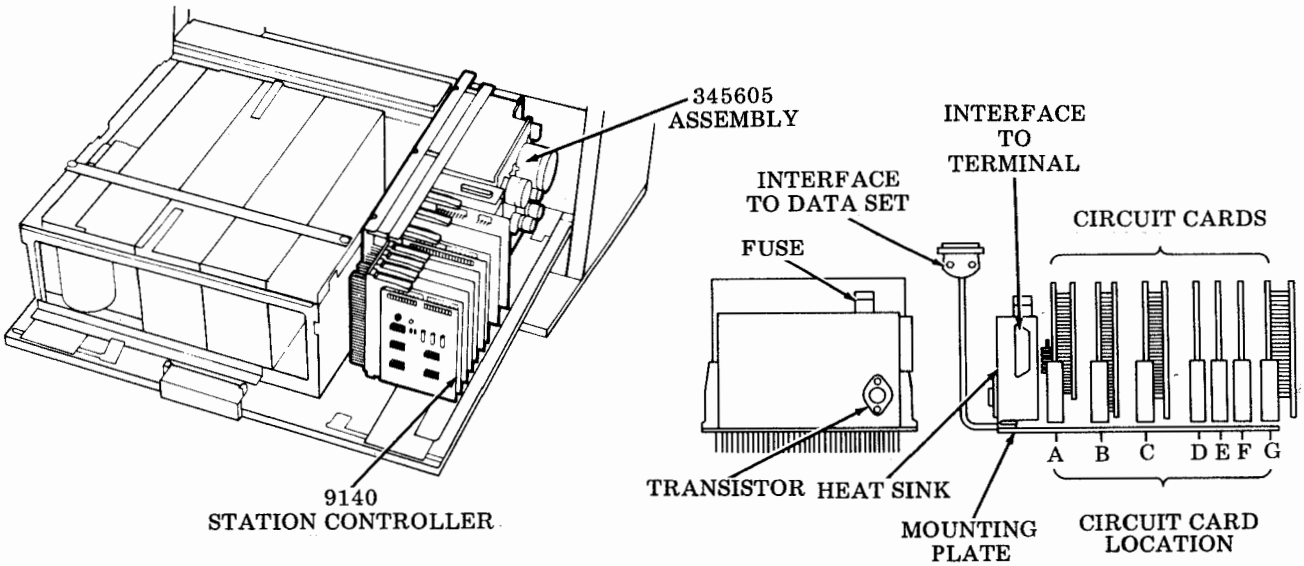

The circuit cards in the 9140 Station Controller are located in card connectors bearing the same letter designation as the initial letter designation on the circuit card. Card D1 is therefore located in the "D" card connector. A circuit card with a hyphen (-) in its designation is mounted piggyback on the card bearing the same letter designation. Card C2-2 is therefore mounted piggyback on Card C2 in the "C" connector.

9140 Station Controller Coded Arrangements

COMPONENTS / 9140 Station Controller Unit Codes	328812 Mounting Plate (7 Connector)	322010 "A" CDC Detector	322011 "B" R/T Distributor	322411 "B1" Vertical Parity	322013 "C2" RO Control Logic	322442 "C2-2" A/B And Motor Control	322014 "D1" S/R Logic	322451 "E2" EIA Interface	322017 "F1" Buffer	322018 "F2" Buffer and Substitute Char.	322685 "A2" CDC Detector
9140/YH	X	X	X	X	X	X	X	X	X		
9140/YJ	X	X	X	X	X	X	X	X		X	
9140/YK	X		X	X	X	X	X	X	X		X
9140/YL	X		X	X	X	X	X	X		X	X

Optional Additions Ordered Separately

322409 "A-1" Third CDC	303734 "D2" ROP Logic
X	X
X	X
X	X
X	X

X - Indicates cards provided in respective coded arrangement

One of the following timer cards must be ordered separately to make unit functional.

A-3C	303805	1050 WPM TIMER
A-3E	303839	1200 WPM TIMER
A-3F	303863	1800 WPM TIMER
A-3G	303864	2400 WPM TIMER

NOTE: Timer cards 303805 and 303839 are used with the 322010 "A" circuit card only. Timer cards 303863 and 303864 are used with the 322685 "A2" circuit card only.

This card must be ordered separately for Model 40 9140 Station Controller applications.

G3	322083	Channel Control Store and Forward

A. GENERAL (Cont)

1. DESCRIPTION, 9140 Station Controllers (Cont)

The following chart provides a list of circuit card designations, circuit card location within the 9140, part number of card and circuit card function. A circuit card with a hyphen (-) in its designation is mounted piggyback on the card bearing the same letter designation.

CIRCUIT CARDS	CIRCUIT CARD LOCATION	PART NO.	FUNCTION
A or A2	A	322010 322685	CDC Detector CDC Detector — 1800 and 2400 Baud Timer
† A-1	Mounted on Card A	322409	Third CDC Detector
A-3C or A-3E or ‡ A-3G A-3F	Mounted on Card A Mounted on Card A2	303805 or 303839 or 303864 303863	1050 Baud Timer 1200 Baud Timer 2400 Baud Timer 1800 Baud Timer
B	B	322011	R/T Distributor
B-1	Mounted on Card B	322411	Parity Error Detection
C2	C	322013	REC Control Logic
C2-2	Mounted on Card C2	322442	A/B and Motor Control (Selected)
D1 or D2	D	322014 303734	Send/Receive Logic Receive Only Logic
E2	E	322451	EIA Interface
F1 or F2	F	322017 322018	Character Recognition Substitute Character
G3	G	322083	Channel Control Store and Forward
*MC641 or ‡MC642	Mounted on Card G3	322641 322642	Alarm/Parity Error Response 2400 Baud, Isochronous, Parity Detect and Alarm
R	Under Heat Sink	303808	Voltage Regulator

* Part of 345625 alarm modification kit which is optional. The other parts of 345625 modification kit are the 345626 alarm assembly and mounting hardware.
† 322409 third CDC circuit card assembly which is optional.
‡ 402326 modification kit updates a 9140 Station Controller to operate at 2400 baud isochronous operation with a parity detect and alarm feature.

Private Line Selective Calling Station Arrangements use Electronics Industries Association (EIA) Standard RS-232-C Interface between the Model 40 Terminal, 9140 Station Controllers, and data set. In this application the Model 40 interfaces with the 9140 Station Controllers, which in turn interfaces with a data set used in a private line network. A two- or four-wire tip and ring telephone connection then forms the station interface with the line.

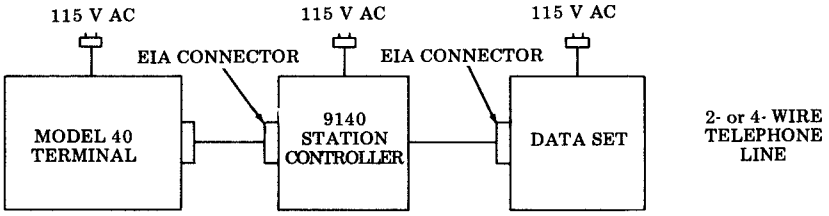

9140 Station Controller Options

Options on the 9140 Station Controller circuit cards are activated by straps on the cards that are either cut or left closed. New 9140 Station Controller circuit cards are provided with all straps closed.

Activating Procedure for Options

a. Turn off all power to the station.
b. Locate the circuit card in the 9140 that contains the option to be activated. For example, see below.
c. Remove circuit card, see Section F, Disassembly/Reassembly and Parts.
d. Locate the proper option strap and activate as required.

NOTE: If the wrong option strap is cut in error, the cut strap may be closed and (very carefully) soldered back together.

e. Return the circuit card to its proper location.
f. Turn on station power.
g. Perform a checkout of the station to verify proper operation of the option.

OPTION NO. — OPTION CONDITIONS — OPTION DEFINITION — LOCATION OF CIRCUIT CARD — LOCATION OF STRAP ON CARD

2.			Circuit Card D1 Strap 52
a.			○
b.			●

● Indicates strap closed.
○ Indicates strap open.

CAUTION: WHEN CUTTING STRAPS, BE SURE THE CUT ENDS OF THE STRAP ARE BENT IN A MANNER THAT PREVENTS SHORTING THEM TO ADJACENT STRAPS OR LANDS ON THE CIRCUIT CARD.

Options 1.a. through 1.d. and 1.q. each require 8 levels of a character to be coded into the straps corresponding to the proper levels. The ASCII (American National Standard Code for Information Interchange) chart shows the mark and space condition of the bits for each ASCII character. Even parity (an even number of marking straps cut) must be used. Options 1.e. through 1.p. each require 7 levels to be coded.

A. GENERAL (Cont)

1. DESCRIPTION, 9140 Station Controller Options (Cont)

The following illustrations show the physical layout of the straps for activating the CDCs, TSCs, and some of the other Station Controller options.

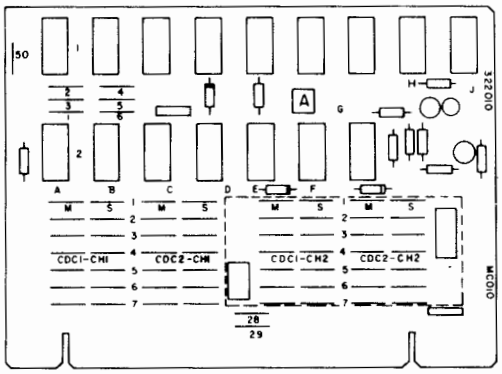

322010 - CDC Activating -- Card A
- Card Position A

322685 - CDC Detector -- Card A2
- Card Position A

NOTE: This card is required for 1800 or 2400 Baud Operation. Options are the same as Card A - 322010.

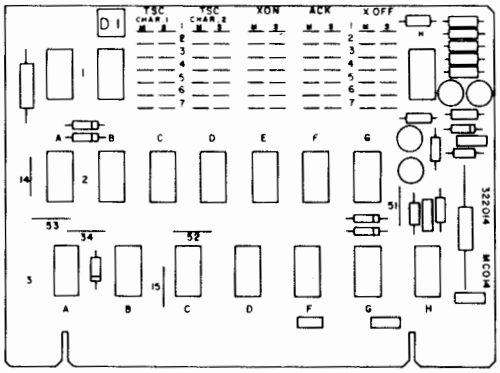

322014 - TSC and Miscellaneous Activating -- Card D1
- Card Position D

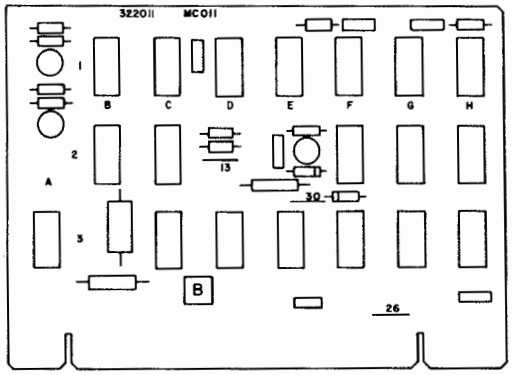

322011 - R/T Distributor -- Card B
- Card Position B

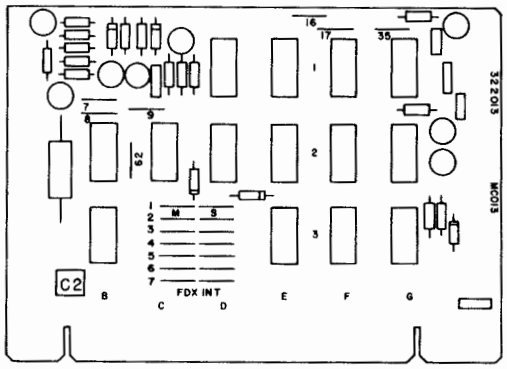

322013 - Receive Control Logic -- Card C2
- Card Position C

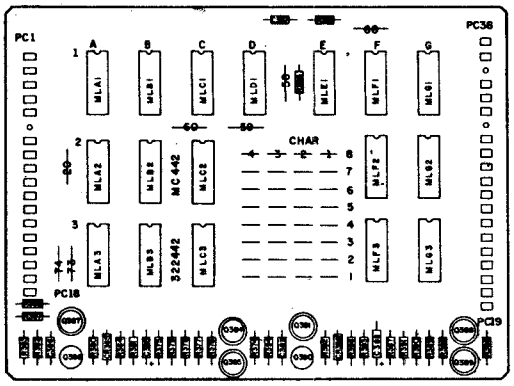

322442 - A/B and Motor Control -- Card C2-2
- Card Position-Piggyback to C2

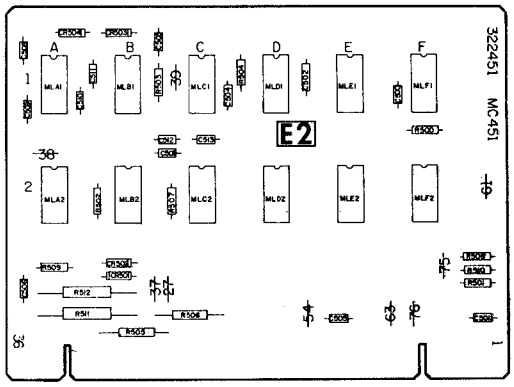

322451 - EIA Interface -- Card E2
- Card Position E

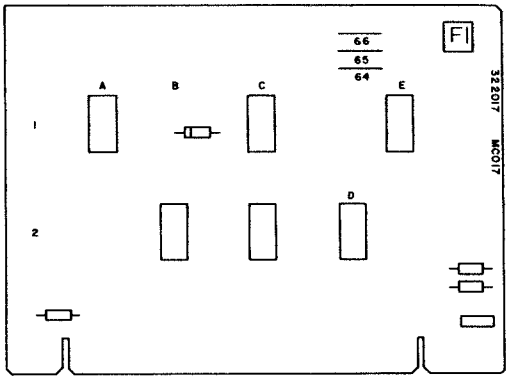

322017 - Character Recognition -- Card F1
- Card Position F

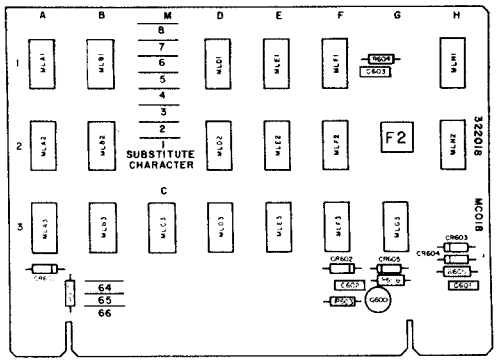

322018 - Substitute Character -- Card F2
- Card Position F

NOTE: The F2 card is ordered separately and is not required unless a substitute character other than "SB" is desired for KD or other than font ID character for printer.

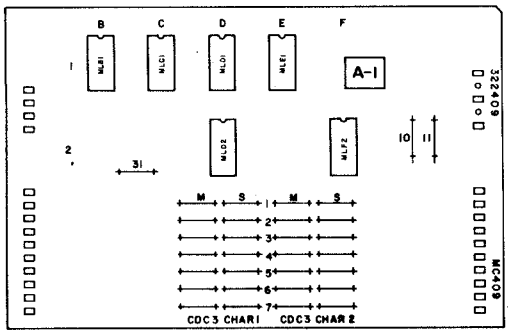

322409 - 3rd CDC Detector -- Card A-1
- Card Position and Piggyback to A

NOTE: Card A-1 is not present on all stations. This is an optional card assembly that is ordered separately.

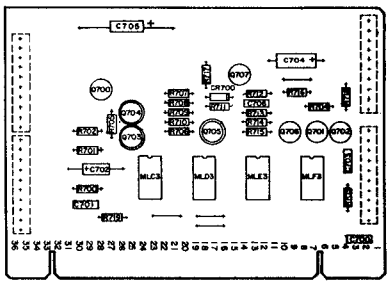

322083 - Channel Control -- Card G3
- Card Position G

A. GENERAL (Cont)

1. DESCRIPTION, 9140 Station Controller Options (Cont)

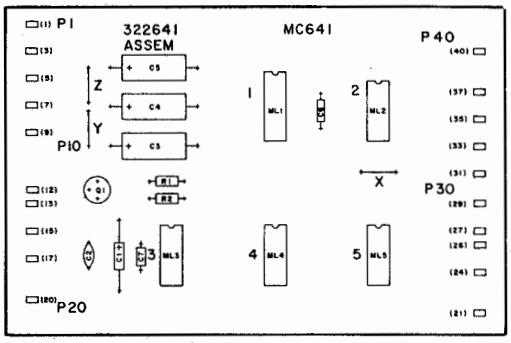

322641 - Answerback and Alarm
- Card Position-Piggyback to G3
Part of Alarm/Parity Error Response Modification Kit (345625)

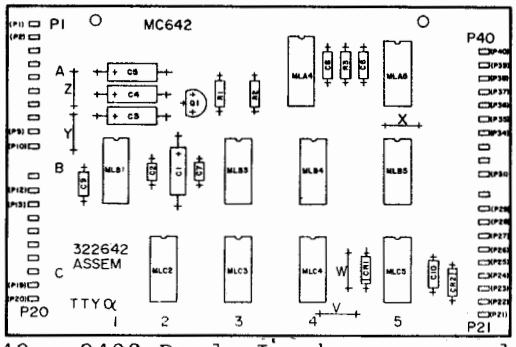

322642 - 2400 Baud, Isochronous, and Parity Detect and Alarm
- Card Position-Piggyback to G3
Part of Modification Kit (402326)

ASCII Code

BITS 4	3	2	1	7	6	5	0	1	0	1	0	1	0	1
					0		0		1		0		1	
0	0	0	0				NUL	DLE	SP	0	@	P	`	p
			1				SOH	DC1	!	1	A	Q	a	q
		1	0				STX	DC2	"	2	B	R	b	r
			1				ETX	DC3	#	3	C	S	c	s
	1	0	0				EOT	DC4	$	4	D	T	d	t
			1				ENQ	NAK	%	5	E	U	e	u
		1	0				ACK	SYN	&	6	F	V	f	v
			1				BEL	ETB	'	7	G	W	g	w
1	0	0	0				BS	CAN	(	8	H	X	h	x
			1				HT	EM	)	9	I	Y	i	y
		1	0				LF	SUB	*	:	J	Z	j	z
			1				VT	ESC	+	;	K	[	k	{
	1	0	0				FF	FS	,	<	L	\	l	|
			1				CR	GS	-	=	M	]	m	}
		1	1				SO	RS	.	>	N	^	n	~
			1				SI	US	/	?	O	—	o	DEL

NOTE: Shaded boxes indicate characters with bit 8 "1" for even parity.

Example: Bits 1 through 7 of the bit permutation for the character M are 1011001, respectively.

1 = Mark 0 = Space

NUL -- Null
SOH -- Start of Heading
STX -- Start of Text
ETX -- End of Text
EOT -- End of Transmission
ENQ -- Enquiry
ACK -- Acknowledge
BEL -- Bell
BS -- Back Space
HT -- Horizontal Tab
NL -- New Line
VT -- Vertical Tab
FF -- Form Feed
CR -- Carriage Return
SO -- Shift-Out
SI -- Shift-In
DLE -- Data Link Escape

DC1 -- Device Control 1
DC2 -- Device Control 2
DC3 -- Device Control 3
DC4 -- Device Control 4
NAK -- Negative Acknowledge
SYN -- Synchronous
ETB -- End of Transmission Block
CAN -- Cancel
EM -- End of Media
SUB -- Substitute
ESC -- Escape
FS -- Field Separator
GS -- Group Separator
RS -- Record Separator
US -- Unit Separator
SP -- Space
DEL -- Delete

1.	Variable Characters	Circuit Card	Coding Instructions
a.	Answer-Back Character 1	C2-2	Cut straps corresponding to marking levels. Close straps corresponding to spacing levels.
b.	Answer-Back Character 2	C2-2	
c.	Answer-Back Character 3 (Optional AB)	C2-2	
d.	Answer-Back Character 4 (Negative AB)	C2-2	
e.	Transmitter-On (X-ON)	D1	Cut straps labeled "M" for levels that are marking. Cut straps labeled "S" for levels that are spacing. Every level must have one strap cut. NOTE 1: Card A-1 ordered separately. Not required if CDC3 is not required. NOTE 2: Card F2 ordered separately. Not required unless substitute character other than "S_B" is desired for KD or other than font I.D. character for printer.
f.	Transmitter-Off (X-OFF)	D1	
g.	Acknowledge (ACK)	D1	
h.	FDX Interrupt	C2	
i.	Transmitter Start Code (TSC) Character 1	D1	
j.	Transmitter Start Code (TSC) Character 2	D1	
k.	Call Directing Code (CDC) 1, Character 1	A	
l.	Call Directing Code (CDC) 1, Character 2	A	
m.	Call Directing Code (CDC) 2, Character 1	A	
n.	Call Directing Code (CDC) 2, Character 2	A	
o.	Call Directing Code (CDC) 3, Character 1	A-1	
p.	Call Directing Code (CDC) 3, Character 2	A-1	
q.	Substitute Character	F2	

2.	Number of Characters in TSC	Circuit Card D1 Strap 52
a.	Two Characters	○
b.	Two Characters Followed by Delete	●

3.	Unit Code of Answer-Back Characters Sent	Circuit Card B Strap 13
a.	10-Unit Code	○
b.	11-Unit Code	●

4.	Unit Code of Characters Sent	Circuit Card A Strap 50
a.	10-Unit Code	●
b.	11-Unit Code	○

● Indicates strap closed.
○ Indicates strap open.

A. GENERAL (Cont)

1. DESCRIPTION, 9140 Station Controller Options (Cont)

		Circuit Card B
5.	Code Level of Characters Sent	Strap 30
a.	8-Unit Code	●
b.	7-Unit Code or Less	O

6.	HDX or FDX Sending (See Note 1 Below Option 8.)	Card D1			Card E2			
		Straps	14	53	27	37	54	63
a.	Stop on "SENT" Interrupt and EOT, Requires Option 8.b.		O	O	—	—	—	O
b.	No Stopping of Sender		O	●	—	—	—	O
c.	Not Used in 40/3 Applications		—	—	—	—	—	—
d.	Not Used in 40/3 Applications		—	—	—	—	—	—
e.	Not Used in 40/3 Applications		—	—	—	—	—	—
f.	Not Used in 40/3 Applications		—	—	—	—	—	—

7.	Local Copy on ROP of KD Send Data (KD&ROP Arrangements)	Circuit Card D1 Strap 15
a.	Local Copy (Can Be Used for KD&ROP)	O
b.	No Local Copy (May be Overridden by Option 13) (Choose for Other Arrangements or KD&ROP, if Desired)	●

8.	Regeneration of Sent Data (Requirements of Option 6.c. — 6.f. Override Option 8)	Card B		Card E2		
		Straps	26	27	37	54
a.	No Regeneration (See Note 2 Below)		O	O	●	O
b.	Regeneration		●	●	O	●

NOTE 1: If Option 9.a. is selected, Option 6.a. must be selected. Straps 53 and 34 must not both be closed with straps.

NOTE 2: Strap 37 must be open in ROP application; do not install Option 8.a.

— Condition of strap does not affect this option.
● Indicates strap closed.
O Indicates strap open.

9.	Interrupt Feature (See Notes Below Option 8.)	Card C2		Card D1
		Straps -	62	34
a.	Stop on Interrupt Character and Blind Receive Data, Start on STX (See Note 1 Below Option 8.)		●	●
b.	Does Not Stop on Interrupt Character		O	O

10.	Function of EOT Sent by Terminal	Circuit Card D1
		Strap 51
a.	EOT Deselects 9140 Sender	●
b.	EOT Does Not Deselect Sender	O

NOTE 1: If Option 10.a. of 9140 Station Controller is selected, Option 8.e. of Model 40 Terminal should also be selected.

NOTE 2: The ROP Logic Card (D2) 303734 has no options.

11.	Delay in Turning Off Carrier	Circuit Card G3				
		Straps -	69	70	71	72
a.	Retain Until Last Character Is Sent		●	●	O	●
b.	Retain for One Character After Interrupt		●	O	●	O
c.	Retain for Three Characters After Interrupt		O	O	●	O

12.	1st or 2nd A/B Character Restarts Sender, or Sender Does Not Stop for A/B at All	Circuit Card C2-2			
		Straps -	58	59	60
a.	2nd Character (If Option 6.c., 6.d., 6.e., or 6.f. Must be Used)		O	●	O
b.	1st Character (If Option 6.c., 6.d., 6e., or 6.f. Is Used) or Does Not Stop (If Option 6.a. or 6.b. Is Used) Should not be used in 40/3 Applications		●	O	●

13.	Local ROP Copy of KD Send Data Provided/Not Provided by 9140	Circuit Card E2		
		Straps -	75	76
a.	Copy All Sent Data and CPU Responses		●	●
b.	Copy Sent Data Only After STX is Sent		O	O

NOTE: Local KDP printer or KD-ROP printer copy will be provided regardless of the status of Option 7. or 13., provided PRINT ON LINE key is lighted and Model 40 Option 29.a. is chosen.

14.	Number of Characters in CDC1 (Exclusive of Delete, if Used)	Circuit Card A			
		Straps -	1	2	3
a.	One Character CDC		●	O	●
b.	Two Character CDC		O	●	●

● Indicates strap closed.
O Indicates strap open.

A. GENERAL (Cont)

1. DESCRIPTION, 9140 Station Controller Options (Cont)

15.	Number of Characters in CDC2 (Exclusive of Delete, if Used)	Circuit Card A			
		Straps -	4	5	6
a.	One Character CDC		●	○	●
b.	Two Character CDC		○	●	●
c.	No CDC2 (See Note.)		○	○	○

NOTE: If no CDC2 is used, select the CDC2 characters (Options 1.m. and 1.n.) identical to CDC1 (Options 1.k. and 1.l.) and install Option 15.c.

16.	Number of Characters in CDC3 (Exclusive of Delete, if Used)	Circuit Card A-1		
		Straps -	10	11
a.	One Character CDC		●	○
b.	Two Character CDC		○	●
c.	No CDC3	Remove Card A-1		

NOTE: Card A-1 not present on all stations; This is an optional card assembly that is ordered separately.

17.	Answer-Back Generated for CDCs	Circuit Card C2				
		Straps -	7	8	9	35
a.	Answer-Back to CDC1 (No Delete After CDC)		–	–	●	○
b.	Answer-Back to CDC1 After Delete		–	–	●	●
c.	No Answer-Back to CDC1		–	–	○	–
d.	Answer-Back to CDC2 (No Delete After CDC)		●	–	–	○
e.	Answer-Back to CDC2 After Delete		●	–	–	●
f.	No Answer-Back to CDC2		○	–	–	–
g.	Answer-Back to CDC3 (No Delete After CDC)		–	●	–	○
h.	Answer-Back to CDC3 After Delete		–	●	–	●
i.	No Answer-Back to CDC3		–	○	–	–

18.	Type of Answer-Back to TSC	Circuit Card C2-2
		Strap 20
a.	Same as Ready-to-Receive to a CDC Only When DTR is On	○
b.	Same as Ready-to-Receive to a CDC (Independent of DTR)	●

19.	Answer-Back to CDC (Observe That, for Example, Option 17.c. Can Override Option 19.a. or 19.b.)	Card A			Card A-1
		Straps -	28	29	31
a.	Answer-Back CDC1 Always		○	–	–
b.	Answer-Back to CDC1 Only When Ready-to-Receive		●	–	–
c.	Answer-Back to CDC2 Always		–	○	–

– Condition of strap does not affect this option.
● Indicates strap closed.
○ Indicates strap open.

19.	Answer-Back to CDC (Observe That, for Example, Option 17.c. Can Override Option 19.a. or 19.b.) (Cont)	Card A			Card A-1
		Straps -	28	29	31
d.	Answer-Back to CDC2 Only When Ready-to-Receive		—	●	—
e.	Answer-Back to CDC3 Always		—	—	O
f.	Answer-Back to CDC3 When Ready-to-Receive		—	—	●

NOTE: Option 19.a., 19.c., and 19.e. are recommended.

20.	Optional Answer-Back to CDC or TSC (See Note Below.)	Circuit Card C2-2		
		Straps -	73	74
a.	Optional Negative Answer-Back		●	O
b.	Optional Positive Answer-Back (CDC Only)		O	●
c.	No Optional Answer-Back		O	O
d.	Optional Positive and Negative Answer-Back Should not be used in 40/3 Applications		●	●

NOTE: If Option 20.d. is selected "send mode response" required, then a 197464 diode must be present between XZC-A5 and XZD-A16 (blocking toward XZD-A16).

XZC-A5 >—▷|—< XZD-A16

21.	Response Delay for Motor Start-Up	Circuit Card C2-2 Strap 68
a.	Nominal 2-Second Delay	O
b.	Nominal 200-Millisecond Delay	●

22.	Received Vertical Parity Error Response	Circuit Card C2 Strap 16
a.	Odd Parity Causes Line Break (See Note)	●
b.	Odd Parity Does Not Cause Line Break	O

23.	Loss of DTR Response (Data Terminal Ready)	Circuit Card C2 Strap 17
a.	Loss of DTR Causes Line Break (See Note)	●
b.	Loss of DTR Does Not Cause Line Break	O

24.	Type of F Card Used in 9140	Circuit Card E2 Strap 61
a.	F1 Circuit Card - Without 9140 Substitute Character	●
b.	F2 Circuit Card - Without 9140 Substitute Character	O

—Condition of strap does not affect this option.
● Indicates strap closed.
O Indicates strap open.

NOTE: Option 22.a. and 23.a. will turn the "alarm lead" on and the set will react when option 31 on the 410771 card is optioned. See Controller Logic section 6 in 352 Shop Manual.

A. GENERAL (Cont)

1. DESCRIPTION, 9140 Station Controller Options (Cont)

25.	9140YH and YK Recognition of SOH and ETX	Circuit Card F1			
		Straps -	64	65	66
a.	SOH Only (Requires Local Engineering)		●	O	O
b.	ETX Only (Action of ETX Requires Local Engineering) (Requires Local Engineering)		O	●	O
c.	Both SOH and ETX (Requires Local Engineering)		O	O	O
d.	Neither SOH nor ETX (Recommended)		O	O	●

NOTE 1: Option 25 choice has no effect on selection of ETX as interrupt character.

26.	Data Set Interface	Circuit Card E2		
		Straps -	38	39
a.	Gate Data Set CTS With 9140 Signals		O	—
b.	Do Not Gate Data Set CTS With 9140 Signals		●	—
c.	Gate Data Set DSR With 9140 Signals		—	O
d.	Do Not Gate Data Set DSR With 9140 Signals		—	●

NOTE: Options 26.a. and 26.c. are recommended.

Alarm/Parity Error Response Modification Kit (345625)

27.	Alarm Time and Reset on STX or EOT	Circuit Card 322641			
		Straps -	X	Y	Z
a.	30-Second Alarm (See Note Below.)		—	O	O
b.	60-Second Alarm (See Note Below.)		—	●	O
c.	90-Second Alarm (See Note Below.)		—	●	●
d.	Initialize Optional A/B Circuit on STX or EOT		●	—	—
e.	Initialize Optional A/B Circuit on EOT		O	—	—

NOTE: Audible Alarm sounds on receipt of CDC if station is not ready to receive (DTR off).
Strap 74 on C2-2 card must be closed to use the modification kit.

— Condition of strap does not affect this option.
● Indicates strap closed.
O Indicates strap open.

2. TOOLS

Tools required for servicing this unit are as follows:

Description	Part No.
• Screwdriver 1/4 Inch Blade	100982
• Screwdriver 1/8 Inch Blade	95368
• Nut Driver 1/4 Inch	89954
• Nut Driver 5/16 Inch	89955
• Open-End Wrench 3/16 Inch and 1/4 Inch	129534
• Open-End Wrench 5/16 Inch and 3/8 Inch	152835
• Static Discharge Strap	346392

Suggested tools for servicing are as follows:

Volt-Ohmmeter, capable of doing continuity checks on light cable wiring.

Refer to parts Section 570-005-800TC, Maintenance Tools for additional tools and supplies.

B. SHOP PROCEDURES

1. GENERAL

This section covers the repair shop action for Model 40 9140 Station Controllers taken out-of-service. Details are noted for cleaning and refinishing. Conversion and variation in the 9140 Station Controllers are described. A complete sequence is given for packing the 9140 Controllers.

To determine the repair required, both visual and operational checks are given. A check list or note sheet should be prepared that lists the procedures to be performed and the suspected trouble. Items to be listed are; tests required, area of troubleshooting, disassembly required, components to be replaced and the type of repair required. This type of note sheet is convenient to keep on record for later reference.

2. CLEANING AND REFINISHING

Cleaning

CAUTION: DO NOT USE TANK OR IMMERSION TYPES OF CLEANING PROCESSES (IE, ULTRASONIC OR SOLVENT TANK) ON THE WIRED FRAMES.

Cleaning is to be done by dusting using a soft brush and blow off with an air duster (not to exceed 20 pounds pressure). If installed in a cabinet, open any lids, covers, door or panels that may cover the interior of the electronics package. Look for dust accumulations, lint, ribbon particles, paper dust or foreign materials that may only be visible during servicing. Remove obstructions to ventilation in air ducts, grills, channels, vanes or the areas between the circuit cards.

B. SHOP PROCEDURES (Cont)

2. CLEANING AND REFINISHING (Cont)

Removal of the circuit cards is required when cleaning the wired frames. Use an air duster and brush to dust the wired connector pins. Dust away any particles or loose foreign material.

Refinishing

Since the controllers are mounted inside the pedestal and are not externally visible, refinishing is not necessary.

3. INSPECTION

Visual checks are made to maintain proper set condition and to avoid general disrepair.

- Visually inspect all card connector terminals and insulators for abnormal characteristics -- replace if necessary.
- Visually inspect wire-wrap terminals for bends, shorting conditions, broken wires, etc, -- replace if necessary.
- Visually inspect all connectors, cables, and wire leads for proper termination, no pinched, shorted, broken, or disconnected wires, etc, -- replace if necessary.

4. CONVERSIONS

Conversions

The 9140 Station Controllers can be converted from one code to another by removing or replacing the assoicated circuit card(s). See Coded Arrangements on Page 3.

5. PACKING FOR SHIPMENT OR STORAGE

A repaired 9140 Station Controller may be installed and shipped (or stored) in its appropriate position in the pedestal.

If the 9140 Station Controller is to be packaged for individual shipment or storage, the following packing materials (available from Teletype Corporation) are required: 9785PK Carton, 27708PK Pallet, 28161PK Sleeve, 27711PK Liner, 21690PK Corners, four 28055PK Wood Screws and 27643 Label.

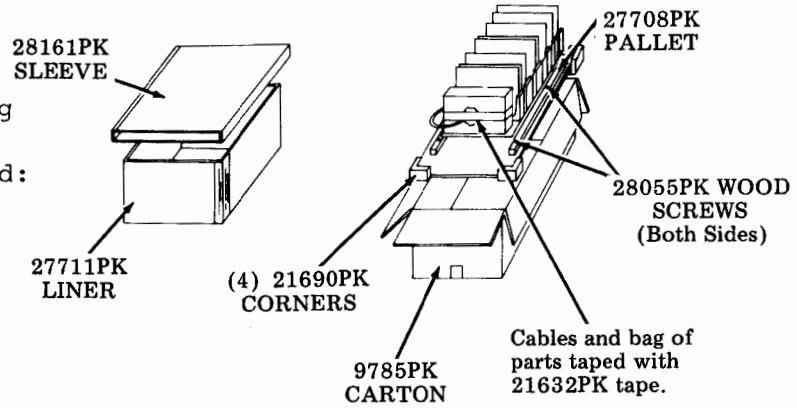

For 345605 mounting frame (9140), the following packing materials (available from Teletype Corporation) are required: 9292PK Carton, 28158PK and 28160PK Packing Details, and 27643 Label.

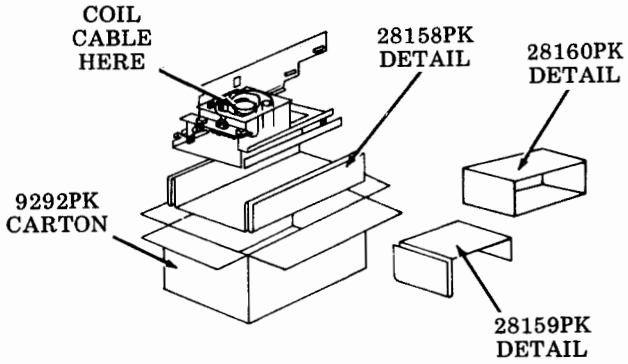

The tab on the assembly must not come in contact with the folds of 28158PK detail.

C. TESTING

1. GENERAL

An operational checkout should be performed on all repaired 9140 Station Controllers. For testing the 9140 Station Controllers it may be necessary to test the completely assembled station using the system processor at its original site. Setup and option the station for normal use and run full messaging to the processor. If send or receive problems are encountered refer to the trouble analysis for corrective procedures.

If there is sufficient repair volume, it may be desirable to make extension cables such that the 9140 Station Controllers can be operated alongside the Model 40 Set without physically installing the controller in the set.

Before starting any tests, check that all cards and cable connectors are fully seated. If a printer is present check that paper and a ribbon are installed. Turn on power switches. Turn up the brightness control for the monitor and the alarm loudness control.

Always perform the steps in the order given. A proper test result is based on all previous steps being satisfactory. If the desired response is not obtained at any step, repeat the step to make sure that the step was performed correctly.

C. TESTING (Cont)

2. FUNCTIONAL TESTS

Before turning on any equipment, check the following:

a. Is station connected to a properly grounded ac service?
b. Are all circuit cards and cable connectors fully seated?
c. Are all cabinet lids and pedestal doors closed?
d. In KDP and ROP, are printer paper and ribbon properly installed?

If operational failure occurs, go directly to Section D. TROUBLESHOOTING and perform the analysis indicated. Note that there are cases where the test results are affected by options, and an alternate result may be the cause of misoptioning.

3. 9140 STATION CONTROLLER RESPONSES AND CONTROL FUNCTIONS

FUNCTION	CHARACTER	DESCRIPTION
TSC (Transmitter Start Code)	Two variable characters, ie, DC3 (or other character) followed by an alpha character (see Note 1).	Station response to polling is as follows: When there is traffic to send, station will respond with message; otherwise, station will give a "no-traffic" answer-back in accordance with Option 18.
CDC (Call Directing Code)	Two variable characters, ie, alpha alpha (see Note 1).	Code sent by system processor indicating it has a message to deliver. After a CDC, system processor monitors line for station answer-back.
AB (Answer-Back)	Two variable characters. *Note:* No traffic answer-back to a TSC depends on Option 18. It will be either A/B1, A/B2 or A/B4, A/B4.	There are four possible A/B responses to a CDC. These are: A/B1, A/B2 — When station is able to receive message (see Note 2). A/B3, A/B3 — (Optional, requires 345625 modification kit) When station has received a parity error in text (see Note 3). A/B4, A/B4 — When station is unable to receive due to being off-line or having low paper (see Note 4). No answer-back — when more than one station is addressed using a common CDC.
Start of Text	STX	This character terminates select or polling mode and causes station (only if selected) to copy transmission.
End of Transmission	EOT	This code character terminates transmission and causes station to become unselected. After an EOT is detected, station monitors for CDCs and TSCs.

FUNCTION	CHARACTER	DESCRIPTION
Delete	DEL	This character is sent by processor after a line break to allow stations to get back in synchronization with signal line. It may be required after a CDC in some systems.
FDX INT (Interrupt Character)	Character used depends on system. It may be NULL.	This is an interrupt code sent by processor to halt and blind selected receivers and conditions stations to monitor for their CDCs and TSCs.

NOTE 1: Some systems require a Delete (DEL) after a CDC or TSC. A DEL should only be used when system requirements make it necessary.

NOTE 2: (Alpha, alpha recommended) -- This answer-back can also be used as a no-traffic response to a TSC.

NOTE 3: (Same character sent twice) -- This answer-back can be used during post message recall to indicate that a parity error was received.

NOTE 4: (Same character sent twice) -- This answer-back can be used as a no-traffic response to a TSC.

Care should be exercised that valid tests are not omitted. Example: If post message recall is used but the option for "reset on STX" is not used; then the steps "Check for initialization of optional AB on STX" should be performed to check that the circuit works as intended.

The 345625 alarm modification kit (an option) provides the ability to initiate the optional answer-back during post message recall procedures. The optional answer-back is initiated during post message recall procedures if a parity error was detected in the test. The audible alarm is activated when the 9140 Station Controller recognizes its CDC but is unable to receive.

The 344555 modification kit provides interconnecting and control facilities in Model 40 Set combination KD/ROP (private line version). The ROP designated as the primary receiver must be equipped with a 345605 mounting frame and power supply. The KD secondary receiver must be equipped with a 345605 mounting frame with power supply, 9140 Station Controller, and 322409 circuit card (3rd code).

One or both of the following optional features may be provided by the 9140 Station Controller.

a. Recognition of a third CDC character sequence with a 322409 circuit card.
b. A programmable substitute character generated by 322018 (F2 card) in 9140 YJ and YL to the Model 40 when the 9140YJ and YL senses an odd parity character from the line.

D. TROUBLESHOOTING

1. GENERAL

The following caution procedures must be observed when troubleshooting.

CAUTION 1: TURN OFF ALL POWER OR SIGNAL SOURCES BEFORE REMOVING OR REPLACING ANY COMPONENT.

CAUTION 2: TO AVOID POSSIBLE INTERNAL DAMAGE TO CIRCUITRY, WEAR A 346392 STATIC DISCHARGE STRAP CONNECTED TO GROUND TO ALLOW STATIC DISCHARGE BEFORE HANDLING CIRCUIT CARDS FOR REMOVAL OR REPLACEMENT. AVOID TOUCHING CIRCUIT LANDS AND CARD COMPONENTS AS MUCH AS POSSIBLE.

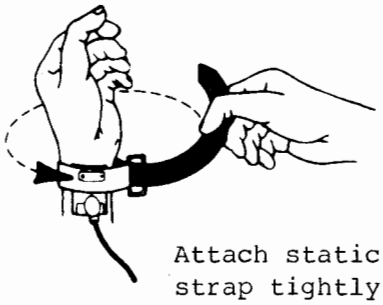

Attach static ground strap tightly to wrist as shown.

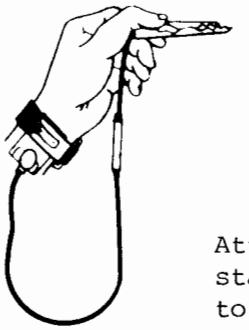

Attach clip end of static discharge strap to frame ground.

The 9140 Station Controller guide is a listing of trouble indications and the recommended corrective action. Types of troubles are grouped -- Trouble Indications 1 through 9 are send problems and Trouble Indications 1 and 10 through 16 are receive problems. Use the troubleshooting guides as follows:

a. Always start with question 1.
b. Answer analysis questions and follow proper response directive to isolate and correct the trouble.
c. Where more than one component is specified for replacement, substitute one at a time in the order specified. The original component shall be replaced if the trouble is not corrected before making the next indicated substitution. When installing a replacement component, make certain that all options (if present) in this component are programmed for proper operation. If replacement of the part or subcomponent indicated does not correct the trouble, replace the next higher order of component (ie, circuit card, wired frame, or entire 9140 Station Controller).

Once the trouble is corrected, repeat the checkout to assure correct performance. Remember, in all trouble analysis, response is directly affected by the options selected. The actual response should always be checked against how the 9140 Station Controller is optioned to respond.

2. 9140 STATION CONTROLLER TROUBLESHOOTING GUIDE

NOTE 1: If symptom is intermittent, be sure to exercise the station long enough to see the problem as you perform the analysis.

NOTE 2: Always turn off power before removing or restoring circuit cards. Be aware that removing or applying power to the 9140 Station Controller or modem can cause hits on the circuit.

NOTE 3: When a new circuit card or modem is substituted in the analysis be sure that options are the same as those in the removed circuit card or modem. If no change in symptom occurs, restore original circuit card or modem to avoid additional problems.

NOTE 4: ROP, KDP (printer under monitor), or KDP & ROP (printer under monitor) station: If required, remove two screws that mount the 9140 Station Controller mounting frame and power supply to pedestal door. This allows the 9140 Station Controller to be moved to gain access to circuit card connector pins.

NOTE 5: When analysis states that an option affects a step, check which option your station has. The analysis assumes in a large part that all 9140 Station Controller options and any modifications are correctly installed.

NOTE 6: The test set referred to in the analysis is the Model 40 Station with 9140 Controller.

NOTE 7: If the 9140 Station Controller circuit cards indicated in the analysis do not solve the problem, replace controller wired frame (328812).

ANALYSIS QUESTION	"YES" RESPONSE DIRECTIVE	"NO" RESPONSE DIRECTIVE
1. Is the test set connected to other stations on the line while troubleshooting this station?	Go to 2. NOTE: If an answer-back problem or misdirected message problem is reported, it might be caused by another station on the line. This procedure will show bad answer-back or misdirected message (if that is the problem), but isolation to faulty station may require disconnecting other stations from the line to the test set.	Go to 2. NOTE: If an answer-back problem or misdirected message problem is reported, it might be caused by another station on the line. This procedure will not show bad answer-back or misdirected message (if that is the problem). If reported symptom is being caused by the station under analysis, however, following this trouble analysis will isolate problem.

D. TROUBLESHOOTING (Cont)

2. 9140 STATION CONTROLLER TROUBLESHOOTING GUIDE (Cont)

ANALYSIS QUESTION	"YES" RESPONSE DIRECTIVE	"NO" RESPONSE DIRECTIVE
2. Station with ROP: IN SERVICE key must be lighted and TRANS START key must not be lighted for this step. Station with KD or KDP: REC key must be lighted for this step. Station with KDP: PRINT ON LINE key must be lighted for this step. All stations: If any of above conditions cannot be met, trouble is in the Model 40 KD (or KDP) or ROP. From test set, send EOT and CDC1. Does test set copy AB? NOTE: If 9140 Station Controller Option 17.b. is installed, then CDC1 is CDC1 character 1, CDC1 character 2, Delete.	Test set copies some character or characters 9140 Station Controller Option 17.a. or 17.b.: Go to 3. 9140 Station Controller Option 17.c.: Replace 322013 circuit card (C2).	9140 Station Controller Option 17.a. or 17.b.: Go to 5. 9140 Station Controller Option 17.c.: Go to 4.
3. Does station modem carrier remain on after AB is sent? (NOTE: RS and CS lamps remain on in Data Set 202T).	Replace 322083 circuit card (G3). Also 322641 card, if used. Replace 322451 circuit card (E2). Replace 322014 circuit card (D1). Replace 322013 circuit card (C2).	Go to 14.

ANALYSIS QUESTION	"YES" RESPONSE DIRECTIVE	"NO" RESPONSE DIRECTIVE
4. From test set, send STX, text, and EOT. Does station copy text? (Text can be a short message.)	From test set, send CDC1. Test set will not copy an AB. Go to 23.	Go to 17.
5. From test set, send STX, text, and EOT. Does station copy text? (Text can be a short message.)	Go to 6.	Go to 9.
6. From test set, send TSC of the station. Does test set copy an AB? NOTE: If 9140 Station Controller Option 2.b. is installed, then TSC is TSC character 1, TSC character 2, Delete.	Replace 322013 circuit card (C2). Replace 322442 circuit card (C2-2).	KD, KDP: Go to 7. ROP: Go to 8.
7. Bypass 9140 Station Controller by following method: Disconnect "9140 Station Controller to data set" cable from modem. Disconnect the 9140X connector interconnect cable from 9140 Station Controller and connect it to modem. In local mode, prepare a short message ending in EOT. Depress HOME and SEND keys. Does test set copy message without error?	Trouble is in 9140 Station Controller. Reconnect 9140 Station Controller and replace 322083 circuit card (G3). Replace 322451 circuit card (E2). Replace 322014 circuit card (D1). Replace 322013 circuit card (C2). Replace 322442 circuit card (C2-2).	Replace modem. Reconnect 9140 Station Controller.

D. TROUBLESHOOTING (Cont)

2. 9140 STATION CONTROLLER TROUBLESHOOTING GUIDE (Cont)

ANALYSIS QUESTION	"YES" RESPONSE DIRECTIVE	"NO" RESPONSE DIRECTIVE
8. Just after TSC is sent from test set, make this measurement. Measure voltage between circuit card connector E, pin A19 and connector E, pin A4. Is the voltage at E-A19 ever approximately +9 V dc (+3 V dc to +25 V dc is acceptable)? In this step a momentary positive deflection of the meter can be considered to be +9 V dc.	Replace modem. Replace 322083 circuit card (G3). Replace 322451 circuit card (E2). Replace 322014 circuit card (D1). Replace 322013 circuit card (C2). Replace 322442 circuit card (C2-2).	Replace 322083 circuit card (G3). Replace 322451 circuit card (E2). Replace 322014 circuit card (D1). Replace 322013 circuit card (C2). Replace 322442 circuit card (C2-2).
9. From test set, send TSC of station. Does test set copy A/B1, A/B2? (A/B1, A/B2 is answer-back character 1 followed by answer-back character 2.)	Go to 10.	Go to 26.
10. From test set, send CDC1. Station still does not AB. From test set, send STX, text, and EOT. Does station copy text?	Replace 322013 circuit card (C2). Replace 322442 circuit card (C2-2).	Go to 11.
11. Measure voltage between circuit card connector A, pin 20 and connector A, pin 4 just after CDC1 is sent from test set. Is A20 approximately +5 V dc?	Go to 12.	Replace 322010 circuit card (A).

ANALYSIS QUESTION	"YES" RESPONSE DIRECTIVE	"NO" RESPONSE DIRECTIVE
12. Does voltage on circuit card connector A, pin 20 (see Step 11) stay at approximately +5 V dc? (Watch only for a minute.)	Replace 322013 circuit card (C2).	Go to 13.
13. Measure voltage between circuit card connector A, pin 10 and connector A, pin 4 just after CDC1 is sent from test set. Is voltage on A10 ever approximately +5 V dc?	Replace 322017 circuit card (F1). Replace 322013 circuit card (C2).	Replace 322013 circuit card (C2). Replace 322010 circuit card (A).
14. Was delay in receiving AB approximately 2 seconds in Step 2?	9140 Station Controller Option 21.a. is installed. Go to 15.	Delay is not noticeable. 9140 Station Controller Option 21.b. is installed. Go to 16.
15. Does customer want 9140 Station Controller Option 21.a.?	Go to 19.	Install strap 68. If AB delay after EOT and CDC1 sent from test set is still 2 seconds, replace 322442 circuit card (C2-2).
16. Does customer want 9140 Station Controller Option 21.b.?	Go to 19.	Cut strap 68. If AB delay after EOT and CDC1 sent from test set is still not 2 seconds, replace 322442 circuit card (C2-2).
17. From test set, send TSC of station. Does test set receive A/B1, A/B2?	Go to 23.	Go to 18.
18. Is any AB copies at test set in Step 17?	Go to 23.	Go to 26.

D. TROUBLESHOOTING (Cont)

2. 9140 STATION CONTROLLER TROUBLESHOOTING GUIDE (Cont)

ANALYSIS QUESTION	"YES" RESPONSE DIRECTIVE	"NO" RESPONSE DIRECTIVE
19. Was A/B1, A/B2 (answer-back character 1 followed by answer-back character 2) copied by test set in Step 2?	Go to 20.	Go to 22.
20. In addition to A/B1, A/B2, was some other character copied by test set in Step 2?	Go to 21.	Go to 23.
21. Was additional character received after A/B1, A/B2?	If option for hard turn-off of the station modem carrier was selected, try some soft turn-off option. If a soft turn-off of station modem carrier was selected, replace modem or try a longer soft turn-off.	Additional character was before A/B1, A/B2. Replace station modem or try a longer squelch or clear-to-send interval at station modem.
22. Was a single character AB like NULL or a not valid two or more character AB like NULL and ACK copies by test set?	Replace 322442 circuit card (C2-2). If trouble remains, check modem squelch. It may be too long (do not use 156 ms squelch).	Go to 34.
23. From test set, send text and STX. Does station copy text? (Text must not contain CDC or TSC of station.)	Replace 322451 circuit card (E2). Replace 322013 circuit card (C2).	Go to 24.
24. From test set, send CDC1. Does test set receive AB? NOTE: Ignore Model 40 response to CDC1.	Replace 322017 circuit card (F1). Replace 322013 circuit card (C2). Replace 322010 circuit card (A).	Go to 25.

ANALYSIS QUESTION	"YES" RESPONSE DIRECTIVE	"NO" RESPONSE DIRECTIVE
25. From test set, send text and EOT. Did station copy text without error?	Go to 43.	Go to 41. (Station copied with error or did not copy at all.)
26. Bypass 9140 Station Controller by removing "9140 Station Controller to data set" cable from modem. Disconnect the 9140X - Connector interconnect cable from 9140 Station Controller and connect it to modem. ROP: IN SERVICE key must be lighted. KD or KDP: REC key must be lighted. Send a short message from the test set. CDC and STX are not required. Does the station copy message without error?	Go to 29. (Trouble is in 9140 Station Controller.)	Go to 27.
27. Is station modem a Bell System 202T modem or equivalent?	Go to 28.	If line is ok, replace modem. If new modem does not pass Step 26, isolate trouble to proper Model 40 component.
28. Does CO lamp light on station 202T modem when test set sends as in Step 26?	Trouble is in modem.	If line is ok, trouble is in modem.

D. TROUBLESHOOTING (Cont)

2. 9140 STATION CONTROLLER TROUBLESHOOTING GUIDE (Cont)

ANALYSIS QUESTION	"YES" RESPONSE DIRECTIVE	"NO" RESPONSE DIRECTIVE
29. Put 9140 Station Controller back in the circuit by disconnecting the 9140X - connector interconnect cable from modem and connecting it to 9140 Station Controller. Also connect "9140 Station Controller to data set" cable to modem. Turn off all power to station. Check three fuses in 333669 power supply and fuse on 9140 Station Controller. Use an ohmmeter. Are any fuses blown? NOTE: The 333669 power supply provides dc power to 9140 Station Controller.	Replace blown fuses. After all good fuses are reinstalled, restore power to station. If fuse blows again, replace 333669 power supply. If fuse blows with new power supply, restore original power supply and isolate to a circuit card or wired frame of 9140 Station Controller.	Restore all fuses. Restore power to station. Go to 30.
30. Check 333669 power supply outputs with voltmeter at "N" connector while "N" connector is plugged into "JN" connector of 333669 power supply. Purple wire (pin 6) is circuit common. Measure between -12 V dc and -18 V dc on blue-white wire (pin 4). Measure between +12 V dc and +18 V dc on orange wire (pin 2). Are readings within specified voltage range?	Go to 31.	Replace 333669 power supply.

ANALYSIS QUESTION	"YES" RESPONSE DIRECTIVE	"NO" RESPONSE DIRECTIVE
31. Measure voltage between circuit card connector G, pin A1 and circuit card connector G, pin A4. Is voltage on G-A1 between +5.0 V dc and +5.5 V dc?	Go to 32.	Replace 303808 circuit card (under heatsink of 9140 Station Controller). If new circuit card does not provide proper voltage, check 9140 Station Controller wiring or replace 328812 wired frame of 9140 Station Controller.
32. Do any CDC straps on 322010 circuit card (A) touch bottom of baud timer circuit card A-3 (piggyback, on card A)? NOTE: If in doubt, follow "Yes" Response Directive.	Add 345699 insulator (if available) to bottom of piggyback card. Use electrical tape if insulator is not available.	Go to 33.
33. Check coding of CDCs, TSC, X-ON, X-OFF, ACK, and FDX INT. Does each level (1 through 7) of each character have either an "M" or "S" strap cut? NOTE: Each level must have one strap cut and the other strap left in.	Replace 303805 circuit card (A-3C 1050 baud) or 303839 circuit card (A-3E 1200 baud). Replace 322010 circuit card (A). Replace 322011 circuit card (B). Replace 322411 circuit card (B-1). NOTE: Remove B-1 circuit card. If station works without B-1 circuit card, then circuit card was bad. Replace 322017 circuit card (F1). Replace 322013 circuit card (C2).	Cut the proper straps.

D. TROUBLESHOOTING (Cont)

2. 9140 STATION CONTROLLER TROUBLESHOOTING GUIDE (Cont)

ANALYSIS QUESTION	"YES" DIRECTIVE DIRECTIVE	"NO" RESPONSE DIRECTIVE
34. Was A/B4, A/B4 (answer-back character 4 followed by answer-back character 4) received by test set in Step 2?	Go to 35.	Go to 37.
35. Measure voltage between circuit card connector E, pin 19 and circuit card connector E, pin A4. Is voltage on E-B19 about +9 V dc (from +3 V dc to +25 V dc)?	Go to 36.	Isolate trouble to KD or KDP controller or 9140X - Connector interconnect cable.
36. Measure voltage between circuit card connector E, pin A36 and circuit card connector E, pin A4. Is voltage on E-A36 approximately +5 V dc?	Replace 322013 circuit card (C2). Replace 322442 circuit card (C2-2).	Replace 322451 circuit card (E).
37. Was A/B3, A/B3 (answer-back character 3 followed by answer-back character 3) received by test set in Step 2?	Go to 38.	Go to 40.
38. Turn off all power to station. Is either strap 73 or 74 (or both) installed on 322442 circuit card (C2-2)?	Restore original C2 and C2-2 circuit cards. Restore all power to station. Go to 39.	Replace 322442 circuit card (C2-2).

ANALYSIS QUESTION	"YES" RESPONSE DIRECTIVE	"NO" RESPONSE DIRECTIVE
39. Measure voltage between circuit card connector C, pin A5 and circuit card connector C, pin A4. Is voltage on C-A5 approximately +5 V dc?	Replace 322442 circuit card (C2-2).	Replace 322442 circuit card (C2-2). Check wiring at circuit card connector C, pin A5.
40. On station equipped with printer, raise printer lid. KD or KDP: Depress LOCAL key. All stations: From test set, send CDC1. Does test set receive A/B4, A/B4 (answer-back character 4 followed by answer-back character 4)?	Replace 322442 circuit card (C2-2) if A/B1, A/B2 strapping is correct.	Replace 322442 circuit card (C2-2). Replace 322013 circuit card (C2). Replace 322011 circuit card (B).
41. Bypass 9140 Station Controller by disconnecting "9140 Station Controller to modem cable from modem. Disconnect the 9140X - connector interconnect cable from 9140 Station Controller and connect it to modem. KD or KDP: REC key must be lighted. ROP: IN SERVICE key must be lighted. Send a short message from the test set (no CDC or STX is required). Does the KD (or KDP) or ROP copy message without error?	Go to 42.	Isolate trouble to KD or KDP controller or 9140X - connector interconnect cable.

D. TROUBLESHOOTING (Cont)

2. 9140 STATION CONTROLLER TROUBLESHOOTING GUIDE (Cont)

ANALYSIS QUESTION	"YES" RESPONSE DIRECTIVE	"NO" RESPONSE DIRECTIVE
42. If 9140 Station Controller is still bypassed, place it back in the circuit (connect KD (or KDP) or ROP to 9140 Station Controller, and 9140 Station Controller to modem). When text 2 was sent in Step 25, did station copy anything?	Replace 322451 circuit card (E2). Replace 322011 circuit card (B).	Replace 322017 circuit card (F1). Replace 322013 circuit card (C2). Replace 322451 circuit card (E2).
43. KD or KDP: In Step 25, did station go to local mode upon receiving EOT? ROP or KDP: In Step 25, did printer motor stop upon receiving EOT? (KDP printer stops immediately (Model 40 option 53.b.) or after a 2 minute delay (Option 53.a.) NOTE: Printer paper feed out is not checked in this step.	Go to 45.	Go to 44.
44. KD or KDP: Measure voltage between circuit card connector E, pin A10 and circuit card connector E, pin A4. Is voltage on E-A10 approximately -9 V dc (-3 V dc to -25 V dc is acceptable)?	Isolate trouble to the KD or KDP or 9140X - connector interconnect cable. NOTE: If Model 40 Option 37.b. is installed, change option to 37.a.	Replace 322451 circuit card (E2). Replace 322017 circuit card (F1).

ANALYSIS QUESTION	"YES" RESPONSE DIRECTIVE	"NO" RESPONSE DIRECTIVE
44. (Cont) ROP: Measure voltage between circuit card connector E, pin B36 and circuit card connector E, pin B4. Is voltage on E-B36 approximately -9 V dc (-3 V dc to -25 V dc is acceptable)?		
45. KD or KDP: LOCAL key is lighted. ROP: Raise printer cabinet lid. All stations: From test set, send CDC1. Does test set copy A/B4, A/B4?	Go to 48.	9140 Station Controller Option 19.a.: Go to 46. 9140 Station Controller Option 19.b.: Go to 48.
46. Did test set copy A/B1, A/B2 in Step 45?	Go to 47.	9140 Station Controller Option 17.a. or 17.b.: Replace 322442 circuit card (C2-2). Replace 322013 circuit card (C2). 9140 Station Controller Option 17.c.: Go to 48.
47. Measure voltage between circuit card connector E, pin B19 and circuit card connector E, pin B4. Is voltage at E-B19 approximately -9 V dc (-3 V dc to -25 V dc is acceptable)?	Replace 322442 circuit card (C2-2). Replace 322013 circuit card (C2).	Isolate trouble to KD or KDP or the 9140X - connector interconnect cable.

D. TROUBLESHOOTING (Cont)

2. 9140 STATION CONTROLLER TROUBLESHOOTING GUIDE (Cont)

ANALYSIS QUESTION	"YES" RESPONSE DIRECTIVE	"NO" RESPONSE DIRECTIVE
48. From test set, send TSC. Does test set copy A/B4, A/B4? NOTE: If 9140 Station Controller Option 2.b. is installed, then TSC is TSC character 1, TSC character 2, Delete.	9140 Station Controller Option 18.a.: Go to 52. 9140 Station Controller Option 18.b.: Replace 322442 circuit card (C2-2).	Go to 49.
49. Did test set receive A/B1, A/B2 in Step 48?	9140 Station Controller Option 18.a.: Replace 322442 circuit card (C2-2). 9140 Station Controller Option 18.b.: Go to 52.	Go to 50.
50. Was a single character AB like NULL or a not valid two or more character AB like NULL and ACK copies by test set?	Replace 322442 circuit card (C2-2). If trouble remains, check modem squelch. It may be too long (do not use 156 ms squelch).	Go to 51.
51. Measure voltage between circuit card connector D, pin B9 and circuit card connector D, pin B4 when TSC is sent from test set. Is voltage at D-B9 ever approximately +5 V dc? In this step, a momentary positive deflection of the meter can be considered to be +5 V dc.	9140 Station Controller Option 17.a. or 17.b.: Replace 322442 circuit card (C2-2). Replace 322013 circuit card (C2). Replace 322014 circuit card (D1). 9140 Station Controller Option 17.c.: Replace modem. If station still does not send AB to a TSC, replace circuit cards listed above.	Check TSC coding on 322014 circuit card (D1). If correct, replace the circuit card (D1).
52. In addition to A/B1, A/B2 (or A/B4, A/B4), was some other character copied by test set in Step 48?	Go to 53.	Go to 54.

IS QUESTION	"YES" RESPONSE DIRECTIVE	"NO" RESPONSE DIRECTIVE
53. Was additional character after A/B1, A/B2 (or A/B4, A/B4)?	If option for hard turn-off of station modem carrier was selected, try some soft turn-off option. If a soft turn-off of station modem was selected, replace modem or try a longer soft turn-off.	Addition character was before A/B1, A/B2 (or A/B4, A/B4). Replace station modem or try a longer squelch or clear-to-send interval at station modem.
54. KD or KDP: Depress REC key. ROP: Lower and latch printer cabinet lid. All stations: From test set, send TSC. Does test set copy A/B1, A/B2?	Go to 55.	Replace 322442 circuit card (C2-2). Replace 322013 circuit card (C2).
55. Is station a KD or KDP? (If KD or KDP is only part of station, treat station as if it is a KD or KDP.)	Go to 56.	Station is an ROP. Go to 64.
56. In local mode, prepare a short message on display: STX, 20 or 30 "U*" characters, and EOT. If cursor is not in Home position, depress HOME key. If SEND key is not lighted, depress SEND key. (If these actions cannot be performed, trouble is in KD or KDP controller.) Does cursor begin moving?	Turn off all power to station. Check that Model 40 Option 37.a. is installed, as required. If Model 40 Option 37.a. is installed, replace 410771 circuit card in KD or KDP controller. If trouble remains, isolate problem within KD or KDP controller. Refer to Controller Analysis in Part 6.	Go to 57.

D. TROUBLESHOOTING (Cont)

2. 9140 STATION CONTROLLER TROUBLESHOOTING GUIDE (Cont)

ANALYSIS QUESTION	"YES" RESPONSE DIRECTIVE	"NO" RESPONSE DIRECTIVE
57. From test set, send TSC. Does test set copy message?	Go to 58.	Go to 59.
58. Is message received at test set in Step 57 without error?	Go to 62.	Go to 61.
59. Did test set receive any AB in Step 57?	Go to 60.	Go to 61.
60. Measure voltage between circuit card connector E, pin B33 and circuit card connector E, pin B4. Is voltage at E-B33 approximately +9 V dc (+3 V dc to +25 V dc is acceptable)?	Replace 322451 circuit card (E2). Replace 322014 circuit card (D1). Replace 322442 circuit card (C2-2). Replace 322013 circuit card (C2).	Isolate to KD (or KDP) or ROP controller or the 9140X - connector interconnect cable.
61. Depress LOCAL and HOME keys. Bypass 9140 Station Controller by disconnecting "9140 Station Controller to modem cable from modem. Disconnect the 9140X - connector interconnect cable from 9140 Station Controller and connect it to modem. Depress SEND key. Does test set copy without error?	Trouble is in 9140 Station Controller. Reconnect 9140 Station Controller and replace 322451 circuit card (E2). Replace 322014 circuit card (D1). Replace 322011 circuit card (B). Replace 322013 circuit card (C2). Replace 322083 circuit card (G3). Replace 322442 circuit card (C2-2).	Refer to Controller Analysis in Part 6.

ANALYSIS QUESTION	"YES" RESPONSE DIRECTIVE	"NO" RESPONSE DIRECTIVE
62. Did cursor on KD or KDP keep moving after EOT?	Refer to Controller Analysis in Part 6.	Go to 63.
63. Does station modem carrier remain on after EOT is sent?	Replace 322083 circuit card (G3). Replace 322014 circuit card (D1). Replace 322017 circuit card (F1). Replace 322013 circuit card (C2). Replace 322451 circuit card (E2).	Go to 64.
64. Is CDC2 coded different than CDC1?	Go to 65.	Go to 70.
65. ROP: IN SERVICE key must be lighted. KD or KDP: REC key must be lighted. KDP: PRINT ON LINE key must be lighted. All stations: From test set, send CDC2. Does test set copy some answer-back?	Go to 66.	9140 Station Controller Option 17.d. or 17.e.: Check CDC2 strapping on 322010 circuit card (A). If straps are correct replace circuit card (A). 9140 Station Controller Option 17.f.: Go to 69.
66. In Step 65, was answer-back A/B1, A/B2?	9140 Station Controller Option 17.d. or 17.e. is installed. Check that order calls for this option. Go to 67.	Answer-back to CDC2 must be correct if AB to CDC1 was correct. Go back to 2.

D. TROUBLESHOOTING (Cont)

2. 9140 STATION CONTROLLER TROUBLESHOOTING GUIDE (Cont)

ANALYSIS QUESTION	"YES" RESPONSE DIRECTIVE	"NO" RESPONSE DIRECTIVE
67. ROP: Raise printer cabinet lid. KD or KDP: Depress LOCAL key. All stations: From test set, send EOT and CDC2. Does test get copy A/B4, A/B4?	9140 Station Controller Option 19.c. is installed. ROP: Lower and latch printer cabinet lid. KD or KDP: Depress REC key. All stations: Go to 70.	Go to 68.
68. Is 9140 Station Controller Option 19.d. installed?	ROP: Lower and latch printer cabinet lid. KD or KDP: Depress REC key. All stations: Go to 70.	Replace 322010 circuit card (A).
69. From test set, send STX, text, and EOT. Does station copy text?	Go to 70.	Check CDC2 strapping on 322010 circuit card (A). If straps are correct replace circuit card (A).
70. Is 322409 circuit card (A-1) present in 9140 Station Controller?	Go to 71.	Go to 75.
71. From test set, send CDC3. Is answer-back received at test set?	Go to 72.	9140 Station Controller Option 17.g. or 17.h.: Check CDC3 strapping on 322409 circuit card (A-1). If straps are correct, replace circuit card (A-1). 9140 Station Controller Option 17.i.: Go to 74.
72. ROP or KDP: Raise printer cabinet lid. KD or KDP: Depress LOCAL key. All stations: From test set, send EOT and CDC3. Does test set copy A/B4, A/B4?	ROP or KDP: Lower and latch printer cabinet lid. KD or KDP: Depress REC key. All stations: Go to 75.	Go to 73.

ANALYSIS QUESTION	"YES" RESPONSE DIRECTIVE	"NO" RESPONSE DIRECTIVE
73. Is 9140 Station Controller Option 19.f. installed?	KD or KDP: Depress REC key. ROP or KDP: Lower and latch printer cabinet lid. All stations: Go to 75.	Replace 322409 circuit card (A-1).
74. From test set, send STX, text, and EOT. Does station copy text?	Go to 75.	Check CDC3 strapping on 322409 circuit card (A-1). If straps are correct, replace circuit card (A-1). Replace 322010 circuit card (A).
75. Is station equipped with 345625 alarm modification kit? Identify by presence of 322641 circuit card (mounted piggy-back on G3 circuit card).	Go to 76.	Go to 89.
76. KD or KDP: Depress LOCAL key. ROP or KDP: Raise printer cabinet lid. All stations: From test set, send CDC1. Does alarm sound for approximately the time chosen in 9140 Station Controller Option 27?	Go to 79.	Go to 77.
77. Does alarm sound at all in Step 76?	Check strapping on 322641 circuit card (piggyback on G3). If strapping is correct, replace 322641 circuit card. Replace 322083 circuit card (G3).	Go to 78.

D. TROUBLESHOOTING (Cont)

2. 9140 STATION CONTROLLER TROUBLESHOOTING GUIDE (Cont)

ANALYSIS QUESTION	"YES" RESPONSE DIRECTIVE	"NO" RESPONSE DIRECTIVE
78. Remove black clip-on wire from circuit card connector G, pin B33. Touch it to circuit card connector G, pin B4. Does alarm sound?	Restore black wire to pin B33 on connector G. Replace 322641 circuit card (piggyback on G3 circuit card). Replace 322083 circuit card (G3).	Replace 345626 alarm assembly.
79. KD or KDP: Depress REC key. ROP or KDP: Lower and latch printer cabinet lid. All stations: Is 9140 Station Controller Option 1.h. (FDX INT) used in the system the station is part of?	Go to 80.	Go to 89.
80. From test set, send CDC1. Test set copies A/B1, A/B2 if 9140 Station Controller Option 17.a. or 17.b. is used. From test set send STX, text, FDX INT, and CDC1. Does test set copy A/B1, A/B2 after FDX INT and CDC1?	Go to 83.	Go to 81.
81. Did test set receive A/B3, A/B3 in Step 80?	Replace 322442 circuit card (C2-2). Replace 322641 circuit card (piggyback on G3). Replace 322411 circuit card (B-1).	Go to 82.

ANALYSIS QUESTION	"YES" RESPONSE DIRECTIVE	"NO" RESPONSE DIRECTIVE
82. Does test set copy any AB?	Check A/B3 strapping on 322442 circuit card (C2-2). If strapping is correct, replace C2-2 circuit card.	9140 Station Controller Option 17.a. or 17.b.: Check FDX INT strapping on 322013 circuit card (C2). Replace 322013 circuit card (C2). Replace 322014 circuit card (D1). 9140 Station Controller Option 17.c.: Go to 83.
83. From test set, send EOT and CDC1. Does test set copy A/B1, A/B2?	Go to 84.	9140 Station Controller Option 17.c.: Go to 84. 9140 Station Controller Option 17.a. or 17.b.: Station should have failed other tests. Go to 2.
84. From test set, send STX, text (with parity error), FDX INT, and CDC1. Does test set copy A/B3, A/B3?	Go to 85.	9140 Station Controller Option 20.b. or 20.d. must be installed. Replace 322442 circuit card (C2-2). Replace 322641 circuit card (piggyback on G3). Replace 322411 circuit card (B-1).
85. From test set, send STX,FDX INT, and CDC1. Does test set copy A/B3, A/B3?	9140 Station Controller Option 27.d.: Replace 322641 circuit card (piggyback on G3). 9140 Station Controller Option 27.e.: Go to 87.	Go to 86.

D. TROUBLESHOOTING (Cont)

2. 9140 STATION CONTROLLER TROUBLESHOOTING GUIDE (Cont)

ANALYSIS QUESTION	"YES" RESPONSE DIRECTIVE	"NO" RESPONSE DIRECTIVE
86. Was AB received in Step 85 A/B1, A/B2?	9140 Station Controller Option 27.d.: Go to 87. 9140 Station Controller Option 27.e.: Replace 322641 circuit card (piggyback on G3). Replace 322442 circuit card (C2-2).	Replace 322641 circuit card (piggyback on G3). Replace 322442 circuit card (C2-2).
87. From test set, send EOT and CDC1. AB from station depends on 9140 Station Controller Option 17. From test set, send STX, text (with parity error), FDX INT, and CDC1. Test set copies A/B3, A/B3. From test set send EOT and CDC1. Does test set copy A/B1, A/B2?	Go to 89.	9140 Station Controller Option 17.a. or 17.b.: Go to 88. 9140 Station Controller Option 17.c.: Go to 90.
88. Does test set copy A/B3, A/B3 in Step 87?	Replace 322442 circuit card (C2-2). Replace 322641 circuit card (piggyback on G3).	Station should have failed other steps also. Go to 2.
89. From test set send EOT. Is LOCAL key lighted at station? NOTE: LOCAL key may already be lighted.	Depress REC key. Go to 90.	Go to 90.
90. From test set, send EOT and CDC (where CDC is another station CDC). If station is receiving messages directed to another station, the other station CDC should be tried in	Check CDC coding on 322010 circuit card (A) and 322409 circuit card (A-1), if present. If both M and S straps of some level (1 through 7) are cut, that is problem. If coding is correct, replace 322010 circuit card (A).	Go to 91.

ANALYSIS QUESTION	"YES" RESPONSE DIRECTIVE	"NO" RESPONSE DIRECTIVE
90. (Cont) this step. The other station must not be connected to test set. Does test set copy an AB?	Replace 322409 circuit card (A-1), if present.	
91. From test set, send STX, text, and EOT. Does station copy text?	Check CDC coding on 322010 circuit card (A) and 322409 circuit card (A-1), if present. If both M and S straps of some level (1 through 7) are cut, that is problem. If coding is correct, replace 322010 circuit card (A). Replace 322409 circuit card (A-1), if present.	Go to 92.
92. Is KD or KDP part of station?	Go to 93.	Station is an ROP. Go to 94.
93. From test set, send EOT and TSC (where TSC is another station TSC). If station is sending a response to another station TSC, the other station TSC should be tried in this step. The other station must not be connected to test set. Does test set copy an AB?	Check TSC coding on 322014 circuit card (D1). If both M and S straps of some level (1 through 7) are cut, that is the problem. If coding is correct, replace 322014 circuit card (D1).	Go to 94.
94. Is station part of a system that uses "break" operation to deselect receivers and/or halt senders? NOTE: "Break" is a 300 ms space sent from computer modem.	Go to 95.	"Break" is not used in this system. Place station in service.

D. TROUBLESHOOTING (Cont)

2. 9140 STATION CONTROLLER TROUBLESHOOTING GUIDE (Cont)

ANALYSIS QUESTION	"YES" RESPONSE DIRECTIVE	"NO" RESPONSE DIRECTIVE
95. Does station contain a KD or KDP?	Go to 96.	Station is an ROP. Go to 97.
96. With a long message on display and SEND key lighted, send TSC from test set. After test set begins receiving, send a break signal from test set. Does station cursor stop, REC key light, and SEND key light go out?	Place station in service.	Go to 98.
97. From test set, send EOT and CDC1. Printer motor will start. Disreagard AB. Send a break signal from test set. Does printer motor stop?	Place station in service. (KDP printer stops immediately (Model 40 option 53.b.) or after a 2 minute delay (Option 53.a.)	Go to 98.
98. Depress LOCAL, HOME, and SEND keys. From test set, send TSC. After test set begins receiving, it sends a break signal. While "break" is being sent, measure voltage between circuit card connector D, pin B36 and circuit card connector D, pin B4. Is voltage at D-B36 ever approximately +12 V dc? NOTE: A momentary positive deflection of the meter can be considered to be +12 V dc.	Isolate trouble to the 9140X - Connector interconnect cable or 410771 circuit card (in the KD or KDP controller), or KD or KDP controller (all stations).	Voltage is approximately 0 V dc. Replace 322014 circuit card (D1). Replace 322013 circuit card (C2). Replace 322451 circuit card (E1).

3. IRS ANALYSIS

ANALYSIS QUESTION	"YES" RESPONSE DIRECTIVE	"NO" RESPONSE DIRECTIVE
1. Turn off all power. Check the four fuses associated with IRS (three on power supply, one on IRS heat sink). Are any open? NOTE: If the station has not passed its On-Line Test (in some type of valid 40/3 Type Station Arrangement(s) before the IRS modification kit was installed, then the trouble may be in any component of the station.	Replace open fuse. Go to 2.	Go to 4.
2. Turn on all power. Continue the test that the station failed. Does the station still fail?	The station still fails. Turn off all power. Recheck fuses of Question 1, go to 3.	Return to on line tests.
3. Did same fuse open again? Try applicable instructions A-E, one at a time, until trouble is corrected. NOTE: Check that 303808 voltage regulator card in the 9140 Station Controller is Issue 7A or greater. If not, then the 303808 circuit card may be at fault.	Power is off. If fuse on power supply is open: a. Replace power supply. b. Replace "R" card. c. Replace 344543 card. d. Replace IRS. e. Replace 344545 cable. If fuse on IRS heat sink is open: a. Replace "R" card. b. Replace power supply. c. Replace 344543 card. d. Replace IRS. e. Replace 344545 cable.	Replace fuse, go to 2.

NOTE: This information is written for the KD (or KDP) being the secondary receiver and the ROP being the primary receiver. The primary receiver is defined as the receiver assigned to CDC1, and affects the "No-Traffic" response to TSC. This test procedure can be used if the KD (or KDP) is the primary receiver provided this information is kept in mind.

D. TROUBLESHOOTING (Cont)

3. IRS ANALYSIS (Cont)

ANALYSIS QUESTION	"YES" RESPONSE DIRECTIVE	"NO" RESPONSE DIRECTIVE
4. Power is off. Are all cables connected, and all power cords plugged in, and power switches "ON"? 344545 cable: At "X TERM" and "X 9140" end ("X TERM" to 345603 cable) ("X 9140" to 9140 "X" connector.) At "X TERM" and "X IND REC" end ("X TERM" to RO controller) ("X IND REC" to IRS "X" connector). Other end of 345603 cable to "DATA SET" connector of KD (or KDP). These and other cables are shown in Section 582-200-203.	Go to 5.	Make connection, plug in power cord, or turn on switch. Repeat on-line test.
5. Turn all power off. Connect KD to 9140 with 345603 cable. Connect 9140 to data set with 9140 cable. No connections to ROP, IRS, or 344545 cable. Turn on power to KD, 9140, and data set. Go to on-line test and follow applicable steps for KD (or KDP). Does station pass all such steps?	Problem is in IRS, associated power supply, 344545 cable or ROP. Go to 6.	Problem is in KD, 9140, 345603 cable or data set.

ANALYSIS QUESTION	"YES" RESPONSE DIRECTIVE	"NO" RESPONSE DIRECTIVE
6. Restore connection to ROP, IRS and 344545 cable. Does station fail a corresponding test in on-line test that it passed as a KD (or KDP) in on-line test. Example: Receiving, transmitting or sending AB to a CDC.	Go to 7.	Go to 7.
7. Is it a sending failure, not a receiving failure?	ROP or IRS power supply is not at fault. Replace IRS,344545 cable.	Go to 8.
8. Is it a receiving failure, not a sending failure?	Go to 9.	Go to 11.
9. Does the ROP and KD (or KDP) both fail to receive?	Replace IRS, 344545 cable.	Just one fails. Go to 10.
10. Does KD or KDP fail to receive?	Replace IRS, 344545 cable.	Replace IRS, 344545 cable, ROP controller.
11. Is it both a sending and receiving failure?	Replace IRS, associated power supply, 344545 cable.	Go to 12.
12. Is it a failure not covered above?	Replace IRS, 344545 cable, RO controller, associated power supply (for IRS). Other parts of station cannot cause failure.	Return to step in this procedure that station fails.

E. ADJUSTMENTS AND LUBRICATION

There are no adjustments for the 9140 Station Controllers as used in Model 40 Stations. The only required mechanical action is to make sure that all circuit cards are firmly seated in the correct 9140 Station Controller location.

Lubrication is not needed on the 9140 Station Controller components.

F. DISASSEMBLY/REASSEMBLY AND PARTS

1. GENERAL

This section provides the disassembly/reassembly and part replacement procedures needed to properly service the Model 40 9140 Station Controllers. Step-by-step procedures are given for all component removal. Disassembly/Reassembly of the 9140 Station Controllers are given in the form of exploded views.

Certain procedural demands are to be maintained by servicing personnel for circuit card removal.

a. Turn off terminal power switch.
b. Put on 346392 static discharge strap to avoid damage to sensitive circuitry.
c. Remove cards as shown in Parts 3 and 4.
d. Transport circuit cards by the edges of the card.
e. Avoid touching circuits lands or card components.

The procedural demands for component removal, after card removal.

a. Remove ac plug from its wall receptacle before attempting any disassembly.
b. Remove signal source cabling before attempting any disassembly.

2. CARD REMOVAL -- 9140 STATION CONTROLLER

CAUTION: ATTACHED ELECTRONICS PACKAGE WEIGHS APPROXIMATELY 50 POUNDS AND MAY DROP SUDDENLY.

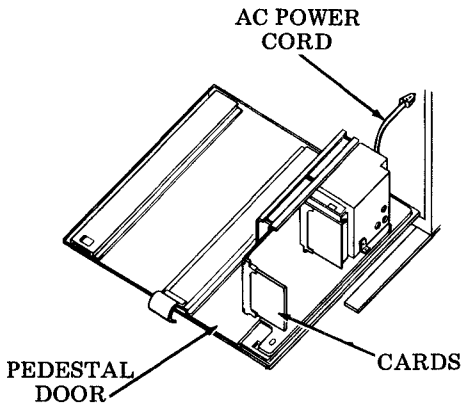

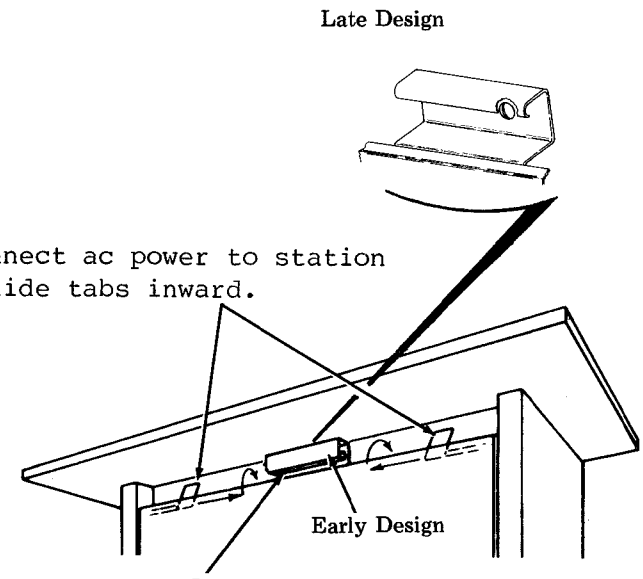

① Disconnect ac power to station and slide tabs inward.

(Early Design) ② Push up on grip latch and pull out slowly.

(Late Design) (2a) Hold pedestal door securely with one hand and insert screwdriver in slotted area of latch. Turn screwdriver 1/4 turn counterclockwise and slowly lower the door.

③ Unplug ac power cord from its receptacle.
④ Unplug cable to data set.
⑤ Remove desired card by a steady pull.
⑥ Remove piggyback card gently by pulling up (observe positioning).

3. DISASSEMBLY/REASSEMBLY

9140 Station Controller Removal

①Unplug ac power cord from its receptacle.
②Unplug cable from the 9140 Station Controller to modem.
③Unplug 341896* EIA cable to X connector on 9140 Station Controller.
④Remove two 185871 mounting screws from frame of 9140 Station Controller and pull station controller forward to disengage from rear mounting tab. Remove station controller and mounting frame from pedestal door. (It may be necessary to remove circuit cards to gain access to the mounting screws.) Remove cable clamp, if present, from right side of pedestal door.

F. DISASSEMBLY/REASSEMBLY AND PARTS (Cont)

3. DISASSEMBLY/REASSEMBLY (Cont)

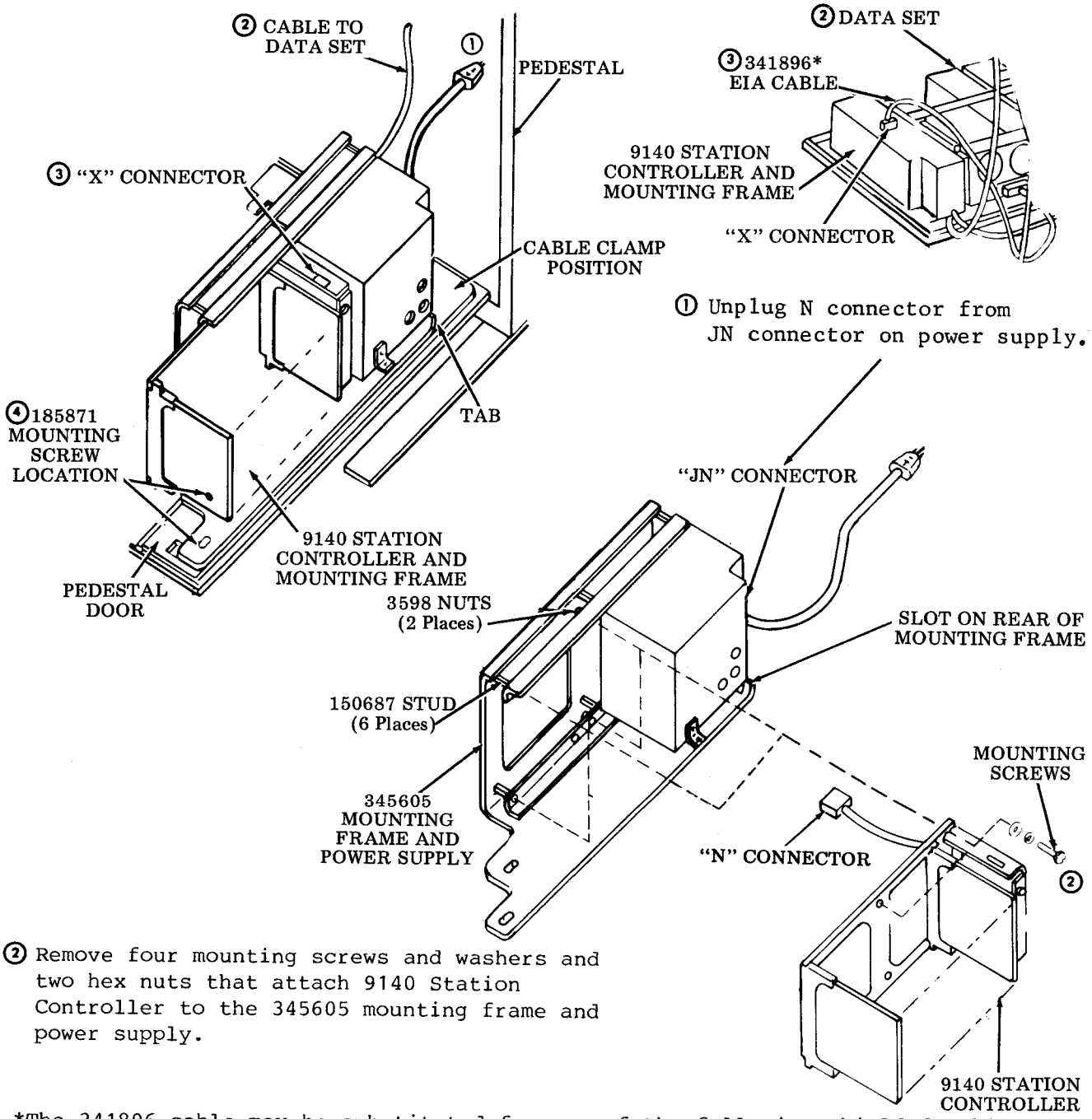

② Remove four mounting screws and washers and two hex nuts that attach 9140 Station Controller to the 345605 mounting frame and power supply.

*The 341896 cable may be substituted for one of the following shielded cables when necessary: 408065-7', 408066-12', 408067-25', and 408068-50'.

Power Supply Removal

1. Unplug N connector and ac cord from power supply.
2. Remove 1170 flathead screw from bottom of mounting frame.
3. Remove four 184058 screws that attach power supply to mounting frame.

Power Supply Fuses
1/2A -- 117176
3/8A -- 159269
2A -- 120166

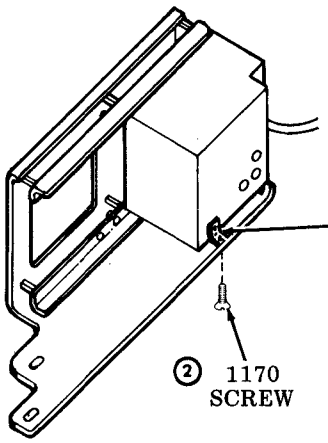

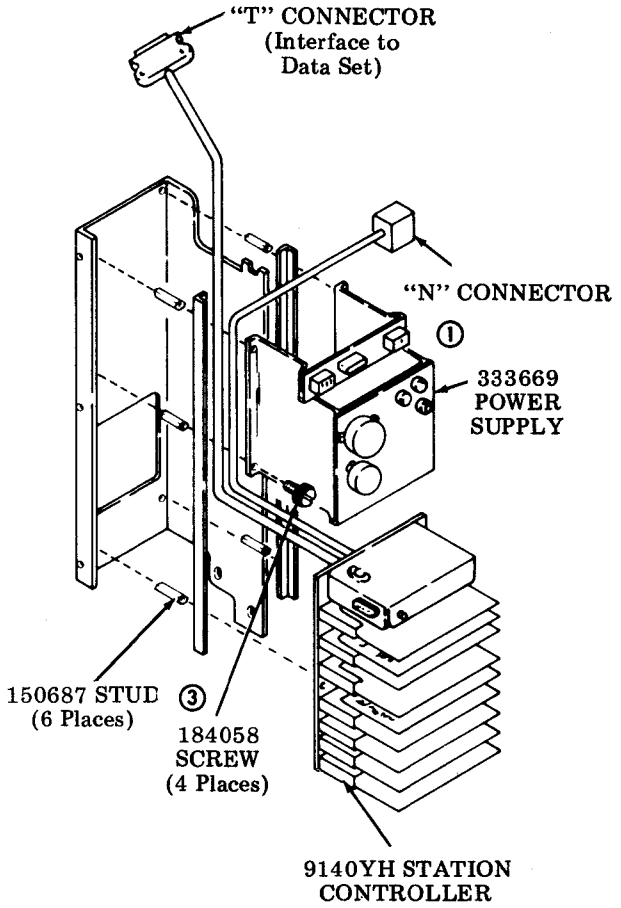

NOTE: If the power supply is being changed, transfer the 345674 bracket and 192286 speed nut to the new power supply.

345625 Alarm/Parity Response Modification Kit

1. The 345626 alarm assembly is held to 345601 mounting frame with two 198670 screws with lockwashers.
2. The 322641 answer-back and alarm circuit card is required on 322083 circuit card in position G.
3. Cable of 345626 alarm assembly is routed between mounting posts and 345601 mounting frame. Slip-on terminal of red wire on pin B35 of card connector in position E and terminal of black wire on pin B33 of card connector in position G must be seated firmly.

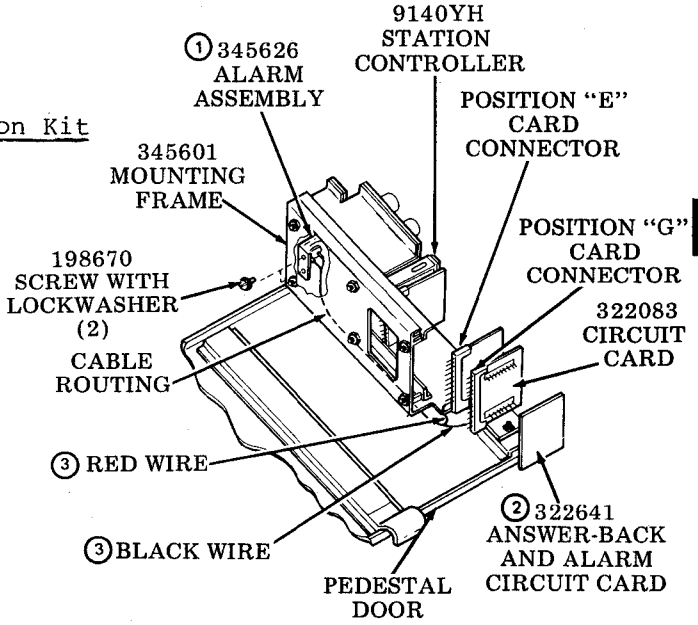

F. DISASSEMBLY/REASSEMBLY AND PARTS (Cont)

3. DISASSEMBLY/REASSEMBLY (Cont)

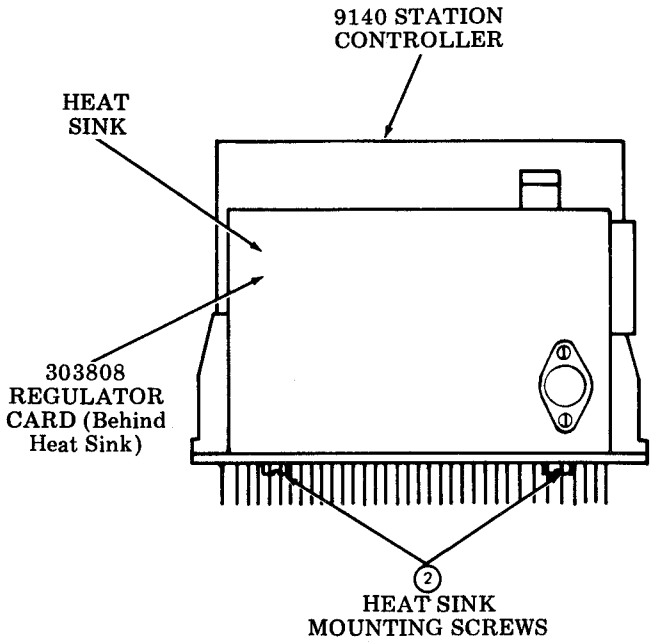

Wire Location

Post No.	Wire Color
1	Red
2	Slate
3	White
4	Blue and Yellow (2 wires)
5	Black
6	Purple

318835 Power Transistor

1. Remove 9140 Station Controller from its mounting frame. Refer to Page 50.

2. Remove two heat sink mounting screws from bottom of 9140 Station Controller wired frame.

3. Unsolder slate wire from transistor base lead and blue wire from emitter lead.

4. Remove two mounting screws, washers, red collector wire, mica insulator, and transistor from heat sink.

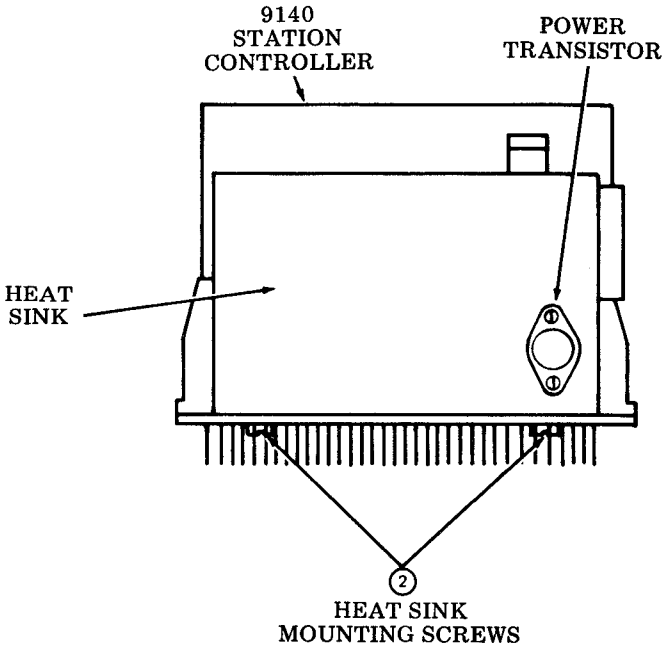

344555 Individual Receiver Selection Modification Kit - IRS

1. Turn pedestal and cabinet power OFF for the KD (or KDP) and ROP. Unplug ac power cord from power distribution panel for the 9140 Station Controller (in the KD or KDP pedestal) and the IRS Controller (in the ROP pedestal).

2. KD or KDP: Disconnect the "X 9140" connector of the 344545 cable from the "X" connector of the 9140 and "X TERM" connector of the 344545 cable from the 345603 data set cable of the KD (or KDP.)

   ROP: Disconnect the "X TERM" connector of the 344545 cable from the data set connector of the ROP controller and the "X IND. REC." connector of the 344545 cable from the "X" connector of the IRS modification kit.

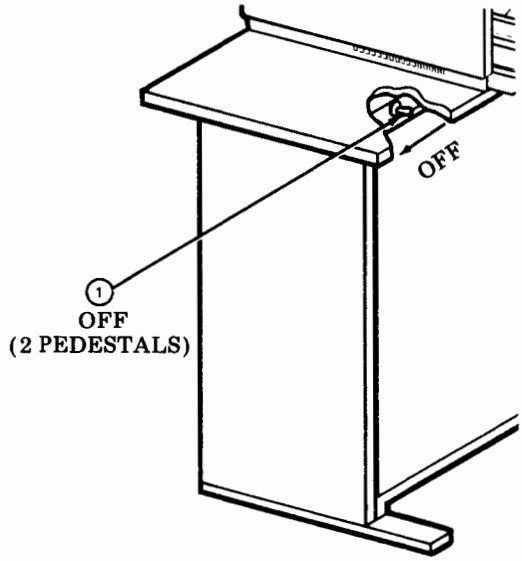

KD+ROP STATION EQUIPPED WITH INDIVIDUAL RECEIVER SELECTION MODIFICATION KIT

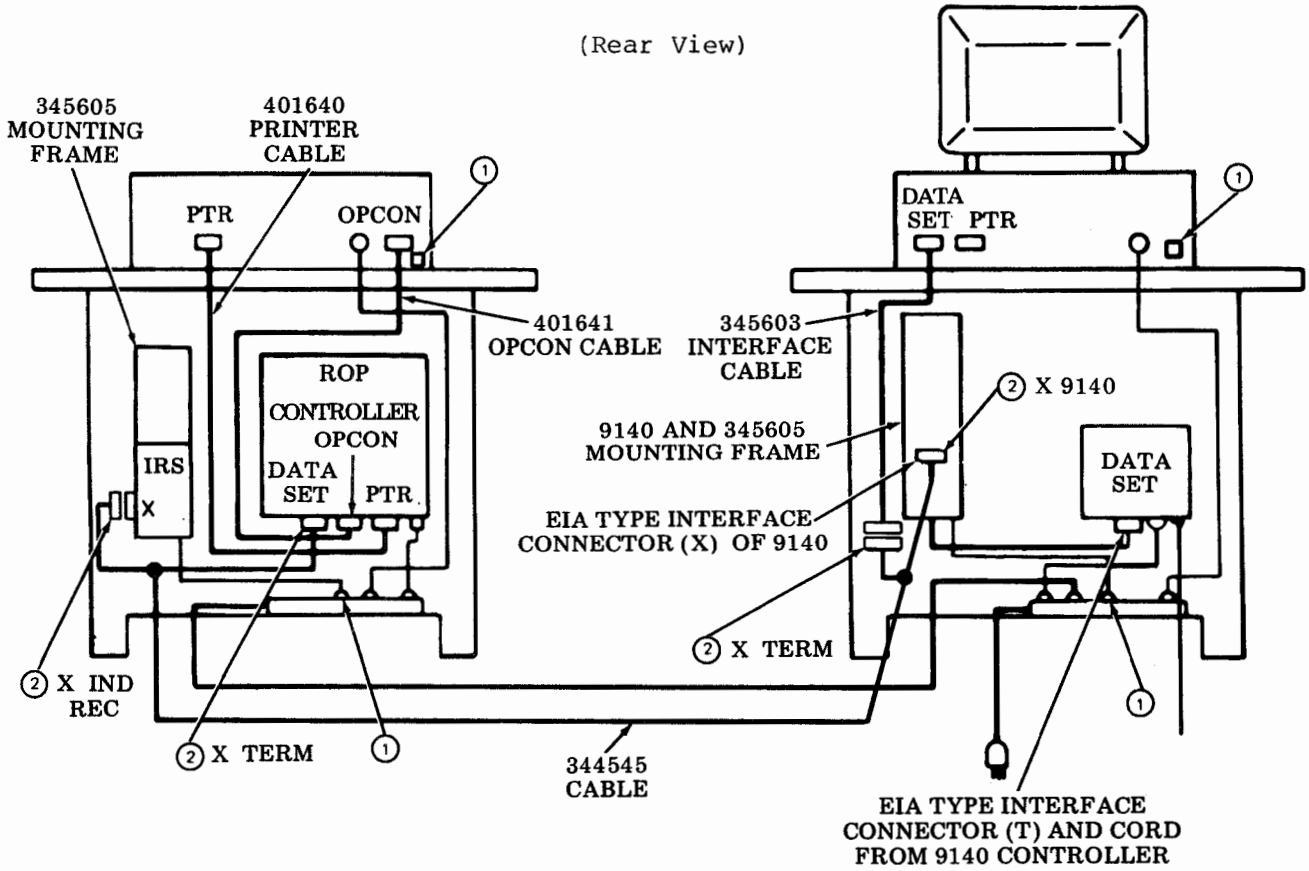

F. DISASSEMBLY/REASSEMBLY AND PARTS (Cont)

4. PARTS -- 9140 STATION CONTROLLER

③ Remove two 185871 mounting screws from 345605 mounting frame and power supply and pull IRS controller assembly forward to disengage rear mounting tab. Remove assembly from pedestal door.

④ For further disassembly/reassembly refer to Specification 50,800S.

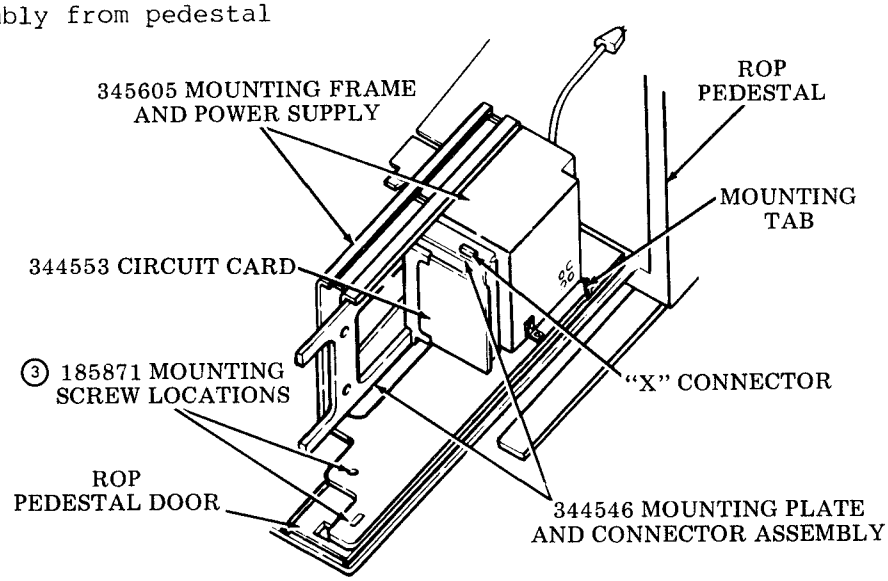

COMPONENT REMOVAL

303808 Regulator Card

① Remove 9140 Station Controller from its mounting frame. Refer to Page 50.

② Remove two heat sink mounting screws from bottom of 9140 Station Controller wired frame.

③ Pull the slip-on terminals off of posts 1,2,3, and 6 on the bottom of the 303808 regulator card.

④ Unsolder the wires from posts 4 and 5 on the bottom of the regulator card.

⑤ Remove the two mounting screws that attach the 303808 regulator card to the heat sink.

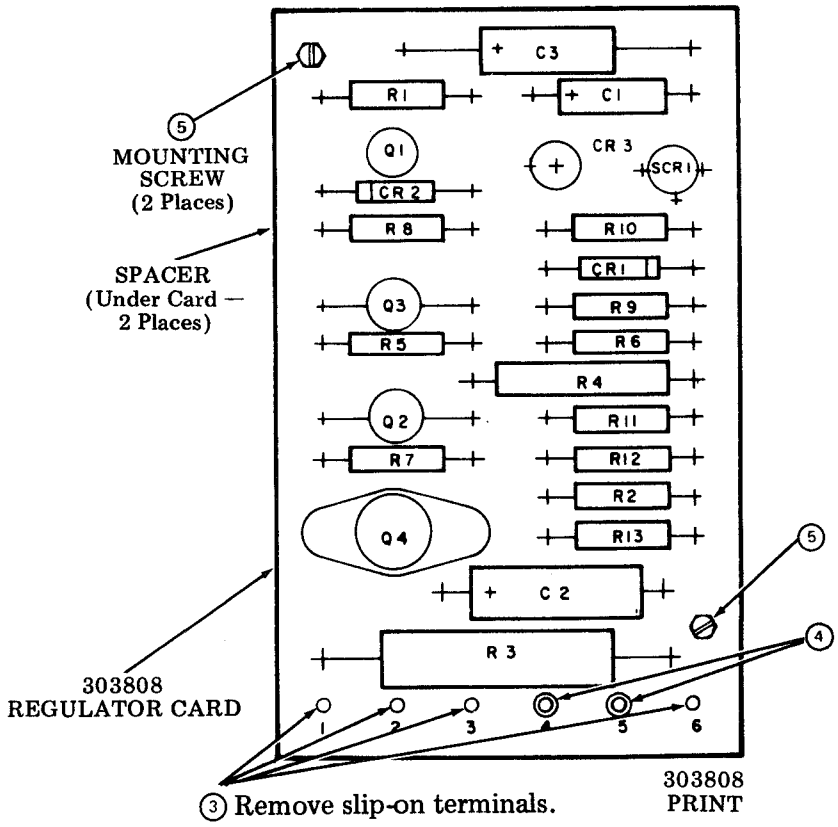

Mounting Components

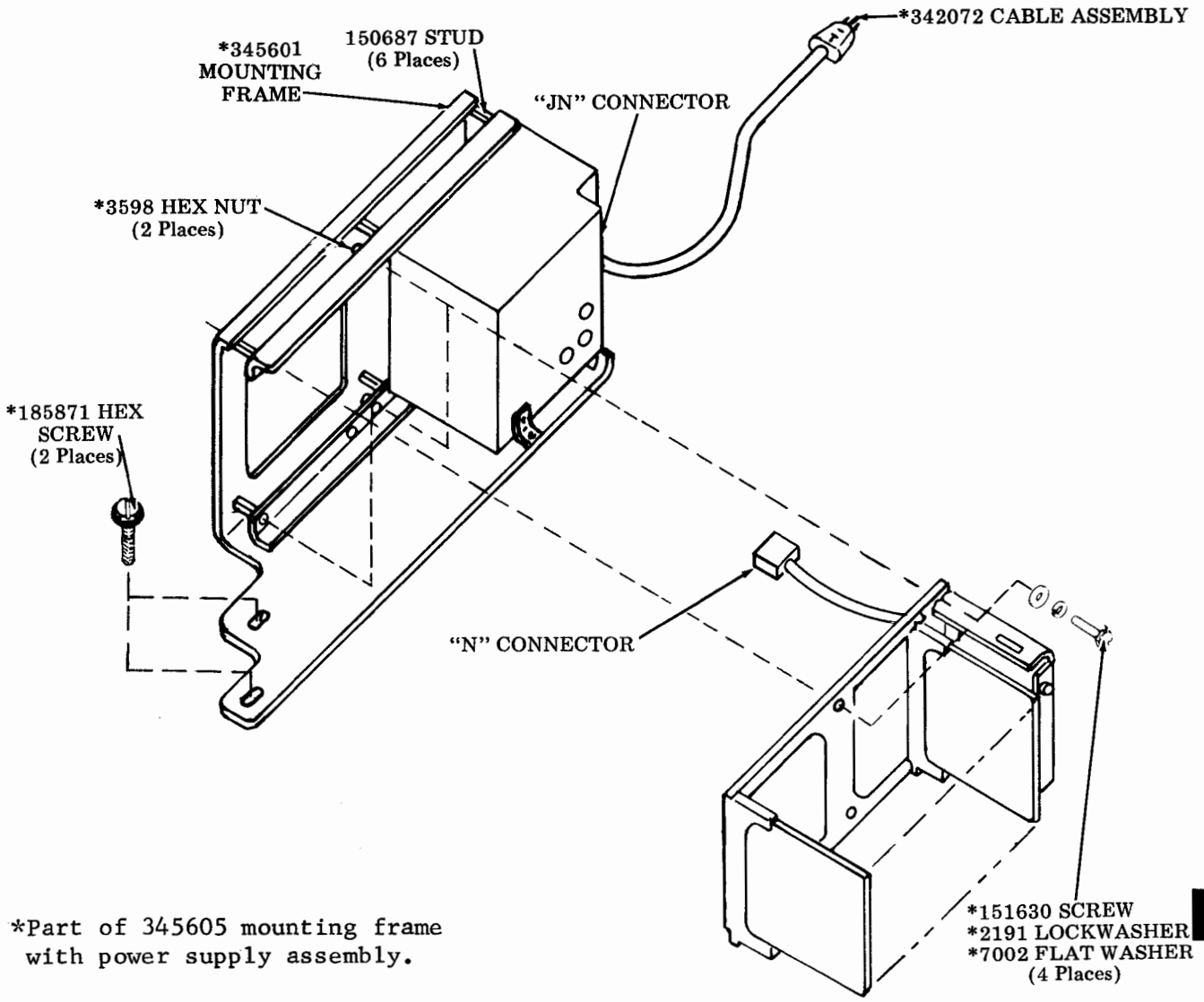

*Part of 345605 mounting frame with power supply assembly.

F. DISASSEMBLY/REASSEMBLY AND PARTS (Cont)

4. PARTS -- 9140 STATION CONTROLLER (Cont)

Replaceable Components

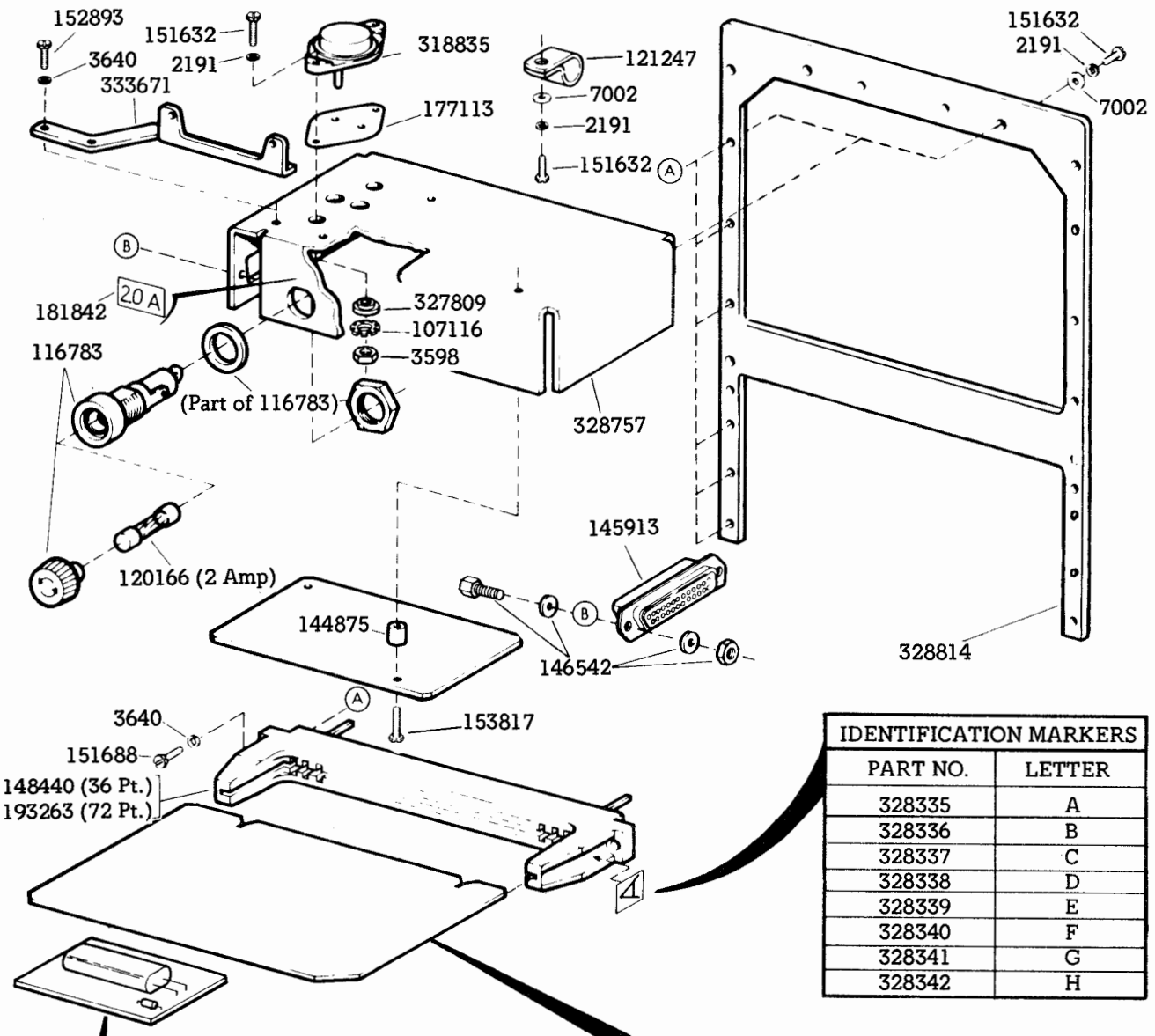

IDENTIFICATION MARKERS	
PART NO.	LETTER
328335	A
328336	B
328337	C
328338	D
328339	E
328340	F
328341	G
328342	H

TIMER CARD CHART	
NUMBER	DESCRIPTION
303805	1050 wpm
303839	1200 wpm
303863	1800 wpm
303864	2400 wpm

CIRCUIT CARD CHART			
NUMBER	DESCRIPTION	NUMBER	DESCRIPTION
303734	Receive Only Logic	322083	Channel Control-Store & Forward
322010	CDC Detector	322409	Third CDC
322011	R/T Distributor	322411	Vertical Parity
322013	RO Control Logic (8A1)	322442	A/B & Motor Control
322014	S/R Logic	322451	EIA Interface
322017	Buffer	322641	Alarm/Parity Response
322018	Buffer & Substitute Character	322685	CDC Detector -1800 and 2400 Baud

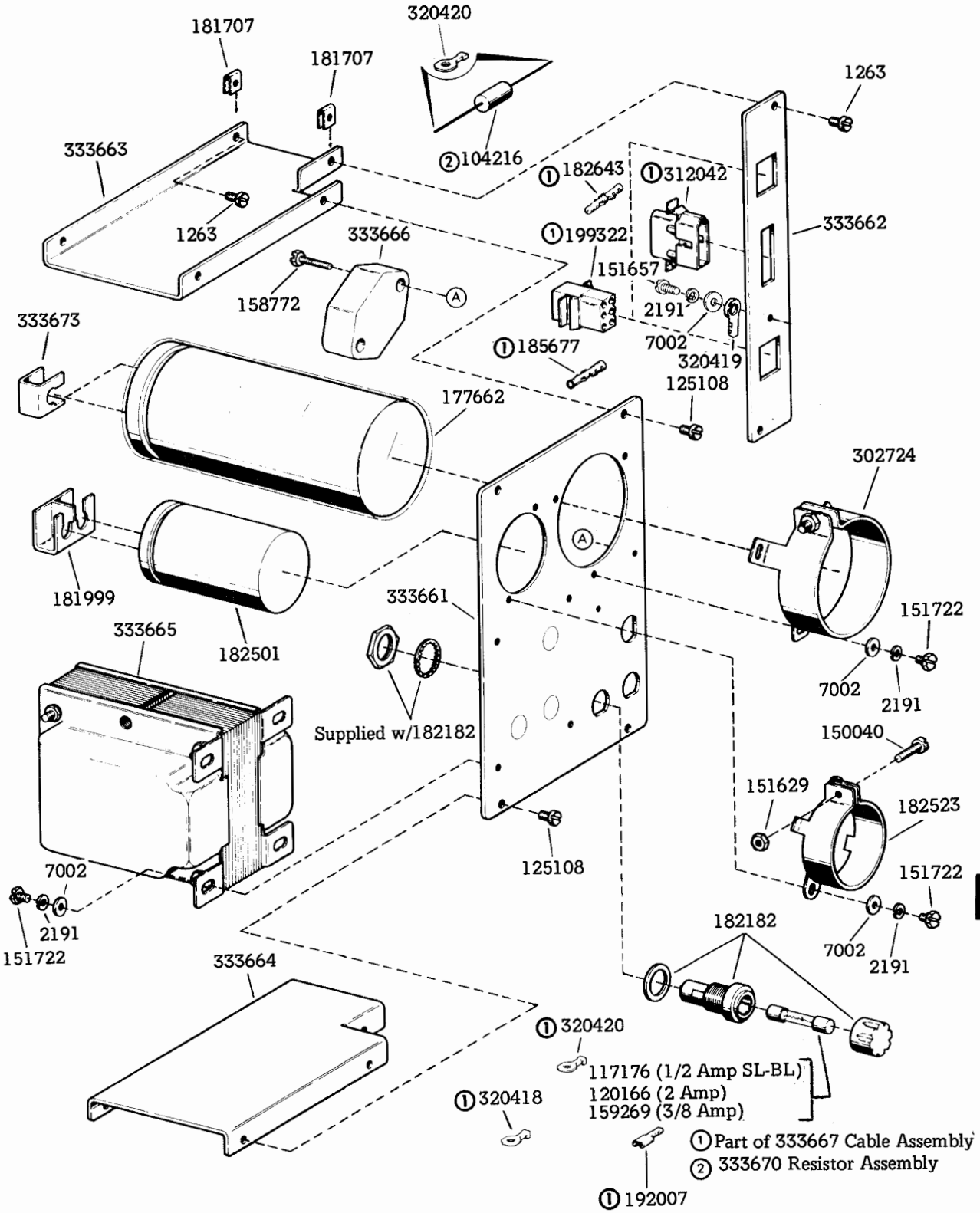
181707
181707
320420
1263
333663
②104216
①182643
①312042
1263
333662
333666
①199322
151657
158772
2191
333673
7002
①185677
320419
125108
177662
302724
181999
333661
151722
333665
182501
7002
2191
Supplied w/182182
150040
151629
182523
125108
7002
151722
2191
151722
182182
7002
2191
333664
①320420
117176 (1/2 Amp SL-BL)
120166 (2 Amp)
159269 (3/8 Amp)
①320418
①Part of 333667 Cable Assembly
② 333670 Resistor Assembly
①192007

F. DISASSEMBLY/REASSEMBLY AND PARTS (Cont)

4. PARTS -- 9140 STATION CONTROLLER (Cont)

345625 Modification Kit

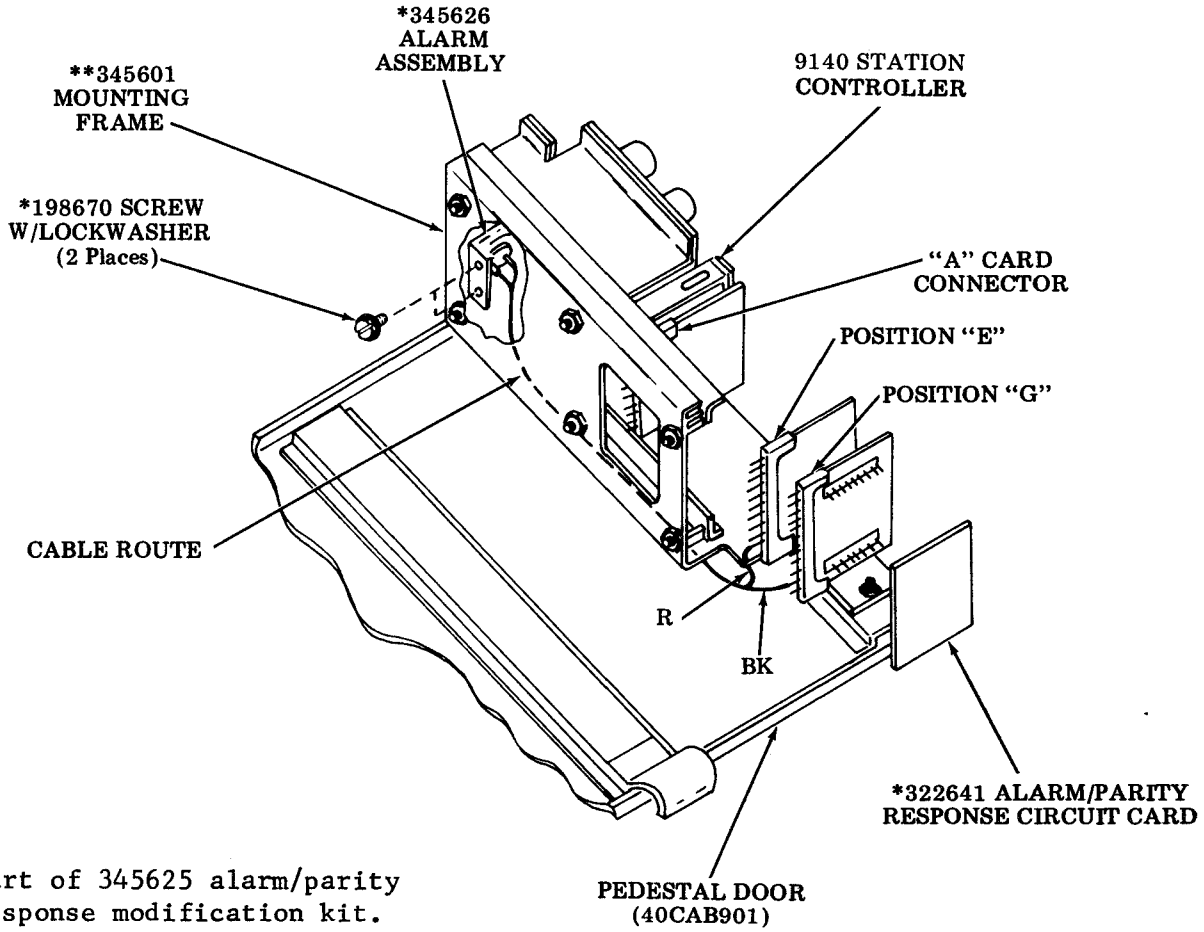

*Part of 345625 alarm/parity response modification kit.
**Part of 345605 mounting frame and power supply assembly.

PART NO.	DESCRIPTION AND PAGE NO.
1170	Screw, 6-32 x 5/16 Flat 51
1263	Screw, 6-32 x 1/4 Fil 57
2191	Lockwasher 55, 56, 57
3598	Nut, 6-40 Hex 50,55,56
3640	Lockwasher 56
7002	Washer, Flat 55,56,57
104216	Resistor, 820 OHM 57
107116	Lockwasher 56
116783	Holder, Fuse 56
117176	Fuse, Sl-Bl 0.5 Amp 51,57
120166	Fuse, 2 Amp 51,56,57
121247	Clamp, 7/16 ID Cable 56
125108	Screw, 6-32 x 3/8 Fil 57
144875	Spacer, Insulator 56
145913	Connector, 25 Pt. Receptacle Type 56
146542	Post Asm 56
148440	Connector, 36 Pt. Circuit Card 56
150040	Screw, 6-40 x 5/8 Fil 57
150687	Stud 50,51,55
151629	Nut, 6-40 Lug 57
151630	Screw, 6-40 x 1/4 Hex 55
151632	Screw, 6-40 x 3/8 Hex 56
151657	Screw, 6-40 x 1/4 Fil 57
151688	Screw, 4-40 x 5/8 Fil 56
151722	Screw, 6-40 x 3/16 Hex 57
152893	Screw, 4-40 x 1/4 Hex 56
153817	Screw, 4-40 x 3/8 Hex 56
158772	Screw, 4-40 x 5/8 Hex 57
159269	Fuse, 3/8 Amp 51,57
177113	Insulator 56
177662	Capacitor, 17,000 MFD 57
181707	Nut, Speed 57
181842	Plate, Fuse 56
181999	Insulator 57
182182	Holder, Fuse 57
182501	Capacitor, 1,500 MFD 57
182523	Clamp, 1-3/8 In ID Mounting 57
182643	Terminal, Plug Type 57
184058	Screw w/Lockwasher, 6-40 x 7/16 Hex 51
185677	Terminal, Receptacle Type 57
185871	Screw w/Lockwasher, 8-32 x 3/8 Hex 49,50,54,55
192007	Terminal, Tab Type 57
192286	Nut, Speed 51
193263	Connector, 72 Pt. Circuit Card 56
198670	Screw w/Lockwasher, 6-40 x 5/16 Hex 51,58
199322	Connector, 6 Pt. Receptacle Type 57
302724	Clamp, Capacitor 57
303734	Card, Circuit 56
303805	Card, Circuit 56
303808	Card, Circuit 52,54
303839	Card, Circuit 56
303863	Card, Circuit 56
303864	Card, Circuit 56
312042	Connector, 4 Pt. Plug 57
318835	Transistor 52,56
320418	Terminal, Ring Type 57
320419	Terminal, Ring Type 57
320420	Terminal, Ring Type 57
322010	Card, Circuit 56
322011	Card, Circuit 56
322013	Card, Circuit 56
322014	Card, Circuit 56
322017	Card, Circuit 56
322018	Card, Circuit 56
322083	Card, Circuit 51,56
322409	Card, Circuit 56
322411	Card, Circuit 56
322442	Card, Circuit 56
322451	Card, Circuit 56
322641	Card, Circuit 51,56,58
322685	Card, Circuit 56
327809	Bushing, Insulating 56
328335	Marker, Identification 56
328336	Marker, Identification 56
328337	Marker, Identification 56
328338	Marker, Identification 56
328339	Marker, Identification 56
328340	Marker, Identification 56
328341	Marker, Identification 56
328342	Marker, Identification 56
328757	Sink, Heat 56
328814	Plate 56
333661	Plate 57
333662	Plate, Connector 57
333663	Bracket, Top 57
333664	Bracket, Bottom 57
333665	Transformer 57
333666	Rectifier 57
333667	Cable Assembly 57

F. DISASSEMBLY/REASSEMBLY AND PARTS (Cont)

4. PARTS -- 9140 STATION CONTROLLER (Cont)

PART NO.	DESCRIPTION AND PAGE NO.
333669	Power Supply 51
333670	Resistor Assembly 57
333671	Bracket 56
333673	Insulator 57
341896	Cable Assembly 49,50
342072	Cable Assembly 55
344545	Cable Assembly 53
344546	Plate 54
344553	Card, Circuit 54
344555	Modification Kit 53
345601	Frame, Mounting 51,55, 58
345603	Cable Assembly 53
345605	Frame w/Power Supply 50, 53,54,55,58
345625	Modification Kit 51,58
345626	Alarm Assembly 51,58
345674	Bracket 51
401640	Cable Assembly 53
401641	Cable Assembly 53

PART 9 -- MODEL 40 CABINETS, PAPER WINDERS, AND FACILITIES

INDEX PAGE

A. GENERAL
1. DESCRIPTION. 2
2. TOOLS AND TEST EQUIPMENT 6

B. SHOP PROCEDURES
1. GENERAL. 6
2. CLEANING AND REFINISHING 7
3. INSPECTION 8
4. CONVERSIONS. 10
5. MARKING AND PACKING. 11

C. TESTING
1. GENERAL. 29
2. VOLTAGE AND CONTINUITY CHECKS. 29

D. TROUBLESHOOTING
1. GENERAL. 32
2. DIAGRAMS (CABINETS). 32
3. CABLE ROUTING. 37
4. TROUBLE ANALYSIS AND DIAGRAMS -- PAPER WINDERS 54

E. ADJUSTMENTS AND LUBRICATION
1. CABINET. 57
2. PAPER WINDER 73

F. DISASSEMBLY, REASSEMBLY, AND PARTS
1. GENERAL. 81
2. CABINETS, PAPER WINDERS, AND FACILITIES. 82
3. NUMERICAL INDEX. 201

PART 9 -- MODEL 40 CABINETS, PAPER WINDERS, AND FACILITIES

A. GENERAL

1. DESCRIPTION

The Model 40 cabinets provide mounting and housing facilities for various Model 40 components. In reviewing the cabinets illustrated in this section, note that many, though similar in size and general appearance, are equipped for different applications in sets and stations. A cabinet related accessory is the 401200 copyholder which mounts on a pedestal-type cabinet top and provides a means for holding pages from which the operator is preparing copy.

The 40PWU101 (for 17 inch wide cabinet) and 40PWU102 (for 20 inch wide cabinet) paper winders mount on friction feed printer cabinets and serve to take up and store single-ply paper issuing from Model 40 friction feed printers. Several paper guide and storage rack combinations are available for handling fanfold page copy issuing from the Model 40 tractor feed printer.

Facilities covered in this section are cable assemblies for interconnecting Model 40 components and the hardware and cables for mounting and connecting to data sets or modems.

The following pages illustrate typical Model 40 cabinets, paper winders, and facilities covered in this part.

NOTE: When ordering replaceable components, unless otherwise specified, prefix each part number with the letters "TP" (ie, TP410055).

Friction Feed Printer Cabinets (Table Top)

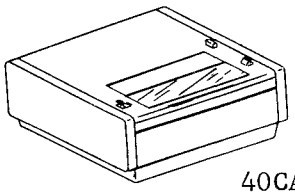

40CAB201/AA
Printer Adjacent

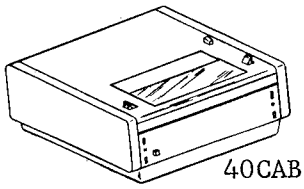

40CAB201/AC
RO Printer

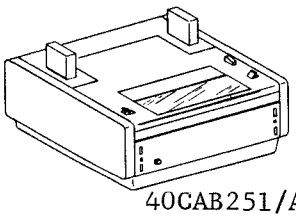

40CAB251/AA
Printer Under Monitor

(Noise Reduced)

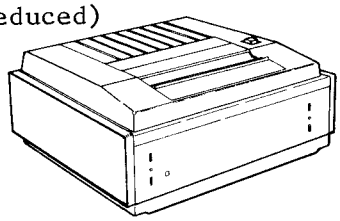

40CAB371/AA
Printer Adjacent

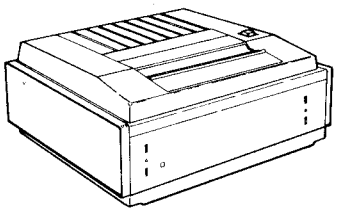

40CAB371/AB
RO Printer W/
Provision for
Integrated Controller

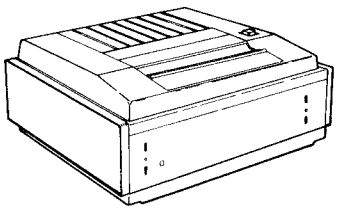

40CAB371/ZZ W/407102
Modification Kit (Used
With 40C103 Controller)

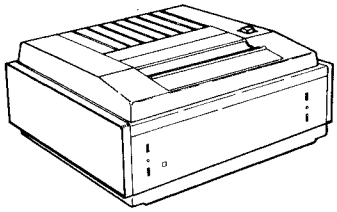

40CAB371/AC
RO Printer for use
in OEM* Applications

*= Original Equipment Manufacturer

Logic and Mounting Cabinets (Table Top)

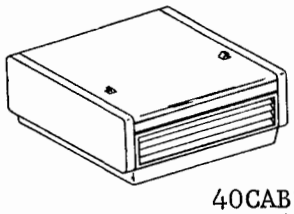

40CAB201/AB
Logic Adjacent

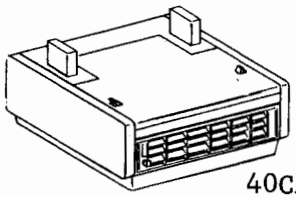

40CAB251/AB
Logic Under Monitor

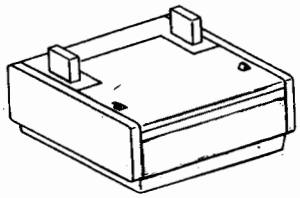

40CAB251/AC Monitor
and Opcon Mounting

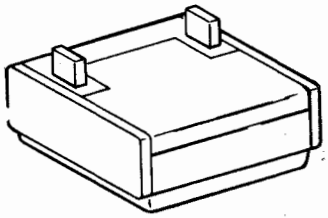

40CAB251/AE
Logic Under Monitor
Single Display

Tractor Feed Printer Cabinets (Table Top) -- 80-Column

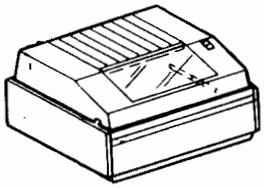

40CAB351/AA
Plain -- No Opcon

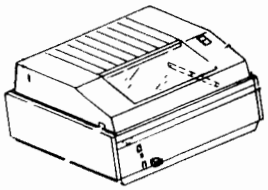

40CAB351/AB
Provision for Opcon

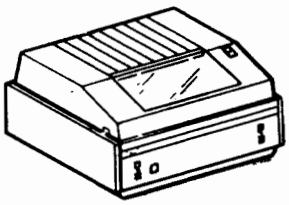

40CAB351/AC RO Printer
W/Provision for Integrated
Controller

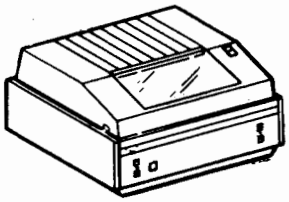

40CAB351/AD
RO Printer for use
in *OEM Applications

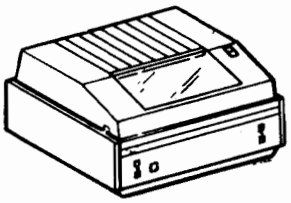

40CAB351/AE RO Printer
W/Provision for Integrated
Controller and Dual EIA Interface

Tractor Feed Printer Cabinets (Table Top) -- 132 Column

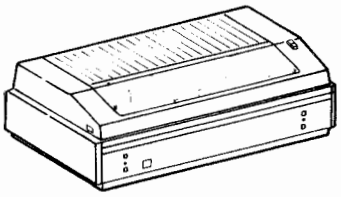

40CAB353/AA RO Printer --
No Opcon

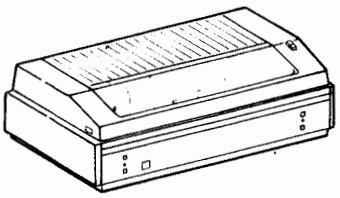

40CAB353/AB RO Printer
W/Provision for Integrated
Controller

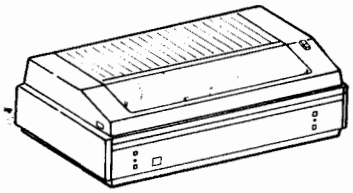

40CAB353/AD RO Printer
W/Provision for
Integrated Controller
and Dual EIA Interface

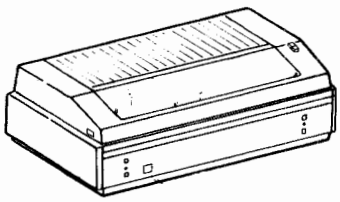

40CAB353/AC RO Printer
for Use in *OEM Applications

A. GENERAL (Cont)

1. DESCRIPTION (Cont)

Pedestals Without Table Tops

CODE	TYPE	WIDTH
40CAB901/AF	RO Printer Terminal -- Contains Logic Module	24"
40CAB901/AG	KDP Terminal -- Contains Logic Module	24"
40CAB901/AH	KD Terminal -- Empty	24"
40CAB901/AJ	AC Facilities and Cable Bracket	24"
40CAB902/AA	RO Tractor Feed Printer Terminal -- Empty	20"
40CAB902/AB	RO Tractor Feed Printer Terminal -- Contains Logic Module	20"
40CAB904	Empty	27"

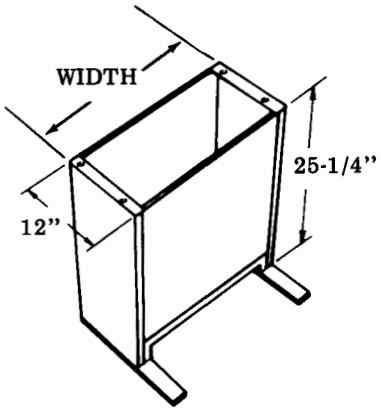

Table Tops for Pedestals

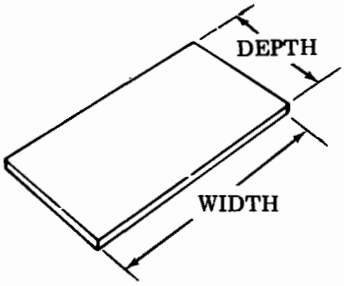

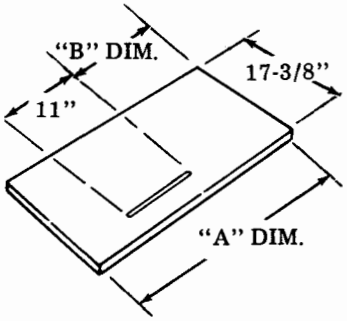

TABLE TOPS FOR PEDESTALS		
PART NO.	WIDTH	DEPTH
401531	24"	17-3/8"
401532	29"	17-3/8"
401533	34"	17-3/8"
411035①	29"	17-3/8"

① Used only on 40CAB904

TABLE TOPS FOR PEDESTALS -- TRACTOR FEED			
PART NO.	"A" DIM.	"B" DIM.	SLOT DIM.
401911②	20"	4-1/2"	11"
401912	31-1/2"	16"	11"
401913	27-1/4"	5"	17"
401914	24-1/2"	7"	11"
401915	39"	17"	17"

② Used only on 40CAB902

Copyholder and Bases

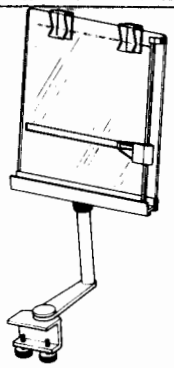

401200
Copyholder

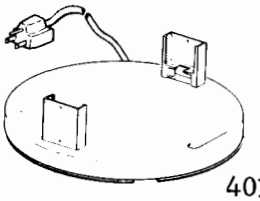

40BSE101
Display Monitor Base

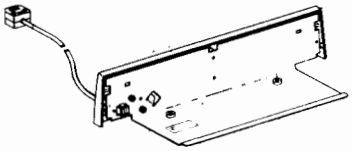

40BSE201
Opcon Base
40BSE202
Wide Opcon Base

Forms Access Printer Cabinet

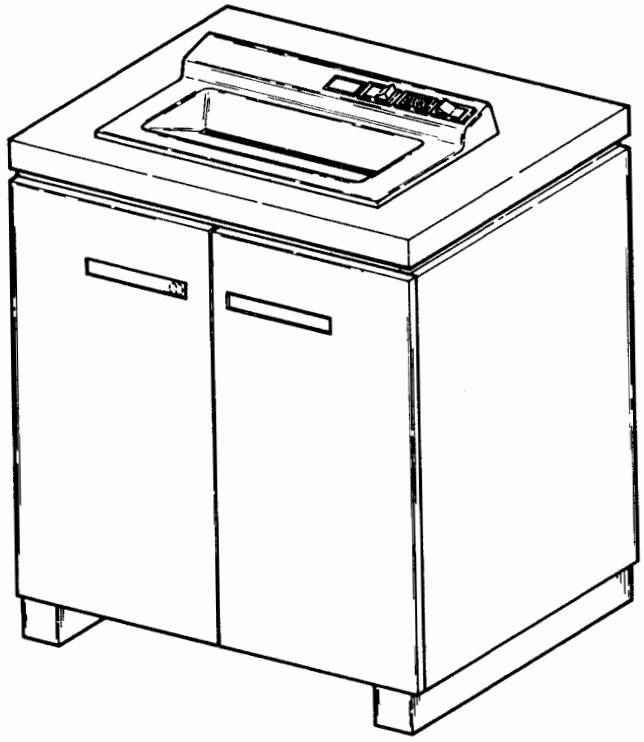

40CAB302/AA -- EIA Interface w/Provision for Mounting Integrated Controller
40CAB302/AB -- SSI Interface
40CAB302/AC for use in OEM Applications.

Paper Winders

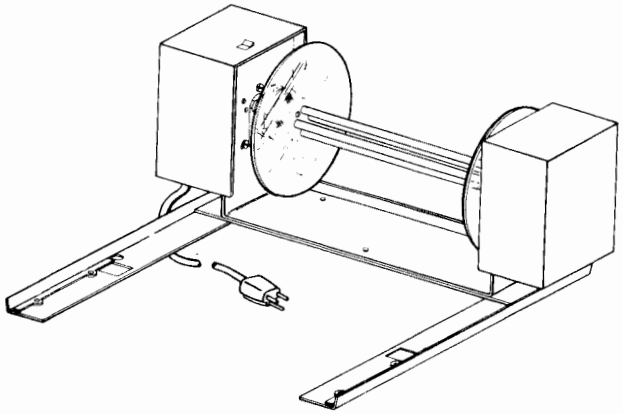

40PWU101 Paper Winder (Early Design)

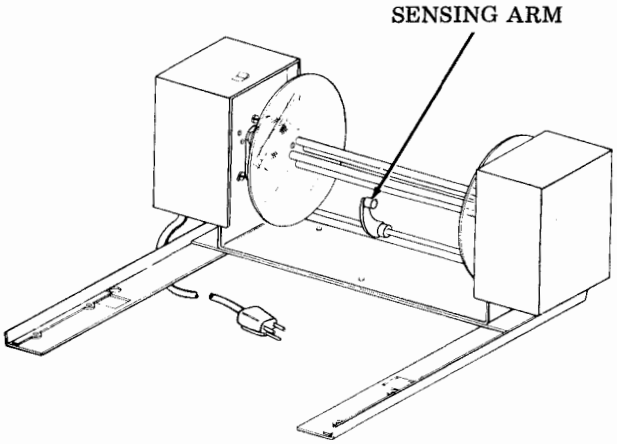

40PWU101 Paper Winder (Late Design) and 40PWU102 Paper Winder

A. GENERAL (Cont)

2. TOOLS AND TEST EQUIPMENT

Tools

The tools listed below are supplementary to common types such as pliers, screwdrivers, etc, and may be procured locally or ordered from Teletype Corporation.

Description	Part No.
•Spring Hook, Pull	75765
•Nut Driver Wrench 1/4 Inch	89954
•Nut Driver Wrench 5/16 Inch	89955
•Nut Driver Wrench 3/16 Inch	125752
•Open-End Wrench 1/4 Inch	129534
•Open-End Wrench 5/16 Inch	152835
•Retaining Ring Pliers	160396
•Terminal Extractor	182697
•Terminal Extractor (Miniature)	402840
•Scale 6 Inch, L.S. Starrett No. 338, or equivalent (procure locally)	
•Soldering Iron, Weller Model W-MCP-750 with MP2C Tip, or equivalent (procure locally)	
•Desoldering Tool, EDSYN Model MMS005 Soldapullt®, or equivalent (procure locally)	
•Soft-Bristle Brush 1/2 Inch (procure locally)	

Test Equipment

•Volt-Ohm-Milliammeter, Triplett Model 630APL, or equivalent (procure locally)

B. SHOP PROCEDURES

1. GENERAL

This section details cleaning, refinishing, and inspection procedures to be followed prior to testing and troubleshooting Model 40 cabinets, pedestals, etc. In many cases careful inspection will save later trouble by revealing defective or damaged cabling, connectors, or other components.

Refer to F. DISASSEMBLY, REASSEMBLY, AND PARTS whenever detailed information on removing assemblies or parts is required.

The packing materials described in this section are designed for protection against damage from rough handling in shipping.

2. CLEANING AND REFINISHING

Cleaning

Immersion type cleaning is NOT recommended for Model 40 cabinets, pedestals, paper winders, or facilities.

CAUTION: AVOID THE USE OF HARSH OR ABRASIVE CLEANING AGENTS OR SOLVENTS WHICH COULD SCRATCH OR DAMAGE EXTERIOR PLASTIC OR PAINTED SURFACES.

Cleaning can be accomplished as follows:

Exterior Surfaces -- Wash and Wipe Dry. Interior Surfaces -- Vacuum or Air Dust.

Clean all surfaces as indicated.

Exterior Surfaces

a. Wash with mild detergent solution.
b. Rinse with damp cloth.
c. Buff dry with soft cloth.

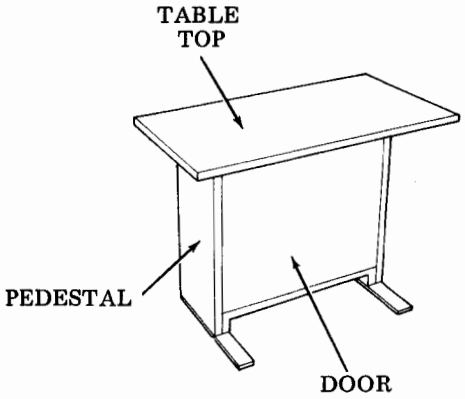

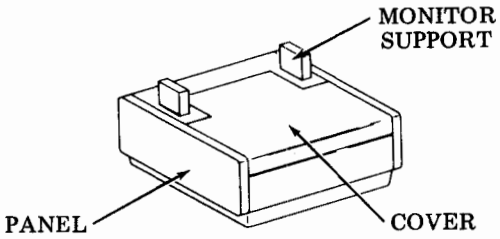

Interior Surfaces

a. Remove large particles or foreign objects by hand.
b. Lightly brush with a clean, dry 1/2-inch brush and follow with air blowing or vacuum cleaning.

CAUTION: THE AIR SUPPLY SHOULD NOT EXCEED 20 PSI. HIGHER AIR PRESSURES MAY DAMAGE SMALL COMPONENTS.

c. Dust all corners, crevices, fan screens, louvers, duct and ventilation openings.

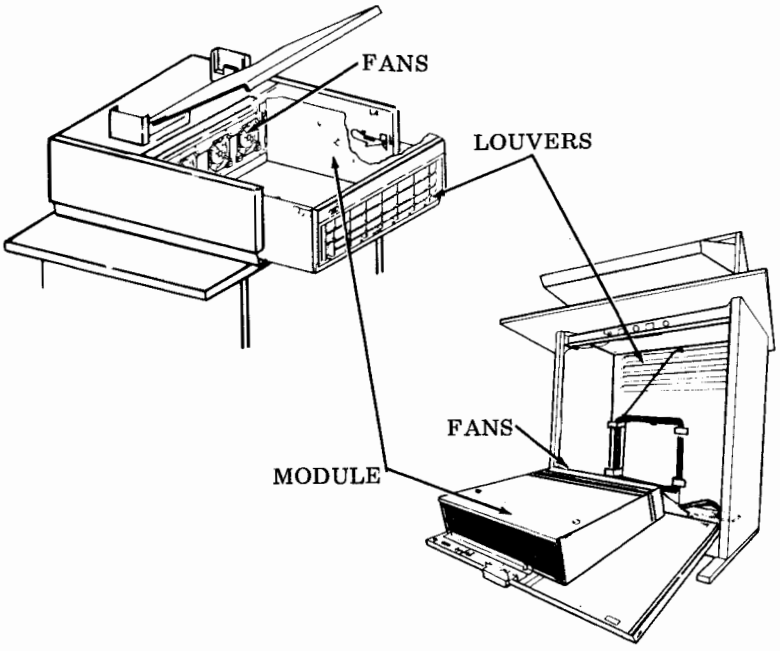

B. SHOP PROCEDURES (Cont)

2. CLEANING AND REFINISHING (Cont)

Refinishing

Scuffed or scratched painted surfaces may be touched up with air-dry brush lacquer. Matching lacquer may be ordered from Teletype Corporation. Specify: 344963 (KB) Black Spattered Texture Brushing Lacquer.

3. INSPECTION

Ground Straps

NOTE: See D. 3. CABLE ROUTING for location of ground straps.

Verify that cabinet or pedestal ground straps are in good condition and securely fastened at each end. To check electrically, measure continuity between connected parts with multimeter set on R X 1 scale. The reading must be essentially zero ohms.

Warning Labels

Check for the presence and legibility of all warning labels.

All
40CAB351 and
40CAB353 Cabinets

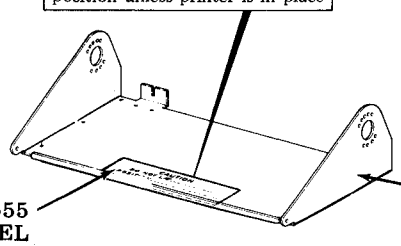

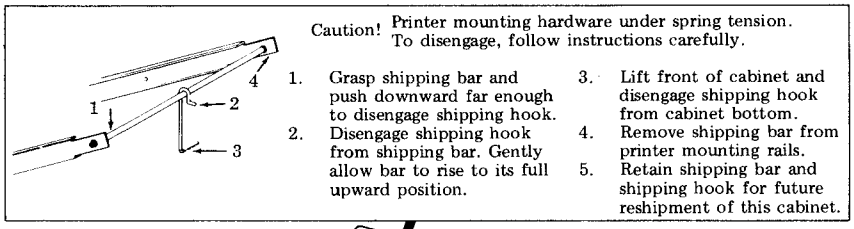

[redacted]

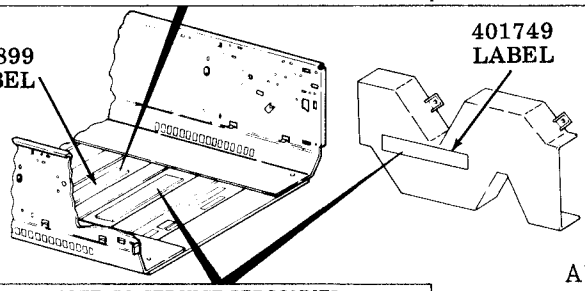

(Used on early design units; on later design units information stamped on.)

40CAB201/AA, AC
40CAB251/AA
and
All 40CAB371 Cabinets

NOTE TO SERVICE PERSONNEL

Cover Interlock Disconnects Motor Relay Control Only.

To Disconnect Primary AC Power, Operate the Switch at the Left Rear of the Printer Cabinet.

All 40CAB351 and
40CAB353 Cabinets
(View of Duct Under Cover)

Warning Labels (Cont)

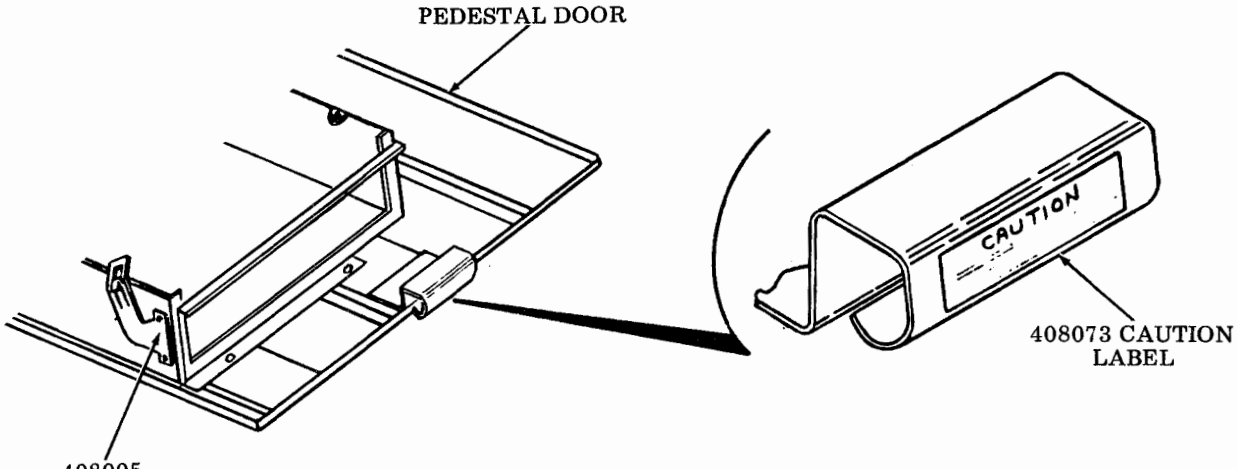

A11 40CAB901 Cabinets with Logic Module

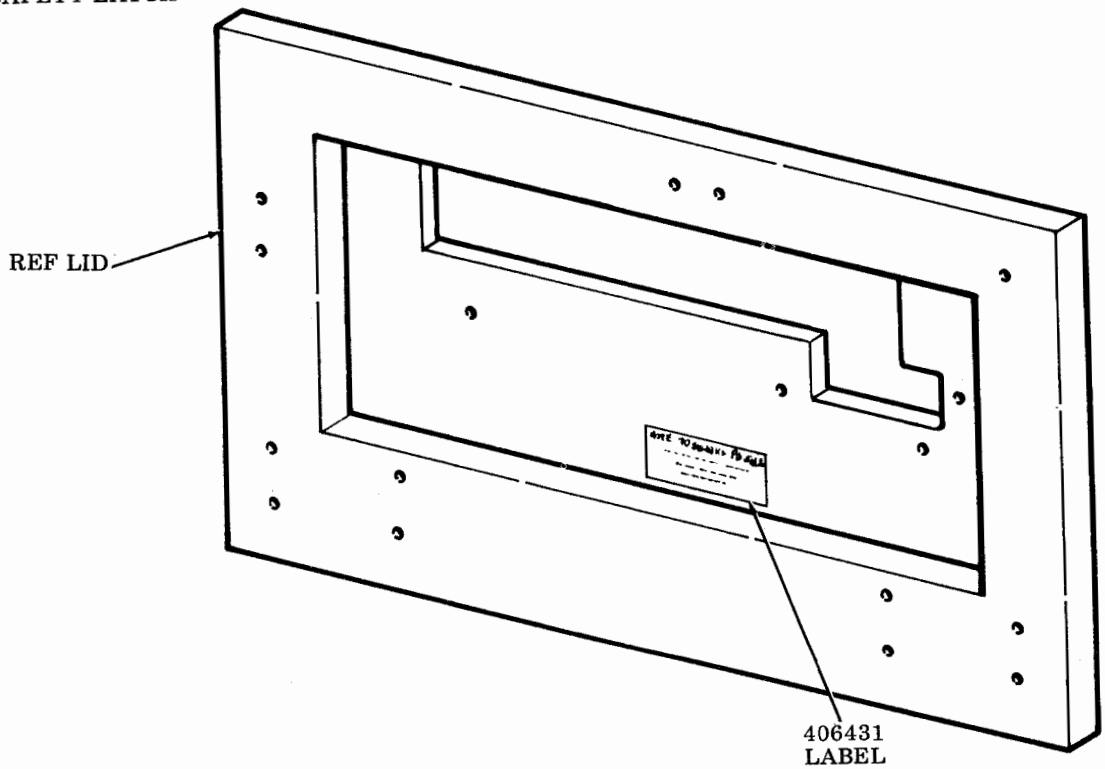

NOTE TO SERVICE PERSONNEL

Cabinet interlocks disconnect motor relay control only. To disconnect primary ac power, operate the switch on the cabinet top.

A11 40CAB302 Forms Access Printer Cabinets

B. SHOP PROCEDURES (Cont)

3. INSPECTION (Cont)

Mechanical Checks

Check all doors and panels for proper opening and closing without binds or interferences and for proper alignment.

Check all latches, hinges, Interlock switches, etc, for proper alignment of mating surfaces.

Check all slides, guides, and mounting surfaces for proper alignment and configuration.

Check for the presence and proper condition of all feet, bumpers, and padding. All padding should adhere and conform to cabinet interior surfaces.

Check fan assemblies for free rotation and no binding of any sort.

Check that two spindles of paper spool are mated and that spool is seated properly and engages with drive clutch.

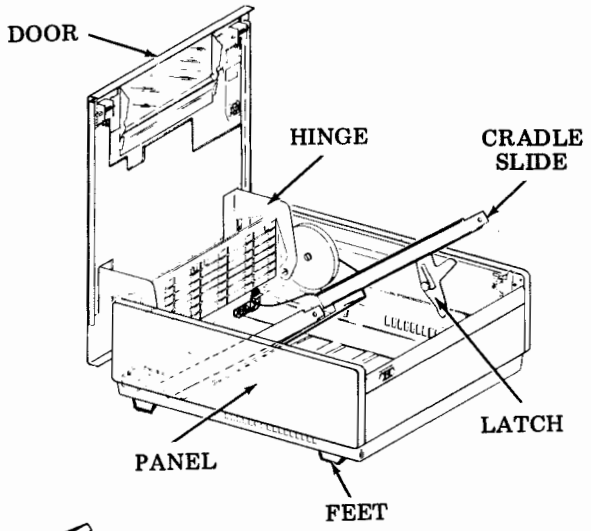

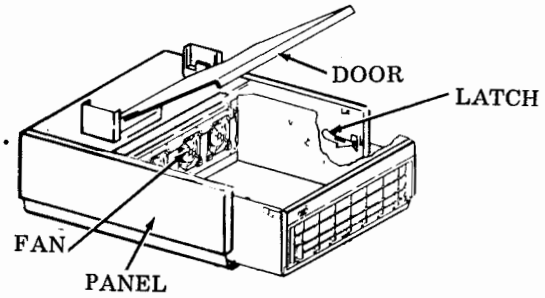

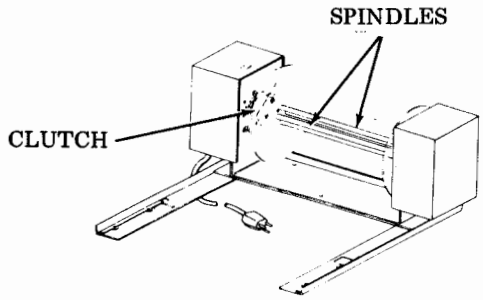

4. CONVERSIONS

Cabinets or pedestals may be converted to types having different features and functions. This will ordinarily require removal and/or addition of certain components, cables, assemblies, or modification kits. Refer to F. DISASSEMBLY, REASSEMBLY, AND PARTS for detailed part numbered views of various cabinets, pedestals and related apparatus. Also see A. GENERAL for dimensional data on pedestals and available table tops.

5. MARKING AND PACKING

Marking

For record keeping purposes, the repair date may be marked in REPAIR MARK designated areas.

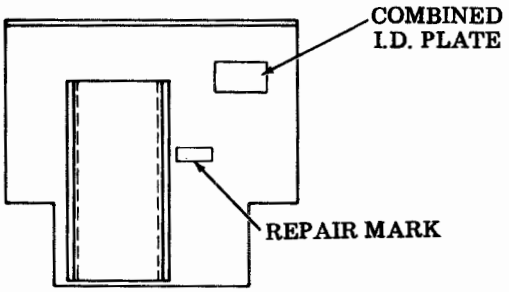

40CAB251/AB, AC, AE
(Viewed From Underside of Door)

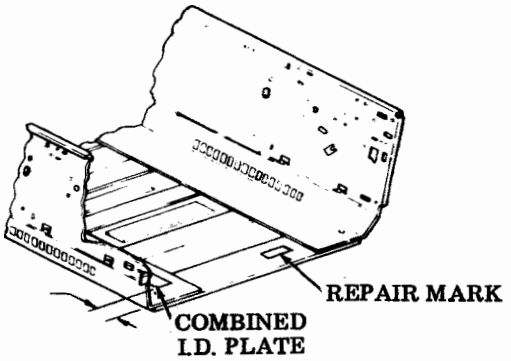

40CAB201/AA, AC
40CAB251/AA
(Viewed From Front of Unit)

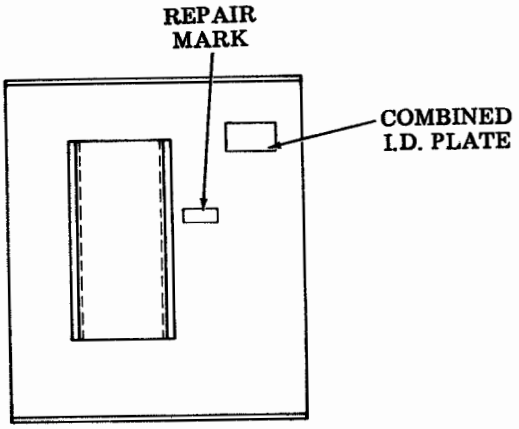

40CAB201/AB
(Viewed From Underside of Door)

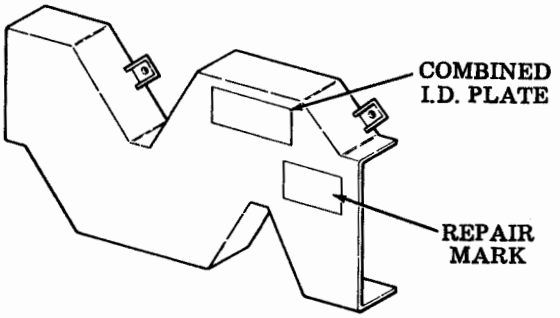

40CAB351/AA, AB, AC, AD, AE
40CAB353/AA, AB, AC, AD
(View of Duct With Cover Open)

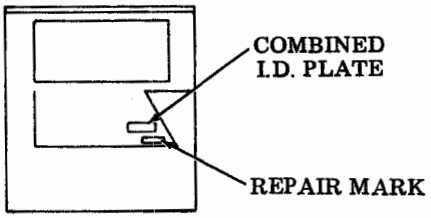

40CAB371/AA, AB, AC
(Viewed From Underside of Door)

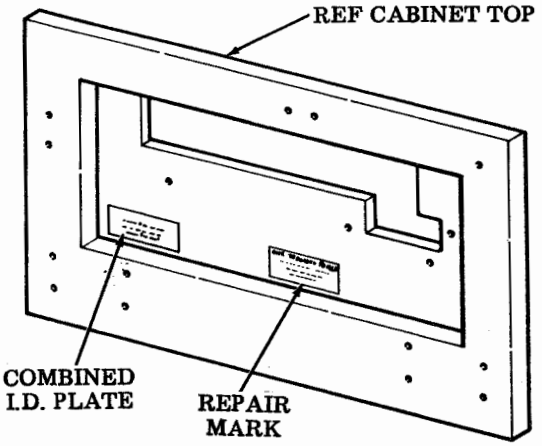

40CAB302/AA, AB, AC

B. SHOP PROCEDURES (Cont)

5. MARKING AND PACKING (Cont)

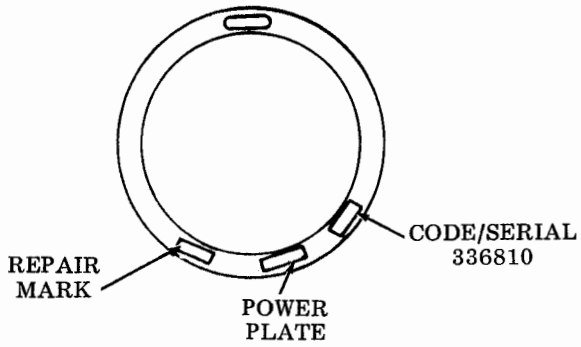

BSE 101 MONITOR BASE
(Bottom View)

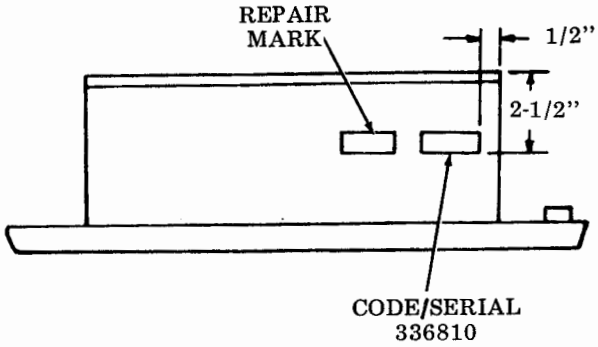

BSE201 and 40BSE202 (Wide Opcon) Base
(Top View)

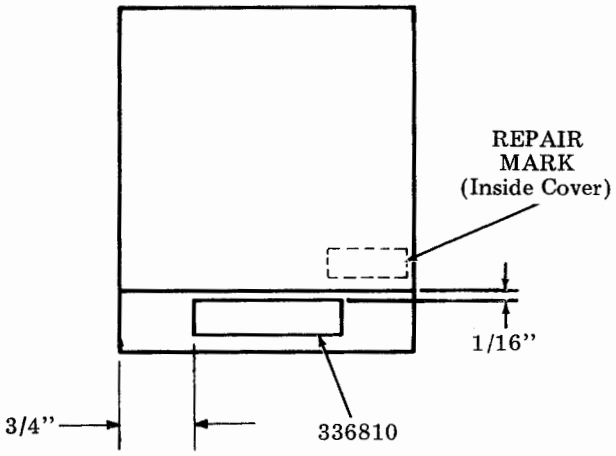

40PWU101 and 40PWU102
PAPER WINDER
(Side View -- End Opposite Motor)

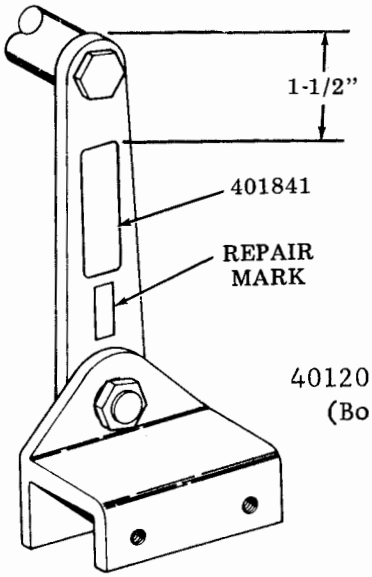

401200 COPYHOLDER
(Bottom View)

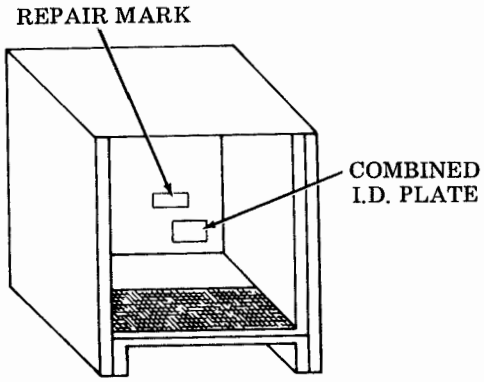

40CAB901/AA to AJ

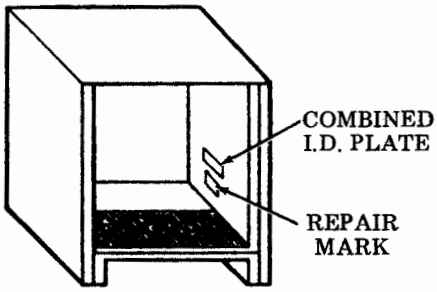

40CAB902/AA, AB
40CAB904/AA

Packing

Factory-type packing may be duplicated by ordering materials listed for each group of equipment and applying as described. PK designated items are available from Teletype Corporation.

40CAB201/AA, AB, AC
40CAB251/AA, AB, AC, AE

Materials Required

Qty		
1	9867PK	Corrugated Carton
1	28218PK	Set of Details
1	28130PK	Unpacking Instruction Label
1	23457PK	Plastic Bag
1	TC-113	Unpacking Instruction Sheet (See Note.)

Qty		
1	401842	Shipping Bar (See Note.)
1	401844	Shipping Hook (See Note.)
	21719PK	Tape (as required)
	21480PK	Tape (as required)

NOTE: Required for 40CAB201/AA, AC, 40CAB251/AA and 371/AA, AB and AC only. Install 401842 shipping bar and 401844 shipping hook as shown. Fold copy of TC-113 Unpacking Instruction Sheet around shipping bar and fasten with 21480PK tape. TC-113 Unpacking Instruction Sheet (following page) may be duplicated locally.

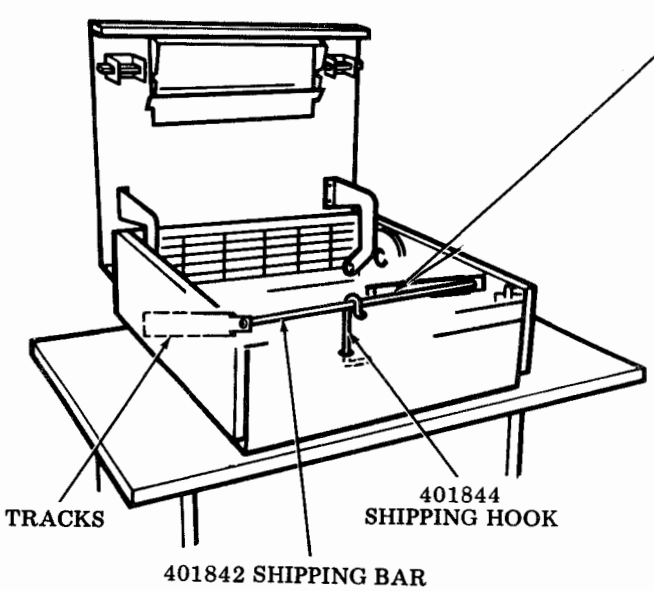

Install and press down on 401842 bar. Attach hook, then release track up slowly. Note that 401844 shipping hook fits in hole in cabinet bottom. Close and latch cabinet cover.

B. SHOP PROCEDURES (Cont)

5. MARKING AND PACKING, Packing (Cont)

CAUTION

READ BEFORE COMPLETING UNPACKING OPERATIONS

PRINTER MOUNTING HARDWARE UNDER SPRING TENSION

TO DISENGAGE, PERFORM THE FOLLOWING STEP BY STEP INSTRUCTIONS.

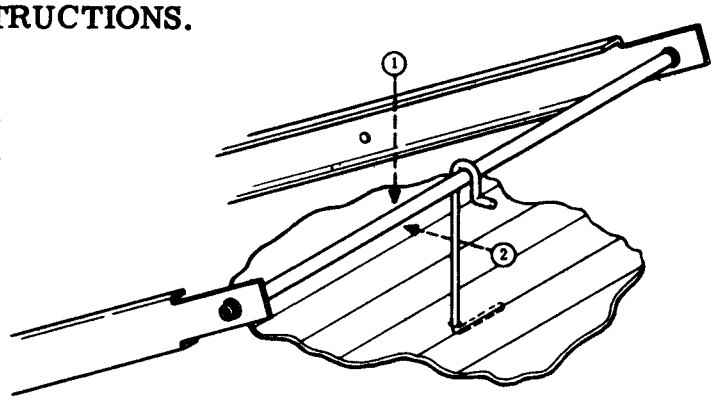

1. **Grasp shipping bar and push downward far enough to disengage shipping hook.**

2. **Disengage shipping hook from shipping bar. Gently allow bar to rise to its full upward position.**

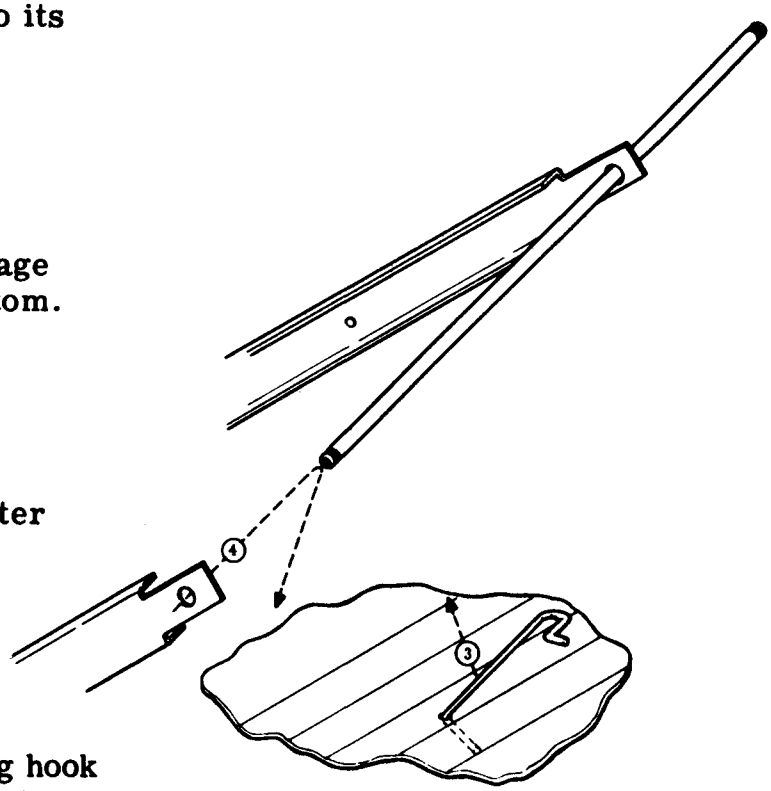

3. **Lift front of cabinet and disengage shipping hook from cabinet bottom.**

4. **Remove shipping bar from printer mounting rails.**

5. **Retain shipping bar and shipping hook for future reshipments of this cabinet.**

40CAB201/AA, AB, AC
40CAB251/AA, AB, AC, AE

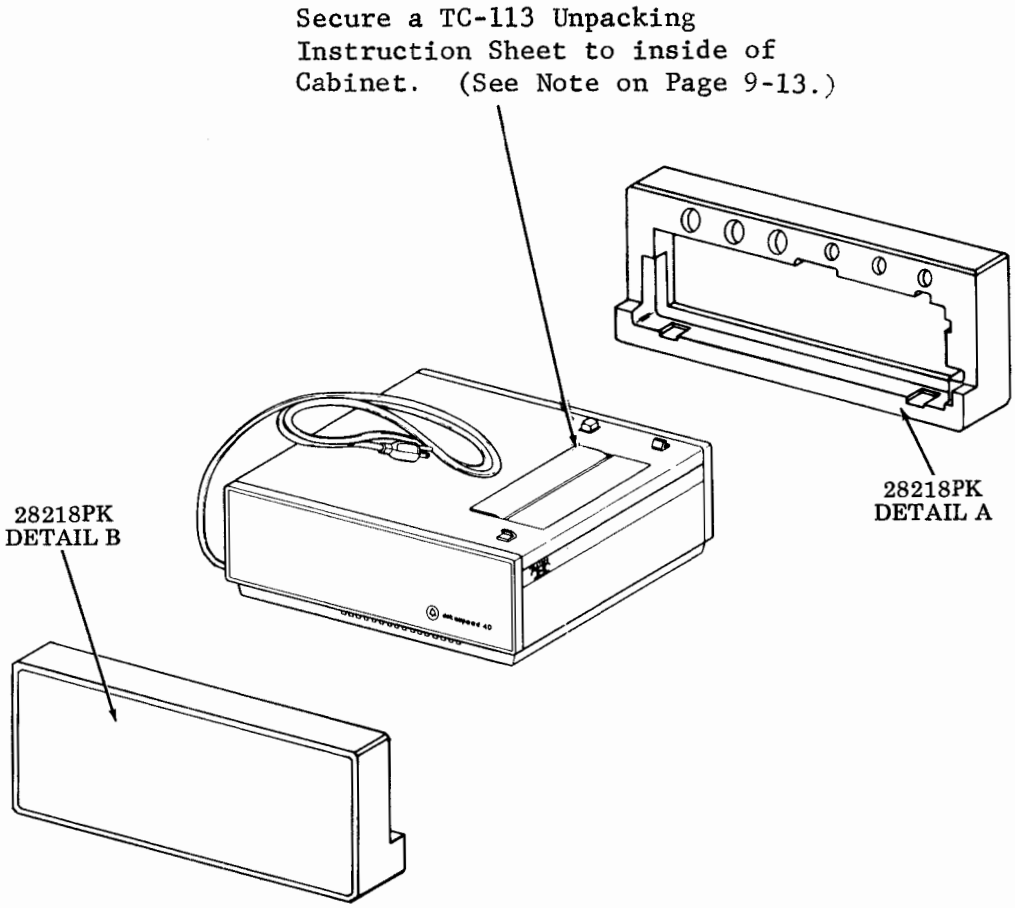

NOTE: 23457PK plastic bag deleted for clarity

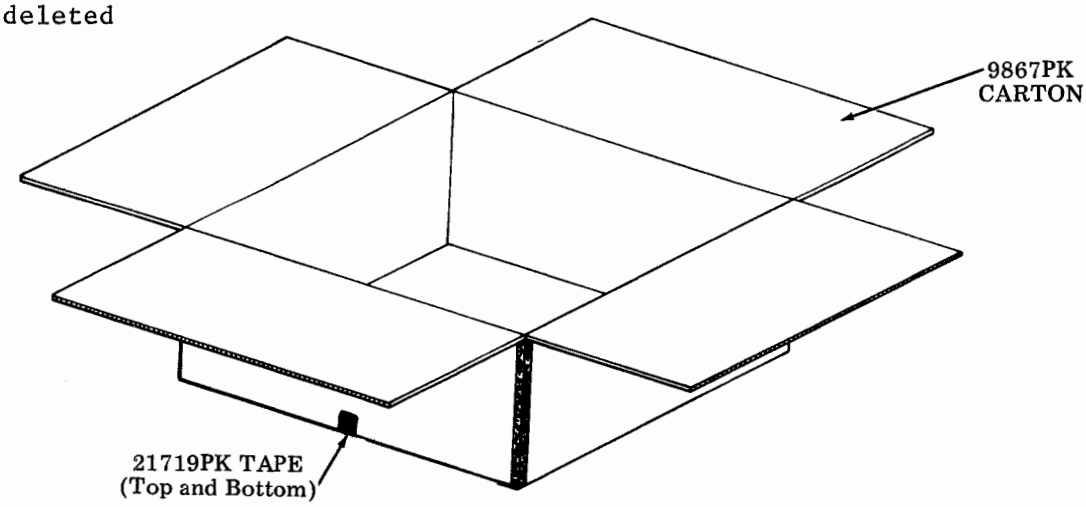

Secure a 28130PK unpacking instruction label to center of one top flap of carton.

B. SHOP PROCEDURES (Cont)

5. MARKING AND PACKING, Packing (Cont)

40CAB351/AA, AB, AC, AD, AE and 40CAB371/AA, AB, AC

Materials Required

Qty			Qty		
1	10532PK	Corrugated Carton	1	23457PK	Plastic Bag
1	28186PK	Cushioning Detail	1	28130PK	Unpacking Instruction Label
1	28187PK	Corrugated Liner		21719PK	Tape (as required)
1	28188PK	Top Detail		21632PK	Tape (as required)

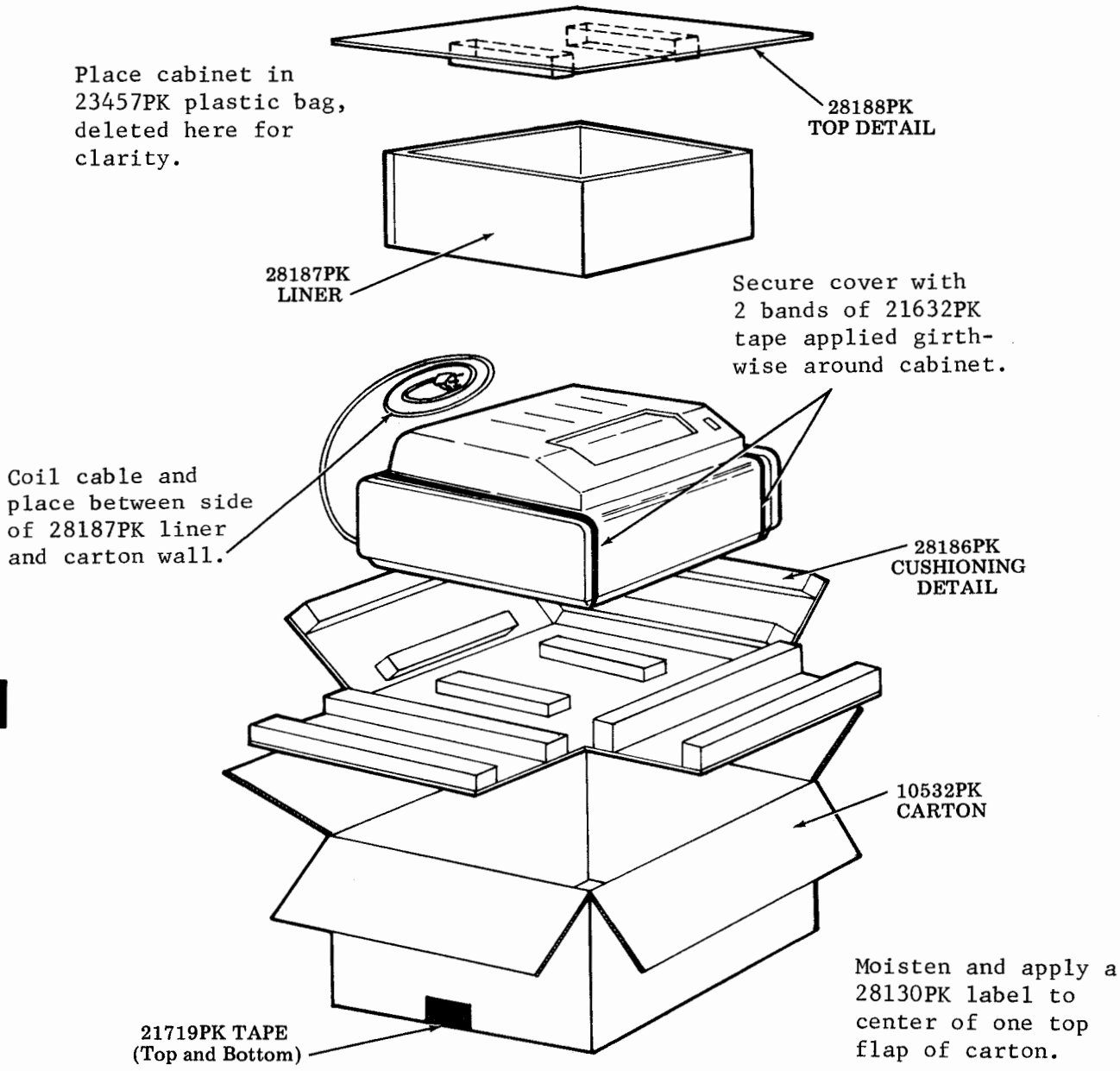

40CAB353/AA, AB, AC, AD

Materials Required

Qty			Qty		
1	10672PK	Corrugated Carton	1	23461PK	Plastic Bag
1	28224PK	Cushioning Detail	1	28130PK	Unpacking Instruction Label
2	28225PK	Cushioning Detail		21719PK	Tape (as required)
1	28227PK	Corrugated Liner		21632PK	Tape (as required)
1	28226PK	Top Detail			

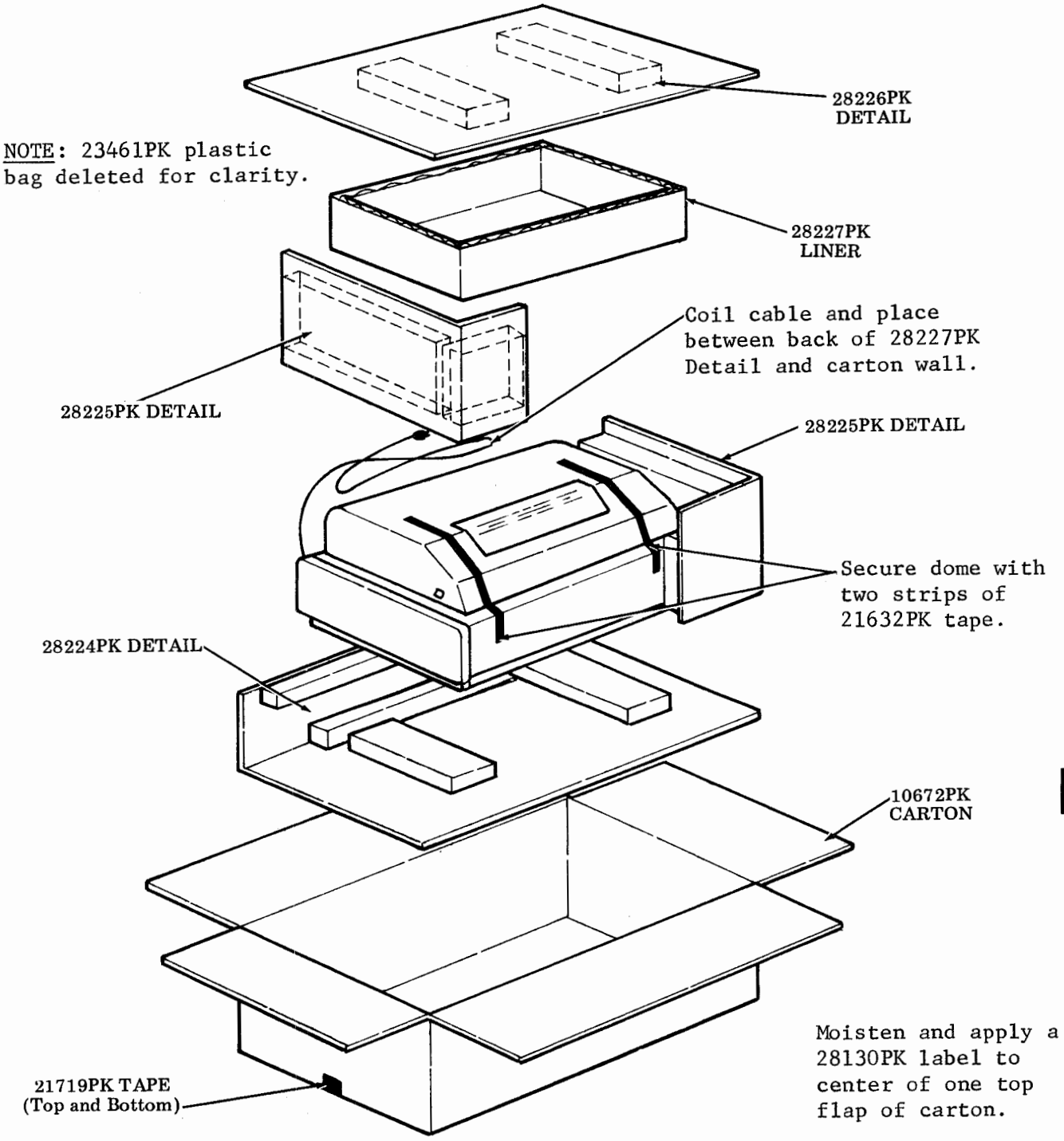

B. SHOP PROCEDURES (Cont)

5. MARKING AND PACKING (Cont)

Packing (Cont)

40CAB302/AA, AB, AC

Qty	Materials Required	As Required
1	16937PK Detail A Bottom End Cap	21632PK Tape
1	16937PK Detail B Bottom Cushion Cap	21719PK Tape
1	16937PK Detail C Top Cushion Cap	21207PK Strapping
1	16937PK Detail D Carton	21431PK Clip Seal
1	23461PK Plastic Bag	

NOTE: Interlock flanges of bottom end cap with corrugated carton flanges. Apply a band of 21207PK Strapping girthwise around center of flanges of end cap. Seal strapping with one 21431PK clip seal. The tension of strapping should be sufficiently tight to bite into corners so that strapping will not shift.

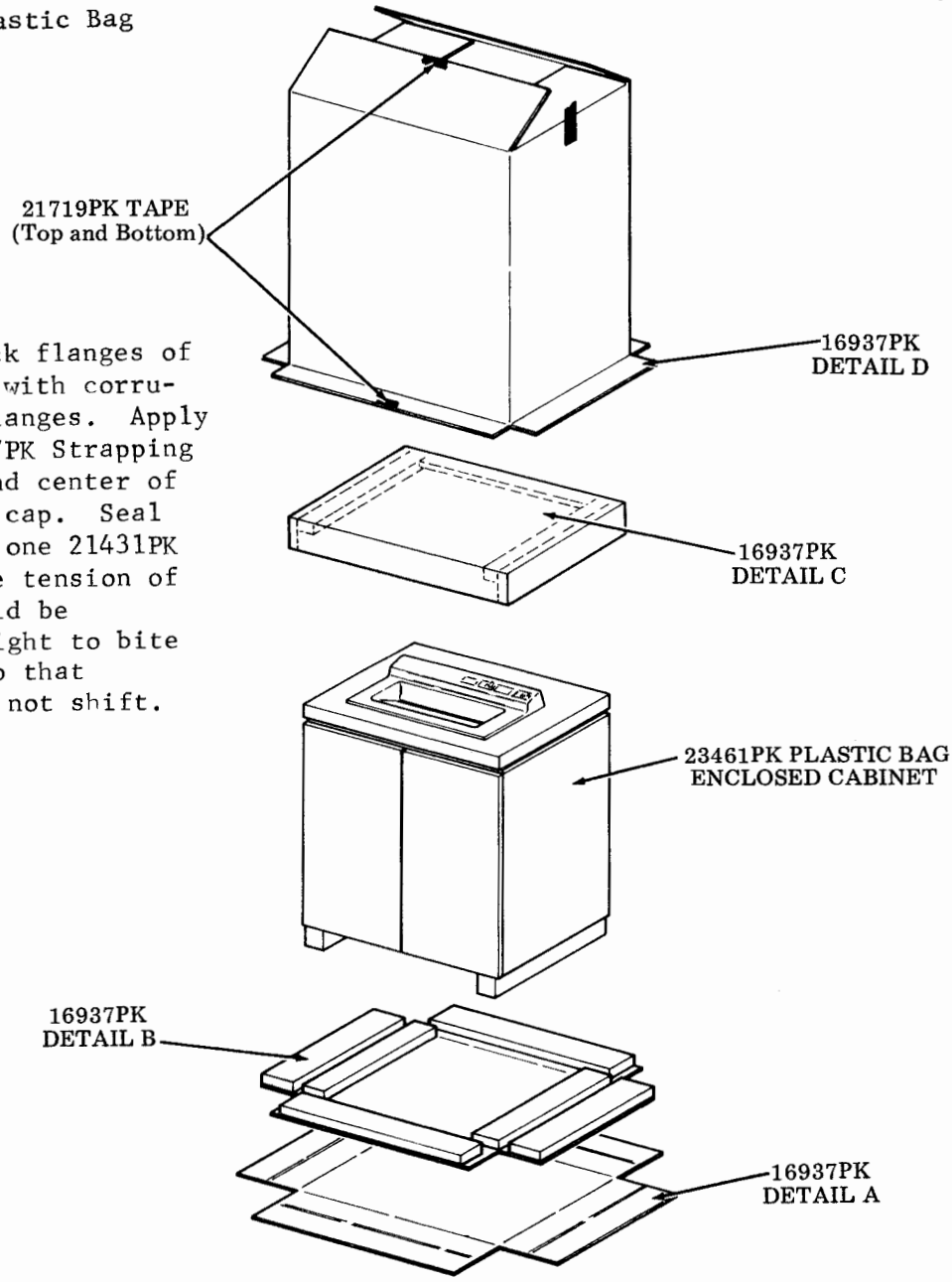

40CAB901/AF, AG, AH

Qty	Materials Required	As Required:
1	70133PK Detail A Carton	
1	70133PK Detail B End Cap	
1	23461PK Plastic Bag	
1	28253PK Polystyrene Detail A	21719PK Tape
1	28253PK Polystyrene Detail B	
2	28253PK Polystyrene Detail C	

NOTE: 23461PK Plastic Bag deleted for clarity.

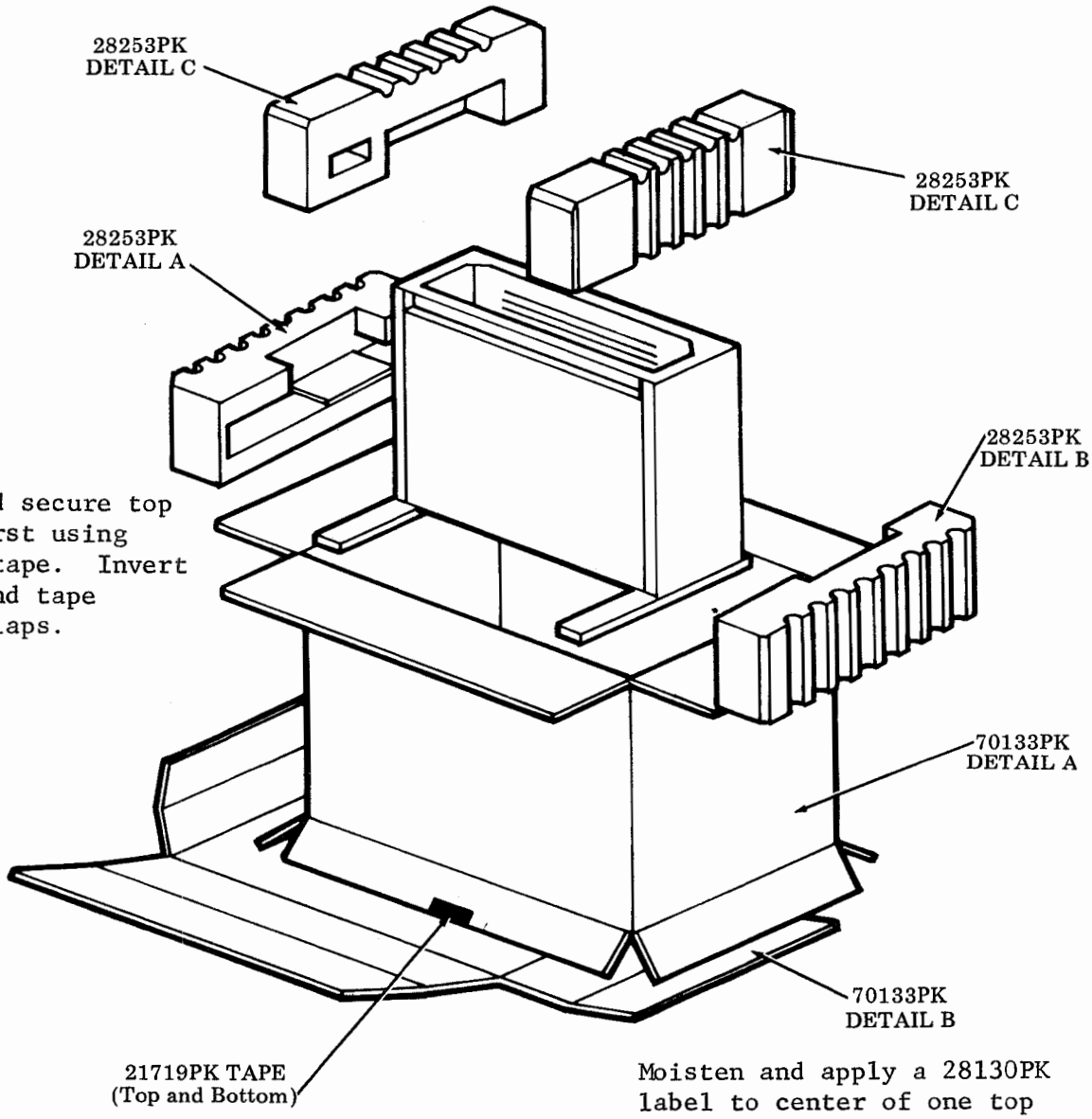

Close and secure top flaps first using 21719PK tape. Invert carton and tape bottom flaps.

Moisten and apply a 28130PK label to center of one top flap of carton.

B. SHOP PROCEDURES (Cont)

5. MARKING AND PACKING (Cont)

Packing (Cont)

40CAB901/AJ

Materials Required

Qty	
1	11946PK Corrugated Carton
8	27442PK Plastic Corners
1	23461PK Plastic Bag

As Required:
21719PK Tape

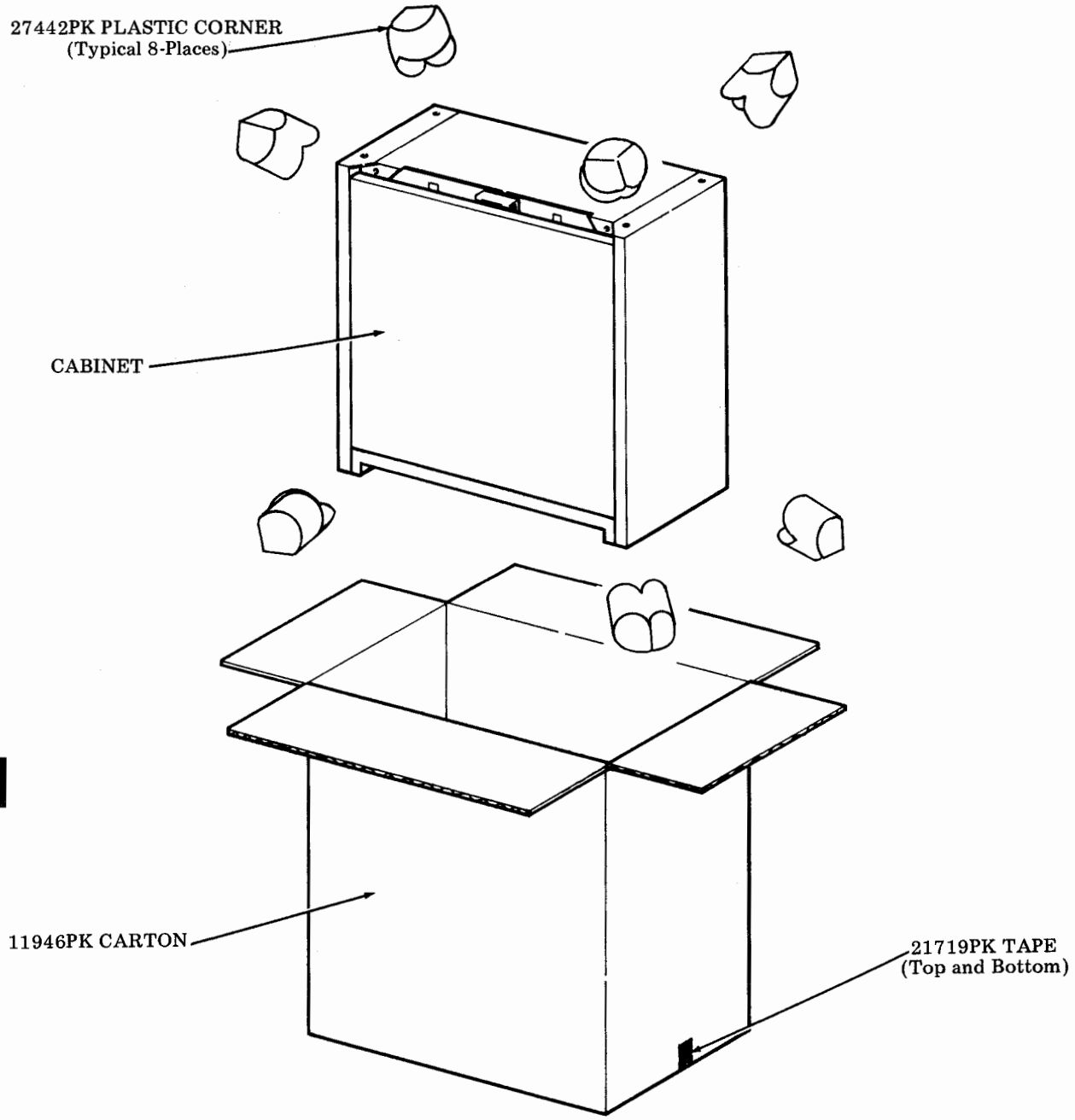

40CAB902/AA, AB

Qty	Materials Required
1	70144PK Detail A Carton
1	70144PK Detail B End Cap
1	23461PK Plastic Bag
1	28253PK Polystyrene Detail A
1	28253PK Polystyrene Detail B
2	28253PK Polystyrene Detail C

As Required:

21719PK Tape

NOTE: 23461PK Plastic Bag deleted for clarity.

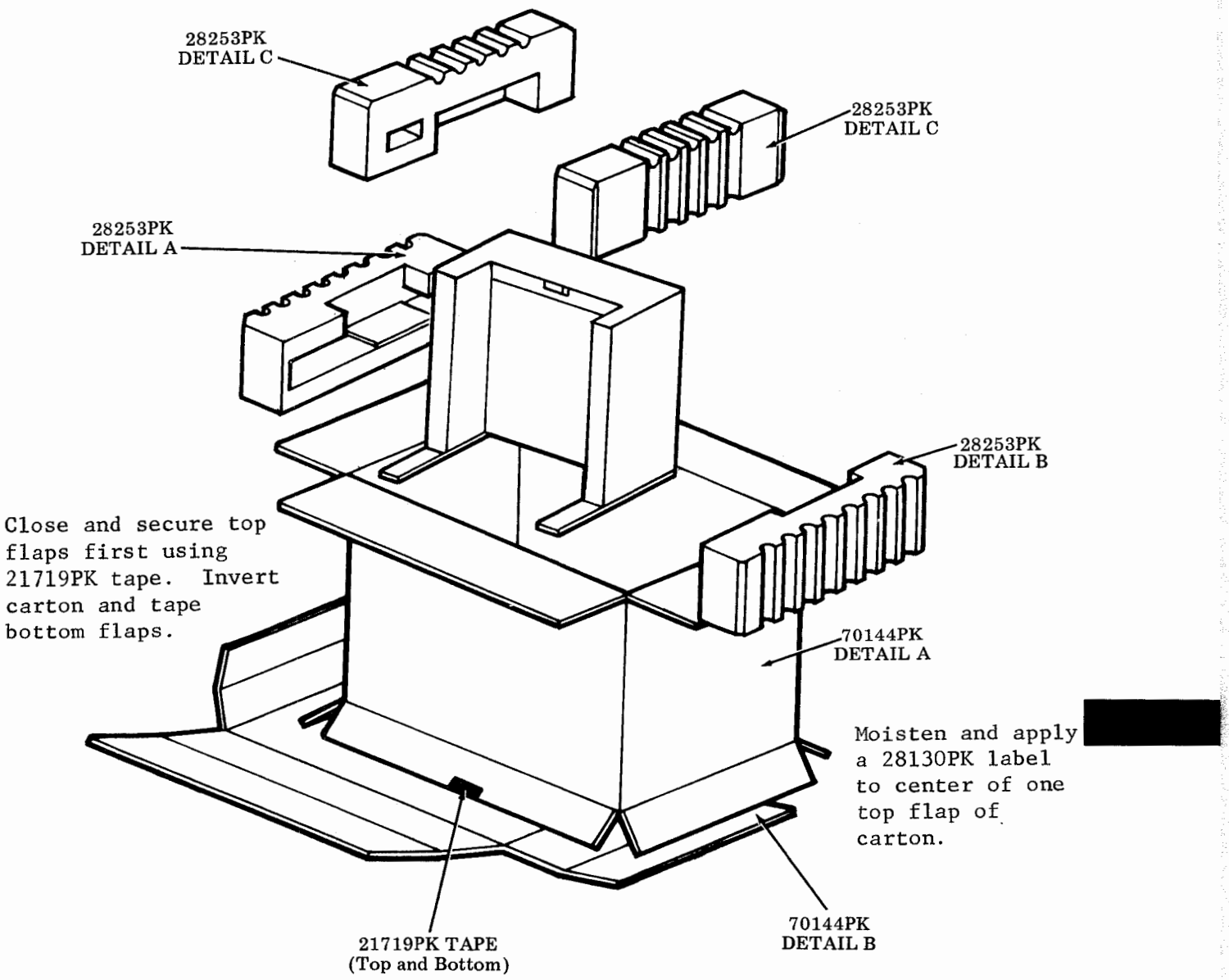

B. SHOP PROCEDURES (Cont)

5. MARKING AND PACKING (Cont)

40CAB904/AA

Qty	Materials Required	As Required
1	12005PK Corrugated Carton	
2	28185PK Set of Details	
1	23461PK Plastic Bag	21719PK Tape
1	27542PK Label	21632PK Tape
1	28223PK Corrugated Detail	

NOTE: 23461PK plastic bag deleted for clarity.

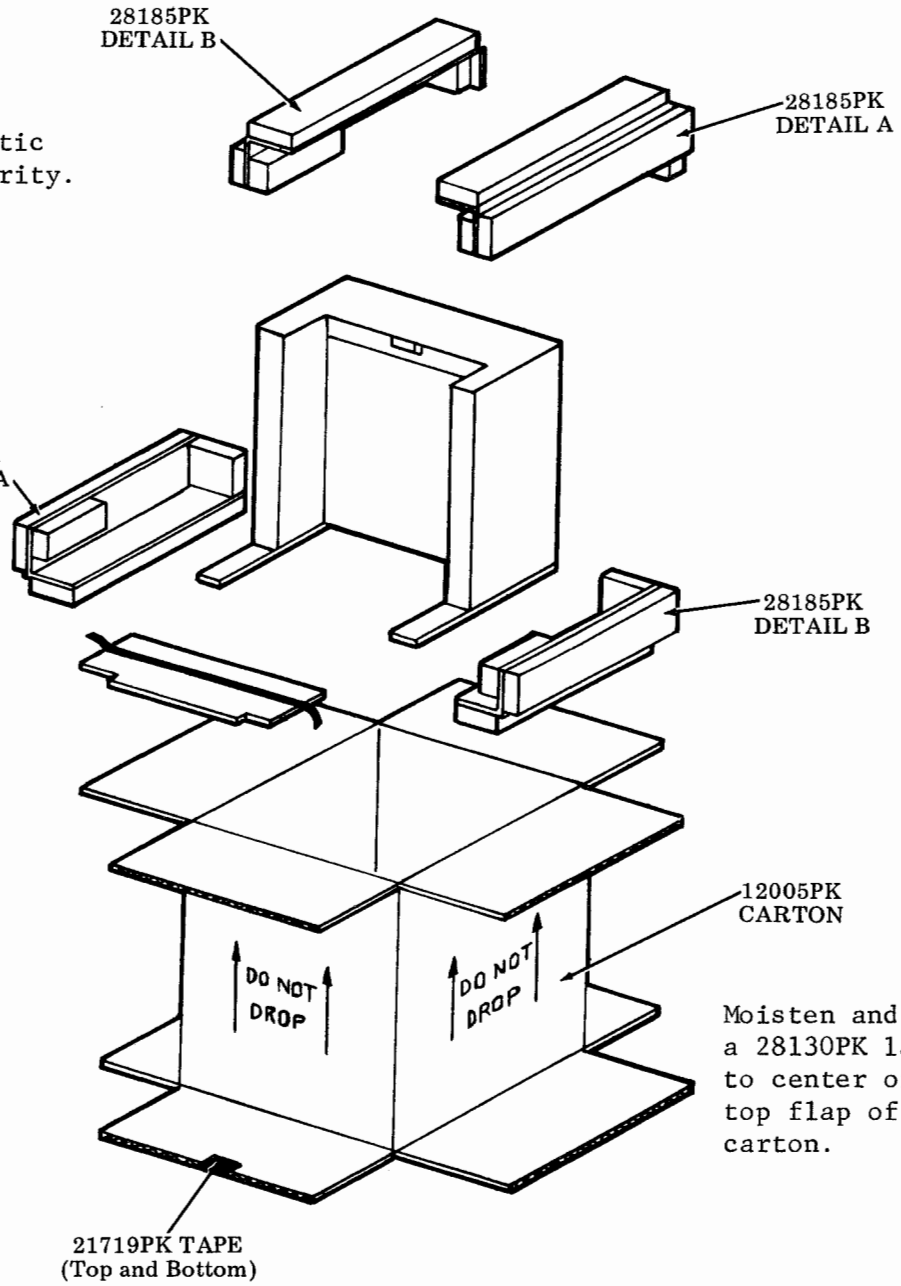

Secure 28223PK detail to cabinet legs with 21632PK tape.

Moisten and apply a 28130PK label to center of one top flap of carton.

Model 40 Table Tops

Materials Required

Qty			Qty		
1	8564PK	Corrugated Folder (See Note 1.)	1	23451PK	Plastic Bag (See Note 1.)
1	8565PK	Corrugated Folder (See Note 2.)	1	23457PK	Plastic Bag (See Note 2.)
			2	28214PK	Wood Details (See Note 3.)
				21719PK	Tape (as required)
			1	28254PK	Wood Detail (See Note 4.)

NOTE 1: Required for 401532, 401533, 401912, and 401913.

NOTE 2: Required for 401530, 401531, 401911, and 401914.

NOTE 3: Required for 401911.

NOTE 4: Required for 401913.

Place table top in 23451PK or 23457PK plastic bag, deleted here for clarity. (See Notes 1 and 2.)

Seal corrugated folder with 21719PK tape.

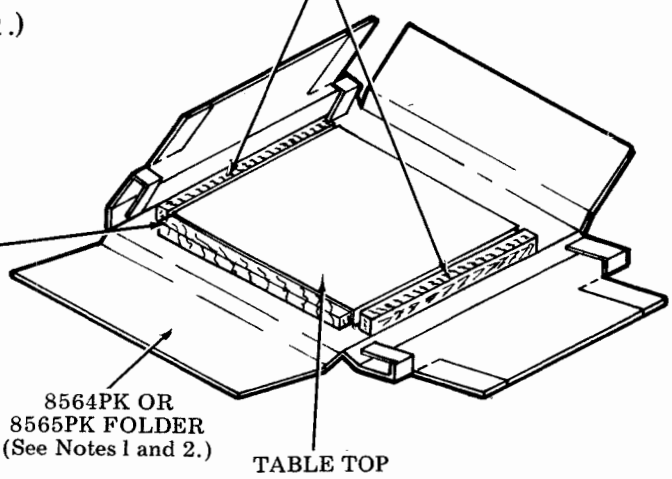

B. SHOP PROCEDURES (Cont)

5. MARKING AND PACKING (Cont)

Model 40 Table Tops (Cont)

401915

Qty	Materials Required
1	8573PK Folder (Two Piece)
2	28214PK Wood Details
1	23464PK Plastic Bag
1	27643PK Label

As required 21719PK Tape.

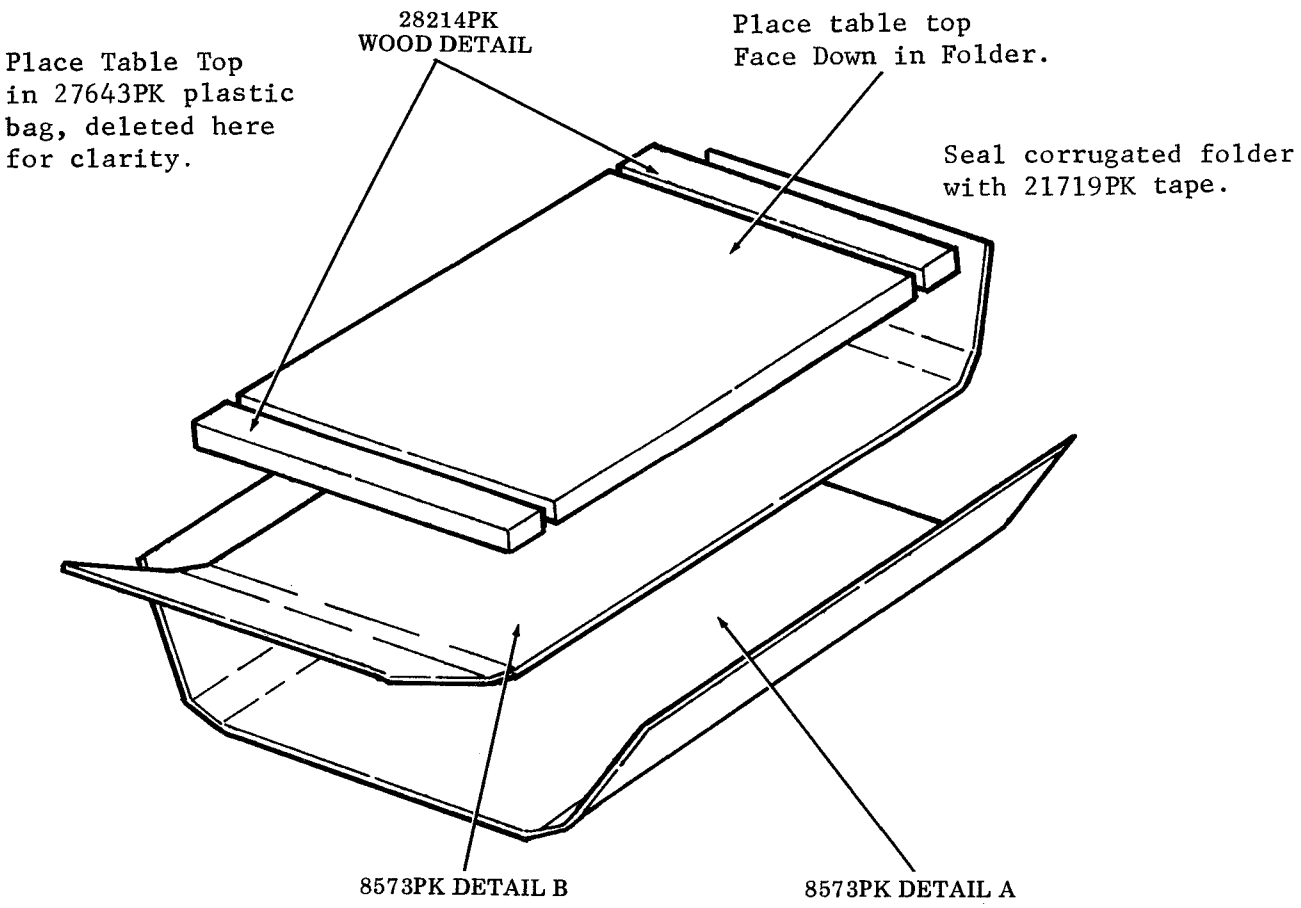

40PWU101, 40PWU102 Paper Winder

Materials Required

Qty		
1	9644PK	Corrugated Carton
1	8563PK	Corrugated Folder
1	28192PK	Corrugated Detail
1	28193PK	Corrugated Detail
1	23457PK	Plastic Bag

Qty		
1	21307PK	Muslin Bag
	21719PK	Tape (as required)
	21632PK	Tape (as required)
	21298PK	Tissue Paper (as required)

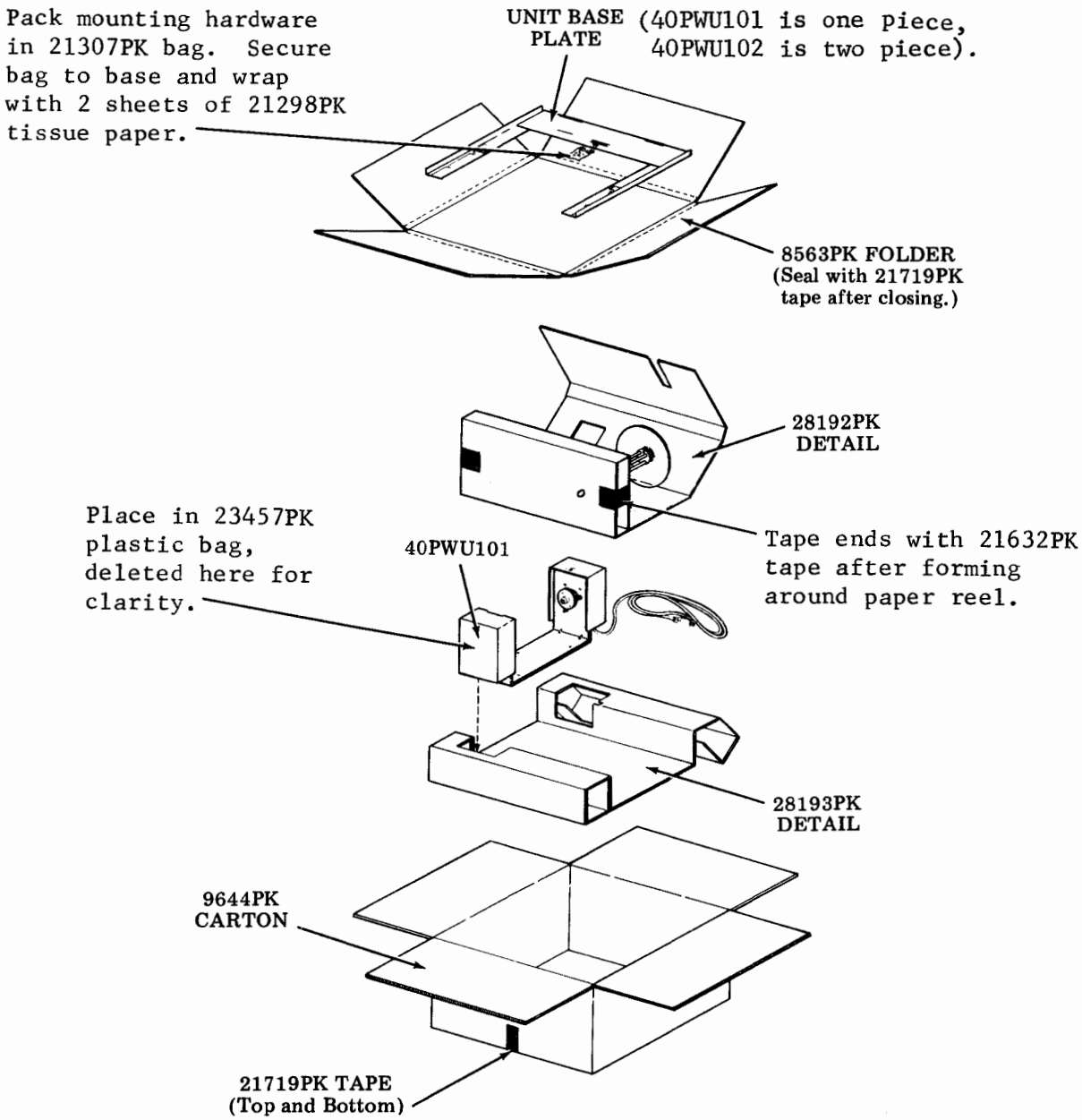

B. SHOP PROCEDURES (Cont)

5. MARKING AND PACKING (Cont)

40BSE101 Monitor Base

Qty		Materials Required	As Required
1	8956PK	Corrugated Carton	21719PK Tape
1	28206PK	Corrugated Detail	
1	23457PK	Plastic Bag	

Place unit in 23457PK plastic bag, deleted here for clarity.

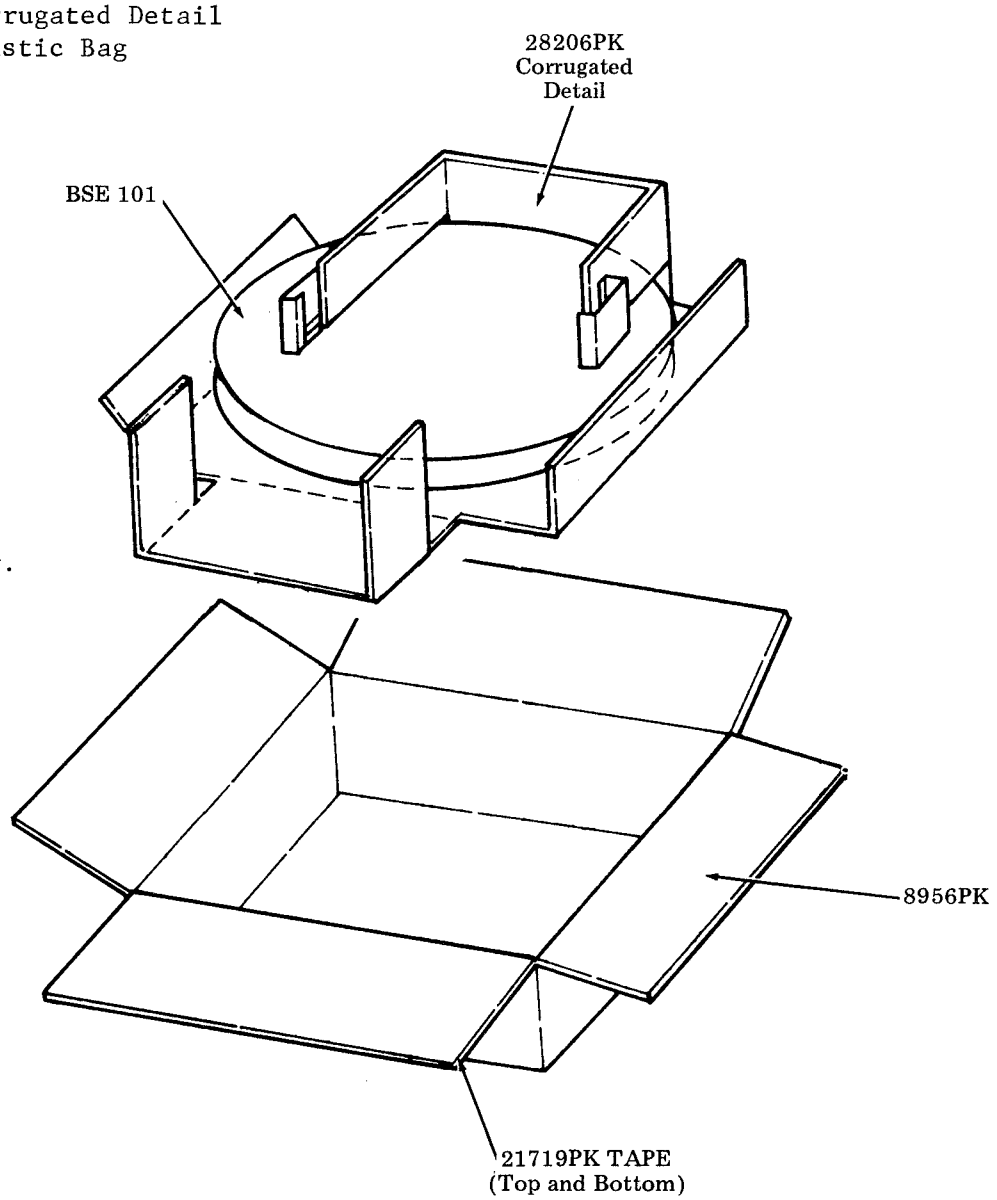

40BSE201 Opcon Base

Qty	Materials Required
1	9022PK Corrugated Carton
1	28208PK Corrugated Detail
1	50136PK Twist Tie
1	23456PK Plastic Bag
As Required:	
	21719PK Paper Tape

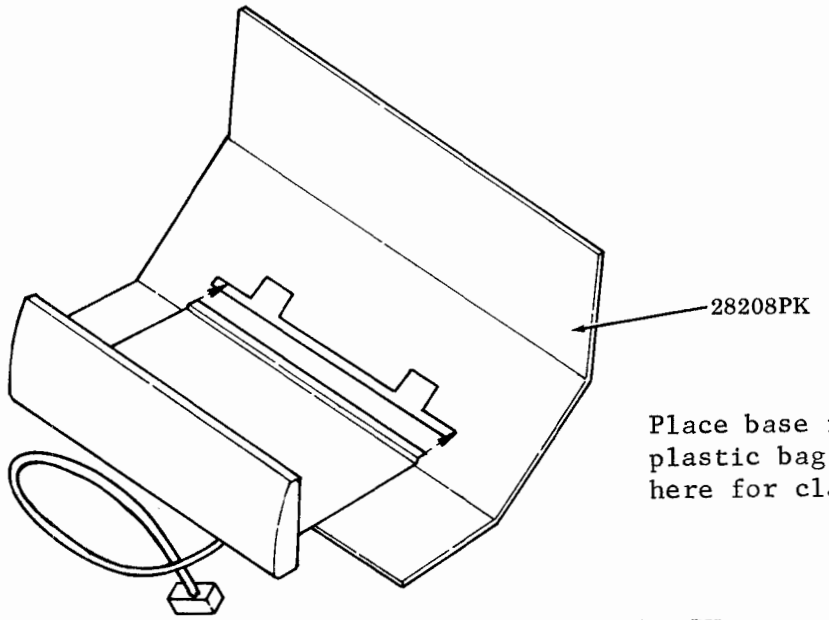

Place base in 23456PK plastic bag, deleted here for clarity.

Coil cable and retain in coiled position with a 50136PK twist tie.

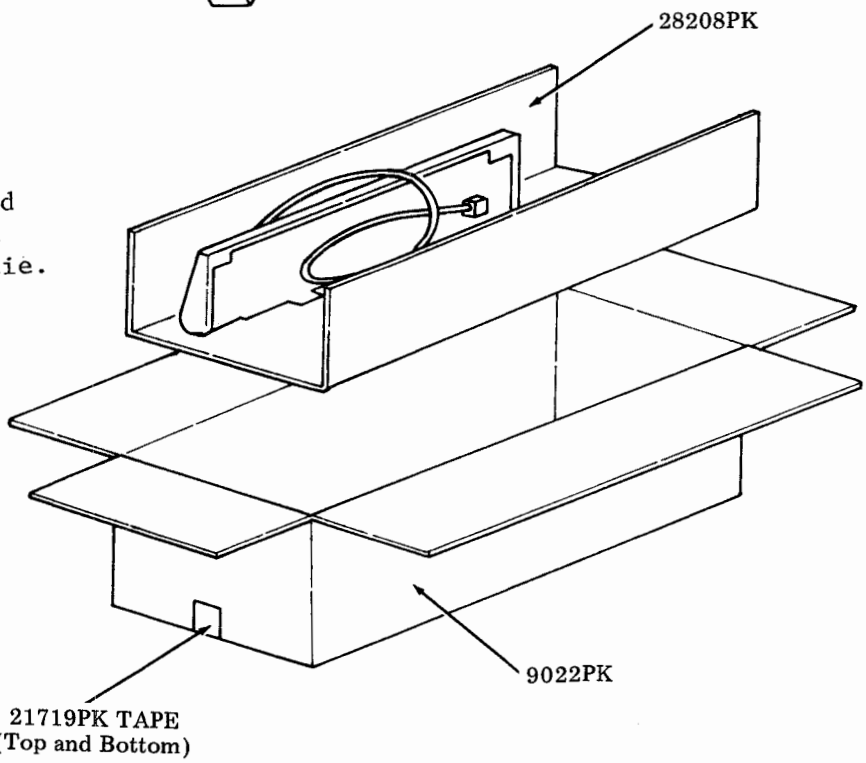

B. SHOP PROCEDURES (Cont)

5. MARKING AND PACKING (Cont)

40BSE202 Opcon Base

Qty	Materials Required	
1	9255PK	Corrugated Carton
1	28329PK	Corrugated Detail
	21632PK	Tape (as required)
	21719PK	Paper Tape (as required)
	21298PK	Tissue (as required)

Nest cable in 21298PK tissue -- Fill all void space with tissue.

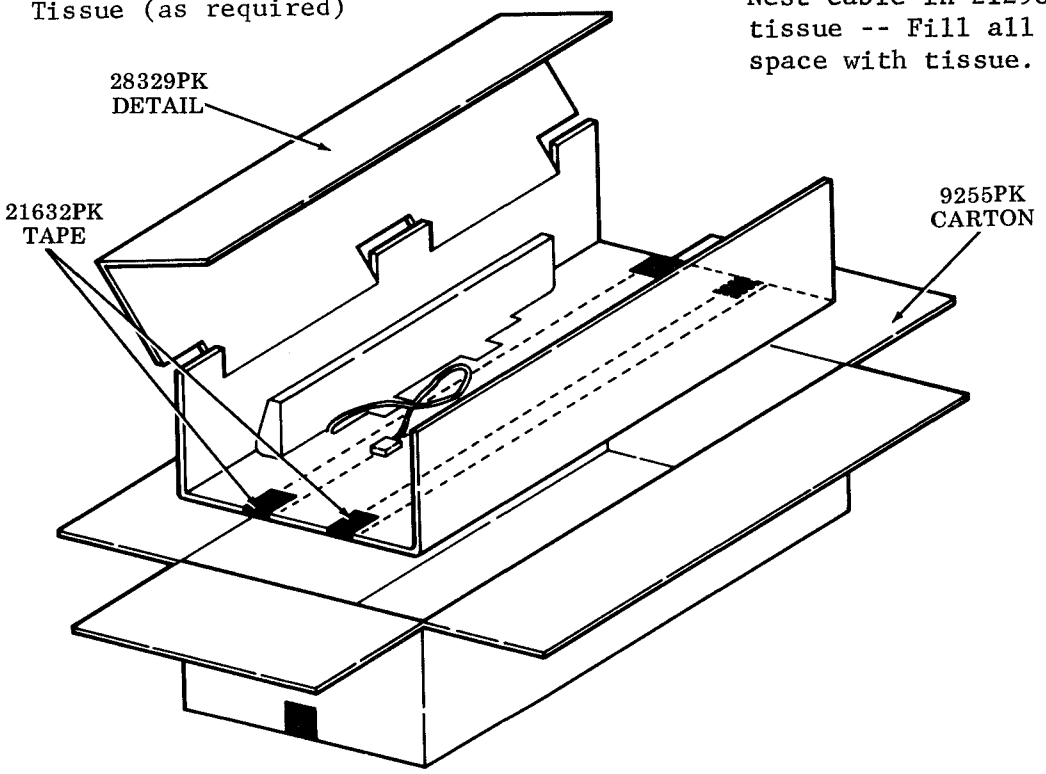

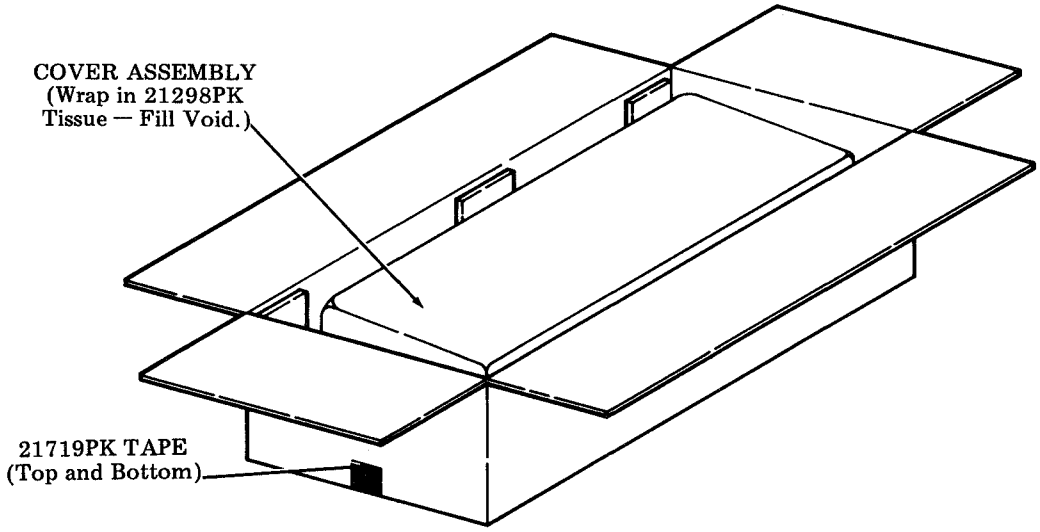

401200 Copyholder

Materials Required

Qty		
1	8814PK	Corrugated Carton
	21298PK	Tissue Paper (as required)
	21719PK	Tape (as required)

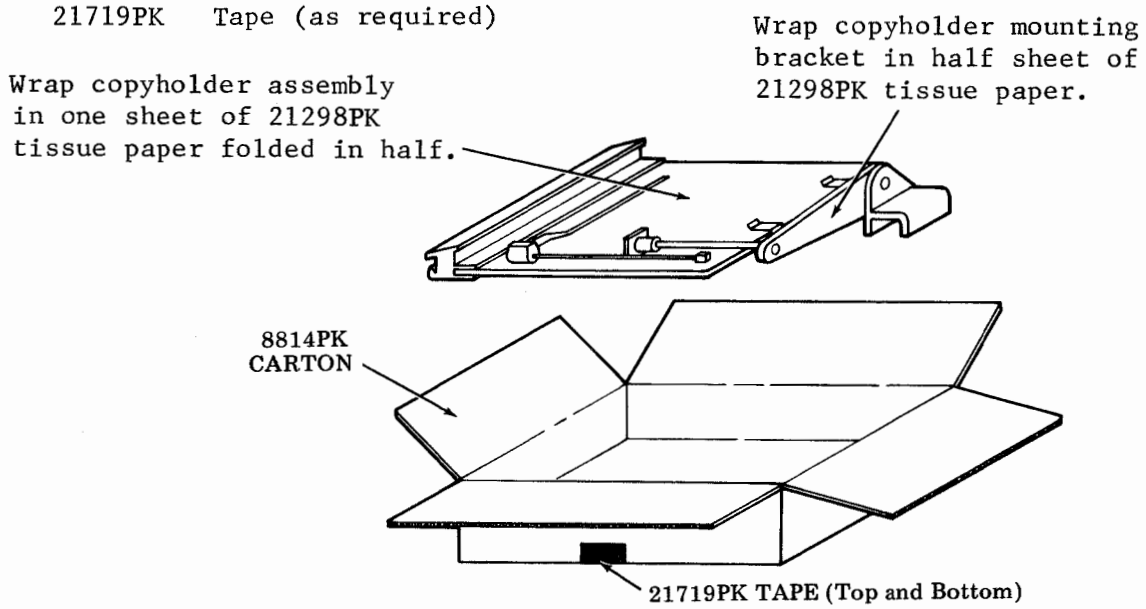

C. TESTING

1. GENERAL

Testing of Model 40 cabinets and pedestals consists primarily of making certain voltage and continuity checks, using a volt-ohm-milliammeter (VOM) switched to appropriate range. Whenever a check fails, refer to schematic diagrams in D. TROUBLESHOOTING for point-to-point wiring information.

2. VOLTAGE AND CONTINUITY CHECKS

All Cabinets, Paper Winders and Facilities

Check continuity between power cord plug grounding pin and cabinet or chassis ground connection. The resistance reading should be essentially zero ohms with VOM on R X 1 range.

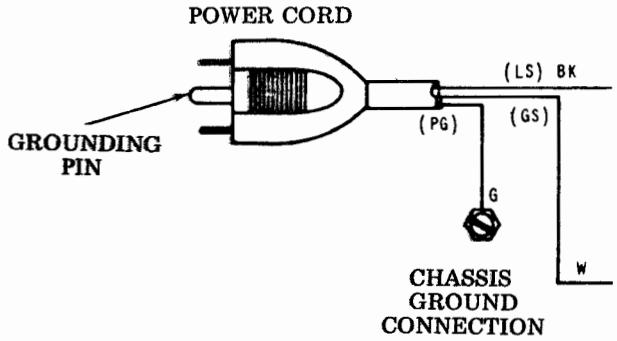

C. TESTING (Cont)

2. VOLTAGE AND CONTINUITY CHECKS (Cont)

Cabinets -- Friction Feed Printer

The Interlock switch has a three position activator. Check for continuity at interlock connector terminals 1 and 2 when activator is lifted to position 1 and held down (audible click) in position 3. No continuity shall be observed in position 2.

Check for continuity of the SSI cable at connector (terminals 1 to 2 and 3 to 6) at rear of printer cabinet.

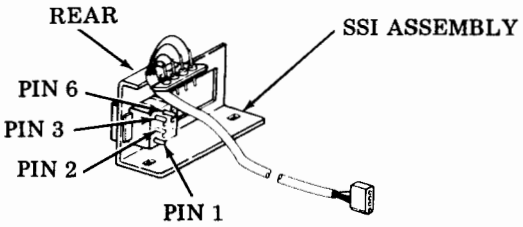

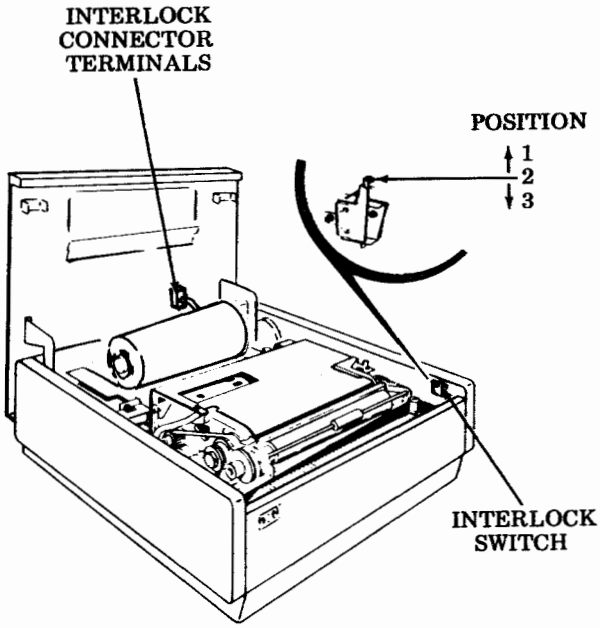

Cabinets -- Tractor Feed Printer

Check for continuity of SSI cable connector (terminals 1 to 2 and 3 to 6) at rear of printer cabinet.

Check for continuity of paper advance switch at connector terminals 3 to 4 when switch is depressed.

Check for continuity of form advance switch at connector terminals 3 to 4 and 3 to 5 when switch is depressed.

Check for continuity of lamp in paper switch at connector terminals 1 to 2.

The Interlock switch has a three position activator. Check for continuity at connector terminals 6 to 7 and 3 to 5 when activator is lifted to position 1 and held down (audible click) in position 3. No continuity shall be observed in position 2.

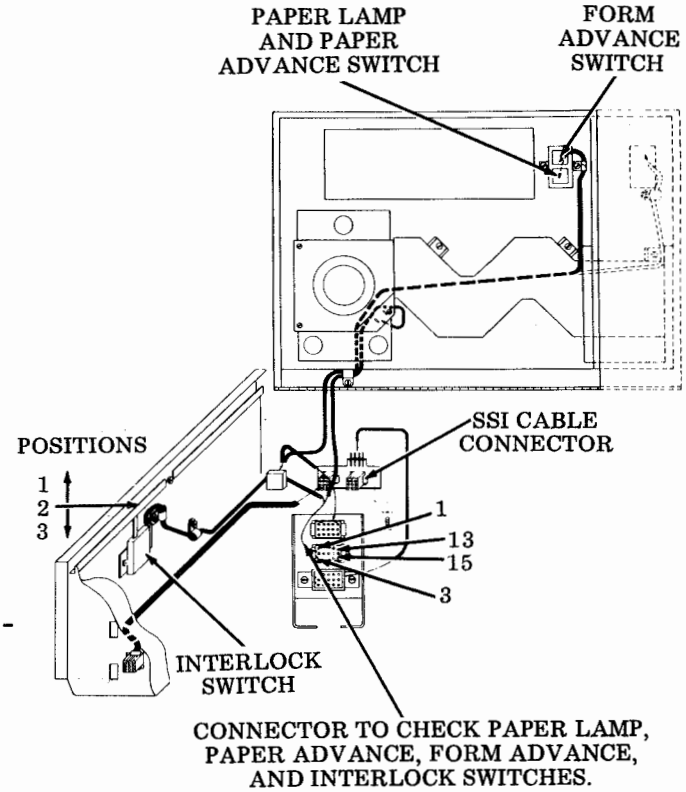

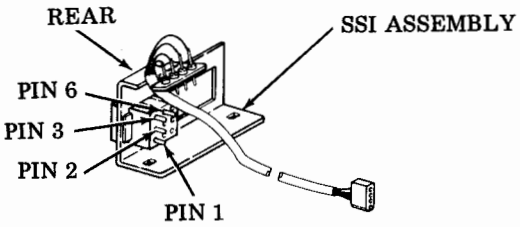

Cabinets -- Forms Access Printer

There are three Interlock switches on this cabinet. Each switch has a three-position activator. Check for continuity at connector terminals 6 to 7 and 3 to 5 when the activators are lifted to their 1 position (maintenance) and held down (audible click) in their 3 position. No continuity shall be observed in their 2 position. If cable continuity fails, check individual interlocks.

Check for continuity of the SSI cable connector terminals 1 to 2 and 3 to 6 at the rear of the printer cabinet.

Check for continuity of the paper advance switch at connector terminals 3 to 4 when switch is depressed.

Check for continuity of the form advance switch at connector terminals 3 to 4 and 3 to 5 when switch is depressed.

Check for continuity of lamp in paper switch at connector terminals 1 to 2.

Check for continuity of Power On switch and lamp at connector terminals 4 and 6 when switch is depressed.

Check for 115 V ac ± 10 percent at three connectors of the ac distribution box.

Pedestal

Check for 115 V ac ± 10 percent at all receptacles of the ac distribution panel in the pedestal.

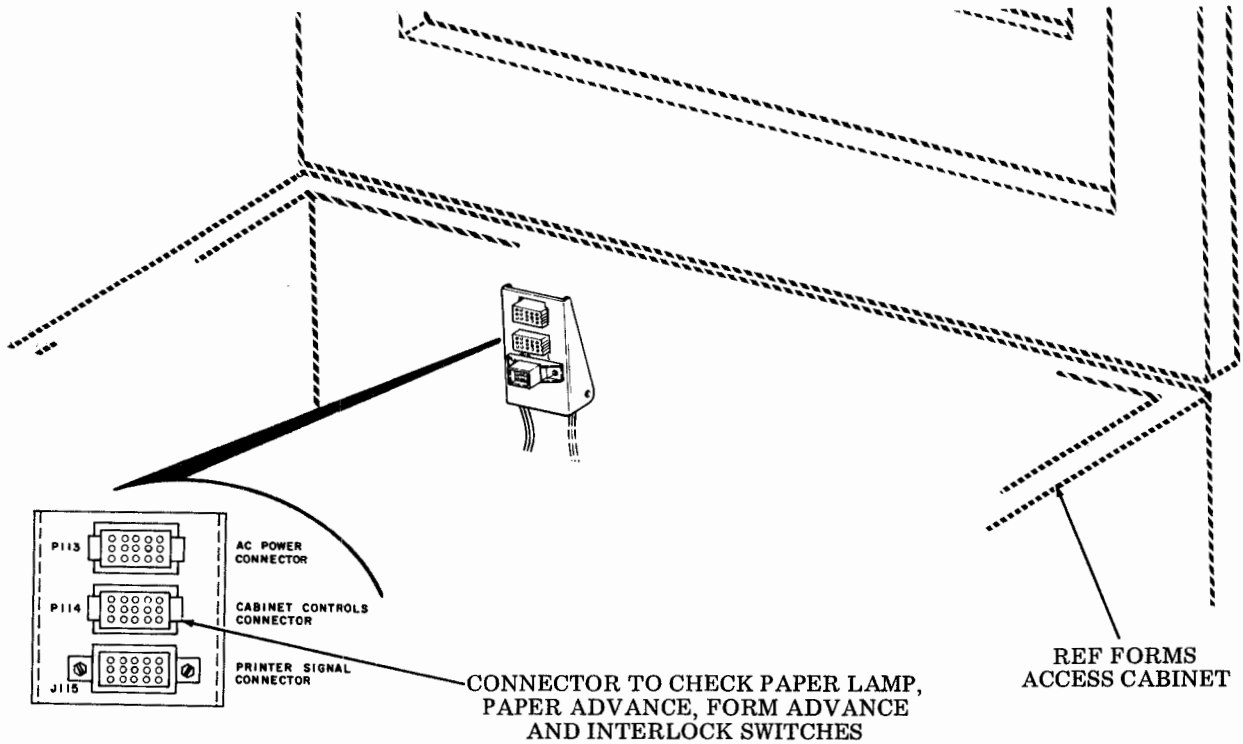

D. TROUBLESHOOTING

1. GENERAL

This section provides information for locating troubles encountered in testing Model 40 Cabinets, Paper Winders, and Facilities. Troubleshooting will normally consist of locating wiring and/or cabling problems found while testing in accordance with C. TESTING or when testing other Model 40 components after assembly into their cabinets.

Refer to appropriate diagram in this section and use the VOM as a continuity checker (R X 1 range) to find wiring opens, crosses, or grounds. For locating intermittent troubles, manually moving the cabling or connectors involved may be helpful.

CAUTION: WHEN MAKING CONTINUITY CHECKS, MAKE SURE ALL 115 V AC POWER IS DISCONNECTED, PREFERABLY BY UNPLUGGING AC POWER PLUG.

2. DIAGRAMS (CABINETS)

Friction Feed Printers

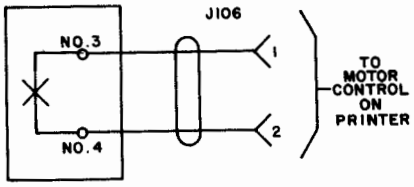

Interlock Cable Assembly

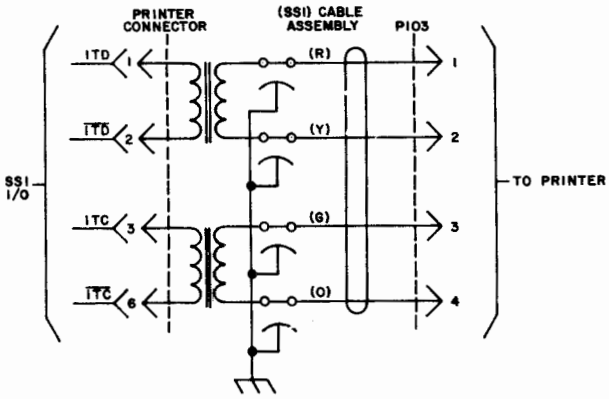

SSI Cable Assembly

Cabinets -- All Table Top Versions

NOTE: Early design ac distribution assem have two (2) 3 pin connector interim and late design have one (1) 6 pin connector.

Early Design	Interim Design	Late Design
400618 Assem	405050 Assem	407090 Assem
401629 Cable	401629 Cable	407093 Cable
405545 Cable	403892 Cable	403892 Cable

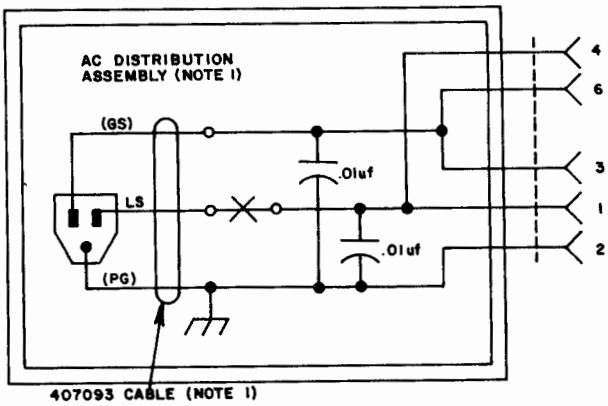

Cabinets -- Tractor Feed Printers

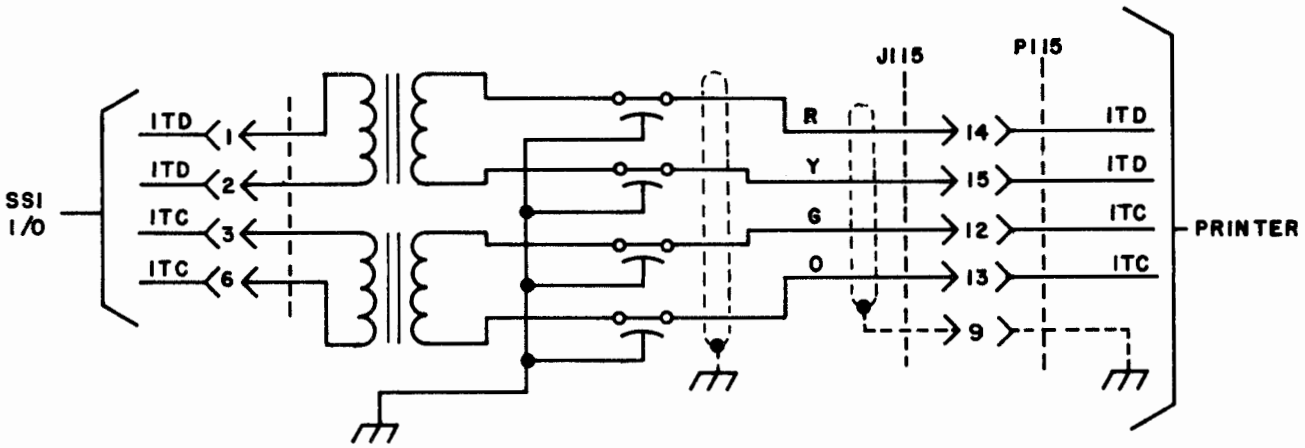

SSI Cable Assembly

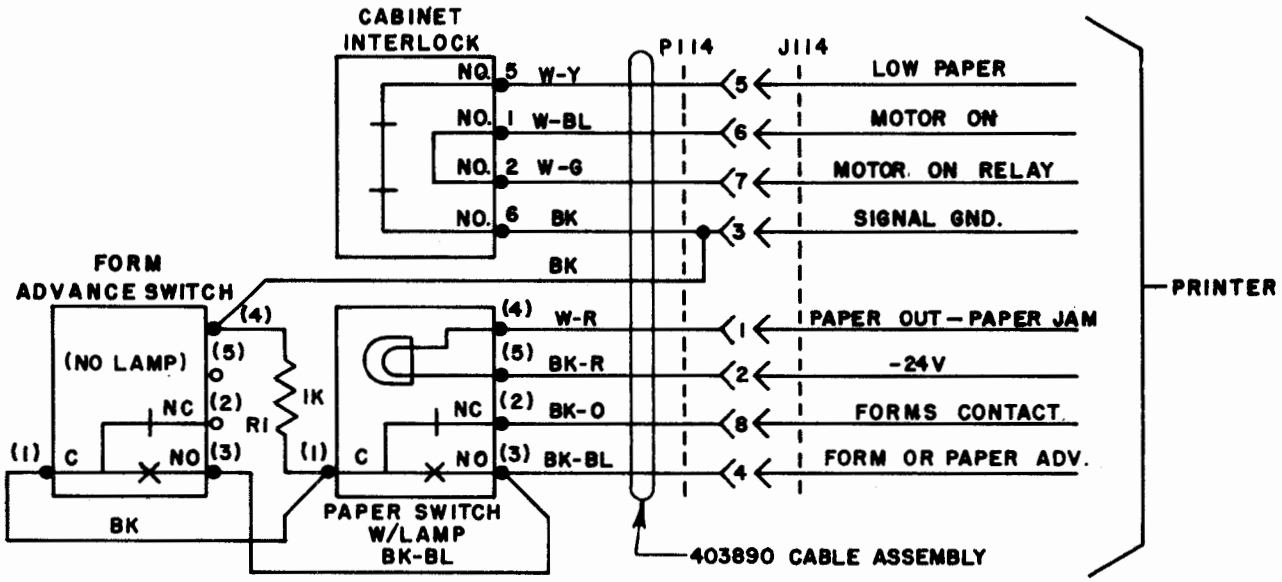

Tractor Feed Cabinet Interlock, Form Advance and Paper Switches

D. TROUBLESHOOTING (Cont)

2. DIAGRAMS (Cont)

Cabinets -- Forms Access Printer

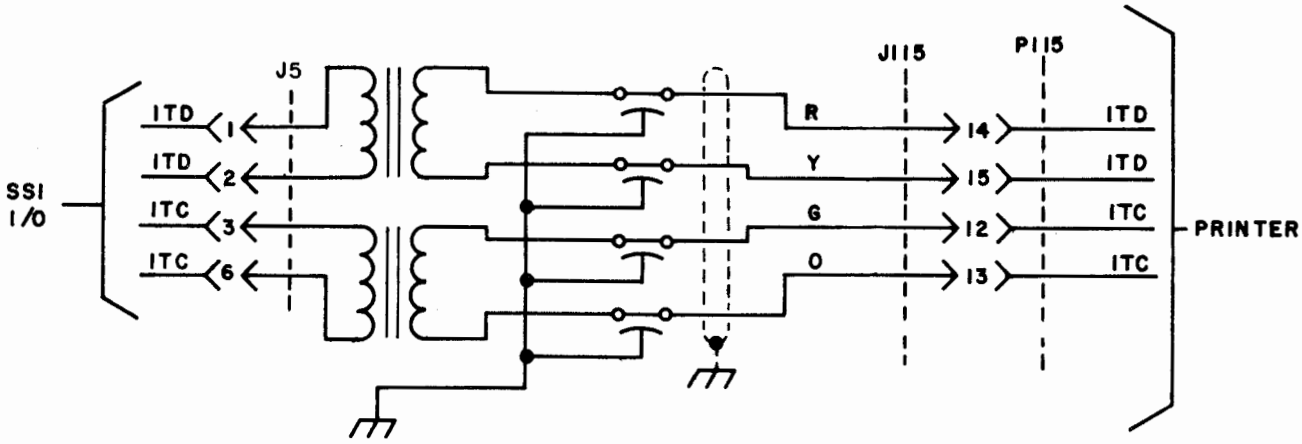

SSI Cable Assembly

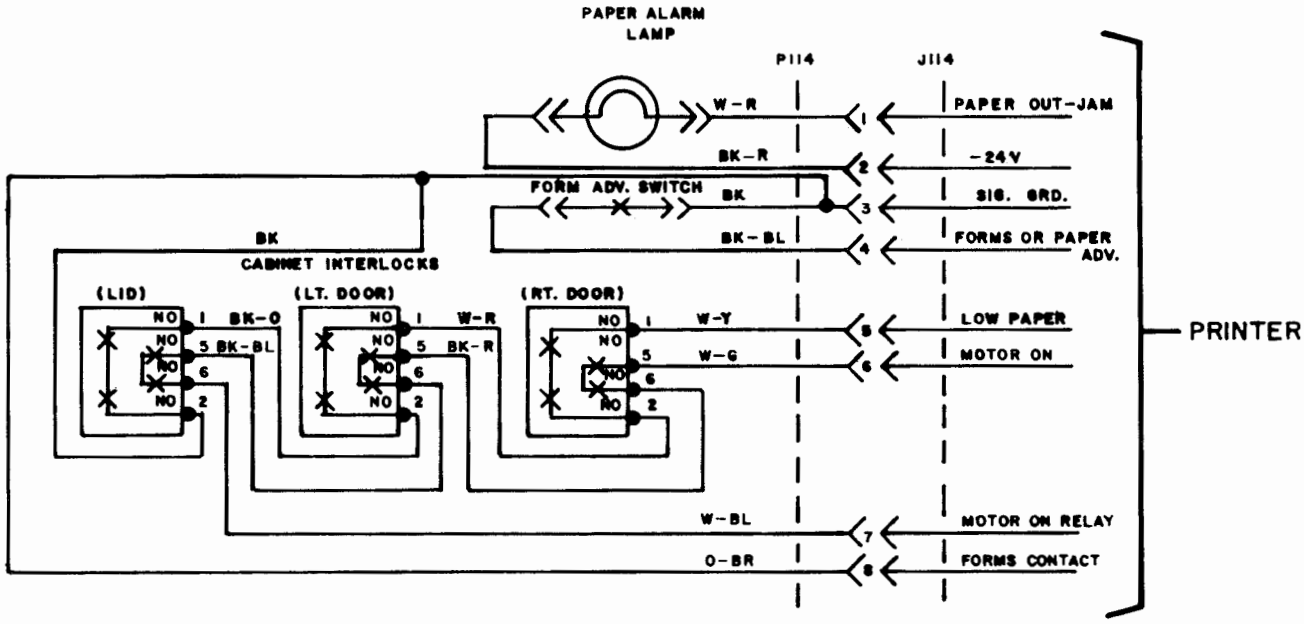

Forms Access Printer Cabinet, Interlock, Form Advance, and Paper Lamp

Cabinets -- Forms Access Printer

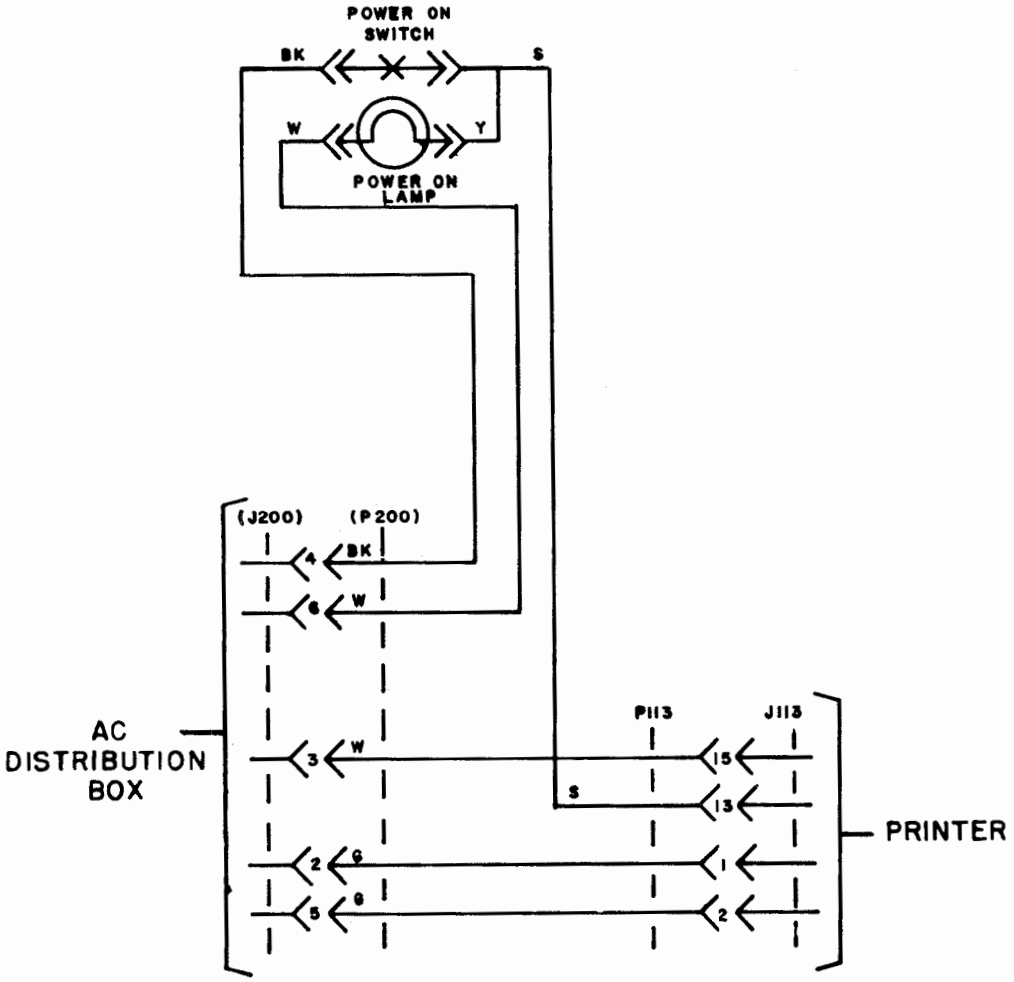

Forms Access Printer Cabinet Power Switch and Lamp

D. TROUBLESHOOTING (Cont)

2. DIAGRAMS (Cont)

Cabinet -- Forms Access Printer

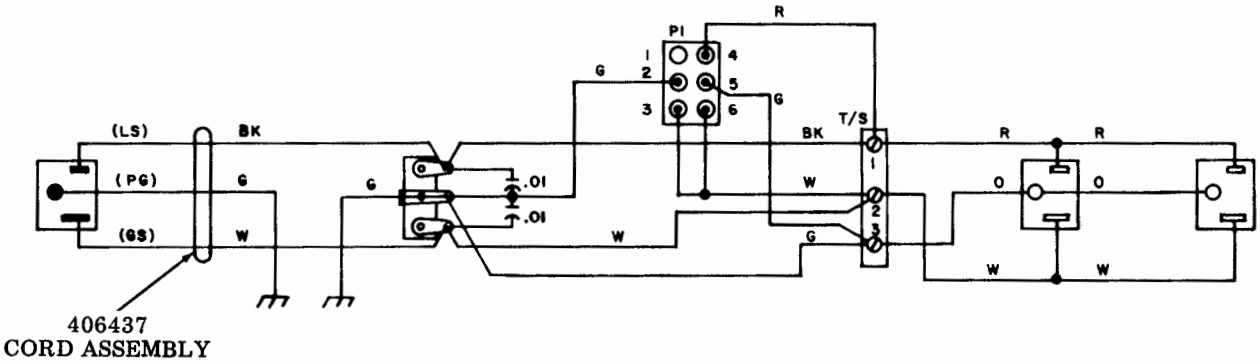

AC Distribution Box

Pedestal

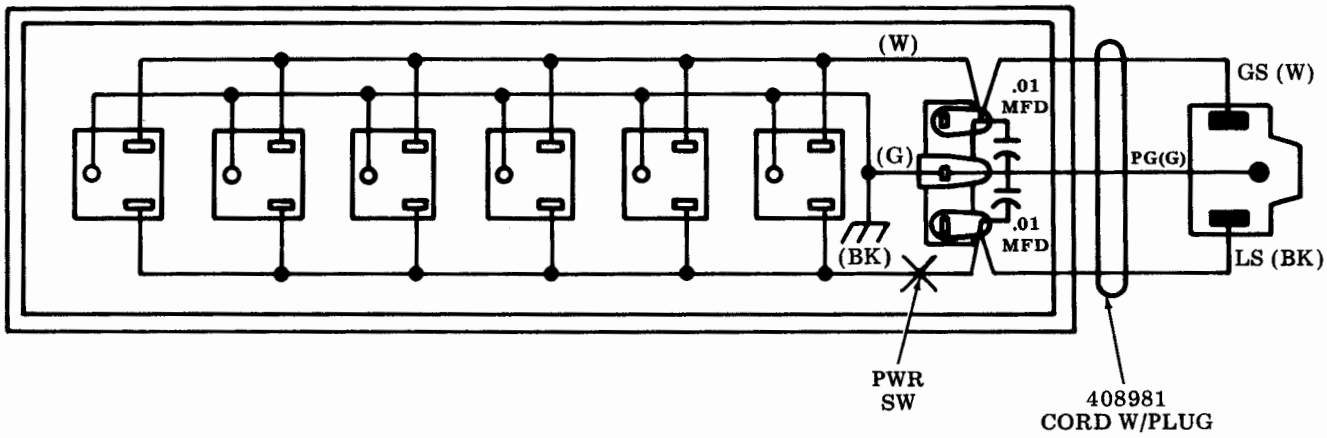

407285 AC Distribution Panel Assembly (Late Design)

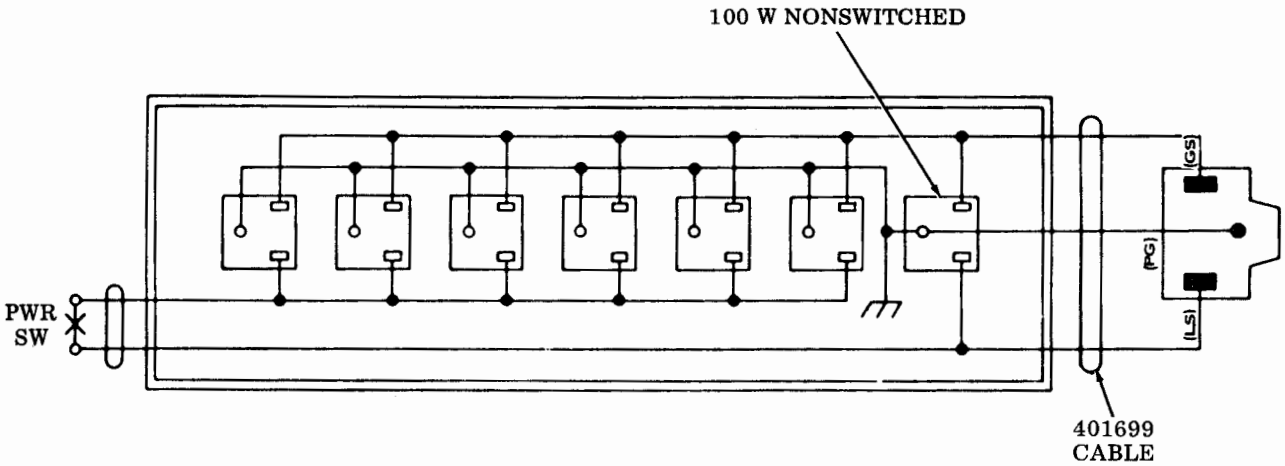

401665 AC Distribution Panel Assembly (Early Design)

3. CABLE ROUTING

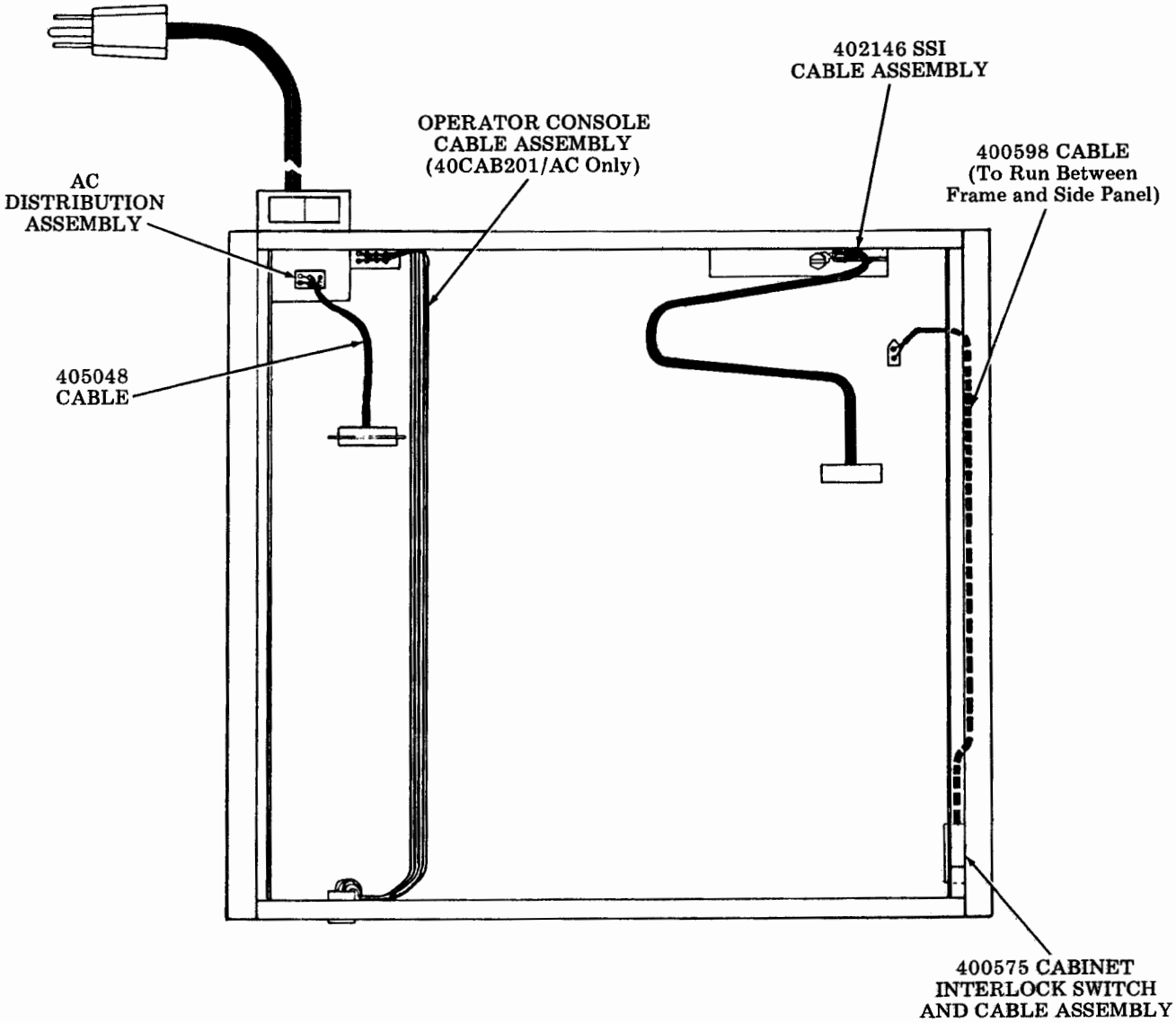

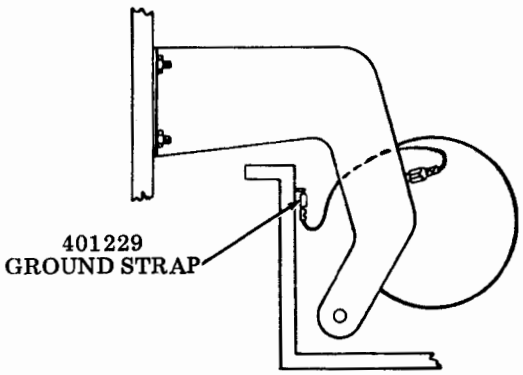

40CAB201/AA, AC Friction Feed Printer Cabinet

D. TROUBLESHOOTING (Cont)

3. CABLE ROUTING (Cont)

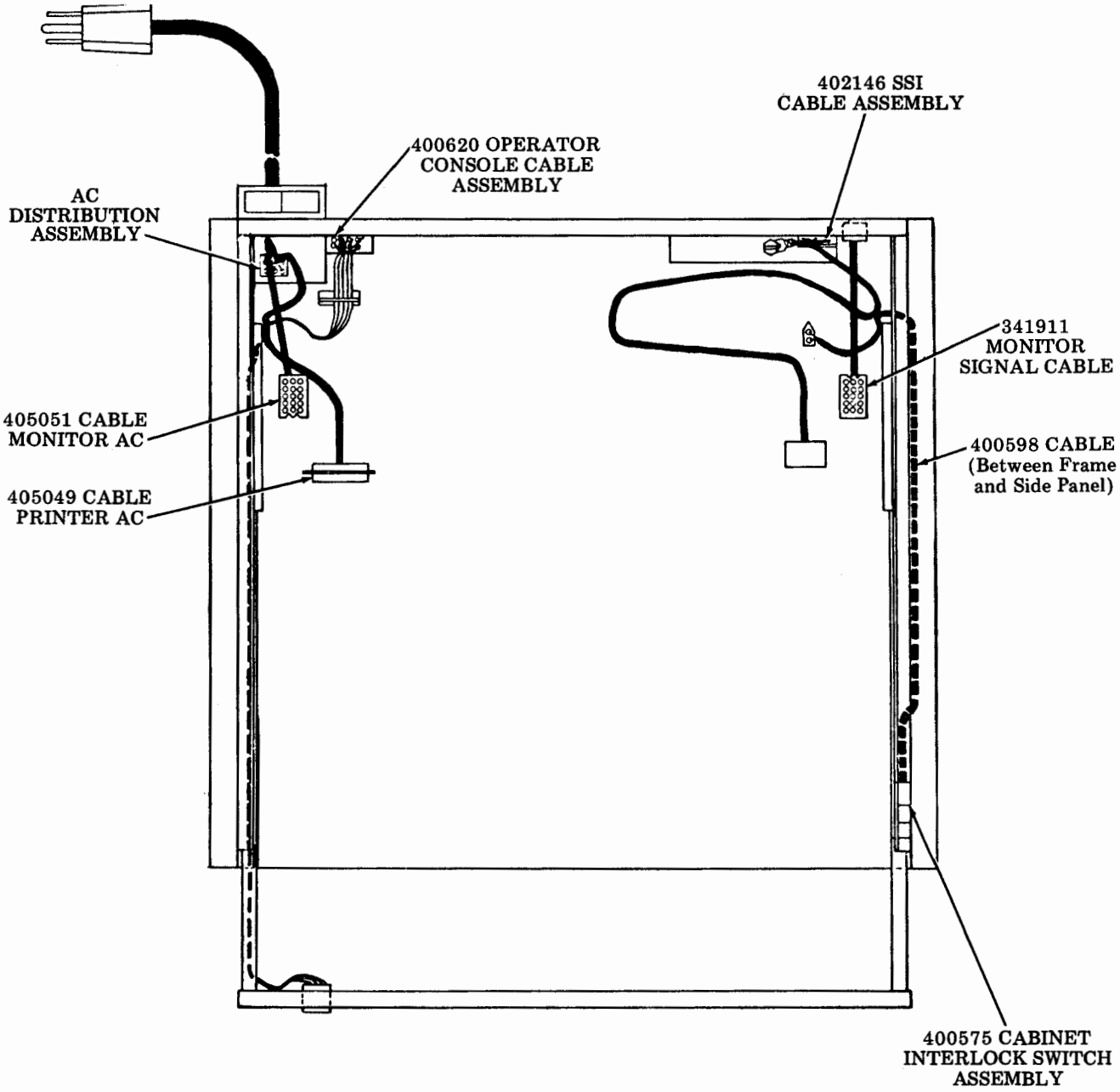

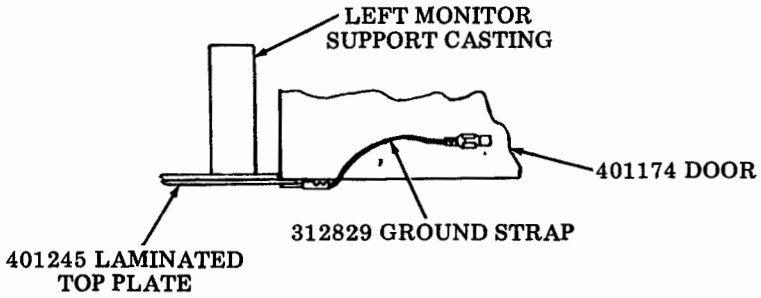

40CAB251/AA Friction Feed Printer Cabinet Under Monitor

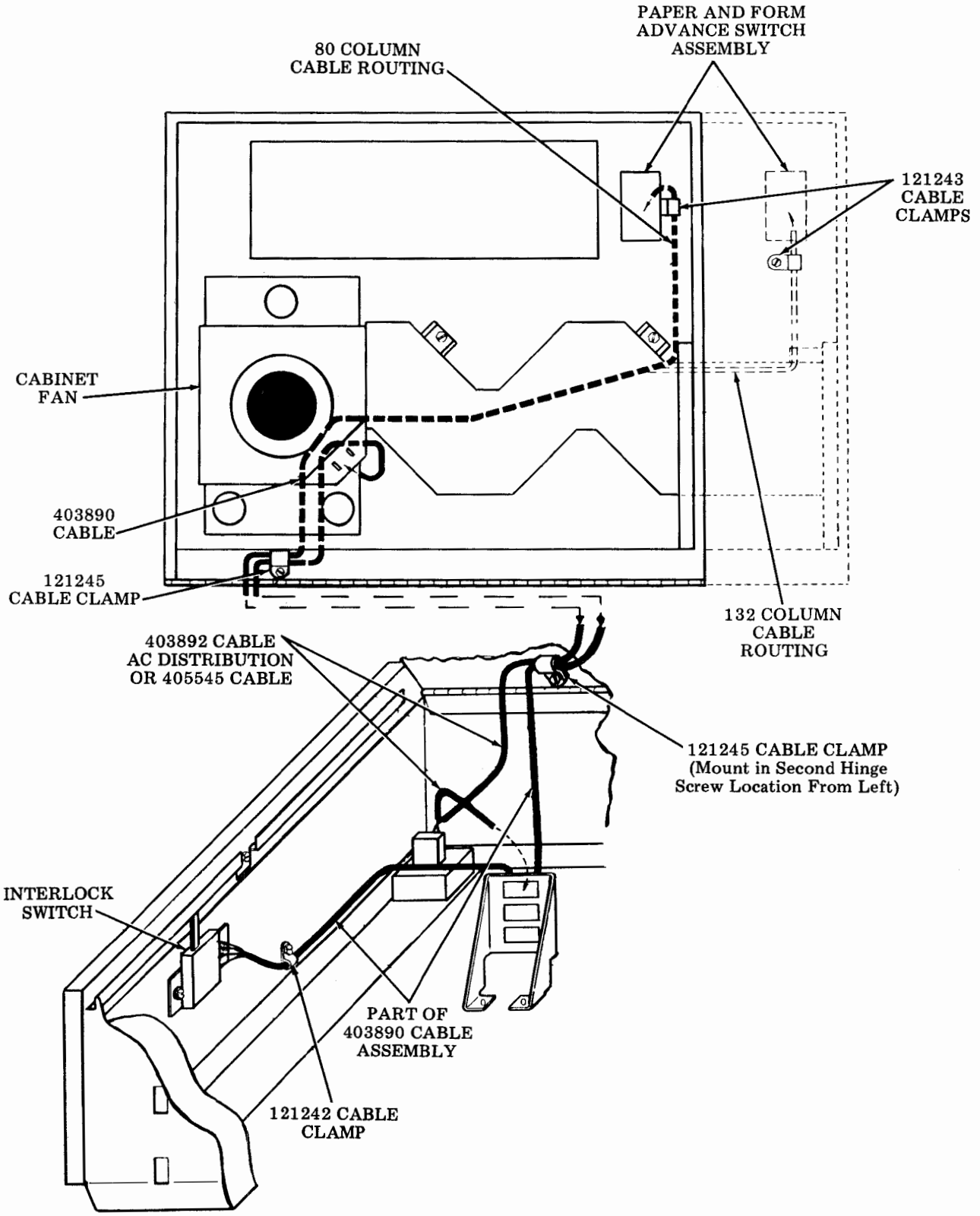

40CAB351 and 40CAB353 Tractor Feed Cabinet Basic Cabling

D. TROUBLESHOOTING (Cont)

3. CABLE ROUTING (Cont)

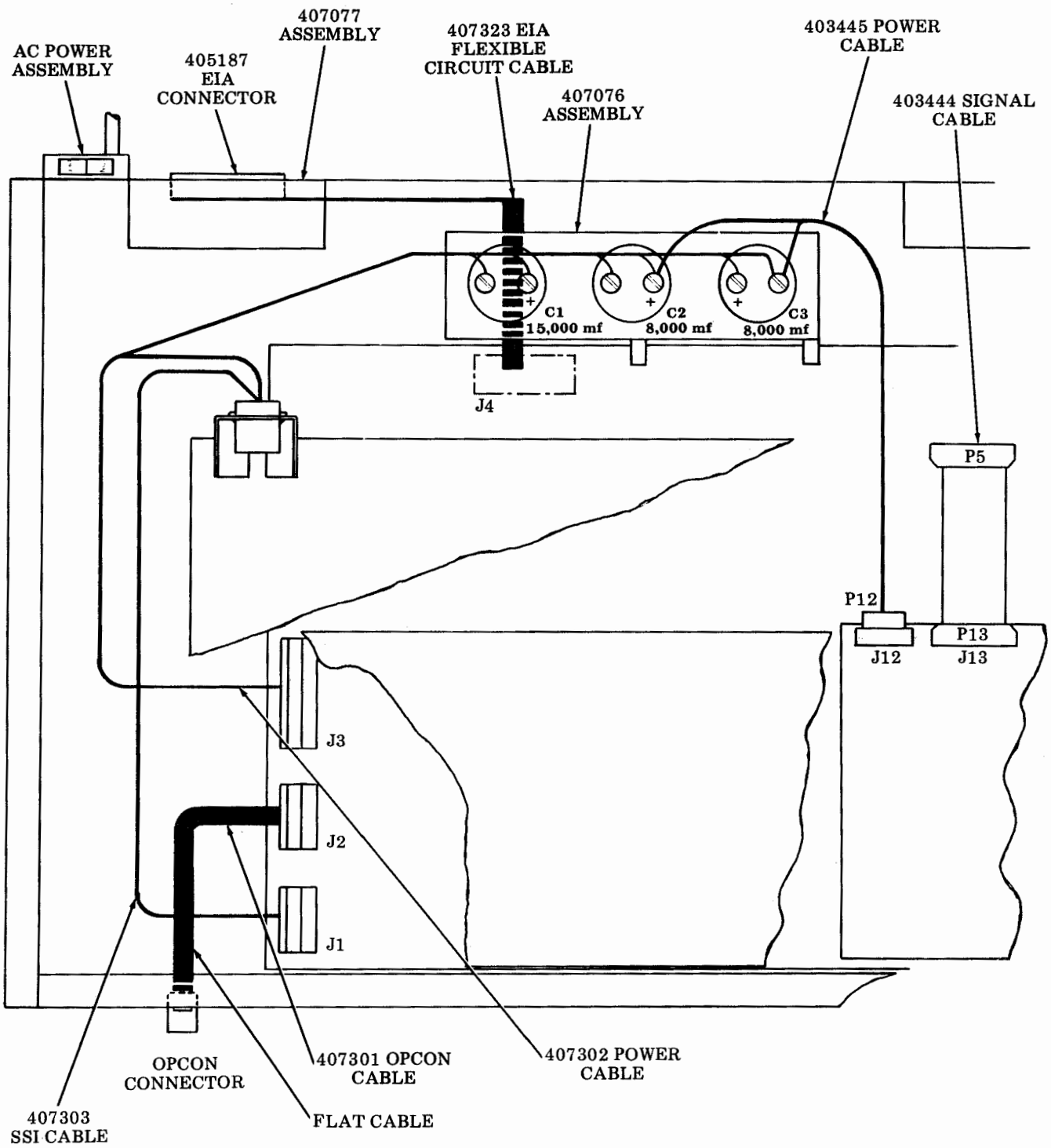

40CAB351 or 40CAB353 Tractor Feed Cabinet With Provision for Integrated Controller

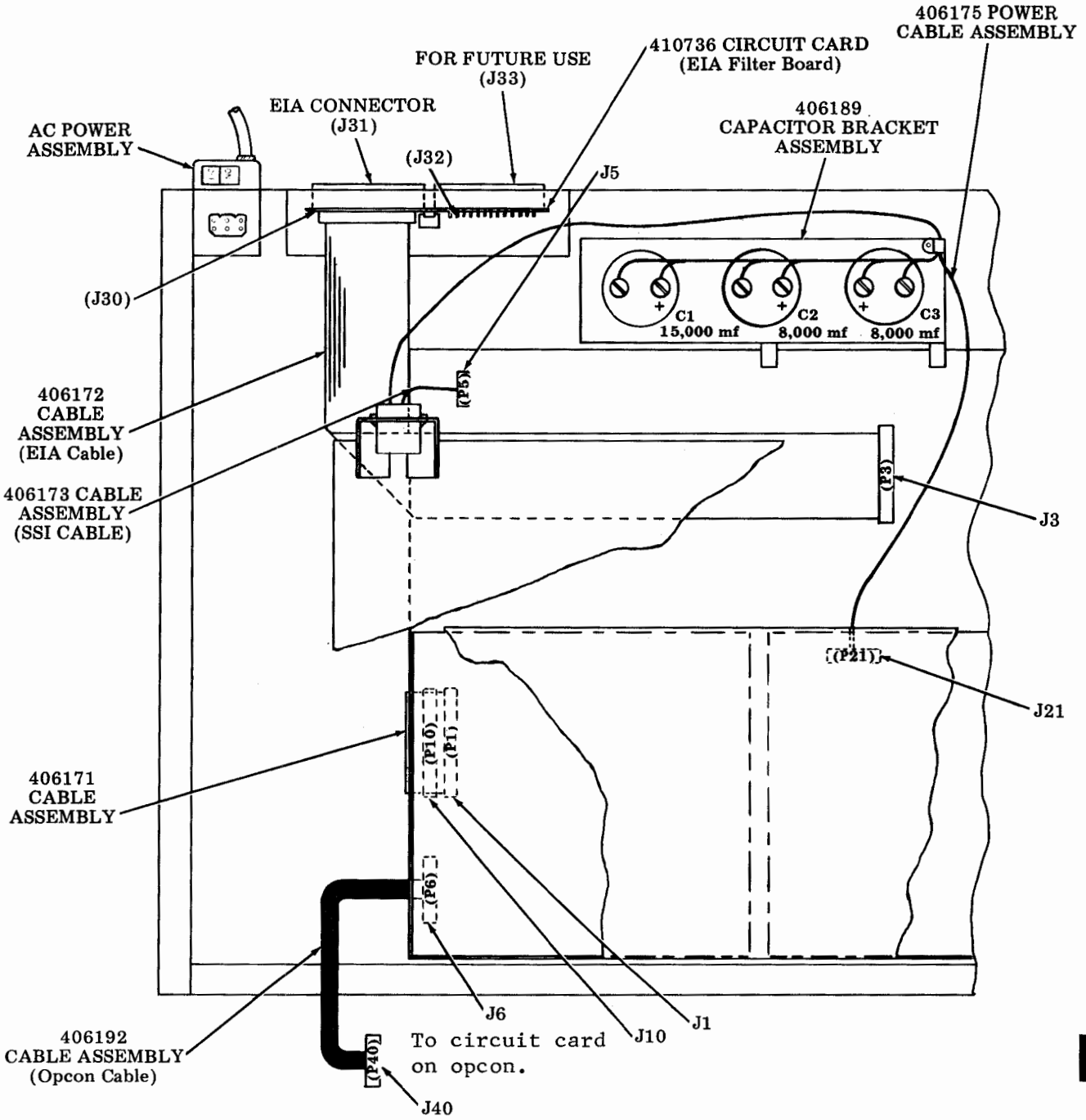

40CAB351 or 40CAB353 Tractor Feed Cabinet With Provision for Integrated Controller and Dual EIA Interface

D. TROUBLESHOOTING (Cont)

3. CABLE ROUTING (Cont)

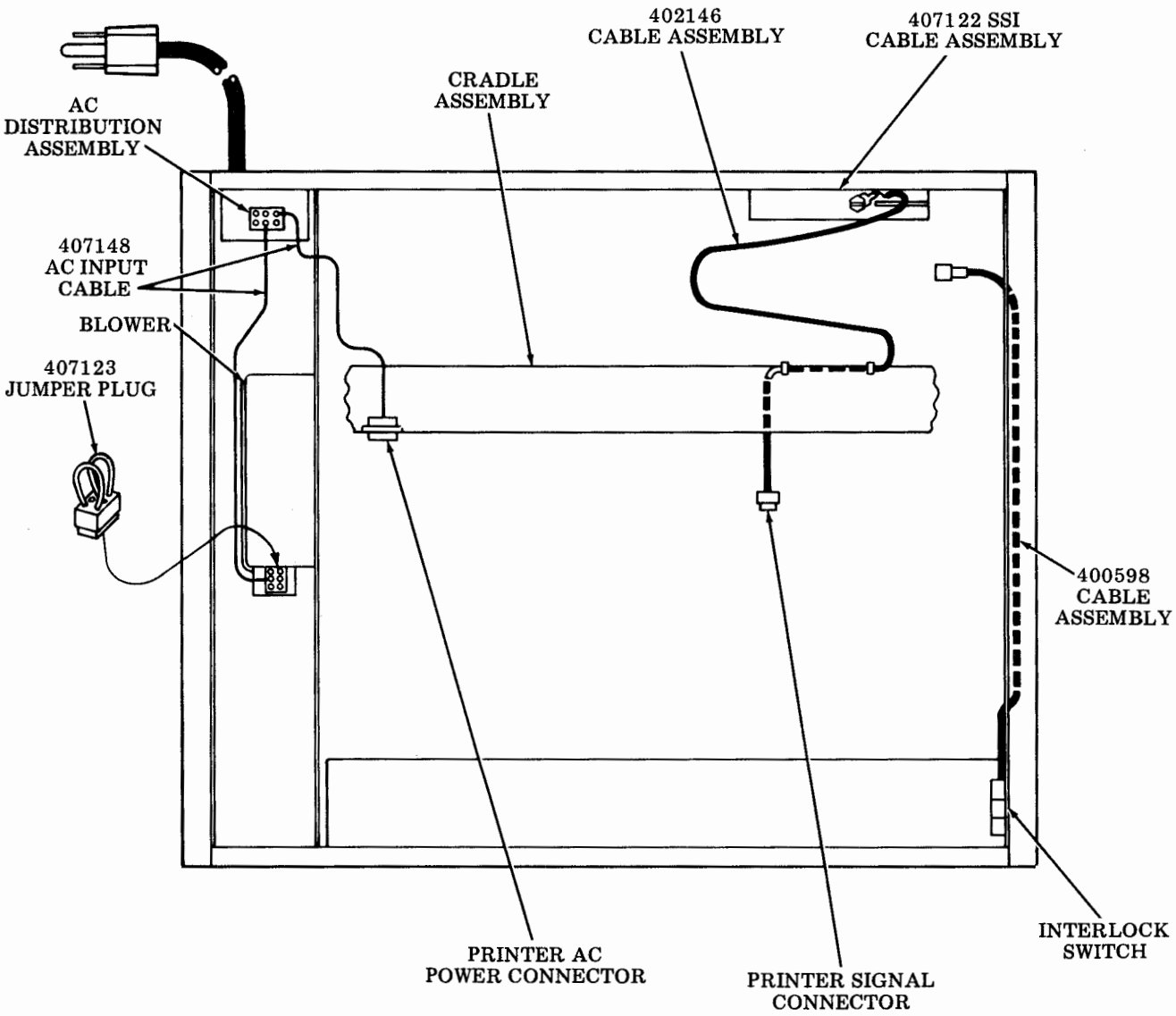

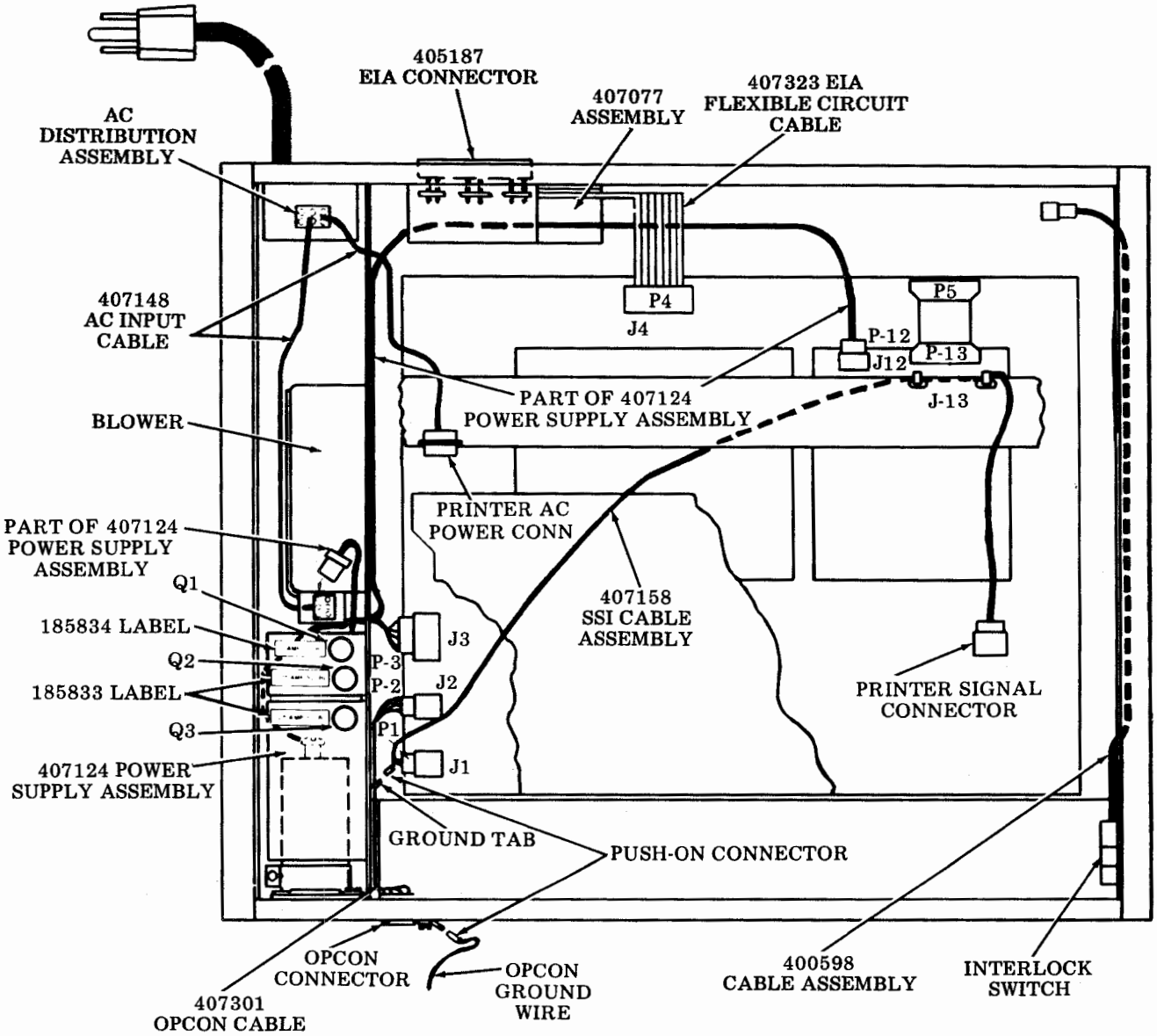

40CAB371/AB Friction Feed Printer Cabinet With Provision
For Integrated Controller

D. TROUBLESHOOTING (Cont)

3. CABLE ROUTING (Cont)

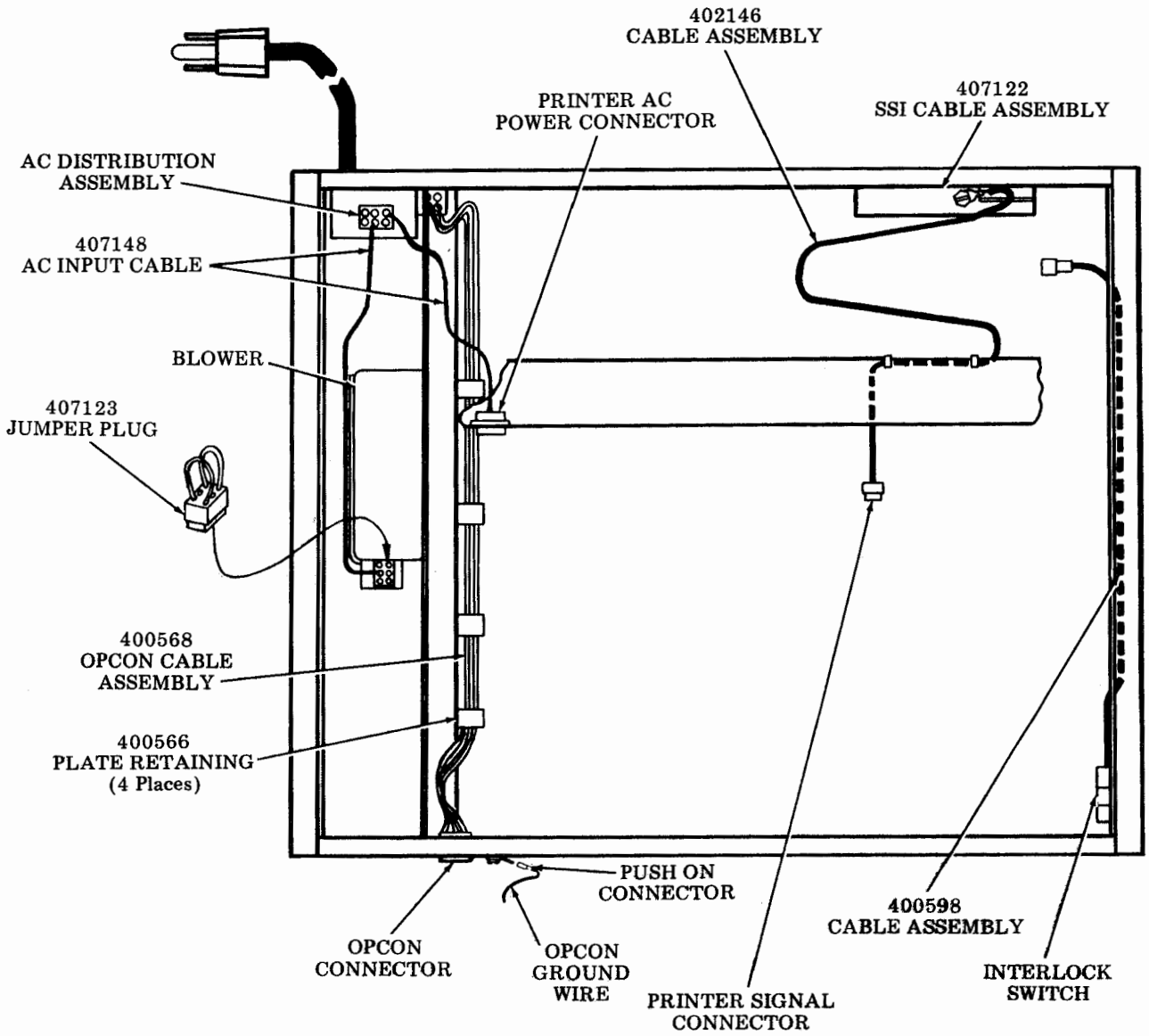

40CAB371/ZZ Friction Feed Printer Cabinet With 407102
Modification Kit

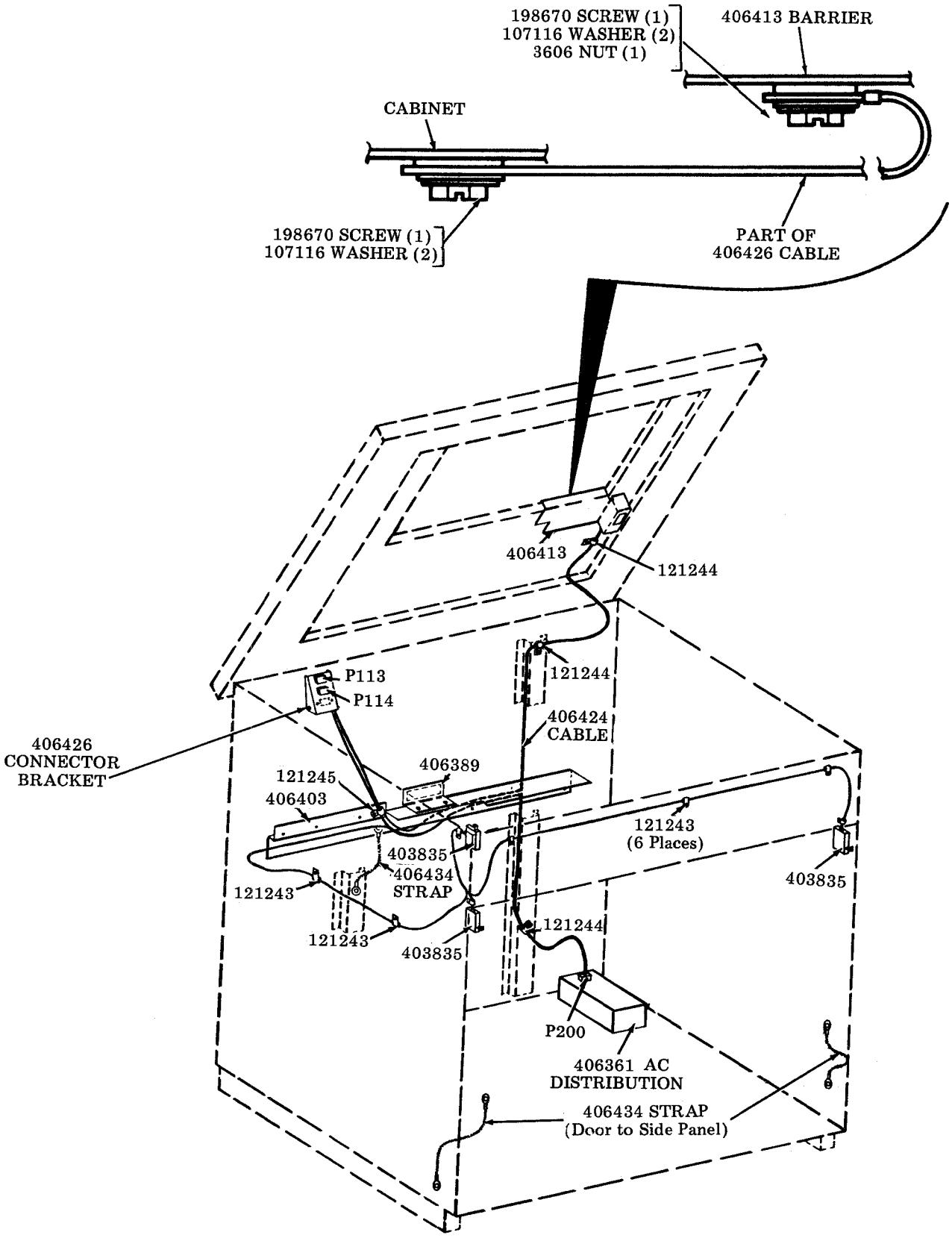

40CAB302 Forms Access Printer Cabinet Basic Wiring

D. TROUBLESHOOTING (Cont)

3. CABLE ROUTING (Cont)

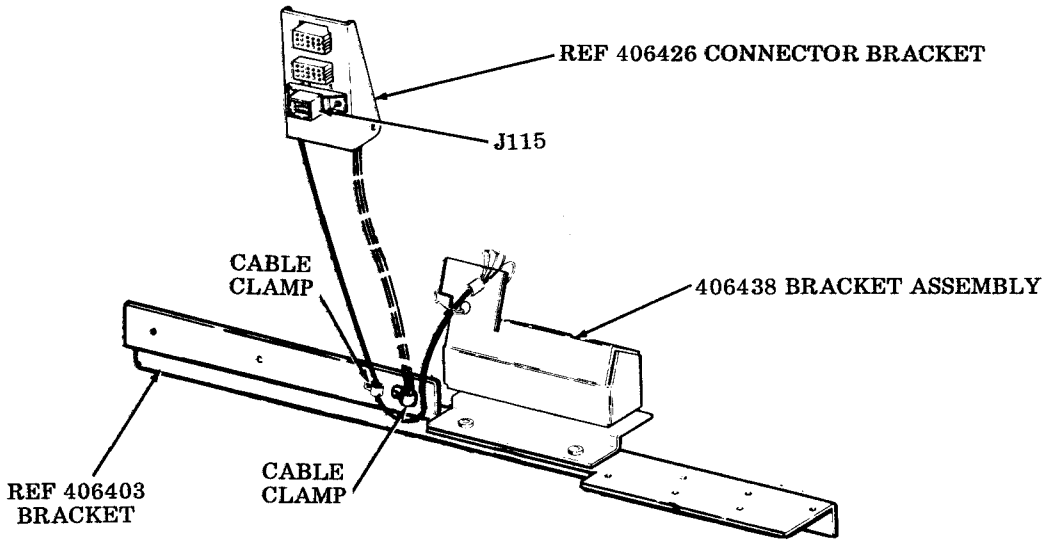

40CAB302 Forms Access Printer Cabinet with SSI Interface

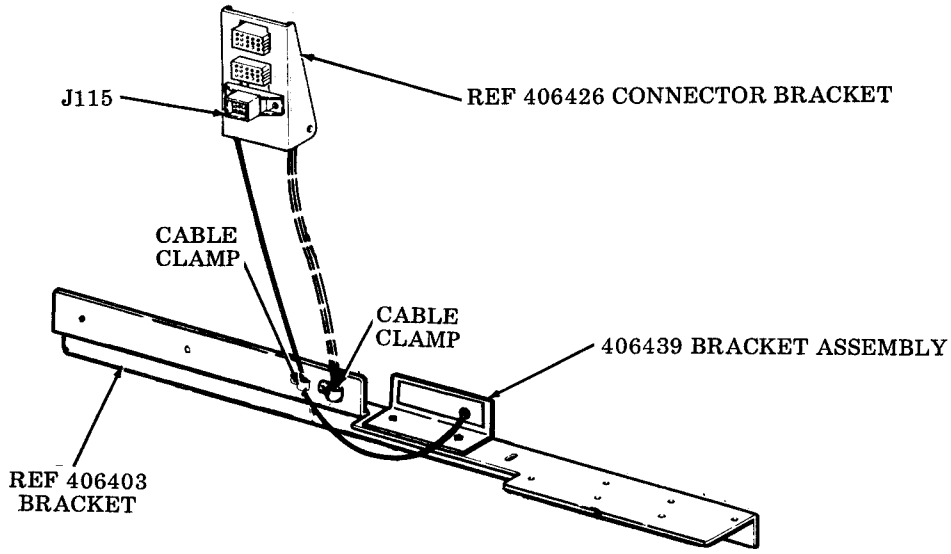

40CAB302 Forms Access Printer Cabinet With OEM* Interface

*Original Equipment Manufacturer

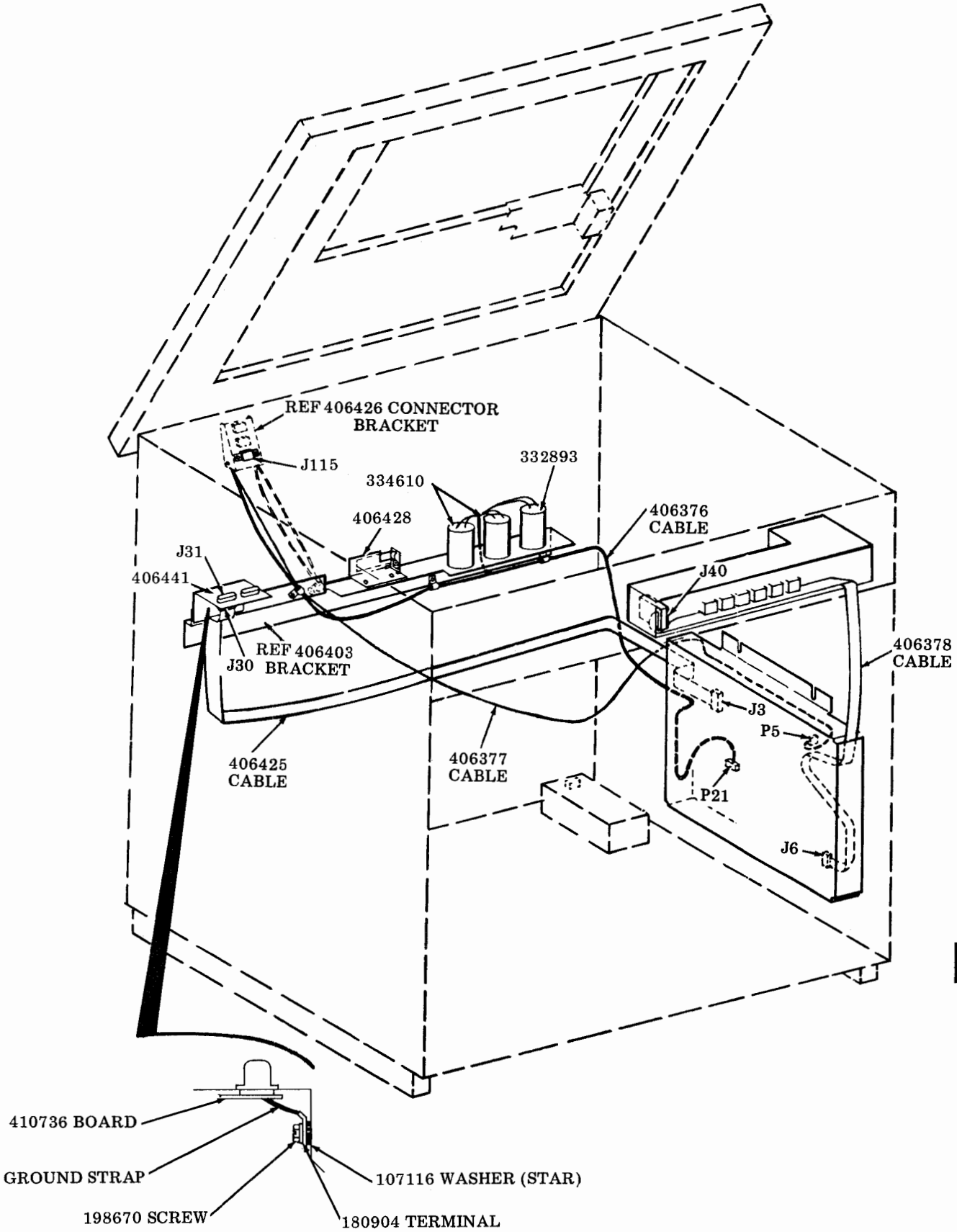

40CAB302 Forms Access Printer Cabinet With Provisions For Integrated Controller

D. TROUBLESHOOTING (Cont)

3. CABLE ROUTING (Cont)

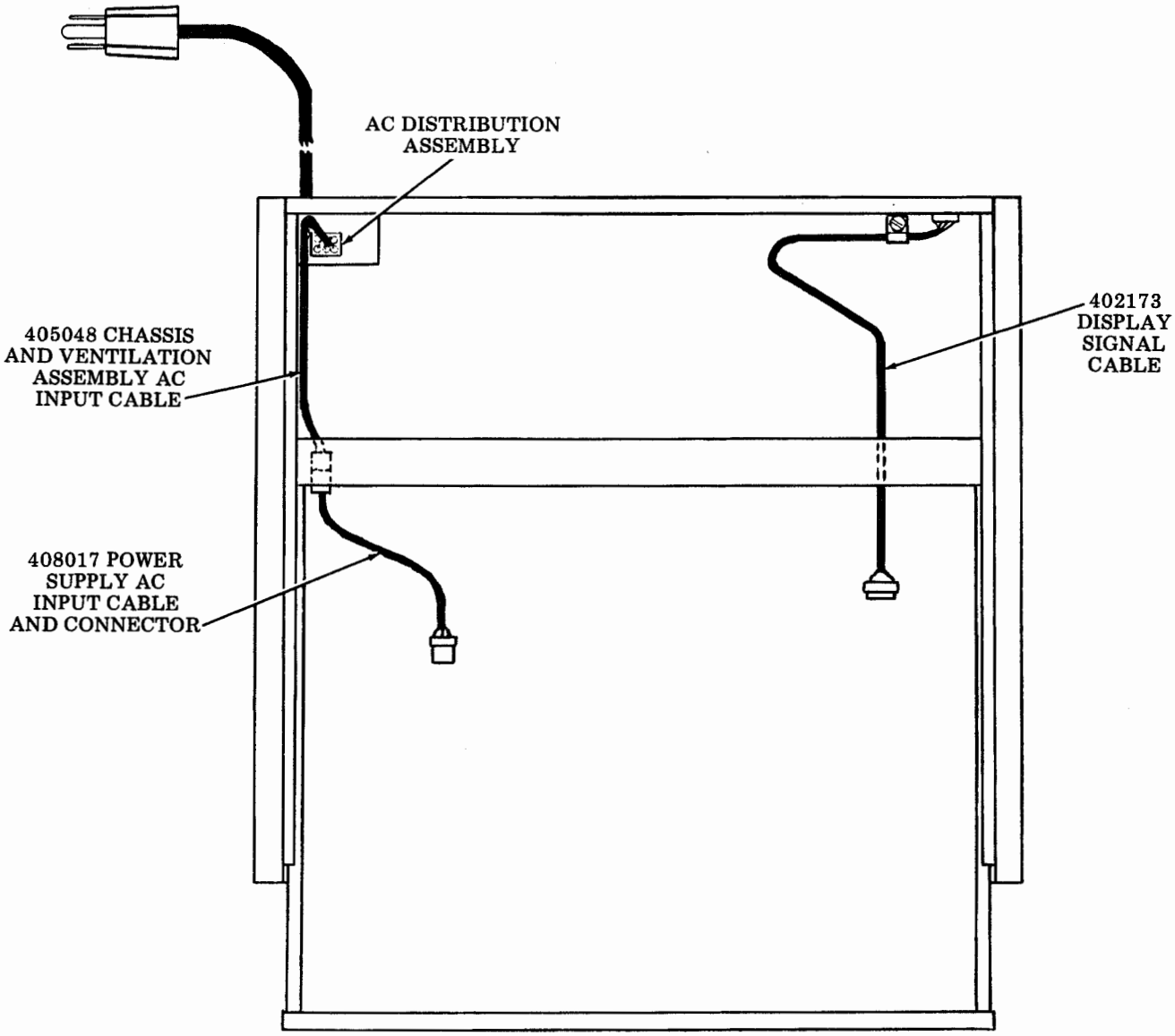

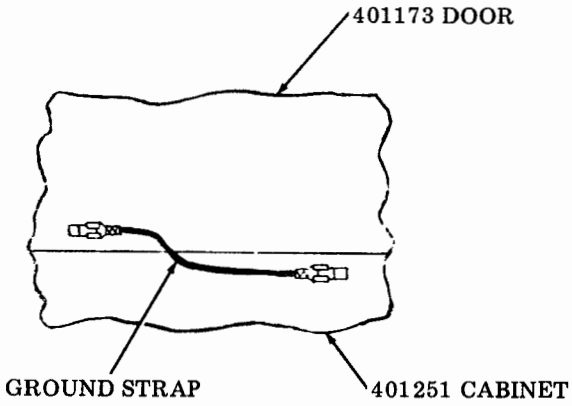

40CAB201/AB Logic Cabinet

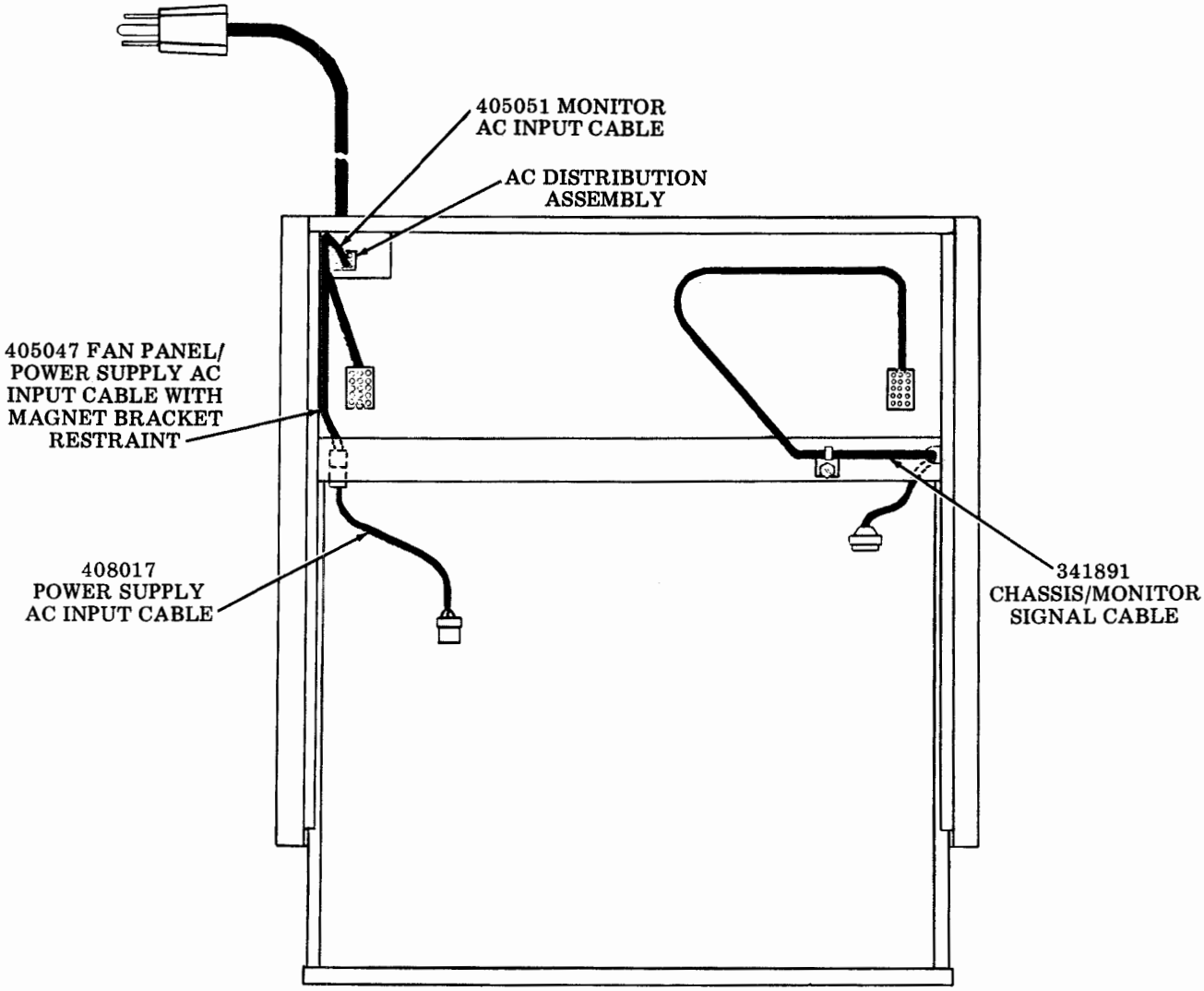

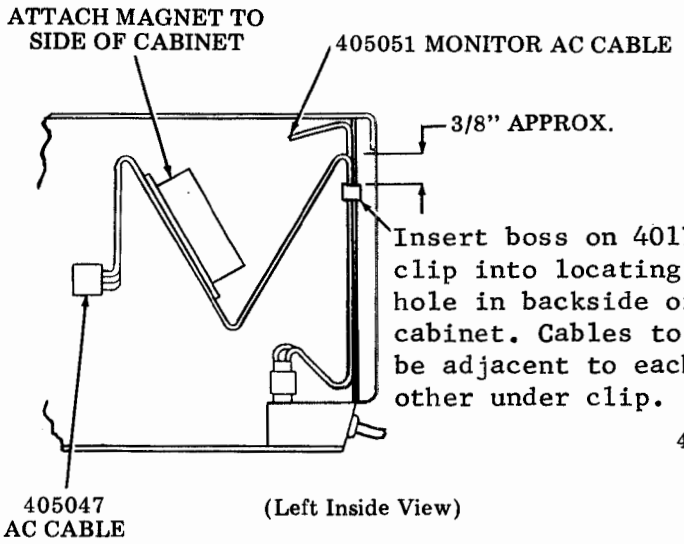

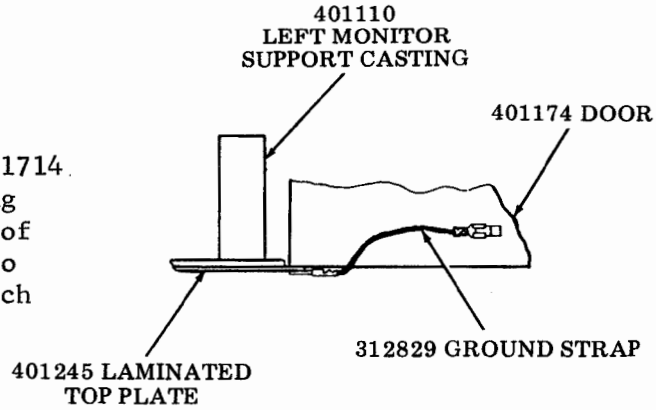

40CAB251/AB Keyboard Display Cabinet

D. TROUBLESHOOTING (Cont)

3. CABLE ROUTING (Cont)

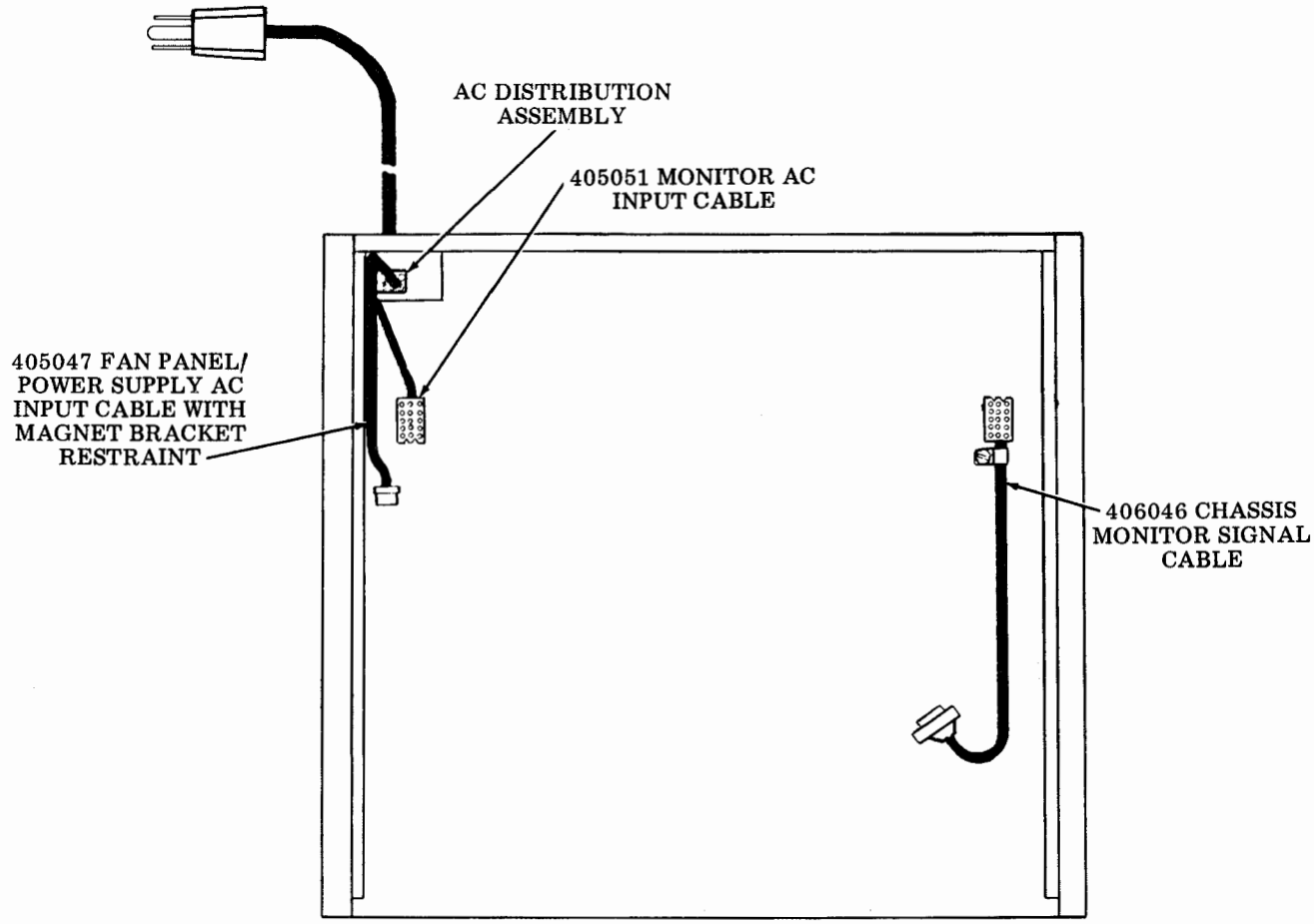

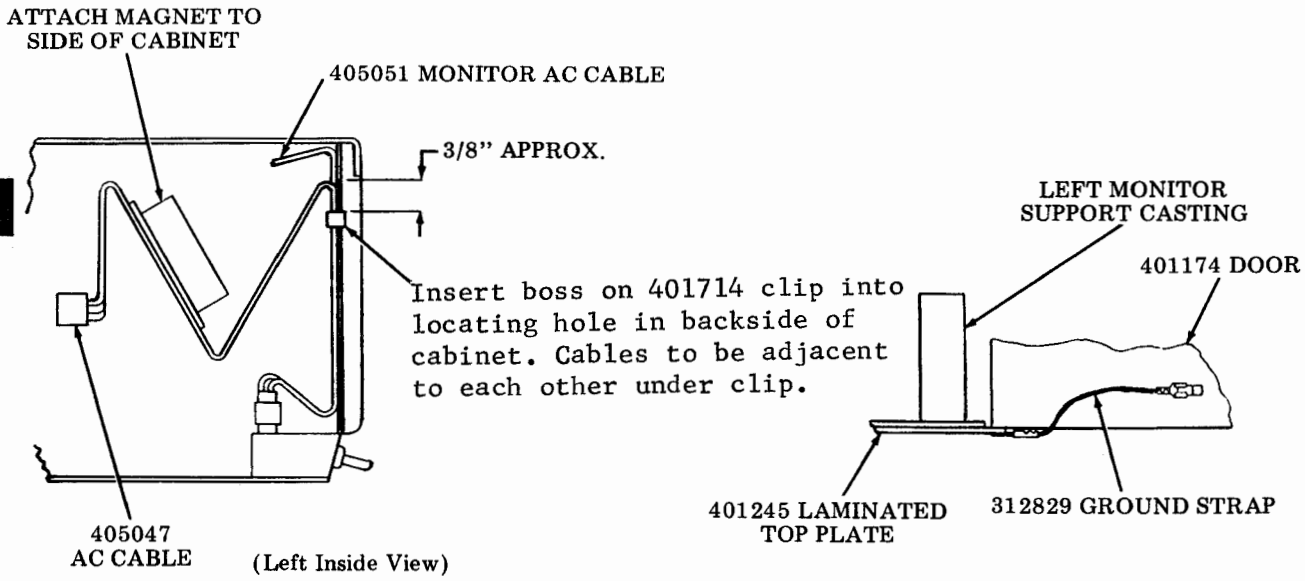

40CAB251/AE Keyboard Display Cabinet

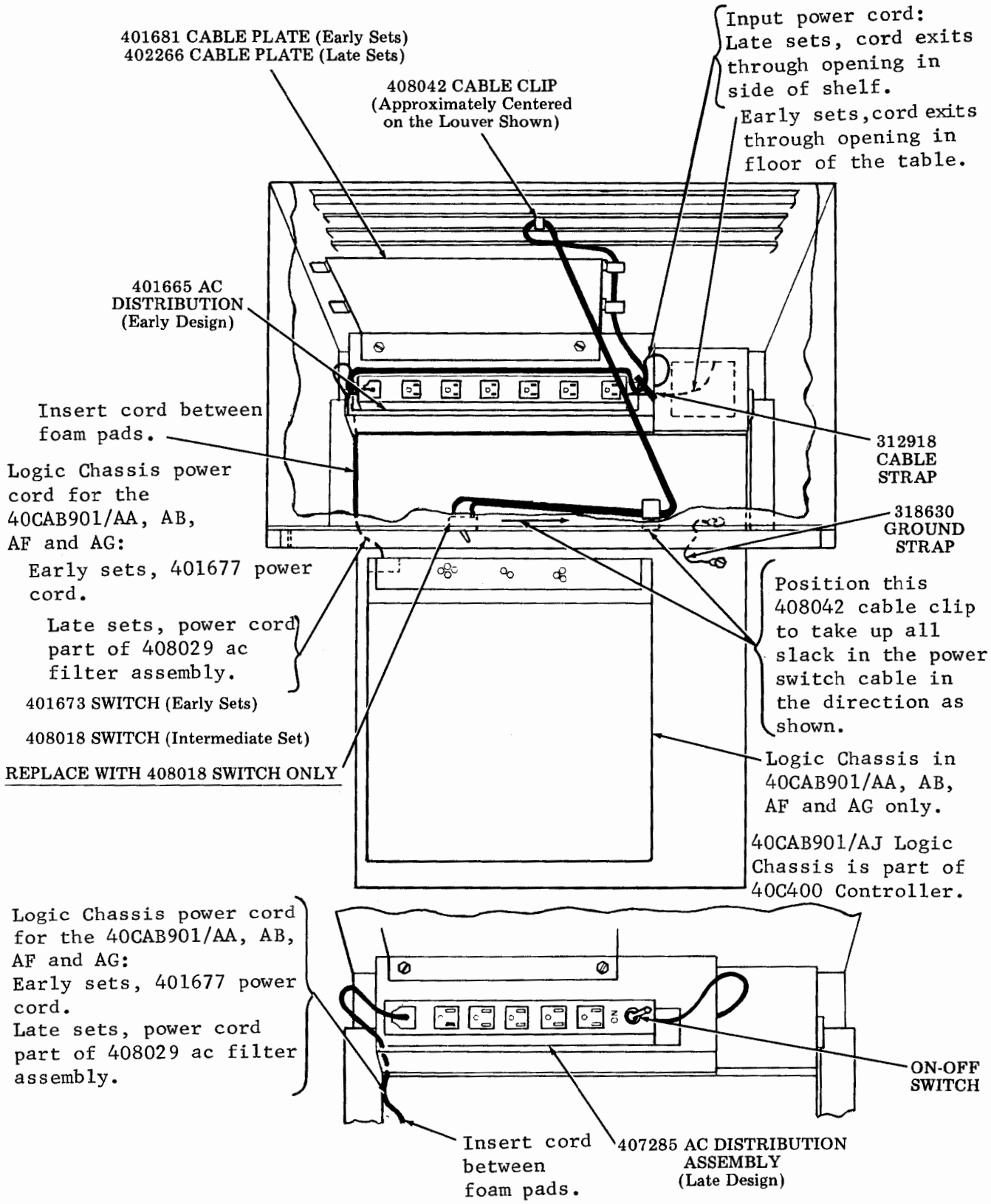

40CAB901/AA, AB, AF, AG and AJ

D. TROUBLESHOOTING (Cont)

3. CABLE ROUTING (Cont)

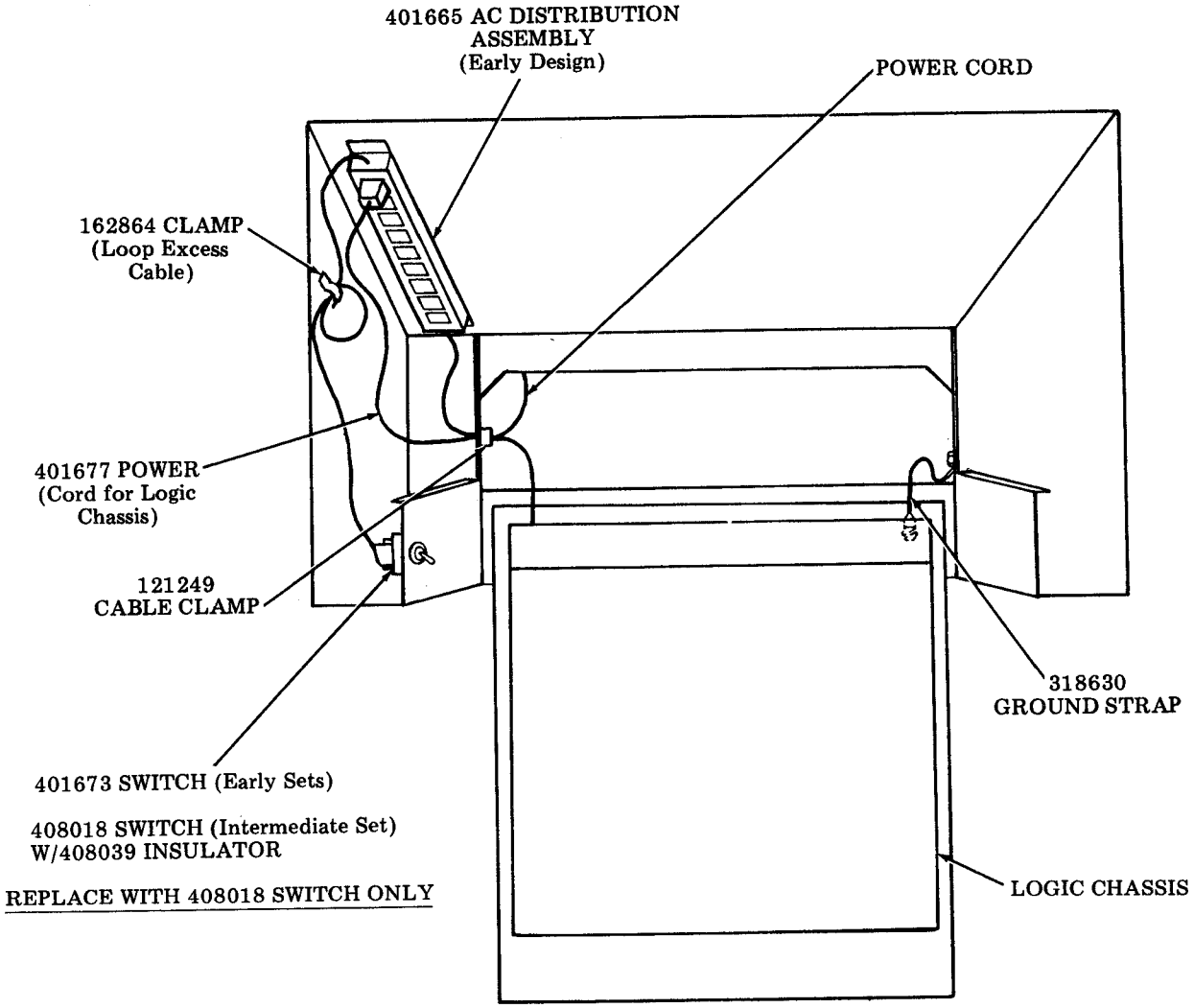

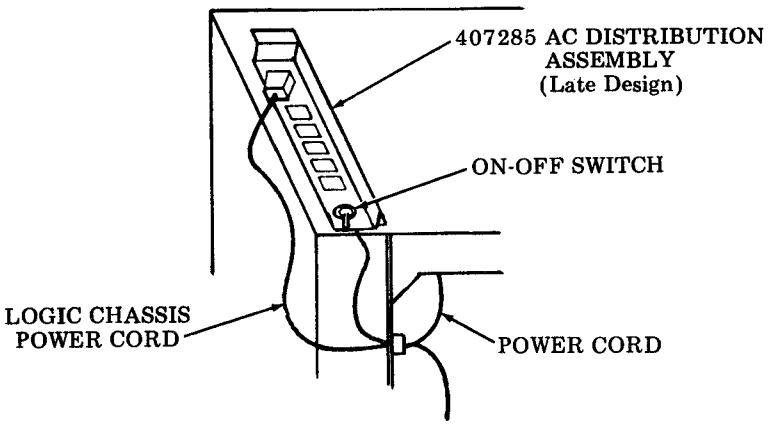

40CAB902/AB

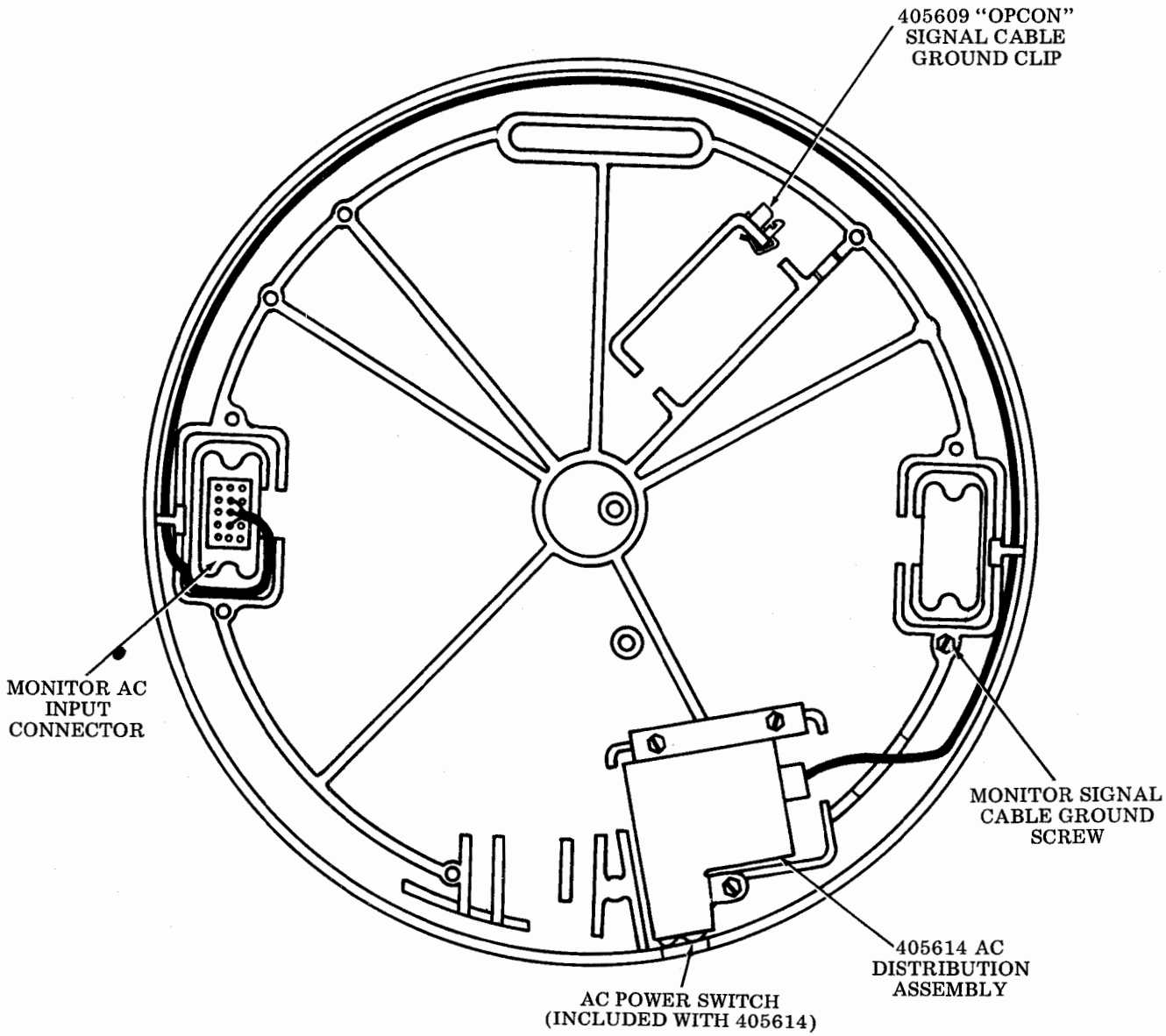

40 BSE101 Monitor Base

D. TROUBLESHOOTING (Cont)

4. TROUBLE ANALYSIS AND DIAGRAMS -- PAPER WINDER

TABLE A

EARLY DESIGN 40PWU101 PAPER WINDER

SYMPTOM	PROBABLE CAUSE
Paper too loose on paper winder (egg shaped roll).	Clutch Torque adjustment. Lubrication on clutch discs, clutch discs should be dry.
Paper edge ruffled on either side of roll.	Lateral Winder Position adjustment. Paper not tracking correctly on printer paper rollers.
Extraneous or irregular line feed on printer.	Clutch Torque adjustment.

TABLE B

LATE DESIGN 40PWU101 PAPER WINDER

SYMPTOM	PROBABLE CAUSE
Paper too loose on paper winder (egg shaped roll).	High Clutch Torque adjustment. Requirement not met.
Paper edge ruffled on either side of roll.	Lateral Winder Position adjustment. Paper not tracking correctly on printer paper rollers.
Extraneous or irregular line feed on printer.	High clutch torque crossing over before 3 inch diameter roll is on paper winder.

TABLE C

PAPER WINDER (40PWU102)

SYMPTOM	PROBABLE CAUSE
Paper too loose on paper winder (egg shaped roll).	High Motor Torque adjustment. Requirement not met.
Paper edge ruffled on either side of roll.	Lateral Winder Position adjustment. Paper not tracking correctly on printer paper rollers.
Extraneous or irregular line feed on printer.	High motor torque crossing over before 3-inch diameter roll is on paper winder.

40PWU101 Paper Winder -- Early Design

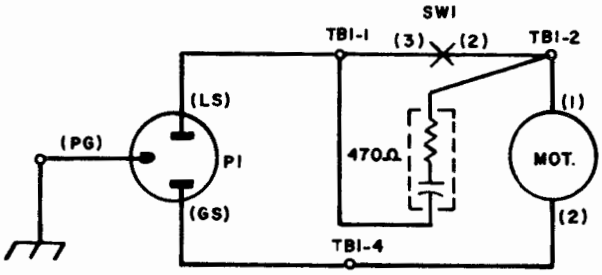

SCHEMATIC DIAGRAM

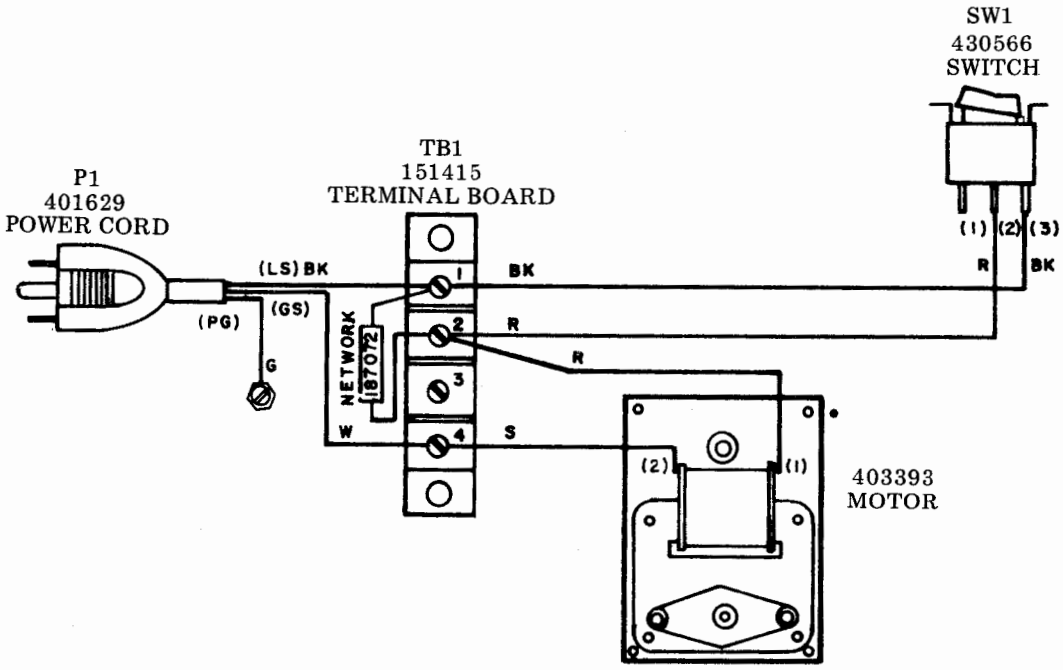

ACTUAL DIAGRAM

D. TROUBLESHOOTING (Cont)

4. TROUBLE ANALYSIS AND DIAGRAMS -- PAPER WINDER

40PWU101 Paper Winder (Late Design) and 40PWU102 Paper Winder

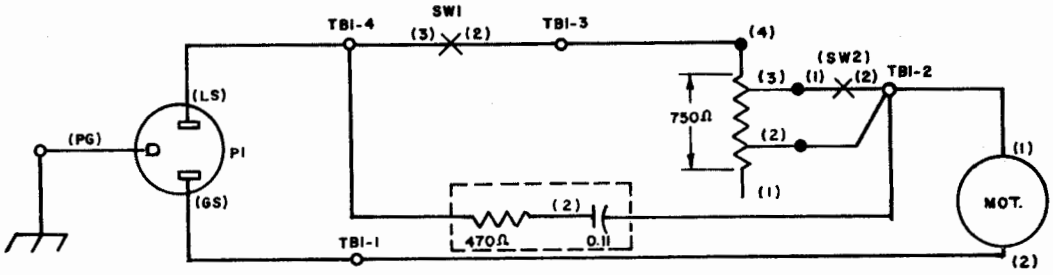

SCHEMATIC DIAGRAM

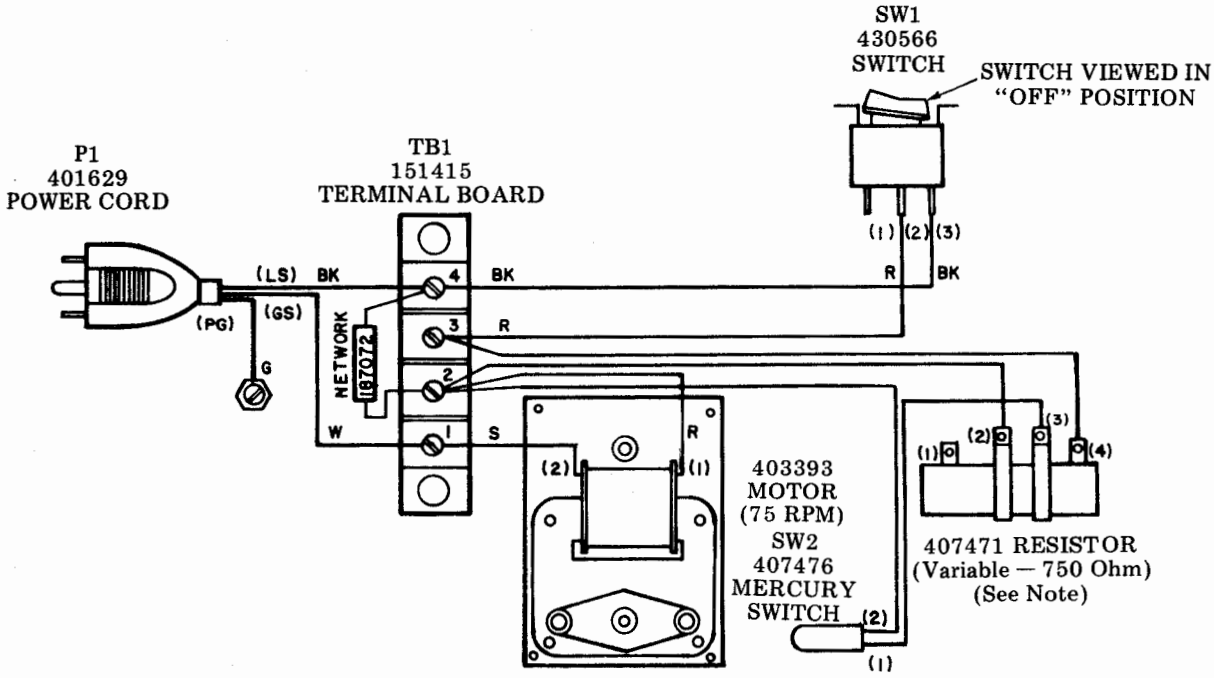

NOTE: For 110 rpm motor, use 407480 500 ohm variable resistor.

ACTUAL DIAGRAM

E. ADJUSTMENTS AND LUBRICATION

1. CABINET

A complete adjustment procedure should be read before attempting to make the adjustment. After an adjustment has been completed, be sure to tighten any nuts or screws that may have been loosened to facilitate the adjustment, unless otherwise instructed.

Some adjustments require access to areas where parts have to be removed. For removal of these parts, refer to DISASSEMBLY/REASSEMBLY AND PARTS.

All tolerances in the adjustments in this section, unless otherwise stated, are in inches.

The instruction "friction tight" means to tighten by hand only. Tools should not be used for friction tight adjustments.

AC Distribution Assembly (Early Design)

Requirement
Assembly should be flush to back wall of cabinet, consistent with free movement of the switch slide.

To Adjust
Loosen screw on bottom of cabinet. Meet requirement. Tighten screw.

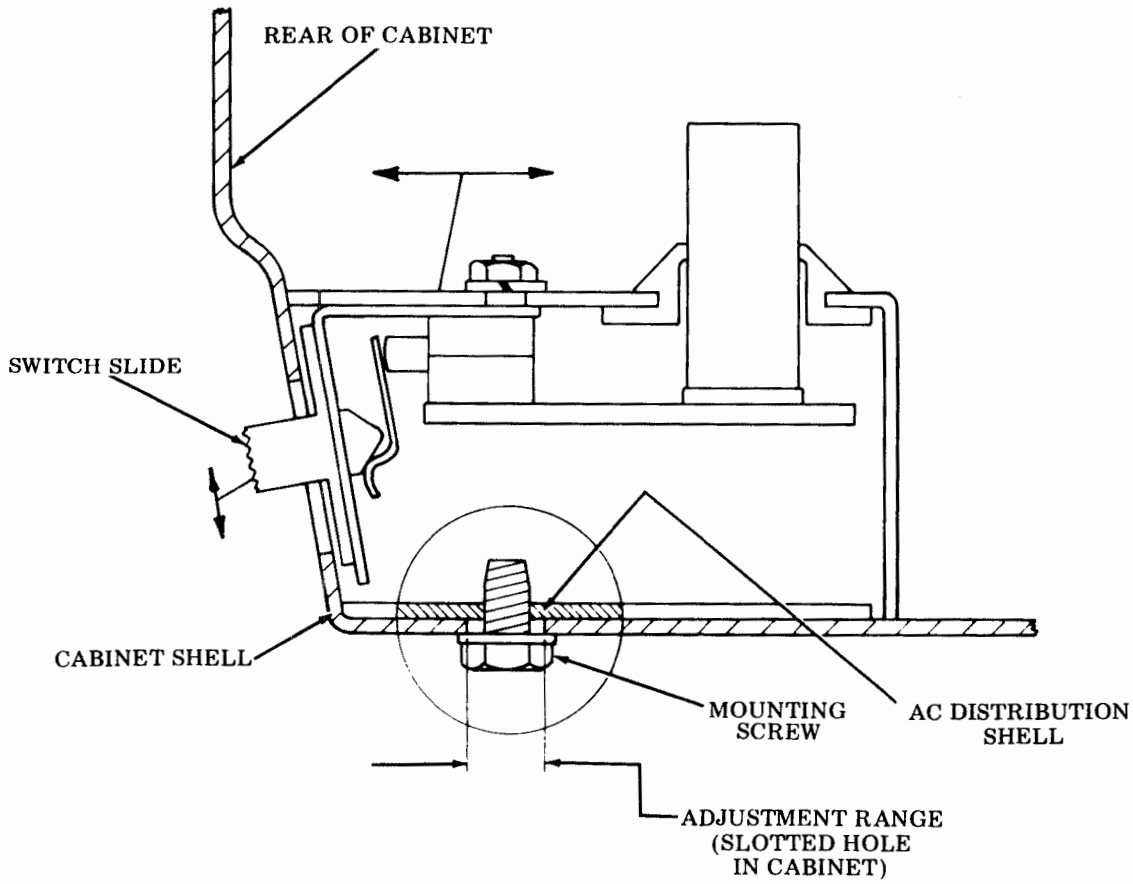

E. ADJUSTMENTS AND LUBRICATION (Cont)

1. CABINET (Cont)

Cradle Torsion Spring -- Friction Feed

NOTE: This is a factory adjustment, adjusted to the optimal force. If it becomes necessary to readjust, then proceed as follows.

- Printer is installed in the cradle assembly of the cabinet and it is latched up (service position).

Requirement

When left and right latches are released, printer should free-fall in the range of

Some to--Max 1-1/2 inch

when measured at the front of the printer base.

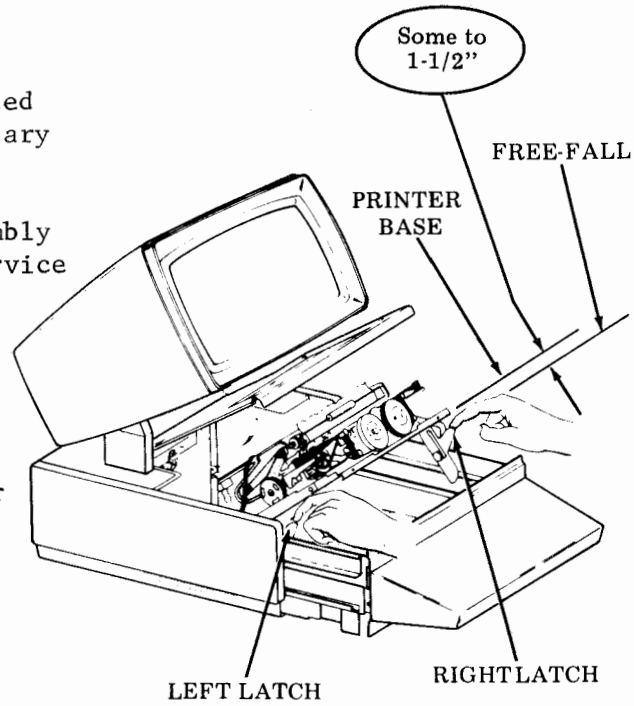

To Adjust

Remove printer from cradle assembly. Carefully remove shoulder screws (early design) or shoulder bushing and flat head screw that secure left and right latches to the printer cabinet.

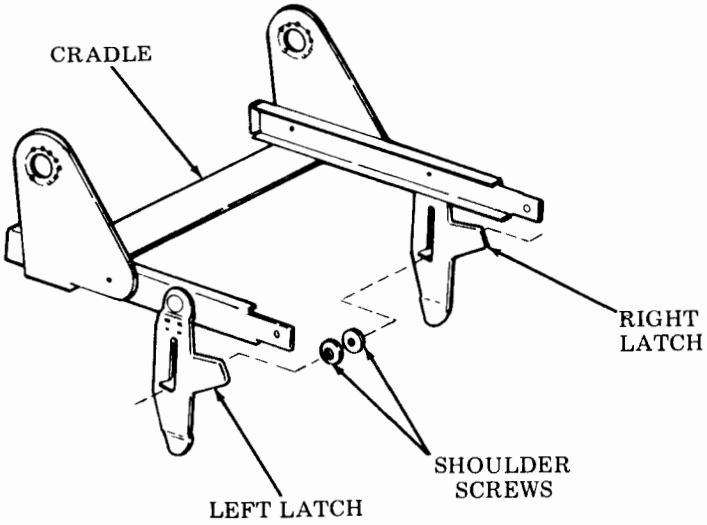

Cradle Torsion Spring -- Friction Feed (Cont)

To Adjust (Cont)

With cradle assembly channels positioned past vertical, check outside hook portion of spring relative to hook stops. Any adjustments that are made to increase or decrease spring force should be made with the intent of keeping both springs equal in force. In essence, clearance between the hooks of left and right torsion springs and stop bushings should be approximately equal. Therefore, to increase the force, torsion spring whose hook is farther away from stop bushing should be adjusted to decrease clearance. To decrease the force, torsion spring whose hook is closer to the stop bushing should be adjusted to increase clearance. Loosen pilot screw in the hub to be adjusted until pilot is out of the locating hole in the cradle upright. Rotate torsion spring to increase or decrease force.

NOTE: There are five holes in each cradle upright to accept pilot portion of pilot screw.

It may be necessary to reposition the pilot screw on hub if an angular adjustment of only 10 degrees is required from nominal. Reassemble with care.

LEGEND

,②, and ③ are positions for pilot screw on hub.

ⓐ,ⓑ,ⓒ,ⓓ, and ⓔ are positions on cradle.

① ⓑ Nominal position
① ⓐ Decrease force through 20° angle.
① ⓒ Increase force through 20° angle.
② ⓓ Increase force through 10° angle.
② ⓔ — —

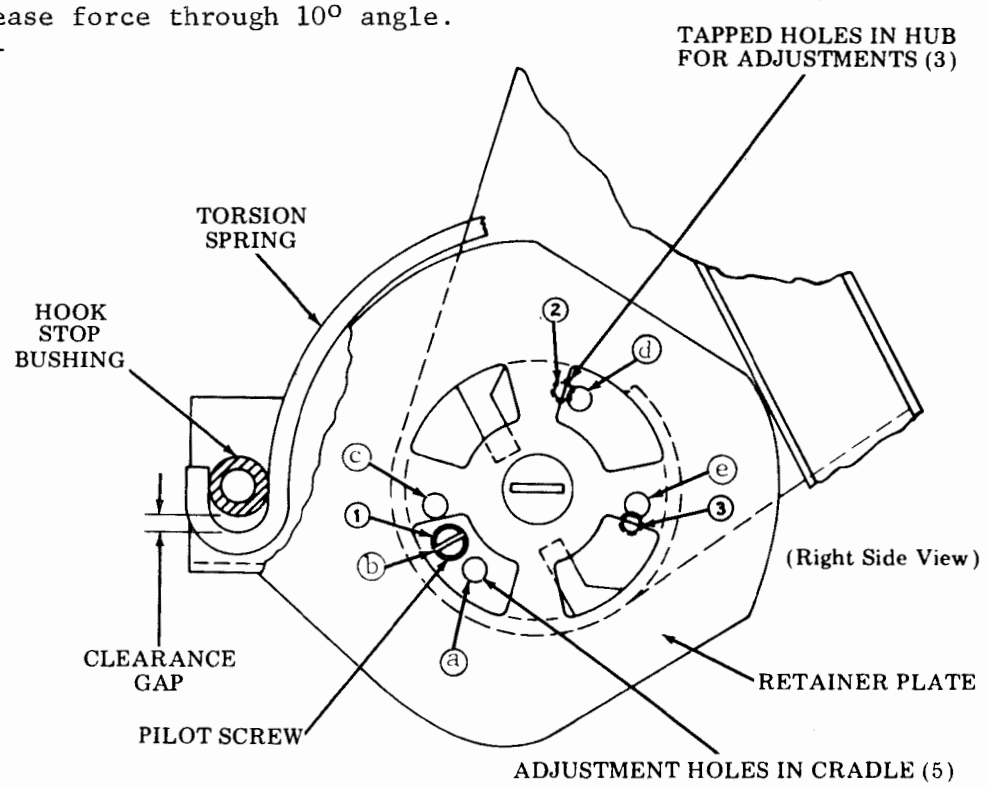

E. ADJUSTMENTS AND LUBRICATION (Cont)

1. CABINET (Cont)

Cradle Torsion Spring -- Tractor Feed (80-Column)

NOTE: This is a factory adjustment, adjusted to the optimal force. If it becomes necessary to readjust, then proceed as follows.

(1) Requirement

With the printer in the operate position, when the latch lever on the right and left side of the cradle assembly are pushed to the rear, the printer and the cradle should move out of the latching position.

(2) Requirement

With the printer in the service position, when the left and right latch lever on each side of the cradle assembly are pushed to the rear, the printer and the cradle should move out of the latching position by their own weight or a force of Max. 16 oz applied to each side of the cradle front tip.

To Adjust

Use printer to check adjustment. Remove printer from cradle assembly. If cradle assembly fails to remain in up position, raise it up unitl it latches. Carefully remove shoulder screws that secure left and right latches to the printer cradle.

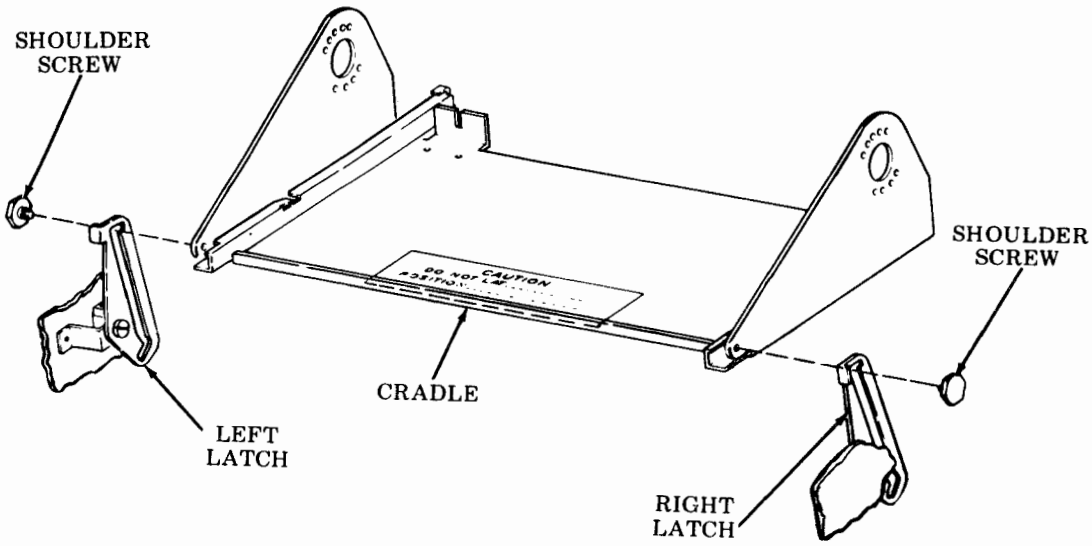

Cradle Torsion Spring -- Tractor Feed (80-Column) (Cont)

To Adjust (Cont)

With cradle assembly channels positioned past vertical, check outside hook portion of spring relative to hook stops. Any adjustments that are made to increase or decrease spring force should be made with the intent of keeping both springs equal in force. In essence, clearance between hooks of left and right torsion springs and stop bushings should be approximately equal. Therefore, to increase the force, torsion spring whose hook is farther away from stop bushing should be adjusted to decrease clearance. To decrease the force, torsion spring whose hook is closer to the stop bushing should be adjusted to increase clearance. Loosen pilot screw in the hub to be adjusted until pilot is out of the locating hole in the cradle upright. Rotate torsion spring to increase or decrease force.

NOTE: There are nine holes in each cradle upright to accept pilot portion of pilot screw.

It may be necessary to reposition the pilot screw on hub if an angular adjustment of only 10 degrees or 30 degrees is required from nominal. Reassemble with care.

LEGEND:

①, ②, and ③ are positions for pilot screw on the hub.
ⓐ, ⓑ, ⓒ, ⓓ, ⓔ, ⓕ, ⓖ, ⓗ, and ⓘ are positions on the cradle.

①	ⓐ	Nominal position.
②	ⓑ	Increase force through 10° angle.
①	ⓒ	Increase force through 20° angle.
②	ⓓ	Increase force through 30° angle.
①	ⓔ	Increase force through 40° angle.
③	ⓕ	Decrease force through 10° angle.
①	ⓖ	Decrease force through 20° angle.
③	ⓗ	Decrease force through 30° angle.
①	ⓘ	Decrease force through 40° angle.

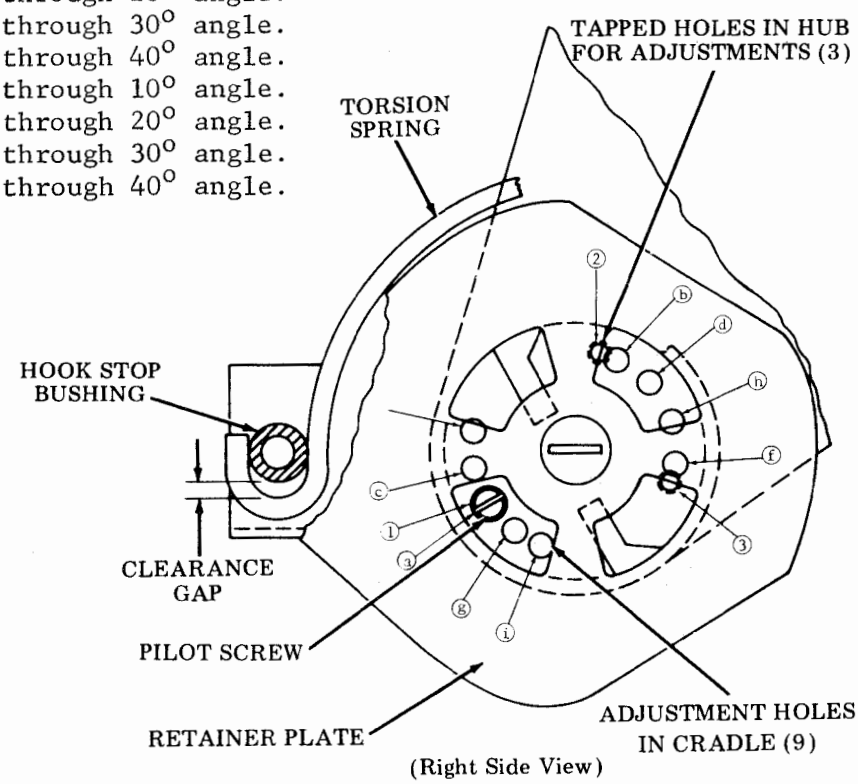

E. ADJUSTMENTS AND LUBRICATION (Cont)

1. CABINET (Cont)

Cradle Torsion Spring -- Tractor Feed (132-Column)

(1) Requirement
With the printer in the operate position, when the latch lever on the right and left side of the cradle assembly are pushed to the rear, the printer and the cradle should move out of the latching position.

(2) Requirement
With the printer in the service position, when the left and right latch lever on each side of the cradle assembly are pushed to the rear, the printer and the cradle should move out of the latching position by their own weight or a force of Max. 16 oz applied to each side of the cradle front tip.

To Adjust
Turn the adjustment screw (one on each side of the cradle) counterclockwise to increase the torsion spring force and clockwise to decrease the torsion spring force. Any adjustments to increase or decrease the spring force should be made with the intent of keeping both springs in equal tension.

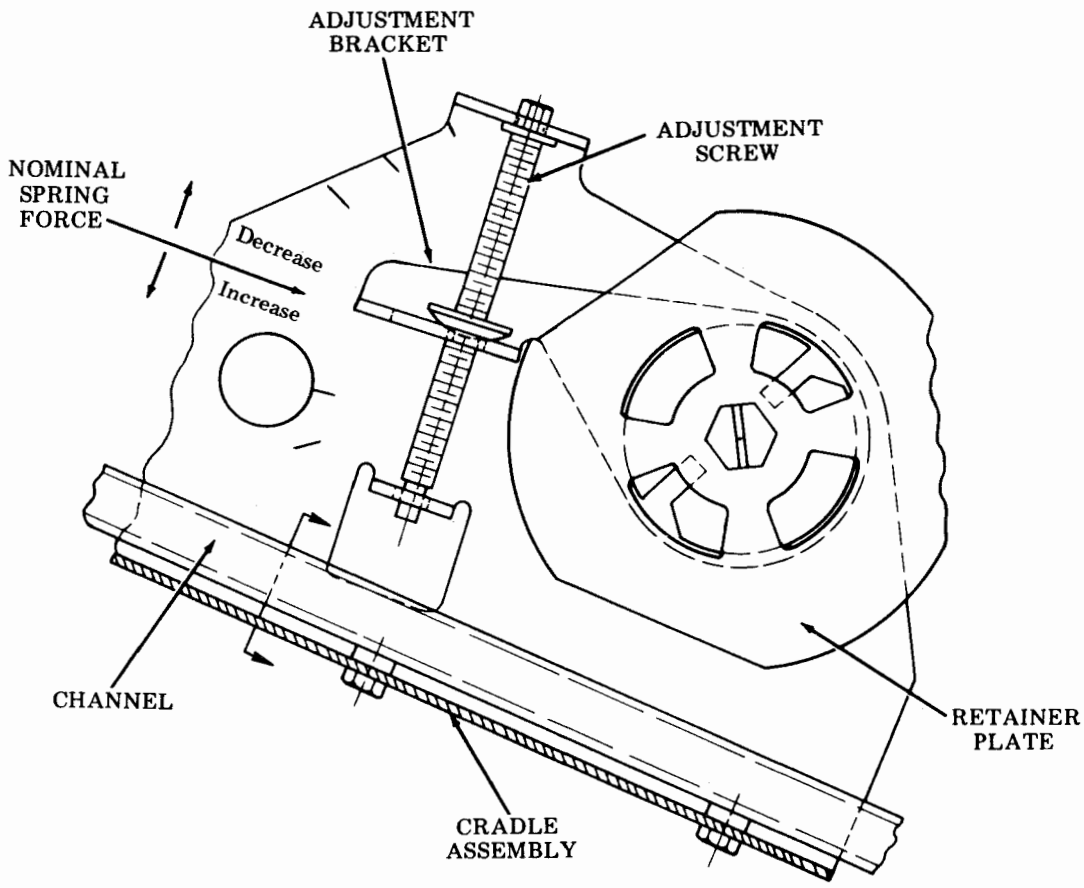

Paper Exit Gap -- Noise Reducing Friction Feed

- Paper exit door closed and latched.
- Cabinet dome in the open position.

Requirement

Paper exit gap between clear plastic door and stainless steel paper guide should be

Min 0.078 inch--Max 0.125 inch

through the entire width and length of the path through which the paper travels.

To Adjust

Loosen the two mounting screws friction tight. Use pry points to raise or lower the door latches to meet requirement. Tighten the two mounting screws.

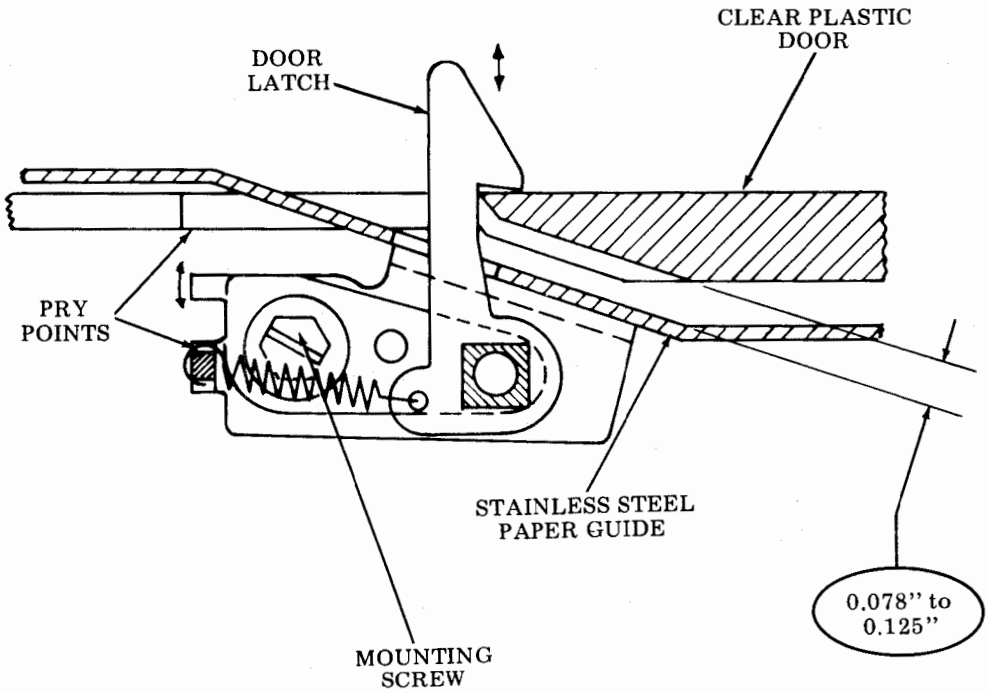

E. ADJUSTMENTS AND LUBRICATION (Cont)

1. CABINET (Cont)

Dome Adjustment -- Noise Reducing Friction Feed

- Dome closed and latched

Requirement

Gap "A" must be equal to Gap "B" within 0.062 inch. Dome may be flush, overflush (0.030 inch) or underflush (0.030 inch) with respect to trim band (both sides).

To Adjust

Loosen five dome mounting screws friction tight. Position dome to meet requirement. Tighten mounting screws.

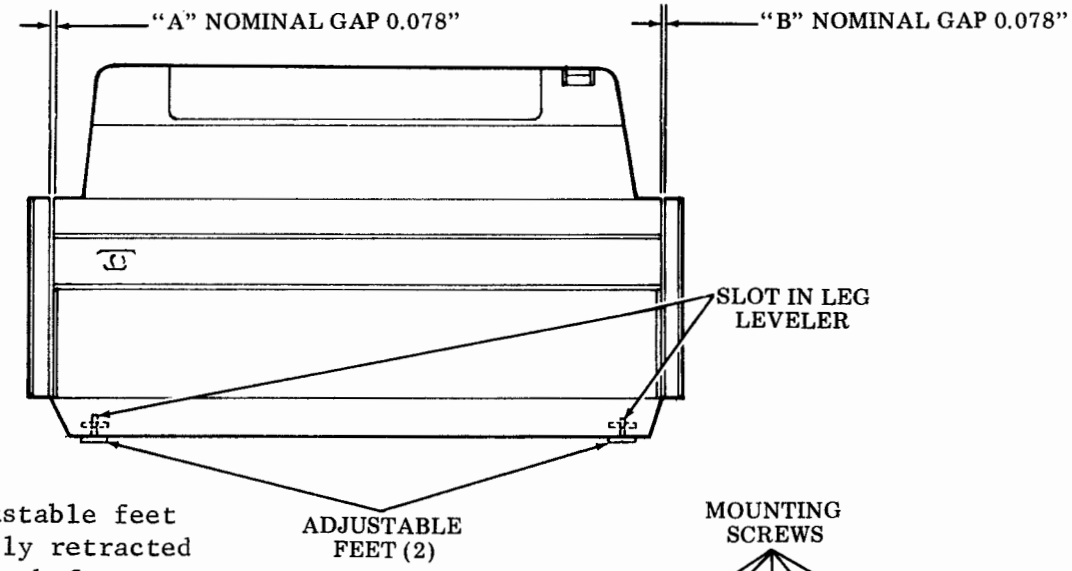

NOTE: Adjustable feet must be fully retracted into cabinet before attempting dome adjustment.

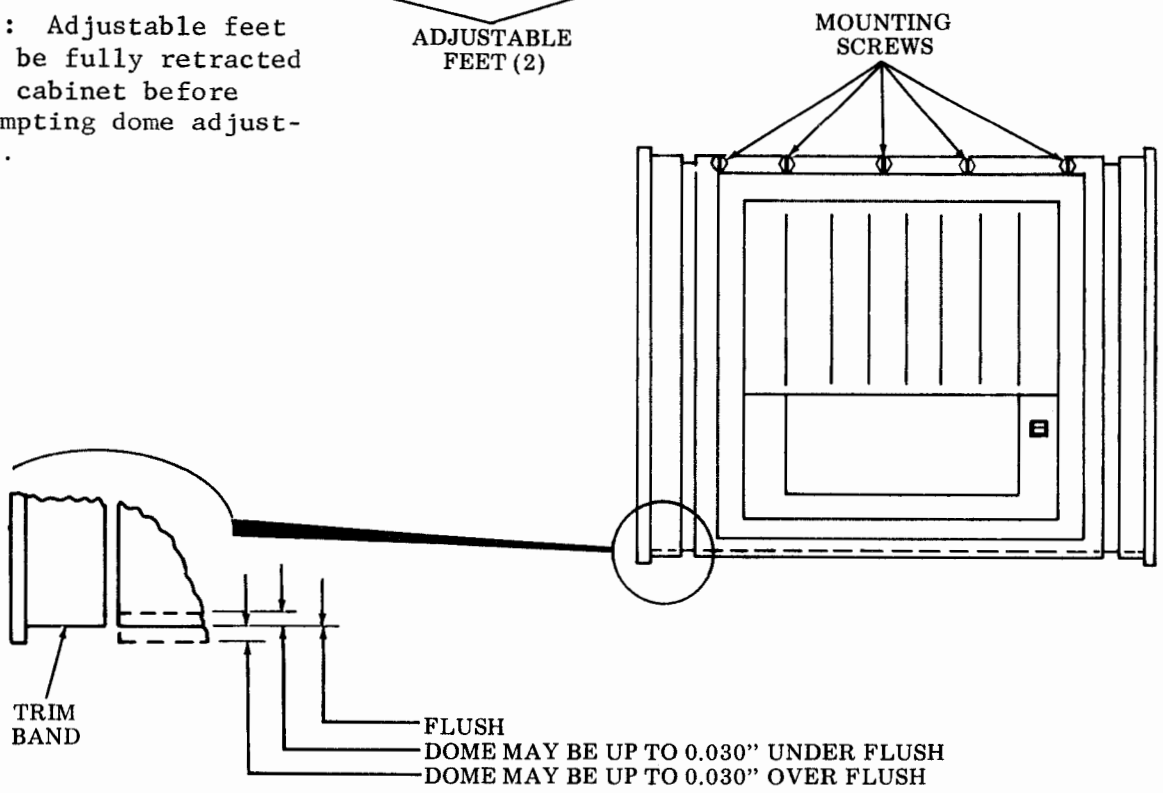

Top Cover Vertical Adjustment -- Forms Access Cabinet

Requirement

With the cabinet top cover in the closed position, the cover should rest on the front gasket and be parallel to the cabinet surfaces as gauged by eye.

To Adjust

With the four cabinet top cover hinge mounting nuts friction tight, lift or lower the rear edge of the cover until the requirement is met. Tighten the mounting nuts.

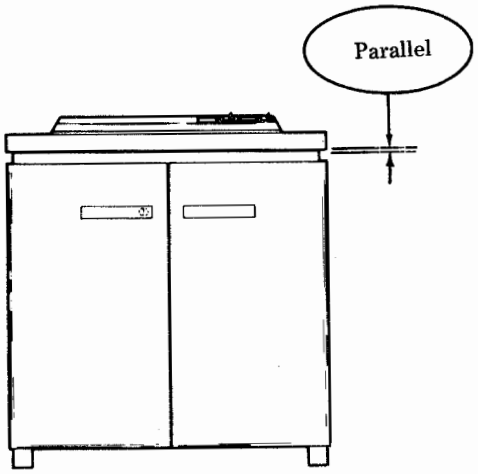

(Front View)

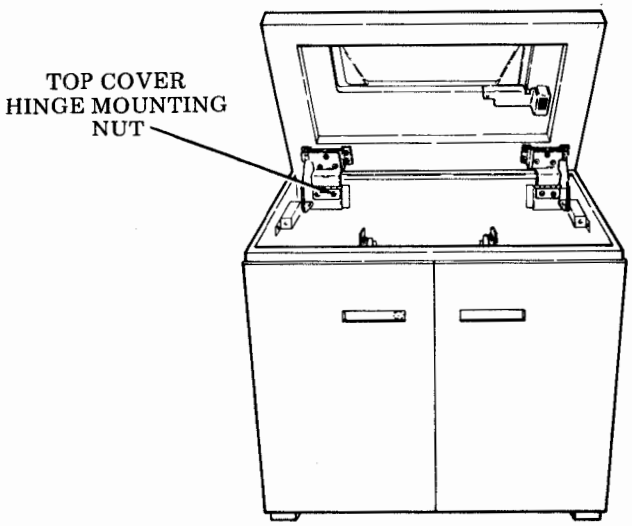

E. ADJUSTMENTS AND LUBRICATION (Cont)

1. CABINET (Cont)

Top Cover Horizontal Adjustment -- Forms Access Cabinet

Requirement

With the cabinet top cover in the closed position, the cabinet with doors should extend beyond the top cover equally front to rear and equally left to right as gauged by eye (approximately).

To Adjust

With the six top cover hinge mounting screws friction tight, position the top cover left to right and front to rear to meet the requirement. Tighten the six mounting screws.

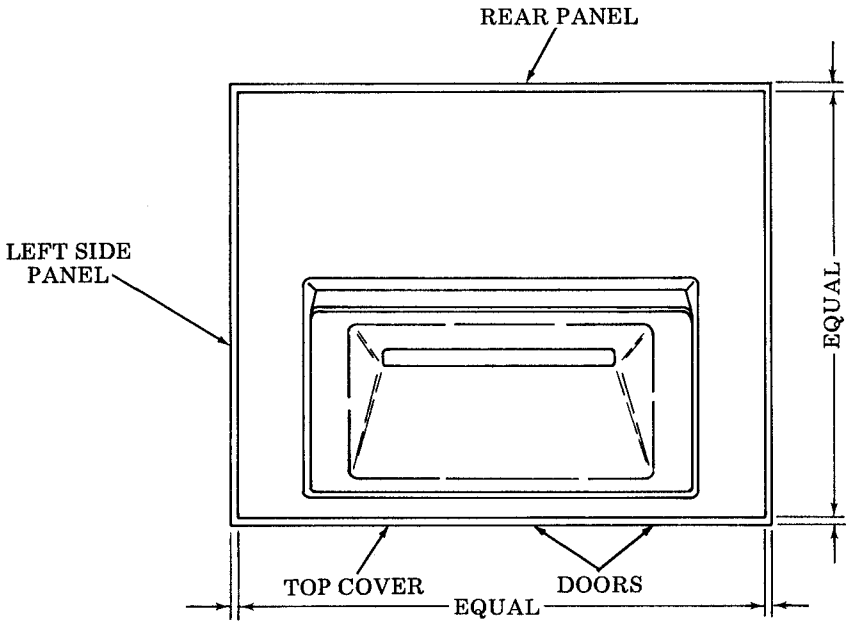

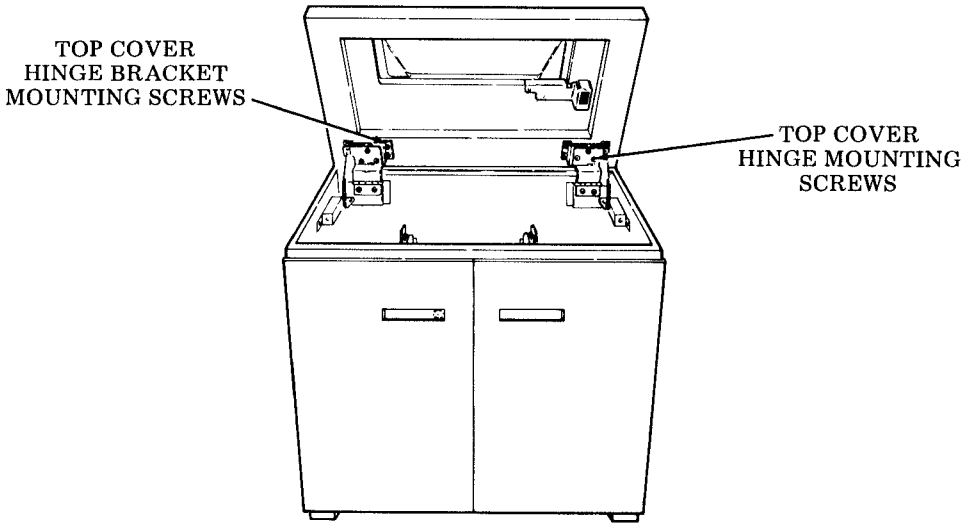

Top Cover Left and Right Counterbalance Spring Adjustment -- Forms Access Cabinet

Requirement

With top cover almost closed (within 3 to 4 inches), the top will not move by gravity when released.

To Adjust

Turn each counterbalance spring adjusting screw approximately an equal number of turns until requirement is met. Do not back off screws more than four full turns from a complete clamp position.

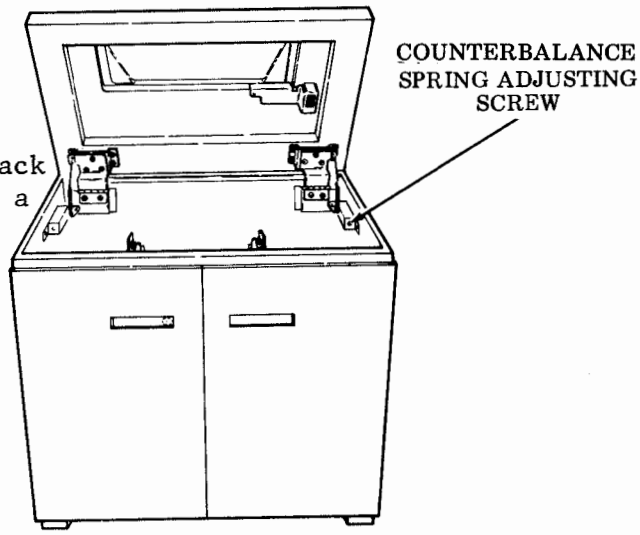

Left and Right Front Access Door Position Adjustment -- Forms Access Cabinet

Requirement

The gap between cabinet side panel and respective door should be

Min 0.070 inch--Max 0.090 inch

when measured near top and bottom of door hinge ends.

To Adjust

With the door hinge mounting screws friction tight, position the door forward or rearward to meet requirement. Tighten the hinge mounting screws.

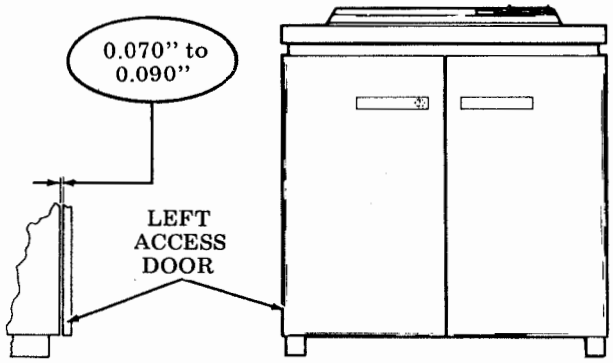

E. ADJUSTMENTS AND LUBRICATION (Cont)

1. CABINET (Cont)

Left Front Access Door Magnet Latching Adjustment -- Forms Access Cabinet

Requirement

With the left door overlapping the right door and both doors in the closed position, the upper and lower magnets should be in contact with their respective strike plates while holding the right door flange firmly against the cabinet engaging surface.

To Adjust

With top and bottom magnet mounting screws (four) friction tight, close the left door overlapping the right door flange. With gentle pressure applied to left door, secure the magnets. Magnets may be secured through the top of the cabinet.

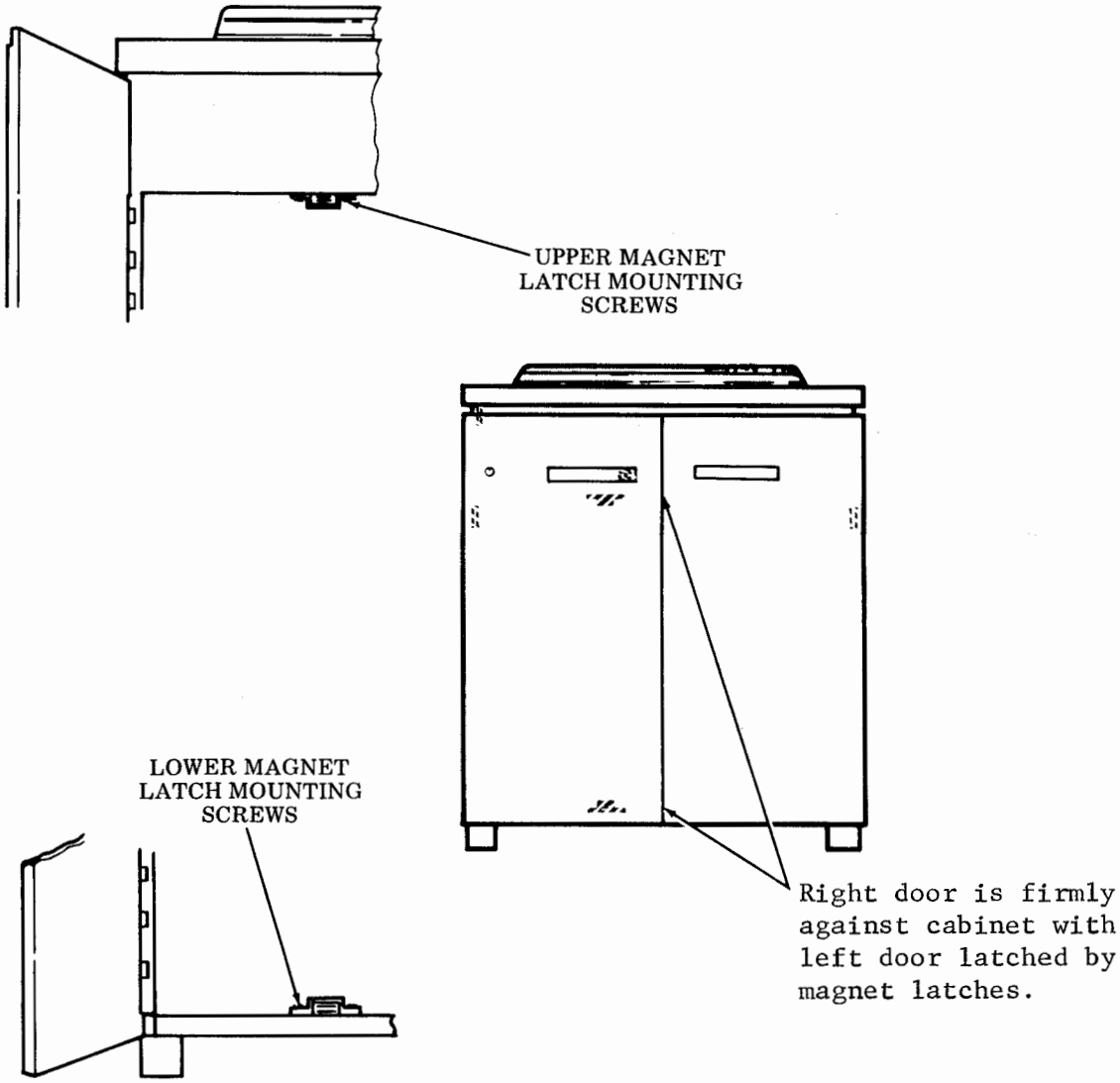

Top Cover Latch and Latch Strike Plate Adjustment -- Forms Access Cabinet

(1) Requirement
As the top cover latch is slowly brought into contact with the latch strike plate, contact should be approximately
Min 1/4 inch--Max 1/2 inch
of the sloped surface of the latch as gauged by eye.

To Adjust
With the latch mounting bracket screws friction tight, position mounting bracket forward or rearward to meet the requirement. Tighten the mounting screws.

(2) Requirement
With the top cover gently lowered onto the cabinet gasketing, the latch should engage the strike plate with an audible sound of latching.

To Adjust
With latch strike plate mounting screws friction tight, position the strike plate up or down to meet requirement. Tighten mounting screws.

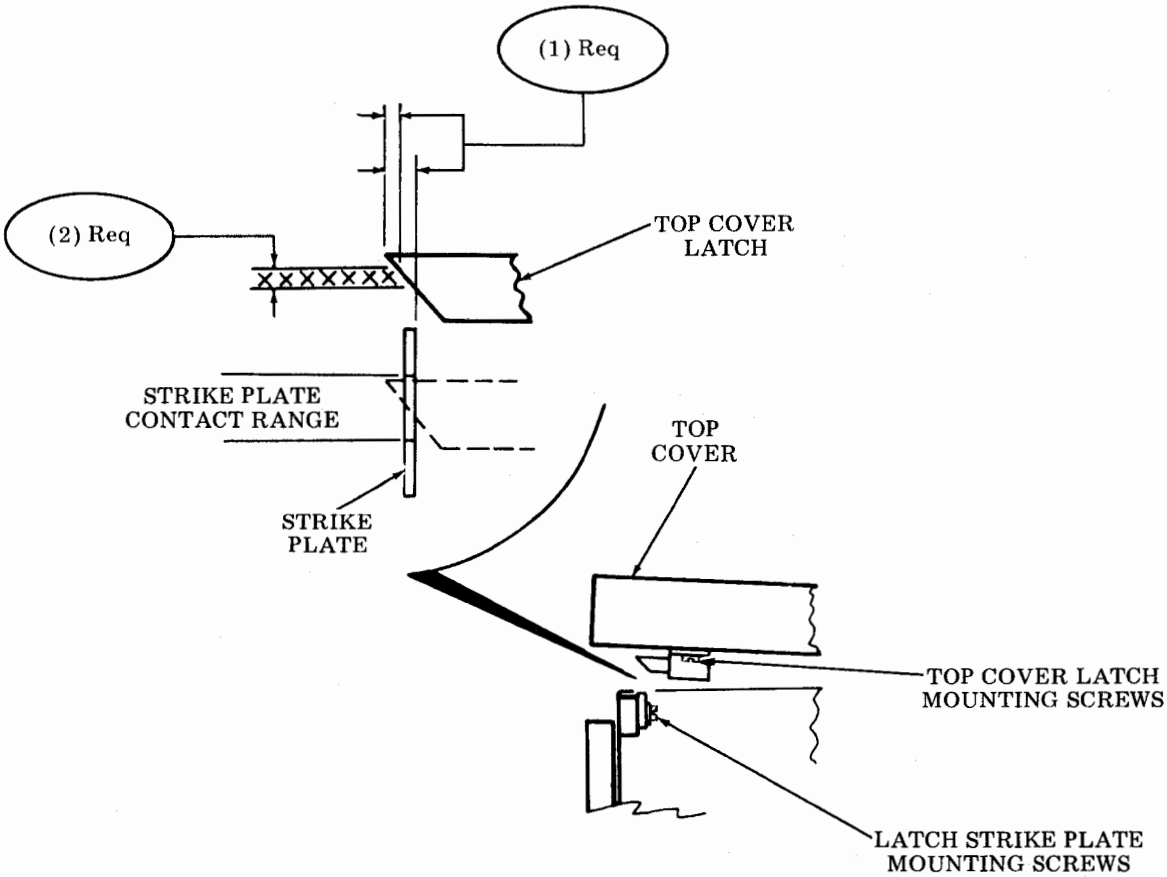

E. ADJUSTMENTS AND LUBRICATION (Cont)

1. CABINET (Cont)

Top Cover, Left and Right Front Door Interlock Switch Adjustments -- Forms Access Cabinet

Top Cover Interlock Switch

(1) Requirement
With the top cover in its latched position, the Interlock switch should be in the "closed" mode and should move into its "open" mode when the top cover is raised above the latched position.

Left Front Door Interlock Switch

(2) Requirement
With the left door in the latched position, the Interlock switch should be in the "closed" mode and should move into its "open" mode when the left door is opened.

Right Front Door Interlock Switch

(3) Requirement
With the right door in the latched position, the Interlock switch should be in the "closed" mode. When the right door is open and held overlapping the closed left door, the Interlock switch should be in the "open" mode.

To Adjust
With the switch assembly mounting screws friction tight, locate the assembly closer to or farther away from the activating bracket to meet the requirement. Tighten the two mounting screws.

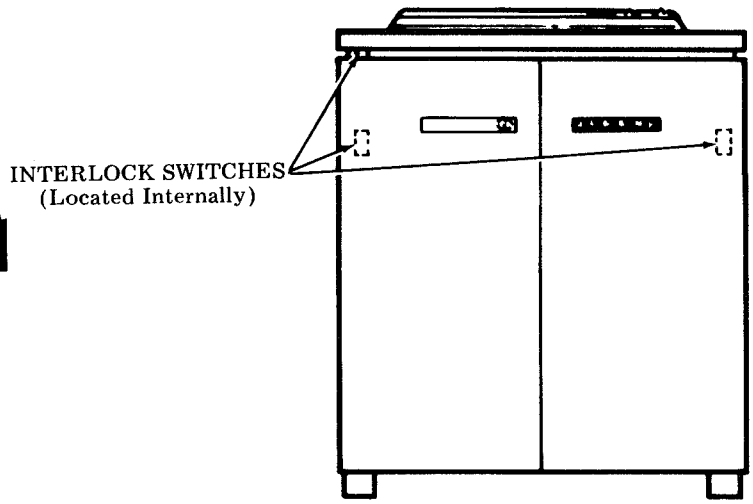

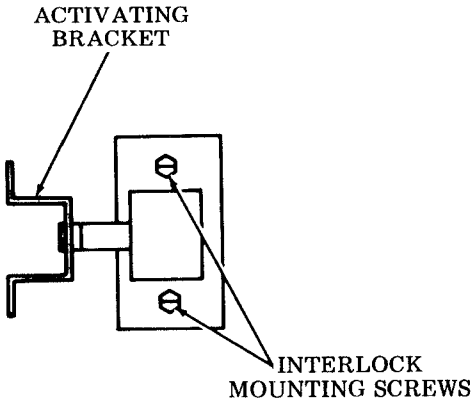

Printer Vertical Positioning Adjustment -- Forms Access Cabinet

Requirement

With a scale resting on the printer tear bar top surface and against the front edge of forms chute opening, the tear bar top surface should be located

Min 3/32--Max 5/32 inch

below the form of the cabinet form chute.

To Adjust

Loosen the six intermediate rail bracket mounting screws friction tight, place the blade of a screwdriver between frame and intermediate rail, pry intermediate rail assembly up at alternate left and right front corners until adjustment is made, tightening the forward most screws. After making adjustment tighten remaining screws.

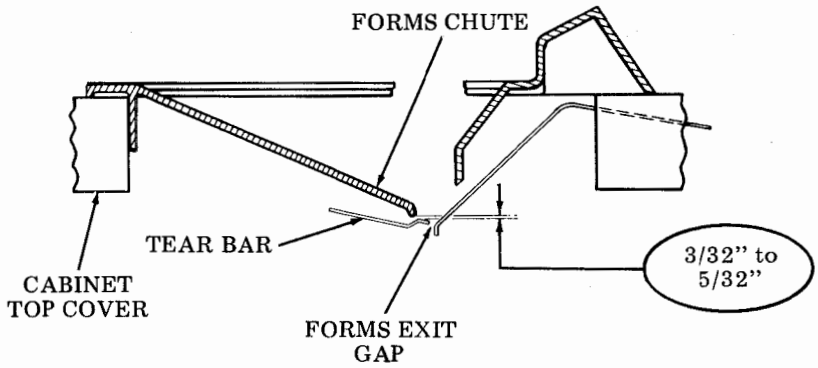

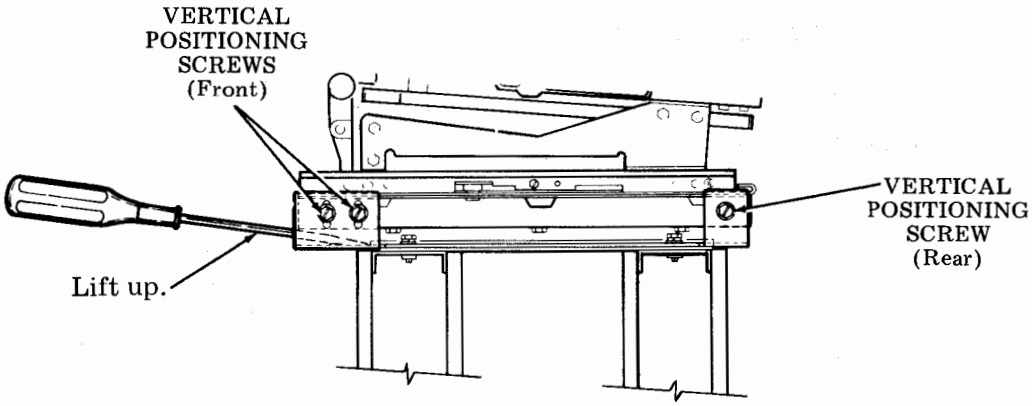

E. ADJUSTMENTS AND LUBRICATION (Cont)

1. CABINET (Cont)

Printer Forward Positioning Adjustment -- Forms Access Cabinet

NOTE: The printer should be positioned and latched in its rearmost location on the rail assembly frame for this adjustment.

Requirement
The printer forms exit gap should be located
Min 1/2--Max 3/4
of the way back in the forms chute opening as gauged by eye.

To Adjust
With the four rail assembly frame mounting screws friction tight, move printer rail assembly frame forward or rearward to meet adjustment. Tighten the four mounting screws.

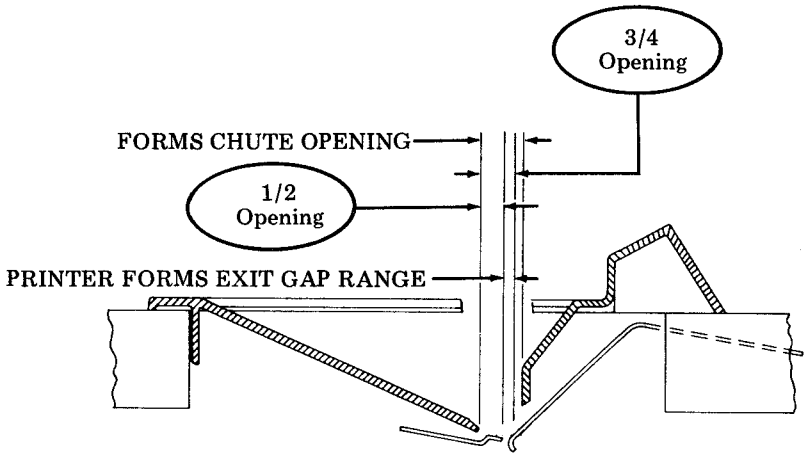

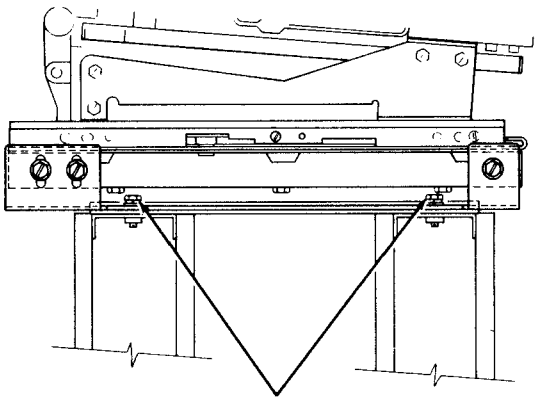

2. PAPER WINDER

- Adjustments are common to all paper winders, unless otherwise specified.

NOTE: Remove paper winder motor cover when making the following adjustments.

Paper Spool Endplay

Requirement

With the plastic pilot seated in the retainer spring on the right and the drive pin seated in the spool hub on the left, there should be a clearance of

Min Some--Max 0.040 inch

between the plastic pivot and frame when the endplay in the motor shaft is taken up to make the clearance a minimum.

To Adjust

Loosen the two setscrews that secure the clutch assembly to the motor shaft. Position the clutch assembly to meet the requirement. Tighten both setscrews. Check that the spool drive pin seats in the spool hub and that the spool rotates freely through the complete revolution.

WARNING: DO NOT DISTORT THE VERTICAL ENDS OF THE WINDER FRAME WHEN MAKING THE ADJUSTMENT.

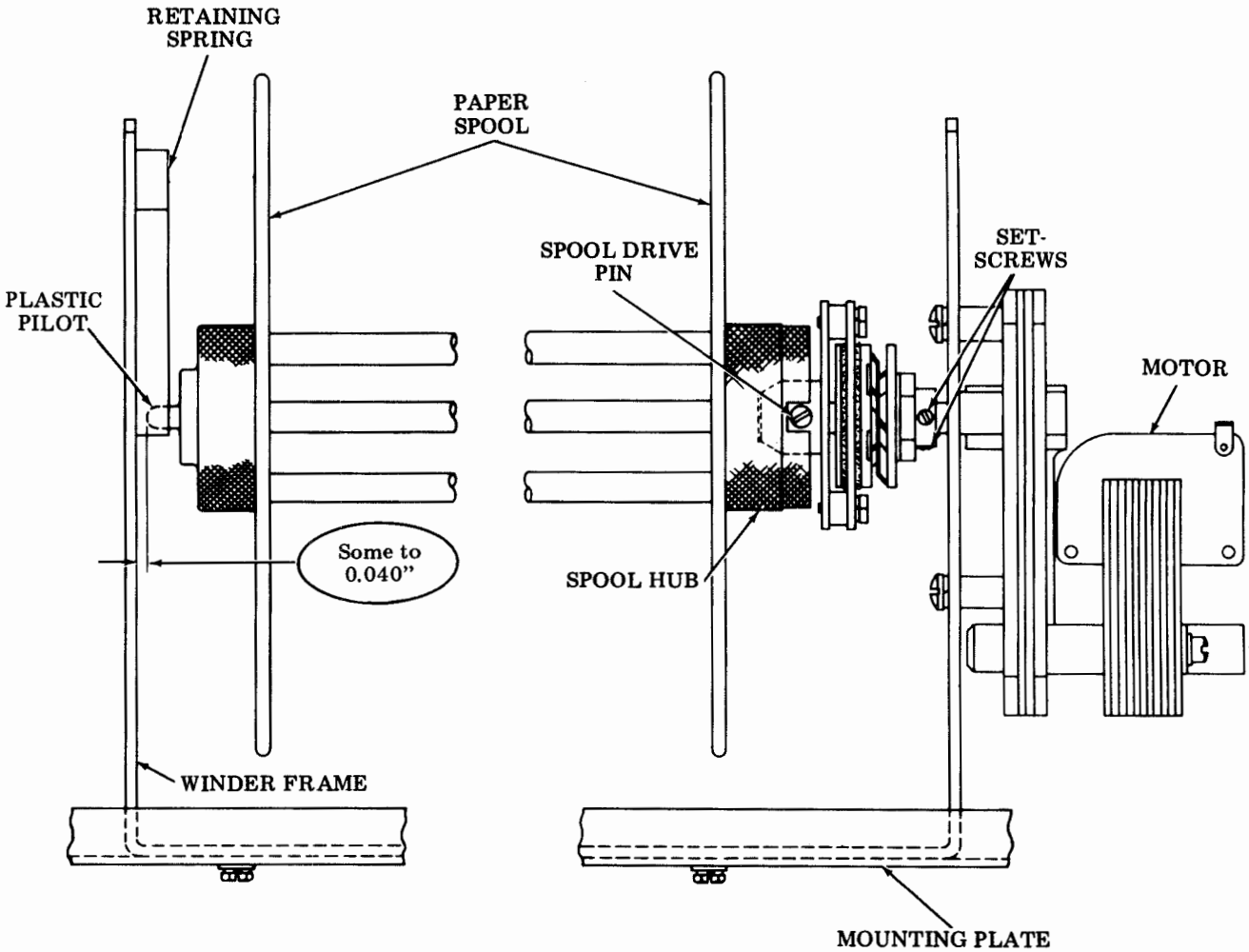

(Rear View)

E. ADJUSTMENTS AND LUBRICATION (Cont)

2. PAPER WINDER (Cont)

Lateral Winder Position (40PWU101)

Requirement
The paper spool flange must align with spent paper exiting from printer, and the paper should be flat on cabinet top when being wound.

To Adjust
Loosen the three winder assembly mounting screws. Position the winder left or right to meet requirement.

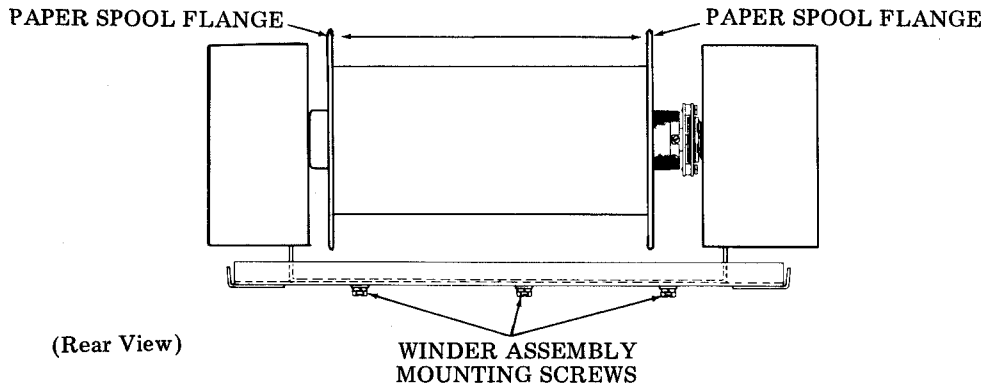

Clutch Torque (40PWU101 Early Design)

NOTE: Remove paper spool assembly and motor cover.

Requirement
It should require
Min 7 ounces--Max 11 ounces
to stop rotation of the drive brace with hub.

To Adjust
Operate the winder and hook a spring scale over one of the spacers between the drive disc and drive brace with hub. Loosen the locknut and rotate the friction nut in or out to meet the requirement. Tighten the locknut.

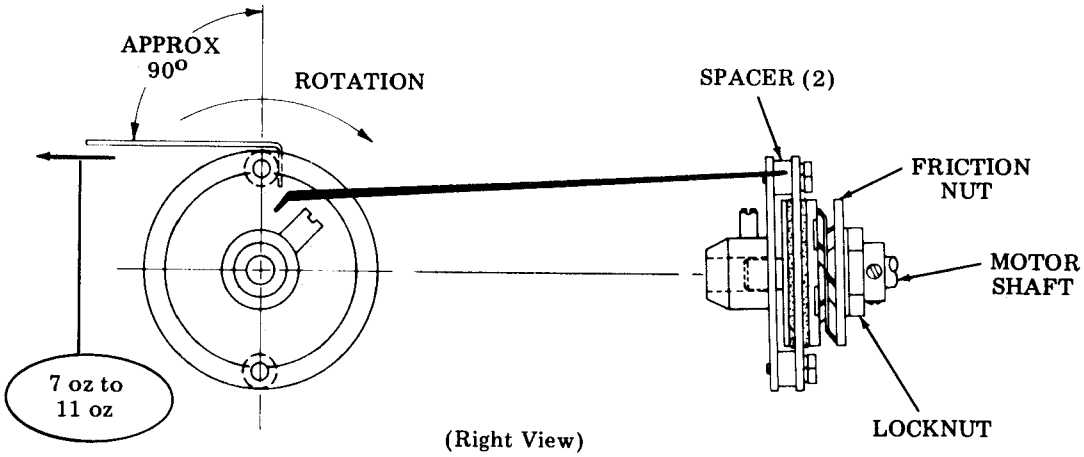

Clutch Torque (40PWU101 Late Design)

Requirement
With motor side of the clutch in a locked position (use spanner wrench on friction nut) and spring scale hook applied over one of the spacers on the clutch, it should require
Min 40 ounces--Max 50 ounces
to move drive flange.

NOTE: Take up play in direction of pull before reading scale.

To Adjust
Loosen locknut. Rotate friction nut in or out to meet requirement. Tighten locknut.

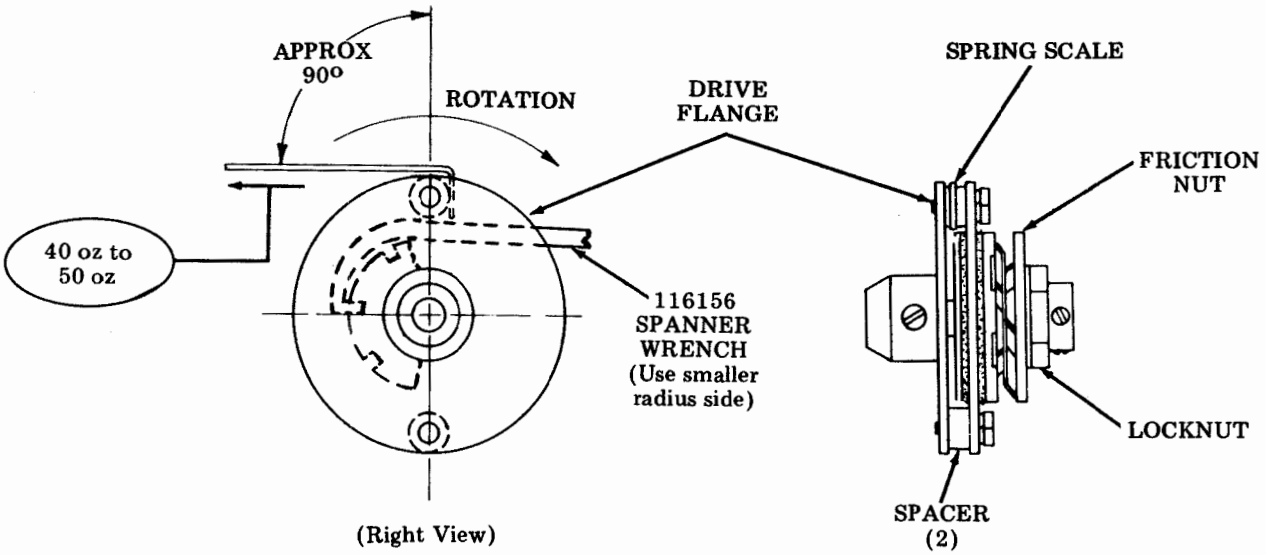

Sensing Arm (40PWU101 Late Design and 40PWU102)

Requirement
With an empty paper spool installed in the winder and the stop lever engaging its stop post, there should be approximately
1/8 inch gap
between closest paper spool rod and sensing arm extension post.

To Adjust
With setscrew associated with sensing arm friction tight, position arm to meet requirement. Tighten setscrew.

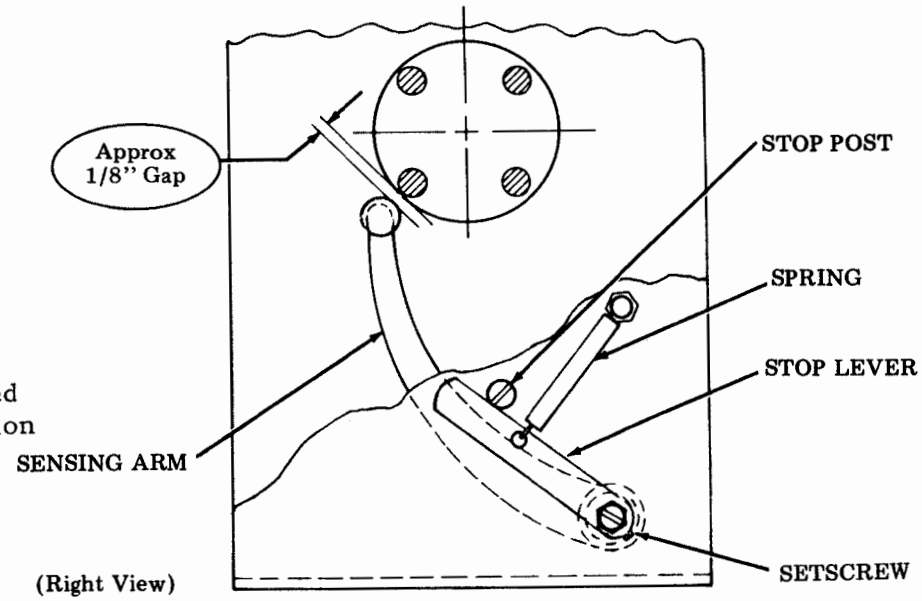

E. ADJUSTMENTS AND LUBRICATION (Cont)

2. PAPER WINDER (Cont)

Mercury Switch (40PWU101 Late Design and 40PWU102)

Requirement
The mercury switch should be activated to the ON position at a
Min 2-3/4 inch--Max 3 inch roll diameter.

DANGER: ADJUSTMENT TO BE MADE WITH UNIT IN THE OFF CONDITION.

To Adjust
With mercury switch friction tight and sensing arm rotated to obtain a 2-3/4 inch to 3 inch roll diameter, position switch to a point of just making contact. Tighten screw and recheck requirement.

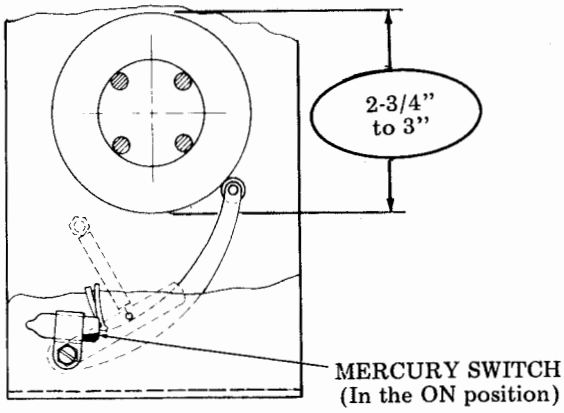

(Left View)

Low Clutch Torque (40PWU101 Late Design)

Requirement (Without Paper Spool)
With unit in the ON position, sensing arm in upper position, and spring scale hook applied over the spacer on the clutch, it should require
Min 7-1/2 ounces--Max 9-1/2 ounces
to allow the clutch to rotate.

NOTE: Apply greater spring tension than required, then relax tension to obtain values of adjustment.

DANGER: ADJUSTMENT TO BE MADE WITH UNIT DISCONNECTED FROM AC LINE VOLTAGE.

To Adjust
Loosen slide clamp locking screw friction tight. Position resistor slide clamp to obtain requirement. Tighten clamp screw. (To prevent damage to resistor, do not overtighten clamp.) Recheck requirement.

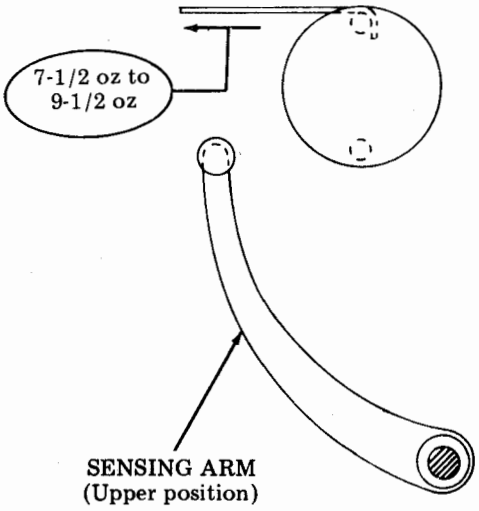

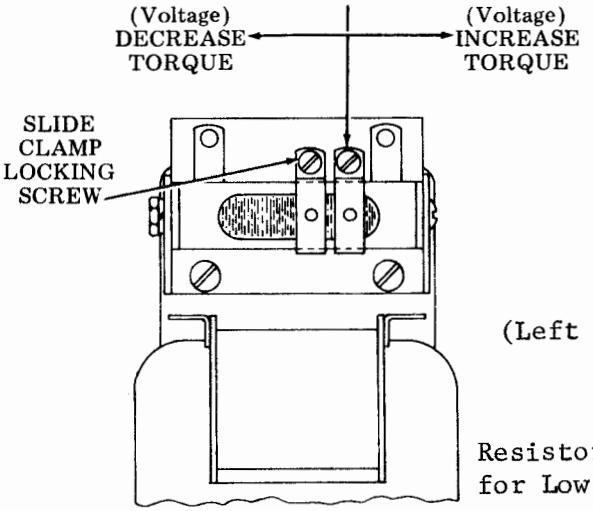

(Left View)

Resistor Assembly for Low Torque

High Clutch Torque (40PWU101 Late Design)

Requirement (Without Paper Spool)
With unit in the ON position, sensing arm held down, and spring scale hook applied over the spacer on the clutch, it should require
Min 15 ounces--Max 20 ounces
to allow clutch to rotate.

NOTE: Apply greater spring tension than required, then relax tension to obtain values of adjustment.

DANGER: ADJUSTMENT TO BE MADE WITH UNIT DISCONNECTED FROM AC LINE VOLTAGE.

To Adjust
Loosen slide clamp locking screw friction tight, position resistor slide clamp to obtain requirement. Tighten clamp screw. (To prevent damage to resistor, do not overtighten clamp.) Recheck requirement.

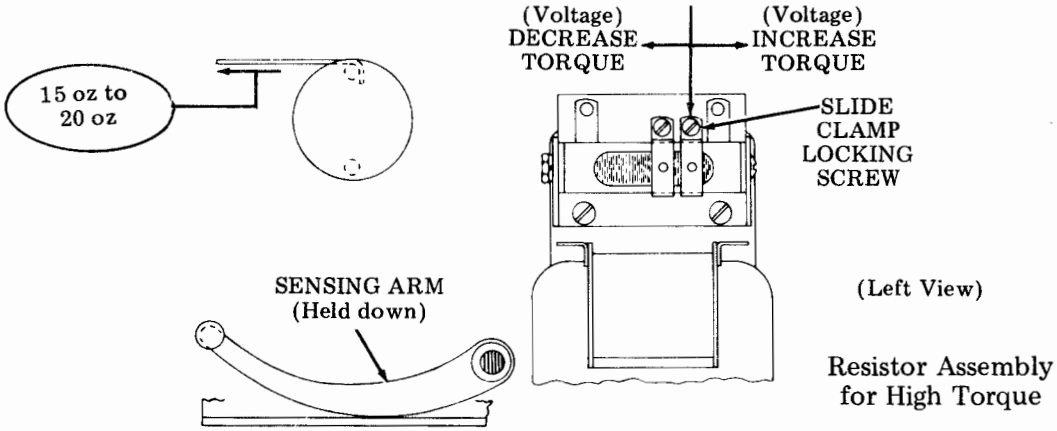

Lateral Winder Position (40PWU102)

Requirement
The paper spool flange must align with spent paper exiting from printer, and the paper should be flat on cabinet top when being wound.

To Adjust
Loosen the four winder assembly mounting screws. Position the winder left or right to meet requirement.

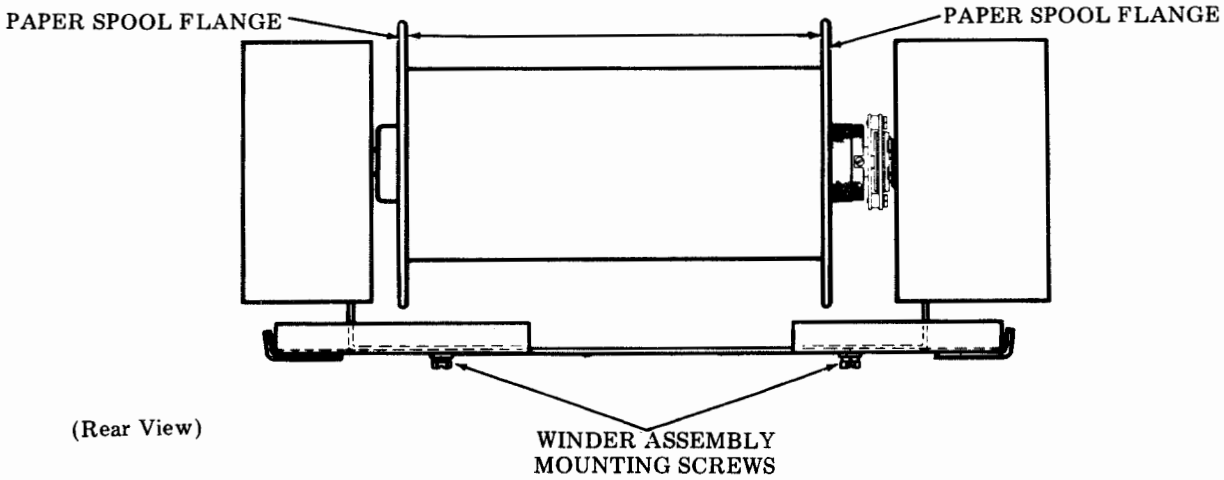

E. ADJUSTMENTS AND LUBRICATION (Cont)

2. PAPER WINDER (Cont)

Clutch Torque (40PWU102)

Requirement (Preliminary)
With motor side of the clutch in a locked position (use spanner wrench on friction nut) and spring scale hook applied over one of the spacers on the clutch, it should require
Min 40 ounces--Max 50 ounces
to move drive flange.

NOTE: Take up play in direction of pull before reading scale.

To Adjust
Loosen locknut. Rotate friction nut in or out to meet requirement. Tighten locknut.

Requirement (Final)
After installing the clutch on motor shaft, and operating unit for a period of time, clutch torque should measure
Min 25 ounces.
If below 25 ounces, readjust clutch.

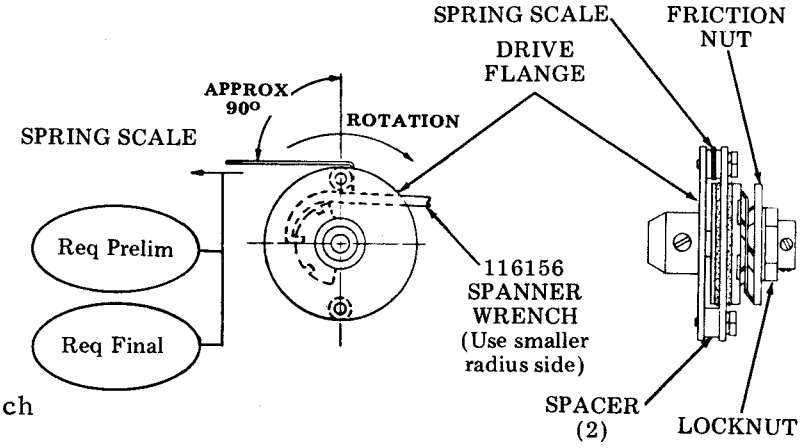

(Right View)

Low Motor Torque (40PWU102)

Requirement
With unit in the ON position, sensing arm in upper position, and spring scale hook applied into the hole of spool flange, it should require
Min 3 ounces--Max 4 ounces
to allow the clutch to rotate.

NOTE: Apply greater spring tension than required, then relax tension to obtain values of adjustment.

DANGER: ADJUSTMENT TO BE MADE WITH UNIT DISCONNECTED FROM AC LINE VOLTAGE.

To Adjust
Loosen slide clamp locking screw friction tight. Position resistor slide clamp to obtain requirement. Tighten clamp screw. (To prevent damage to resistor, do not overtighten clamp.) Recheck requirement.

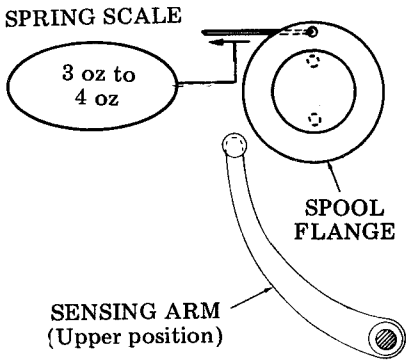

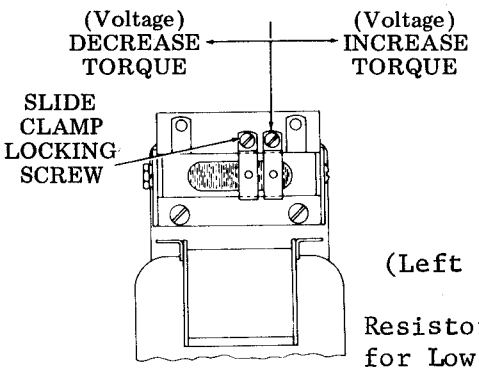

(Left View)

Resistor Assembly for Low Torque

High Motor Torque (40PWU102)

Requirement
With unit in the ON position, sensing arm held down, and spring scale hook applied into the hole of spool flange, it should require
Min 6 ounces--Max 8 ounces
to allow clutch to rotate.

NOTE: Apply greater spring tension than required, then relax tension to obtain values of adjustment.

DANGER: ADJUSTMENT TO BE MADE WITH UNIT DISCONNECTED FROM AC LINE VOLTAGE.

To Adjust
Loosen slide clamp locking screw friction tight. Position resistor slide clamp to obtain requirement. Tighten clamp screw. (To prevent damage to resistor, do not overtighten clamp.) Recheck requirement.

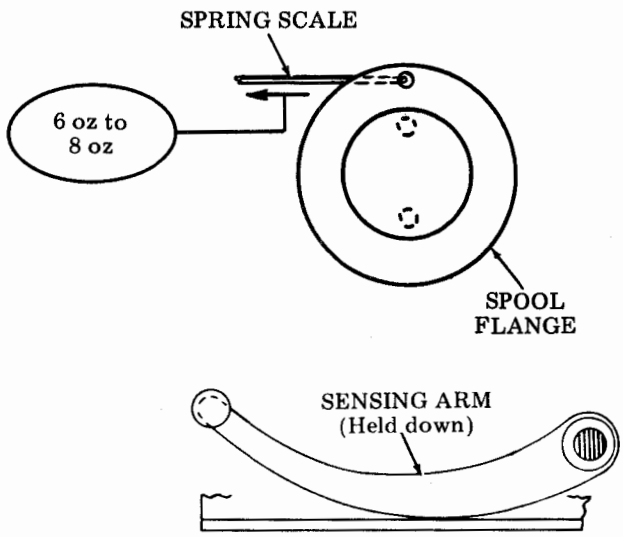

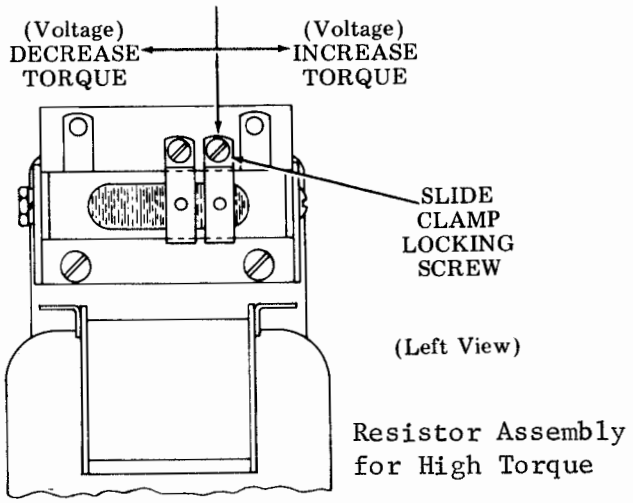

Resistor Assembly for High Torque

Lubrication

NOTE: Lubrication interval is 2000 hours or 1 year, whichever comes first.

The following symbols are used to indicate the kind and quantity of lubricant to be used in a specific area:

SYMBOL	MEANING
02	Apply one drop of KS7470 oil.
015	Apply 15 drops of KS7470 oil.
SAT	Saturate.
D	Dry (no lubrication required).

The paper winder motor cover must be removed to provide access to lubrication points. See adjacent illustration.

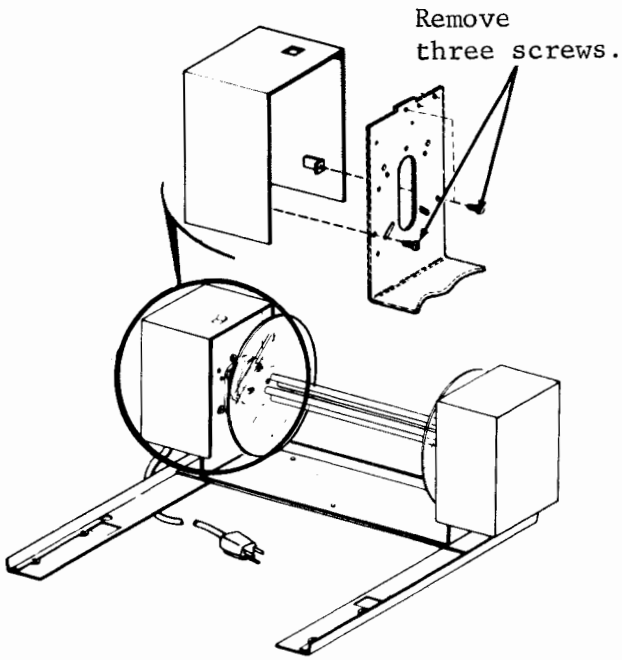

E. ADJUSTMENTS AND LUBRICATION (Cont)

2. PAPER WINDER (Cont)

Motor Assembly (40PWU101 Early Design)

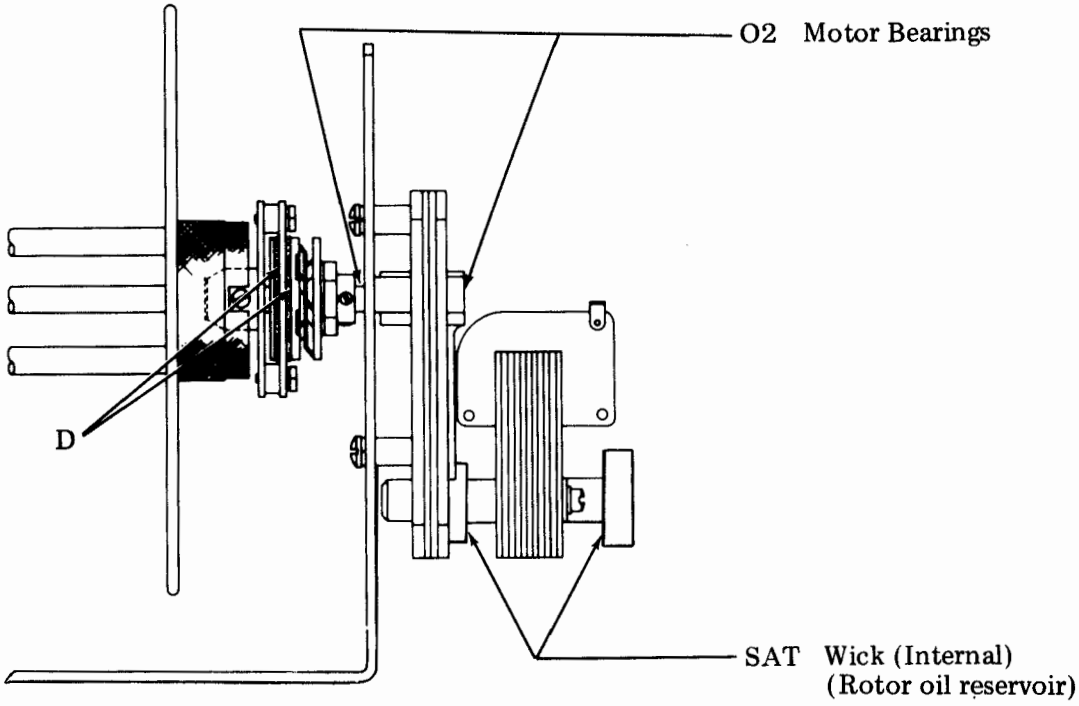

Motor Assembly (40PWU101 Late Design and 40PWU102)

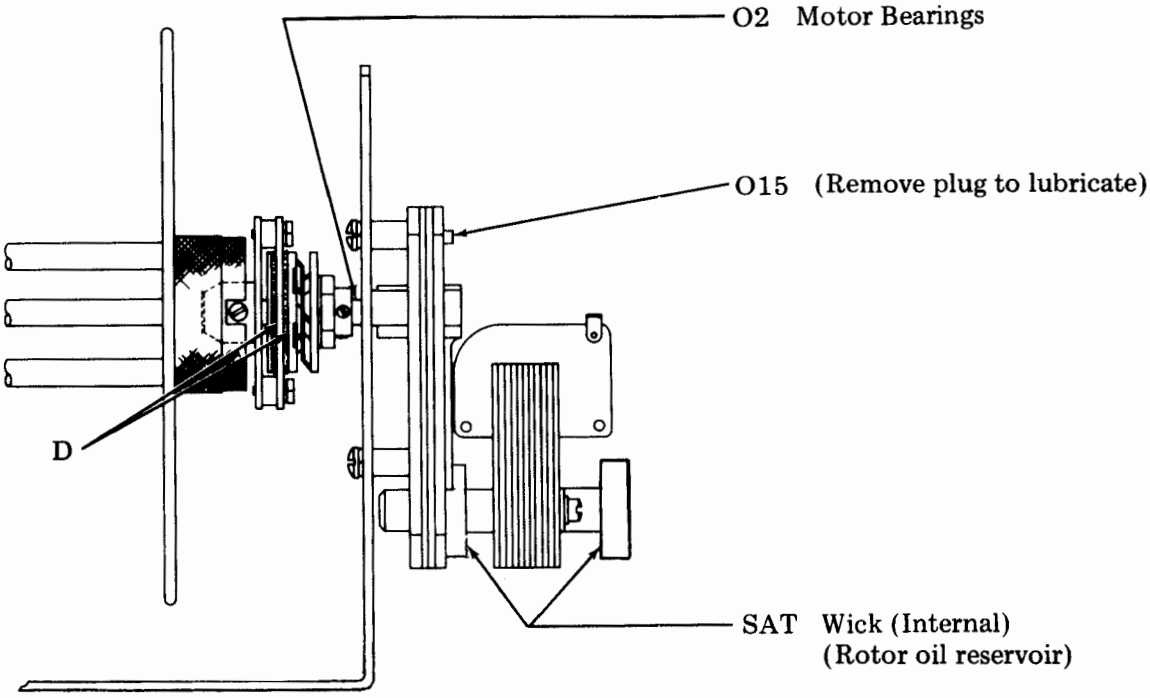

F. DISASSEMBLY, REASSEMBLY, AND PARTS

1. GENERAL

This section provides disassembly, reassembly, and parts information for Model 40 cabinets, paper winder and facilities.

Included in this section are exploded assembly and disassembly views detailing individual part numbers. A numerical listing of parts referenced to page numbers of the exploded views is listed at the rear of this section.

When removing a subassembly or part, follow the related illustration carefully. Do not force or pry parts to provide clearance for removal.

Refer to A. 2. TOOLS AND TEST EQUIPMENT for a listing of tools required for disassembly or reassembly.

After disassembly and reassembly of a subassembly or component is completed, associated adjustments should be checked and relubrication (if applicable) performed, see E. ADJUSTMENTS AND LUBRICATION. After cable repairs, the conductors should be checked for continuity using the connector to connector wiring diagrams associated with the cable assembly illustrations. Use a VOM set to the R X 1 range.

It is recommended that ac input power cords be unplugged during all disassembly or reassembly activity.

F. DISASSEMBLY, REASSEMBLY, AND PARTS (Cont)

2. CABINETS, PAPER WINDERS, AND FACILITIES

Friction Feed Printer Cabinets

40CAB201/AA Printer Adjacent Cabinet (Includes internal interlock and printer cables):
40CAB201/AC RO Printer Cabinet (Includes internal interlock, printer, and opcon cables):

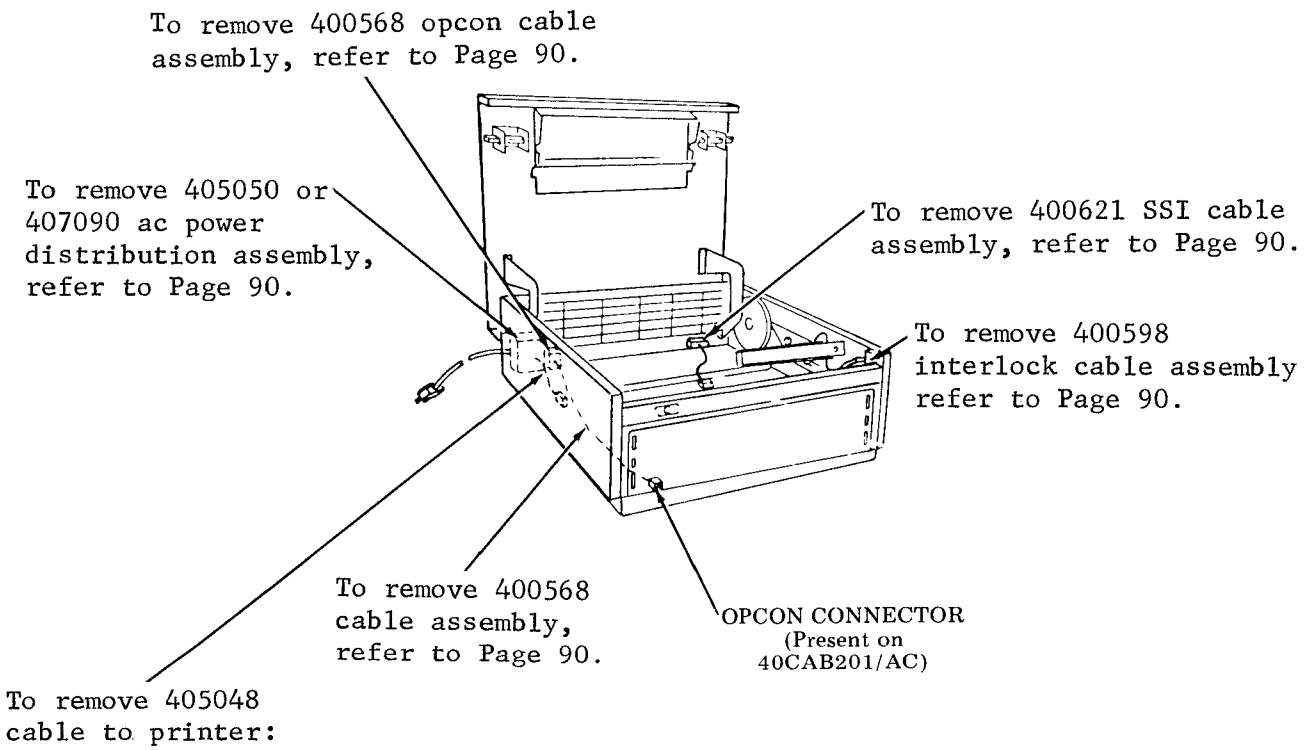

To remove 405048 cable to printer:

① Remove connector from cabinet cradle bracket.

② Unplug other end from 405050 ac distribution assembly.

40CAB251/AA Printer Under Monitor Cabinet

To remove 400621 SSI cable assembly, refer to Page 90.

To remove 341911 cable assembly:
1. Loosen cable clamps.
2. Remove connectors from cabinet.
3. Remove cable assembly.

To remove 405049 printer cable or 405051 monitor cable, refer to Page 91.

To remove 400598 interlock cable assembly, refer to Page 90.

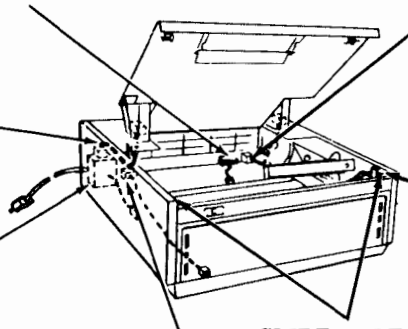

SLIDE RELEASE LATCHES

To remove 405050 or 407090 ac power distribution assembly, refer to Page 90.

To remove 400620 opcon cable assembly:
1. Remove 401150 connector from front of cabinet.
2. Remove two of each: 151637 screws, 93984 lockwashers and 125011 flat washers. Remove assembly.

To gain access to assemblies mentioned:
1. Open cabinet lid.
2. Slide frame with printer forward until it stops.
3. Remove printer.

Depress slide release latches to push frame back into cabinet.

Logic Cabinets

40CAB201/AB Logic Adjacent Cabinet

To remove 405050 or 407090 ac power distribution assembly, refer to Page 90.

408050 VENTILATION ASSEMBLY

To remove 402173 monitor cable:
1. Remove 121243 cable clamp.
2. Remove connector from rear of cabinet.

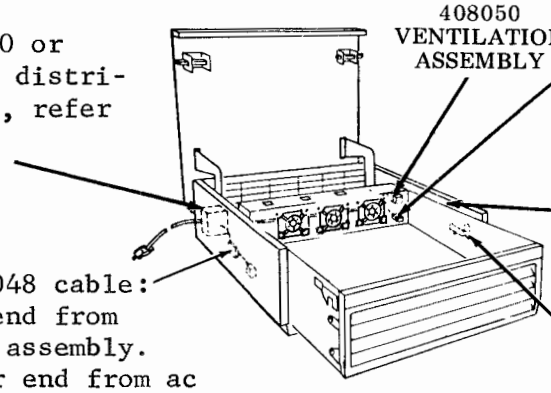

To remove 408048 cable:
1. Unplug one end from ventilation assembly.
2. Unplug other end from ac distribution and remove cable.

To remove electronic logic package:
1. Lift and slide slightly forward.
2. Disconnect monitor and ac cables.
3. Slide logic package forward until it stops.
4. Insert screwdriver under latch and lift up on latch.
5. Slide logic package forward and out.

To remove 408050 ventilation assembly:
1. Remove three 198670 screws.
2. Remove 3598 nut, 125015 flat washer, and 2191 lockwasher.

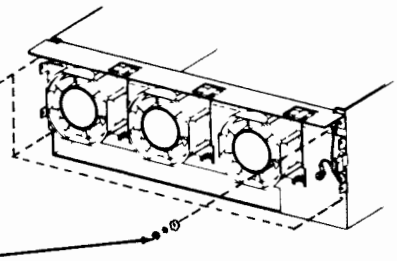

F. DISASSEMBLY, REASSEMBLY, AND PARTS (Cont)

2. CABINETS, PAPER WINDERS, AND FACILITIES (Cont)

40CAB251/AB Logic Under Monitor Cabinet
40CAB251/AC Monitor/Opcon Support
40CAB251/AE Logic Under Monitor

To remove 405051 monitor cable and 405047 fan cable (not used on 40CAB251/AC), refer to Page 91.

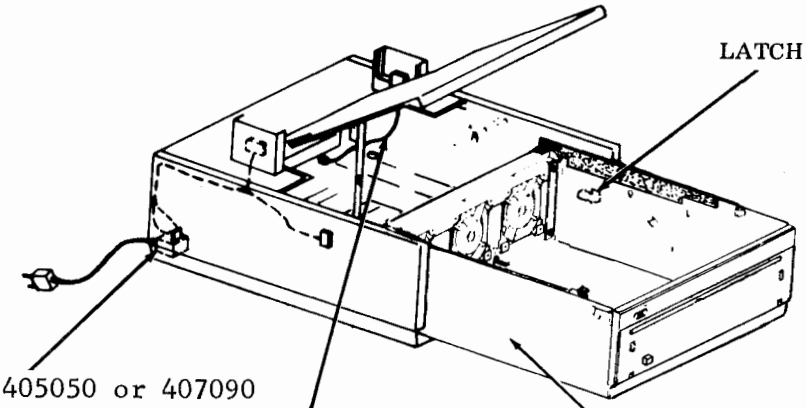

To remove 405050 or 407090 ac power distribution assembly, refer to Page 90.

To remove 341891 (used on 40CAB251/AB) or 406046 (used on 40CAB251/AE) monitor cables, refer to Page 91.

40CAB251/AB only -- to remove electronic logic package and fan assembly:

1. Lift and slide forward until logic package stops.
2. Disconnect fan and monitor cables on rear of logic package.
3. Loosen 341819 shoulder screw from top of fan assembly frame.
4. Insert screwdriver under latch and slide logic package slightly forward.
5. Remove logic package.

To remove 408050 assembly, refer to Page 83.

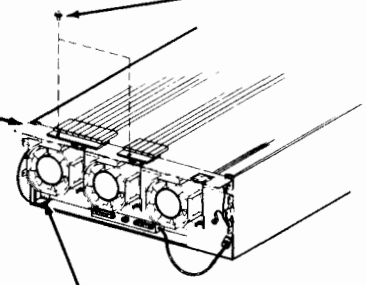

341891
MONITOR CABLE

Tractor Feed Printer Cabinets

40CAB351/AA and 40CAB353/AA Printer Adjacent Cabinets
40CAB351/AB, 40CAB351/AC, and 40CAB353/AB RO Printer Cabinets

To replace 333588 lamp in 335123 switch:
① Remove 403800 button.
Replace lamp.

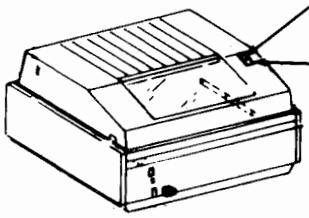

To remove 335123 switches:
① Remove switch button.
② Remove nut from top of switch.
③ Unsolder leads.
④ Remove switch.

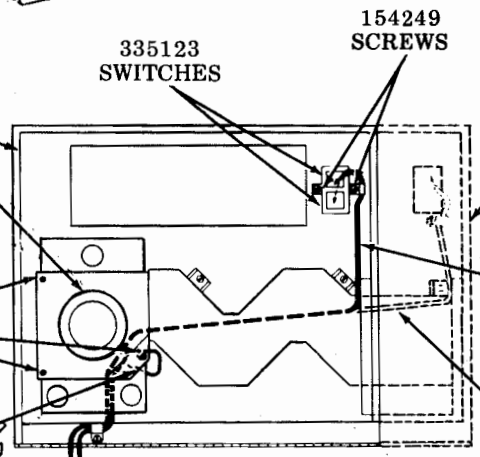

To remove 403785 fan:
① Disconnect ac terminals from fan.
② Remove three 150978 screws.
③ Remove fan assembly.

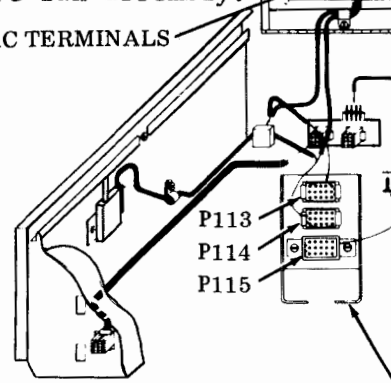

40CAB351/AA and AB and 40CAB353/AA only -- to remove 407075 SSI assembly:
① Disconnect SSI cable.
② Remove opcon connector from bracket, if present.
③ Remove two 151631 screws and two 107116 lockwashers from under cabinet.

Ref 403830 SSI CABLE ASSEMBLY

Ref 403795 BRACKET

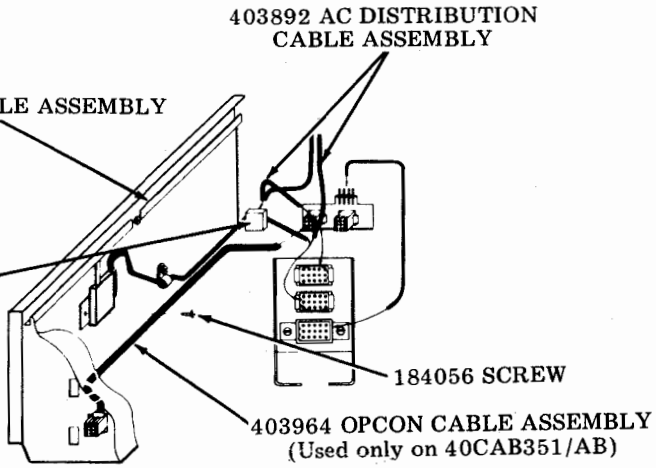

All 40CAB351 and 353 cabinets -- to remove 405050 or 407090 ac power distribution assembly, refer to Page 90.

F. DISASSEMBLY, REASSEMBLY, AND PARTS (Cont)

2. CABINETS, PAPER WINDERS, AND FACILITIES (Cont)

40CAB351/AC and 40CAB353/AB RO Printer Cabinets

To remove 407077 EIA signal input assembly:

1. Disconnect EIA plug from circuit card assembly.
2. Remove two 151631 screws and two 107116 lockwashers from bottom of cabinet.
3. Remove assembly.

To remove 407076 capacitor assembly:

1. Remove terminals of 407302 power cable from 341691 ac power connector. See wiring below.
2. Disconnect 403445 and 407302 cables from circuit card assemblies.
3. Remove two 151631 screws and two 107116 lockwashers from bottom of cabinet.
4. Remove assembly.

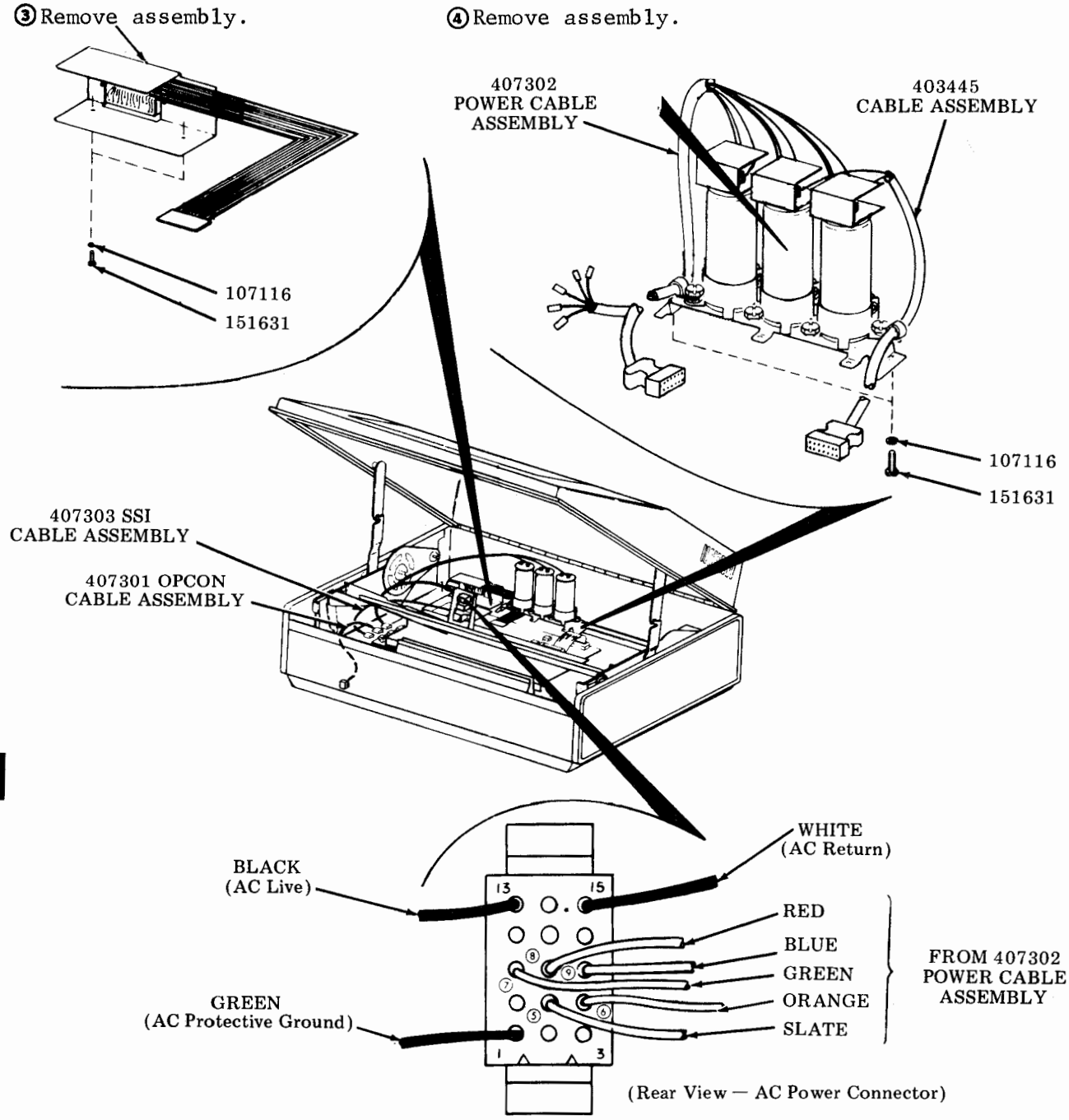

40CAB351/AE and 40CAB353/AD Printer Cabinets

To remove 406169 EIA assembly:

① Disconnect EIA plug from circuit card assembly.
② Remove two 151631 screws and two 107116 lockwashers from bottom of cabinet.
③ Remove assembly.

To remove 406189 capacitor assembly:

① Remove terminals of 406175 power cable from 341691 ac power connector. See wiring below.
② Disconnect cables from circuit card assemblies.
③ Remove two 151631 screws and two 107116 lockwashers from bottom of cabinet.
④ Remove assembly.

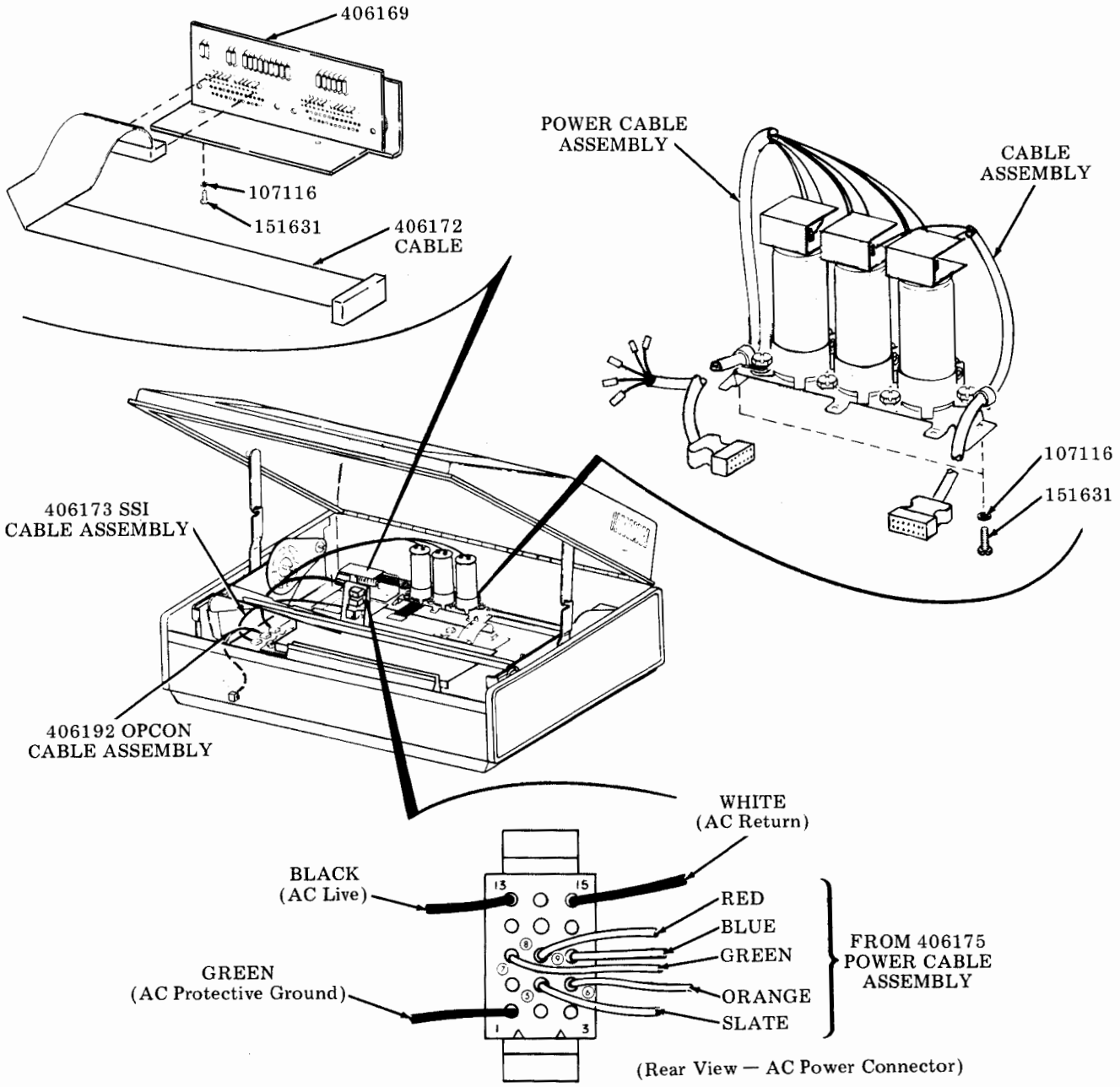

F. DISASSEMBLY, REASSEMBLY, AND PARTS (Cont)

2. CABINETS, PAPER WINDERS, AND FACILITIES (Cont)

Friction Feed Printer Cabinets -- Noise Reducing

40CAB371/AA Printer Adjacent Cabinet
40CAB371/AB RO Printer Cabinet

To remove 405050 or 407090 ac distribution assembly, refer to Page 90.

To remove 403785 fan:
① Disconnect terminals from fan.
② Remove two 152426 nuts.
③ Remove fan.

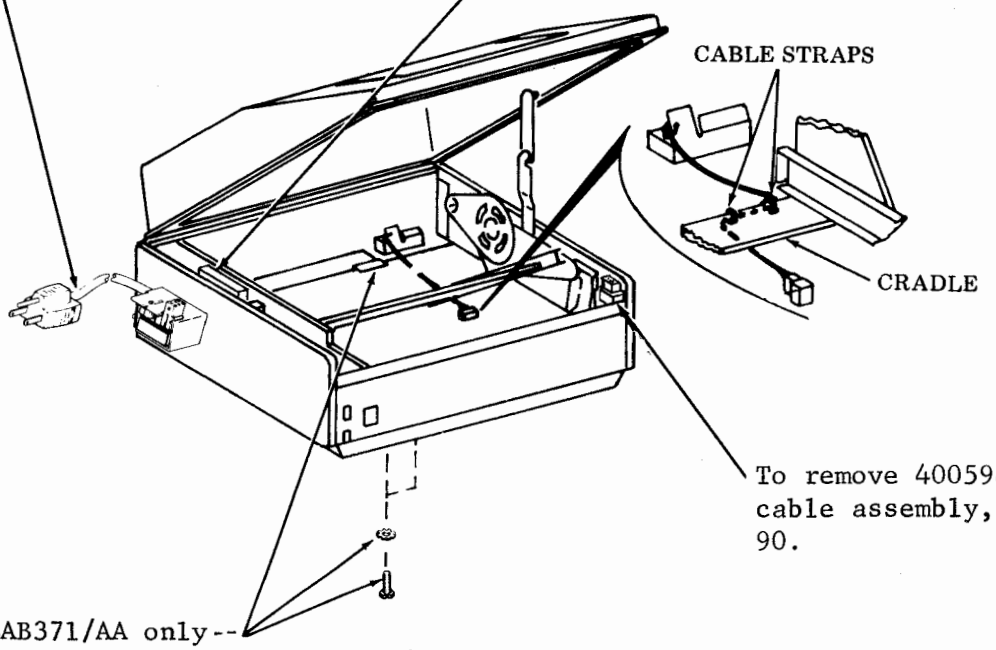

To remove 400598 interlock cable assembly, refer to Page 90.

40CAB371/AA only--
to remove 407122 SSI cable w/bracket:

① Remove two 151631 screws and two 107116 starwashers from bottom of cabinet.
② Cut cable straps holding cable to the cradle.
③ Remove 407122 SSI cable w/bracket.

40CAB371/AB RO Printer Cabinet

To remove 407077 EIA signal input assembly:

1. Disconnect EIA plug from circuit card assembly.
2. Remove two 151631 screws and two 107116 lockwashers from bottom of cabinet.
3. Remove assembly.

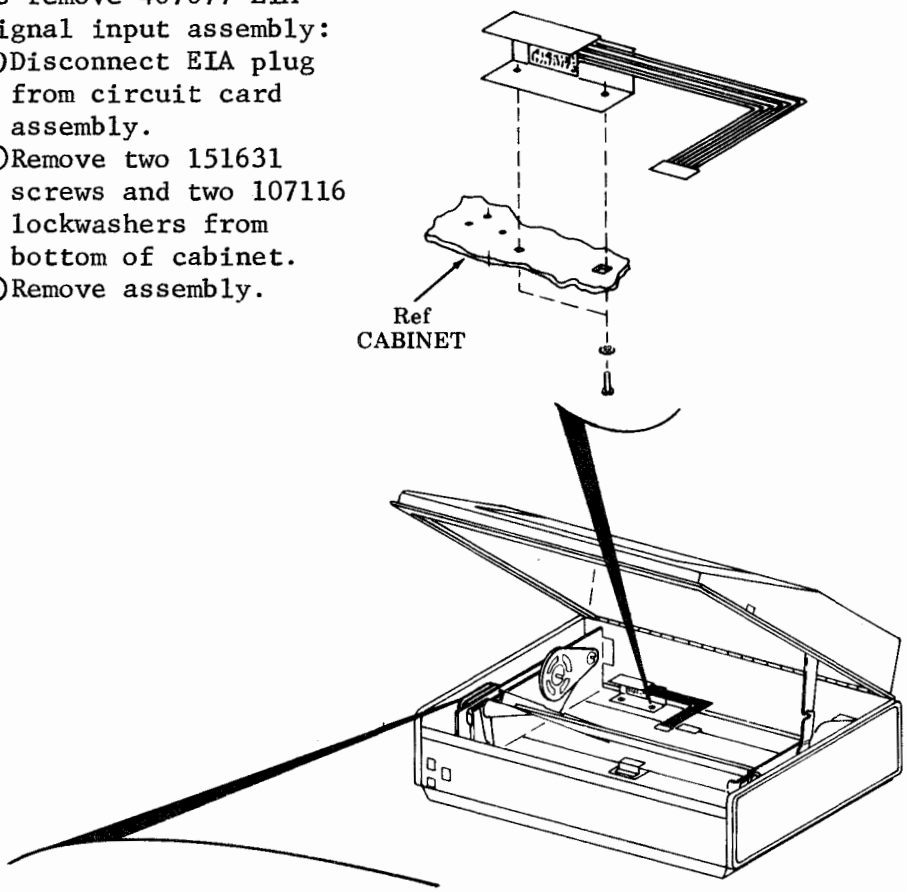

To remove 407124 power supply:

1. Disconnect two connectors from circuit cards.
2. In order to gain clearance to remove the 407124 power supply, two mounting screws on the Z strip are to be loosened and Z strip pivoted upwards.
3. Remove three 151631 screws and three 107116 lockwashers.
4. Remove power supply.

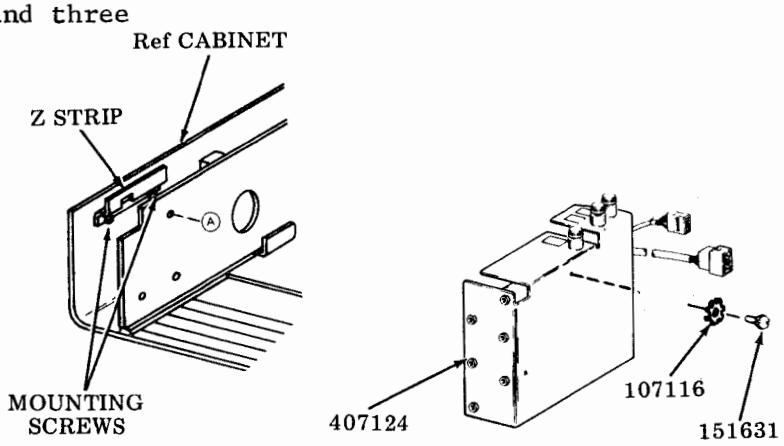

F. DISASSEMBLY, REASSEMBLY, AND PARTS (Cont)

2. CABINETS, PAPER WINDERS, AND FACILITIES (Cont)

Cabinet Subassemblies (Table Top)

AC Distribution and Cable Assemblies

To remove 400568 opcon cable assembly (includes 400577 bracket and opcon cable):

1. Remove 401150 connector from front of cabinet.
2. Remove six 400566 cable restraints.
3. Remove two of each: 151637 screws, 93984 lockwashers, and 125011 flat washers.
4. Remove assembly.

To remove 400621 SSI cable assembly:

1. Remove three 181241 screws.
2. Remove 400621 assembly.

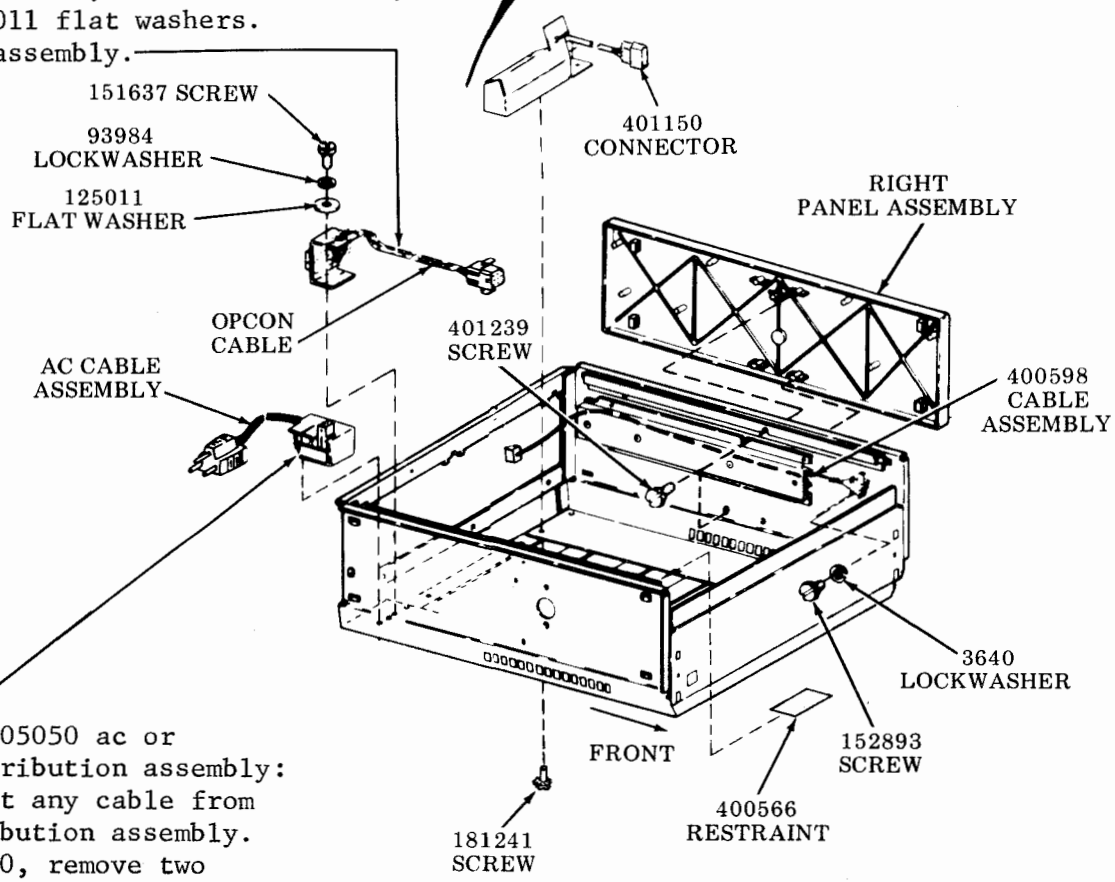

To remove 405050 ac or 407090 distribution assembly:

1. Disconnect any cable from ac distribution assembly.
2. For 405050, remove two 408887 screws from bottom of cabinet. For 407090, remove two 2658 nuts from bottom of cabinet.
3. Remove assembly.

To remove 400598 interlock cable assembly:

1. Remove two 401239 screws.
2. Grasp center of side panel and gently pull outward to withdraw locating pin. While holding, pull toward front of the cabinet to remove.
3. Remove two 152893 screws and two 3640 lockwashers.
4. Remove assembly.

Fan and Monitor Power Cables, Monitor Signal Cables

To remove 405047 ac fan cable or 405049 printer cable:

①Unplug 405047 cable from ac distribution assembly and remove.

To remove 405049 ac printer cable:

①Remove connector from cabinet cradle bracket.

②Unplug other end from 405040 ac distribution assembly.

To remove 405051 ac monitor cable:

①Remove three terminals of 405051 cable from 405038 connector or connector of 405047 ac fan cable or connector of 405049 printer cable.

②Remove connector from support and remove cable.

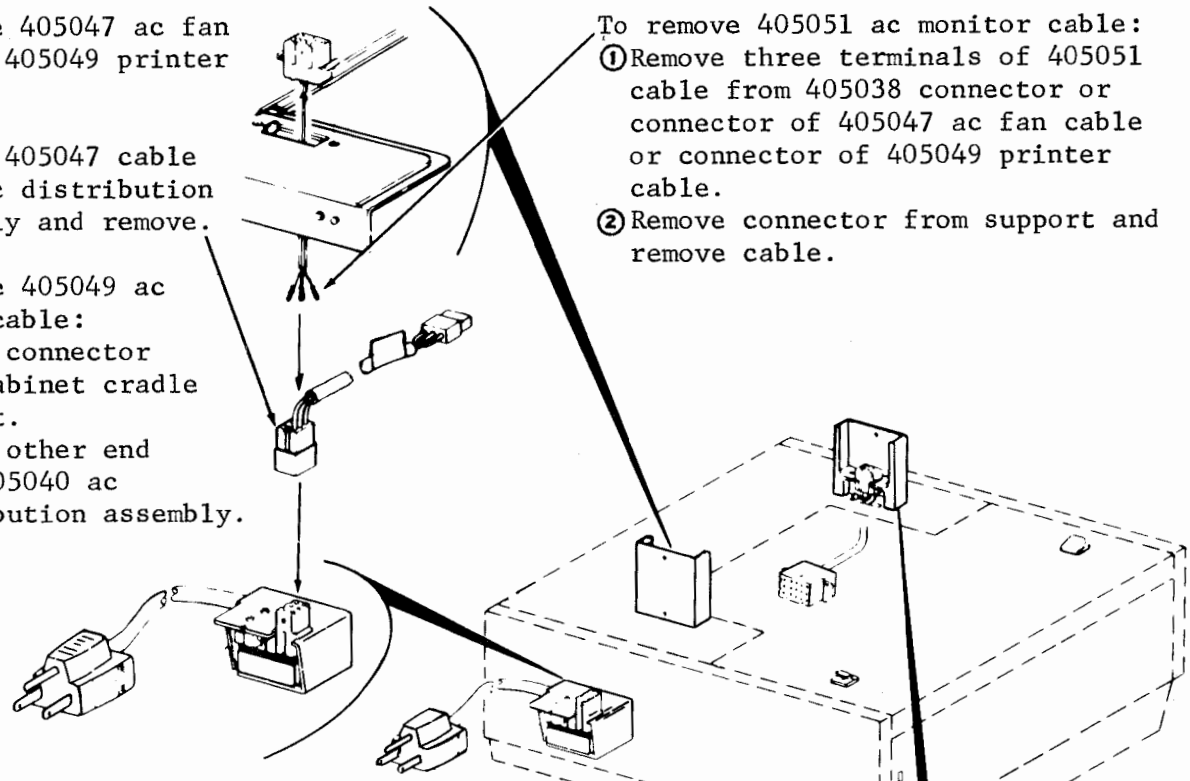

To remove 341891 or 406046 monitor cables:

①Loosen hardware and remove terminal ground of the monitor cable.

②341891 cable:

- Cut cable tie.
- Remove cable retainer plate from tabs on lower surface of cabinet top member.
- Remove connector from support and remove cable.

③406046 cable:

- Remove nut and cable clamp holding cable to lower surface of cabinet member.
- Remove connector from support and remove cable.

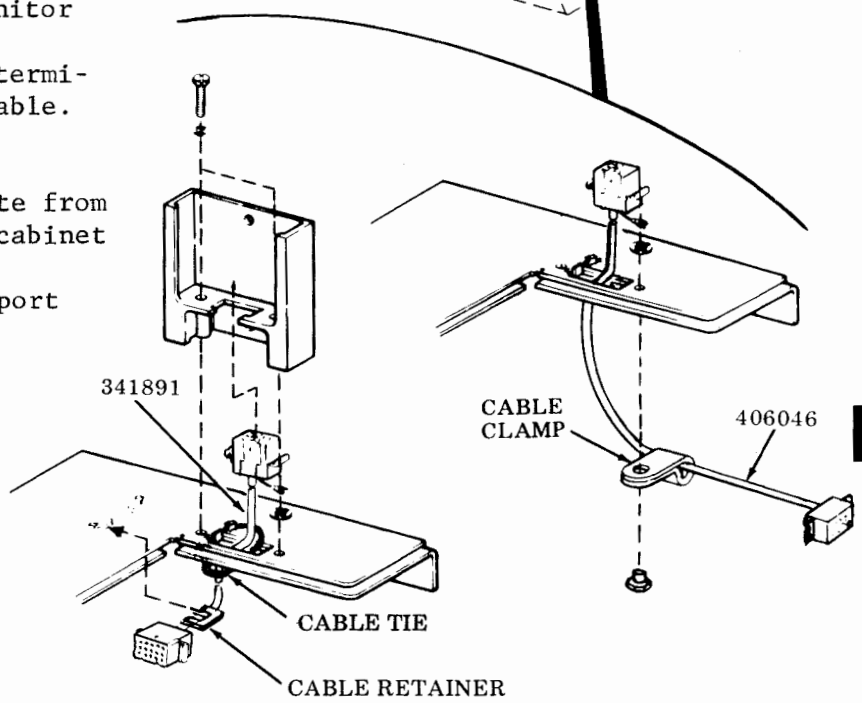

F. DISASSEMBLY, REASSEMBLY, AND PARTS (Cont)

2. CABINETS, PAPER WINDERS, AND FACILITIES (Cont)

Cabinet (Pedestal Type)

40CAB901/XX Cabinet (Pedestal Type)

To remove ventilation assembly and electronics package assembly:

Remove two 401225 screws with washers.

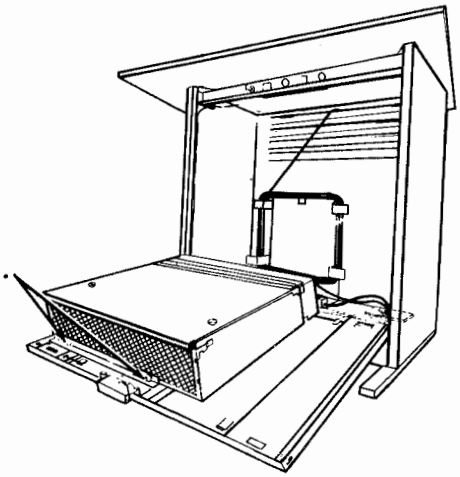

To remove 407285 ac distribution assembly (late design):

NOTE: New ac distribution assembly is equipped with 6 switched receptacles, and an ON-OFF switch mounted on the panel.

To remove 401665 ac distribution assembly (early design):

Remove two 401225 screws and 408052 ac switch assembly with hardware.

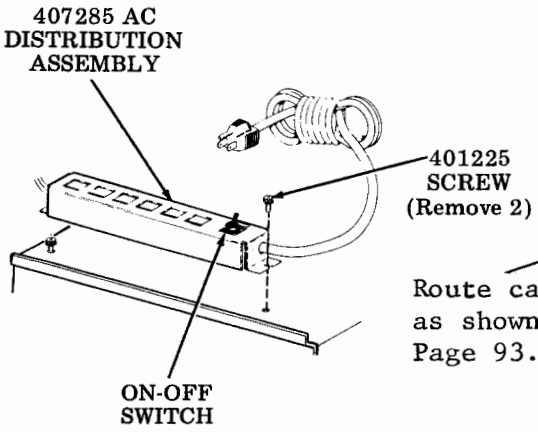

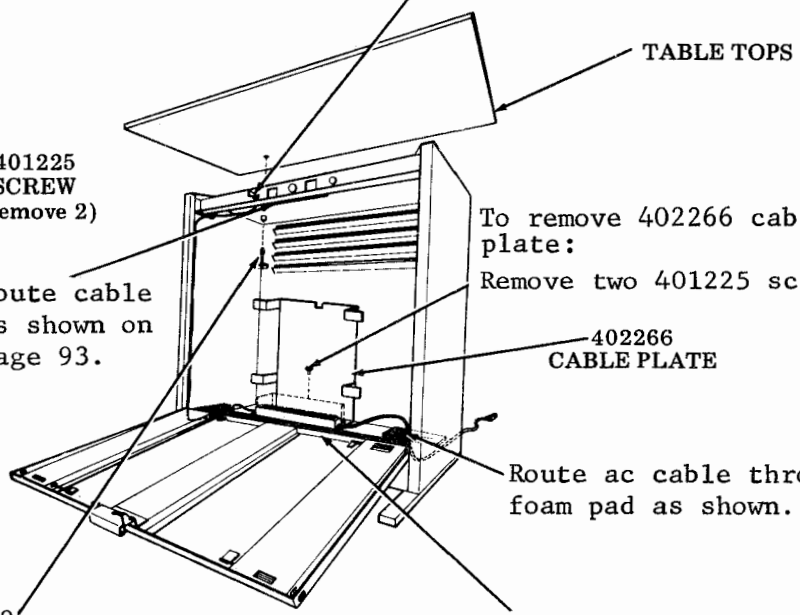

To remove table tops:

Remove four 2449 lockwashers and 162730 screws.

Cabinet (Pedestal-Type)

40CAB901/XX Cable Routing

①Disassemble switch mounting bracket. Do not remove switch.

②Install cable clip to top of pedestal.

③Install cable clip on louver at rear of pedestal.

④Reassemble switch mounting bracket.

⑤Route cable as shown.

⑥Dress cable, taking up slack as shown, and install the cable strap.

Cut Away Top View of the Pedestal

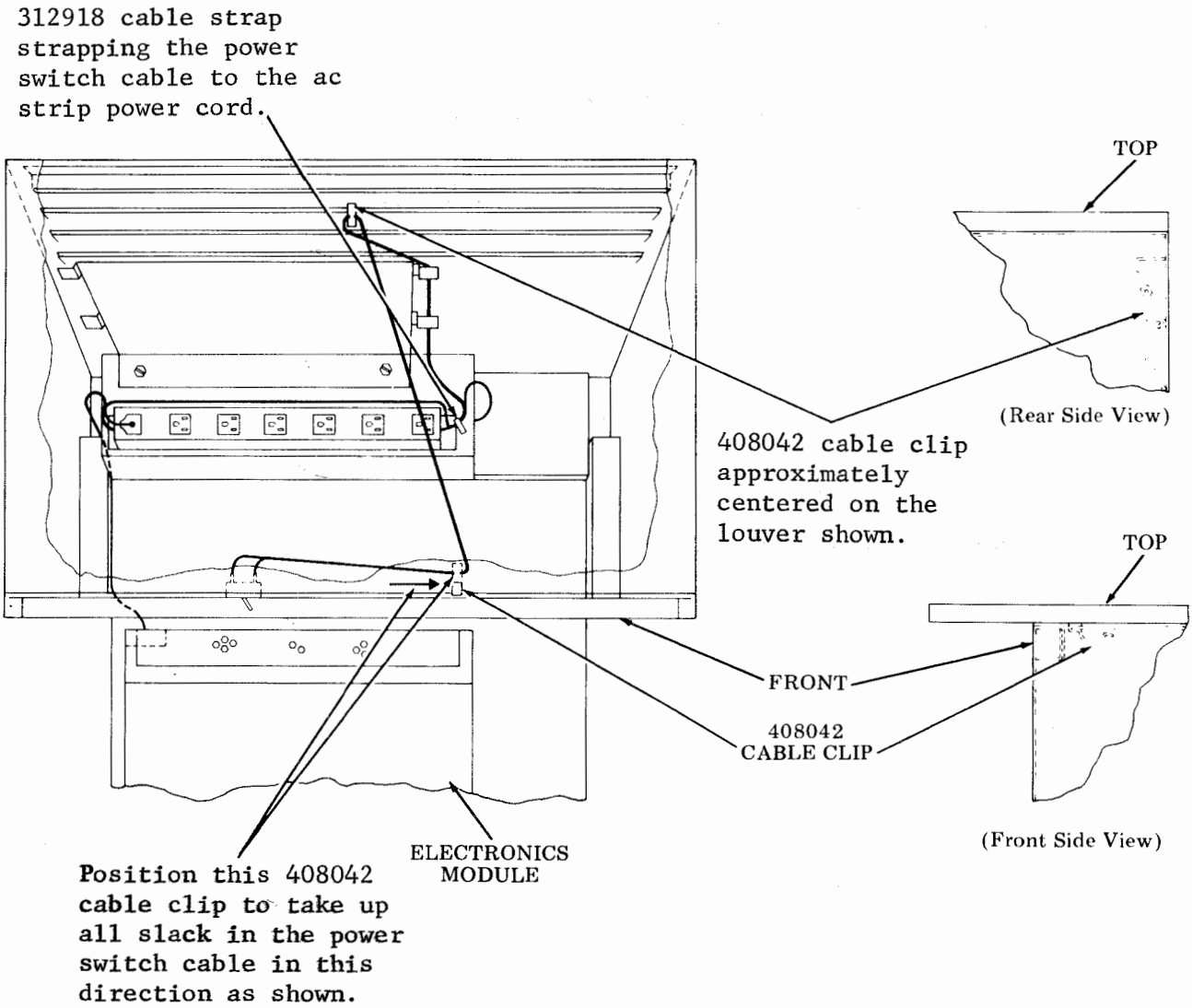

F. DISASSEMBLY, REASSEMBLY, AND PARTS (Cont)

2. CABINETS, PAPER WINDERS, AND FACILITIES (Cont)

40CAB902/XX

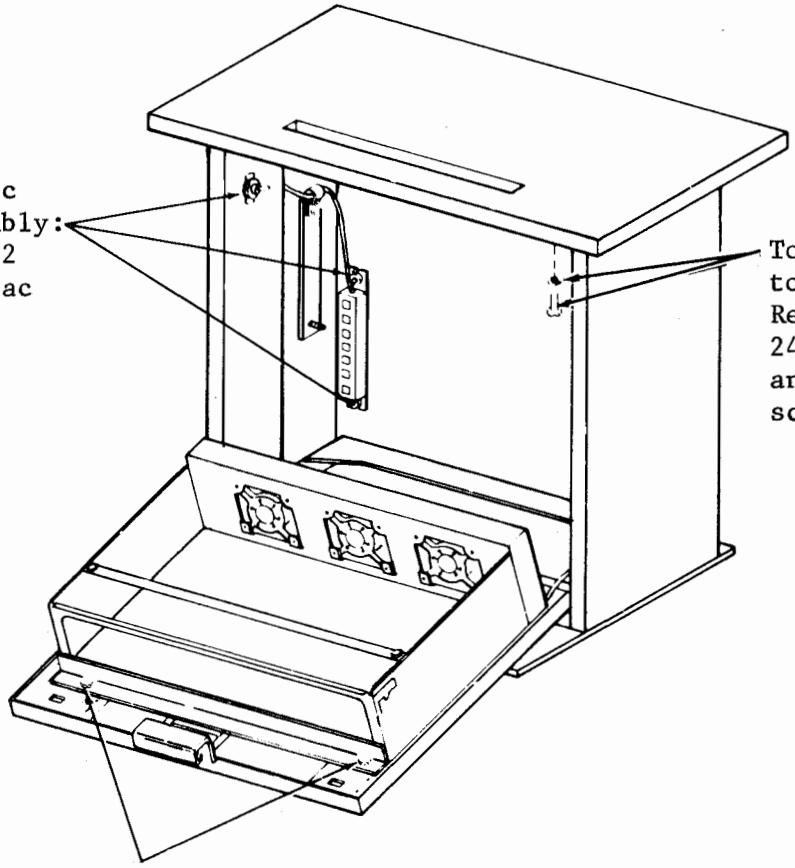

To remove 401665 ac distribution assembly:
① Remove two 401582 nuts and 408052 ac switch assembly w/hardware.
② Remove hardware and cable clamp.

To remove table tops:
Remove four 2449 lockwashers and four 162730 screws.

To remove ventilation assembly and electronics package assembly:
Remove two 401225 screws.

Cabinet (Pedestal Type) Subassemblies

40CAB901/XX and 40CAB902/XX

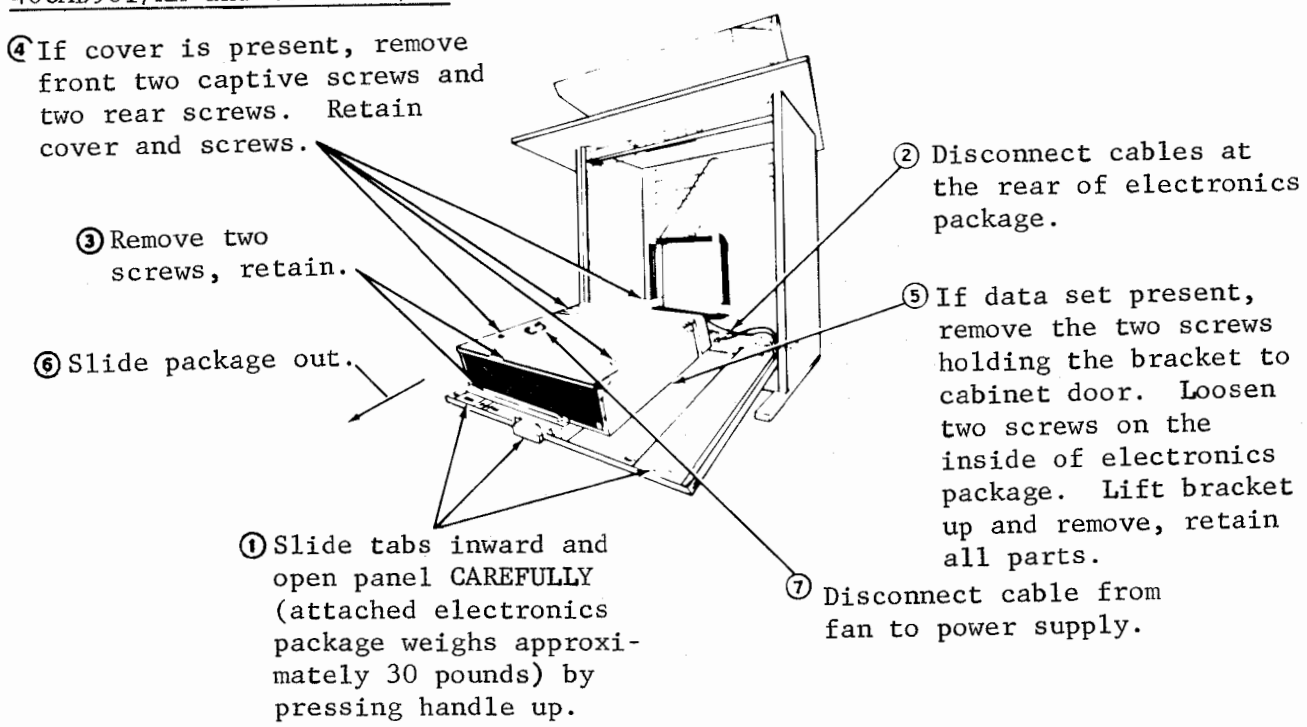

Ventilation Assembly Removal -- 40CAB901/XX

① Remove four 156740 screws, four 2191 lockwashers, and four 7002 flat washers. Remove 408030 fan guard assembly.

② Remove 3598 nut, 2191 lockwasher, 125015 flat washer, and three 198670 screws.

③ Loosen two 341819 shoulder screws and remove 408050 assembly.

NOTE: On ROP electronics package, remove two 198670 screws w/washers.

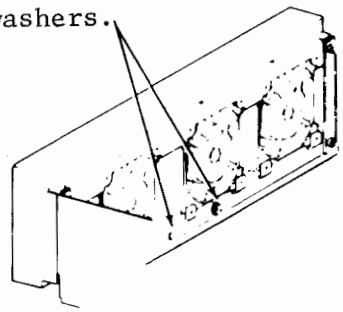

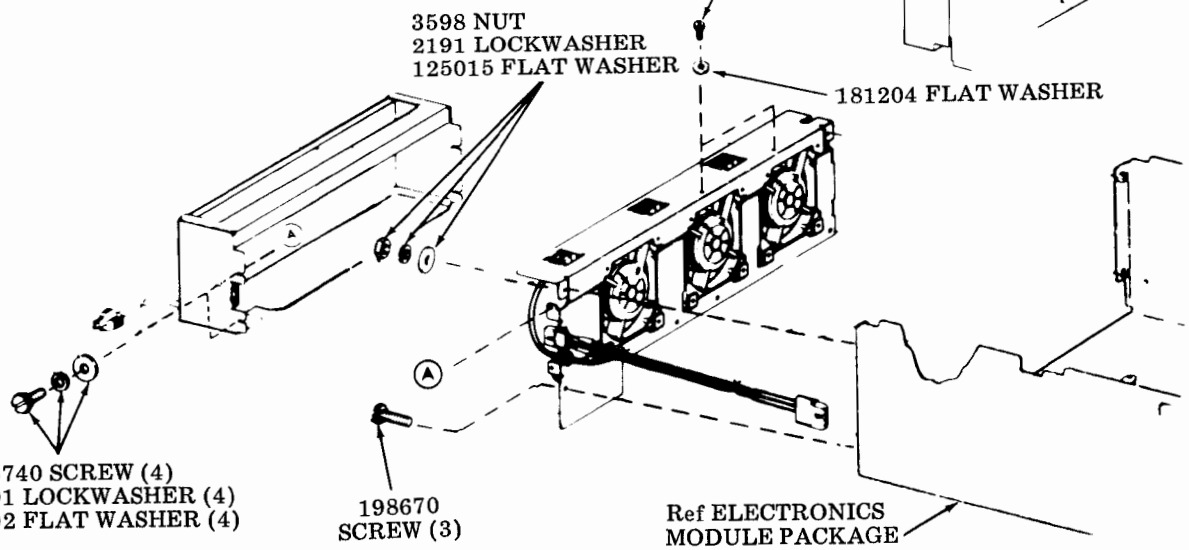

F. DISASSEMBLY, REASSEMBLY, AND PARTS (Cont)

2. CABINETS, PAPER WINDERS, AND FACILITIES (Cont)

Ventilation Assembly Removal -- 40CAB902/AB

1. Remove 3598 nut, 2191 lockwasher, 125015 flat washer, and three 198670 screws.
2. Remove guard.
3. Remove two 198670 screws holding mounting plate to ventilation assembly. Remove ventilation assembly.

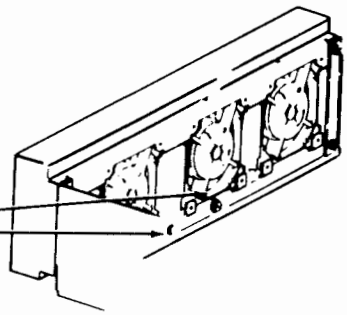

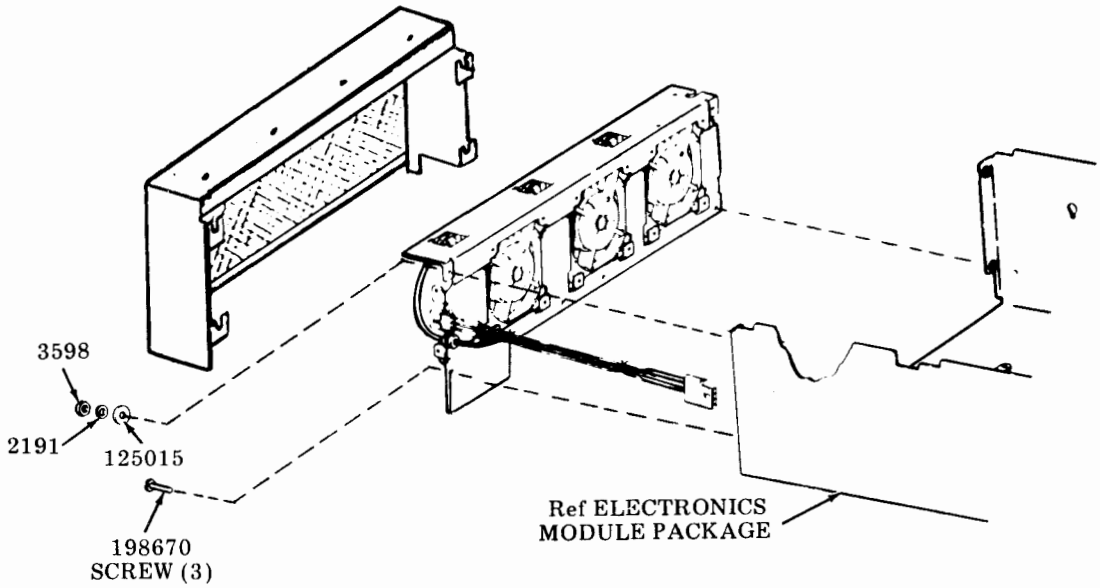

ROP Controller Interface and Power Supply Cable:

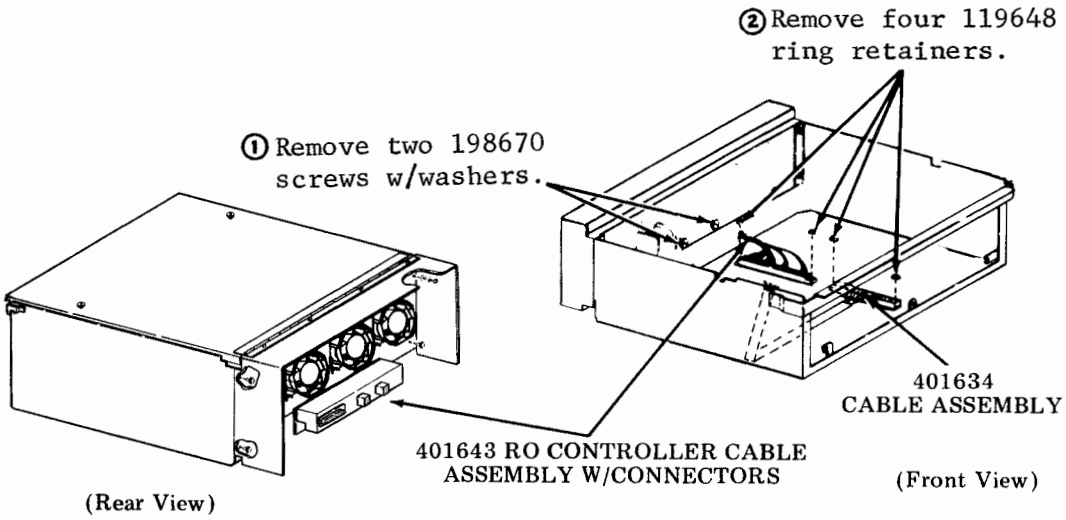

ROP Electronics Logic Package

40CAB302/ZZ Forms Access Cabinet

To remove access doors:

Remove respective hinge mounting screws and their respective ground straps from the cabinet.

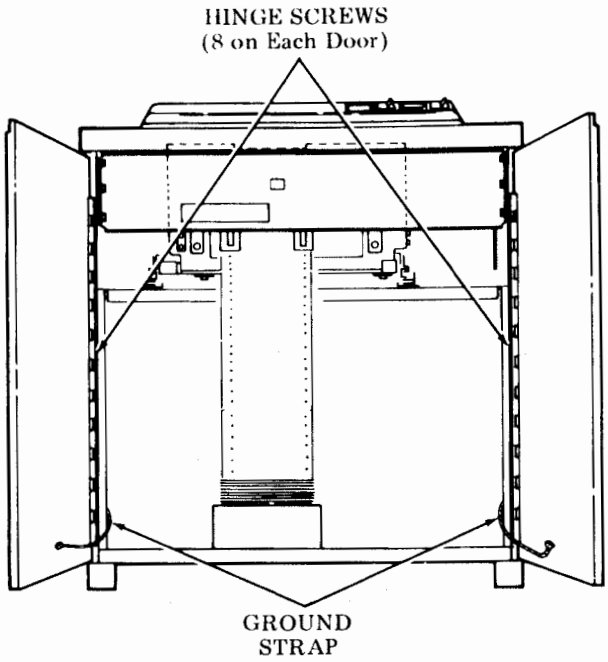

40CAB302/ZZ Forms Access Cabinet

To remove top cover from cabinet:

①Remove two screws holding the switch cover.

②Remove cable clamp screw.

③Disconnect cable assembly terminals from respective component terminals on forms chute.

④Remove six top cover hinge mounting screws.

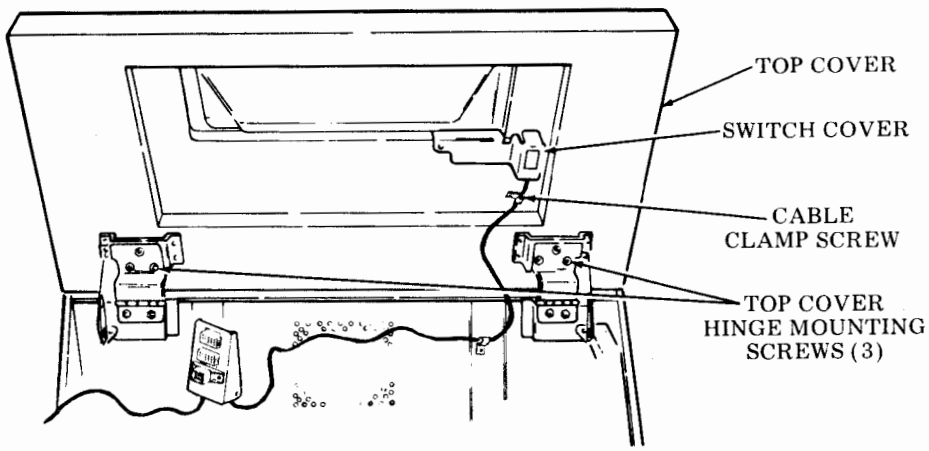

F. DISASSEMBLY, REASSEMBLY, AND PARTS (Cont)

2. CABINETS, PAPER WINDERS, AND FACILITIES (Cont)

40CAB302/ZZ Forms Access Cabinet

To remove 406424 cable assembly with Interlock switches:

1. Remove all screws securing cable clamps from each branch of cable assembly.
2. Disconnect P200 connector from ac distribution box.
3. Remove two screws mounting Interlock switches to cabinet.

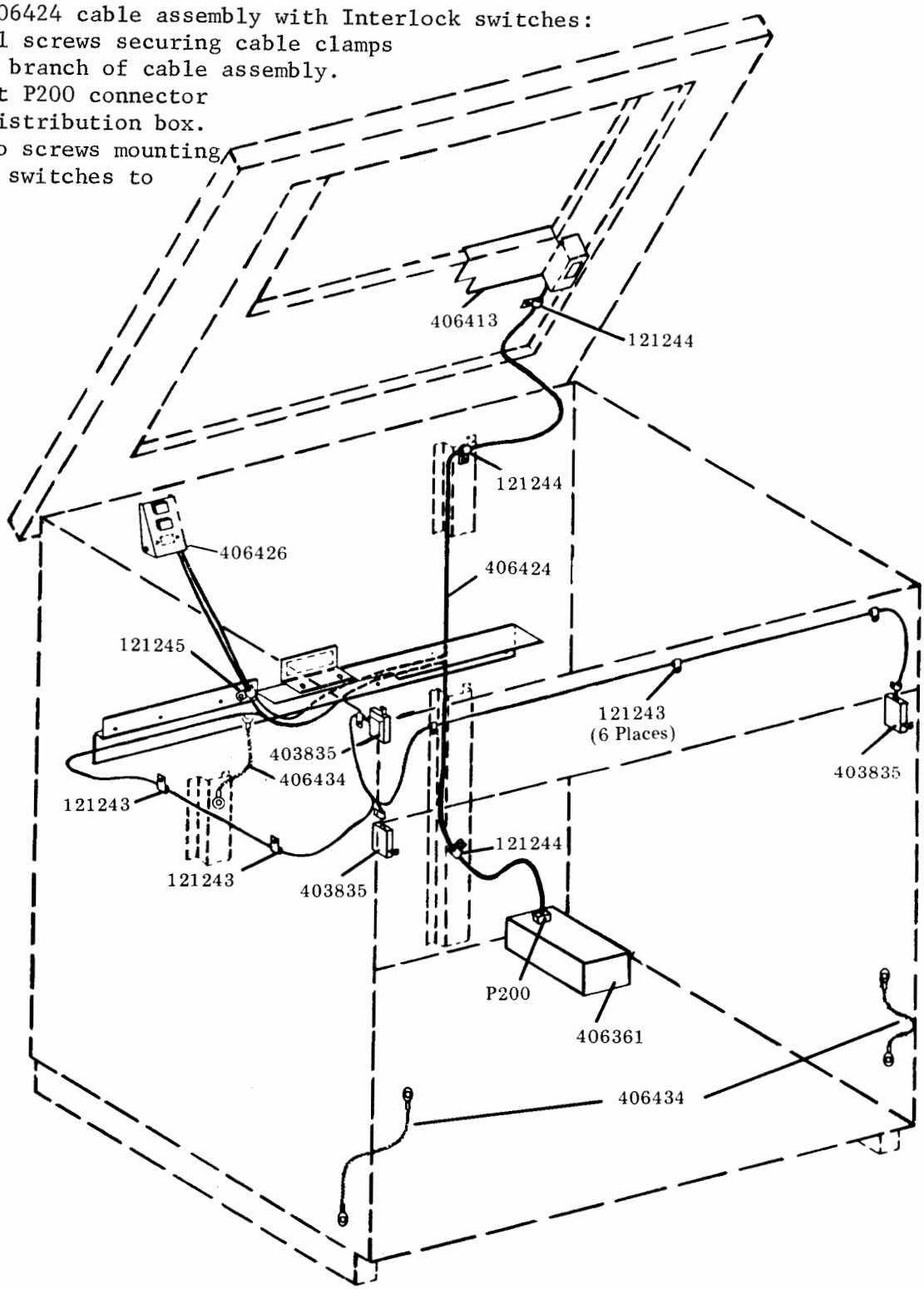

NOTE: To reinstall the 406424 cable assembly, reverse the above procedure.

40CAB302/ZZ Forms Access Cabinet

The 40CAB302/ZZ cabinets are provided with three security features that customers may desire for their installation: 1. Holes for securing cabinet to the floor, 2. an entry security lock knockout in the left front access door, and 3. a secure location for the electrical forms switch.

①Cabinet floor securing hole data.

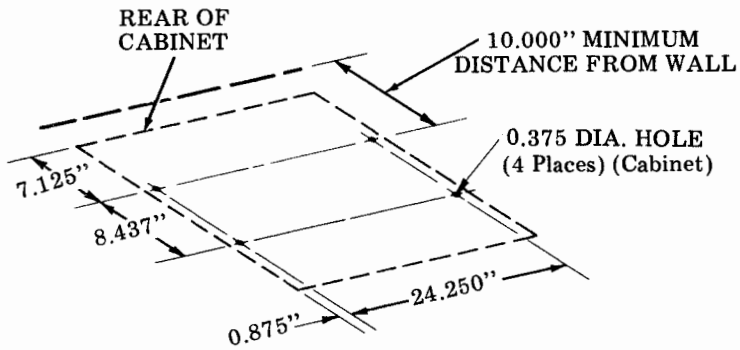

②To acquire entry security, remove the lock mounting hole knockout plug located in the handle well of the left front access door and install lock. Teletype Corporation does not supply the lock. Listed on the following page are sources with readily available locks that will meet the cabinet design.

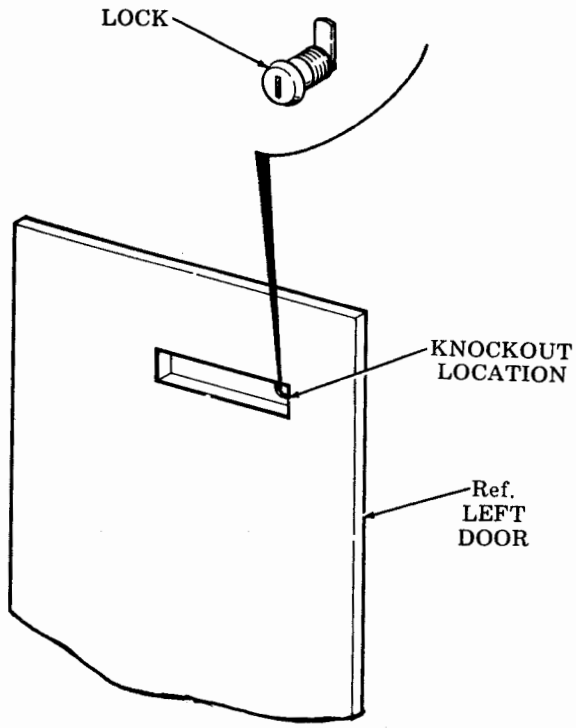

F. DISASSEMBLY, REASSEMBLY, AND PARTS (Cont)

2. CABINETS, PAPER WINDERS, AND FACILITIES (Cont)

Lock Configuration and Source

Key Removable in Locked Position Only

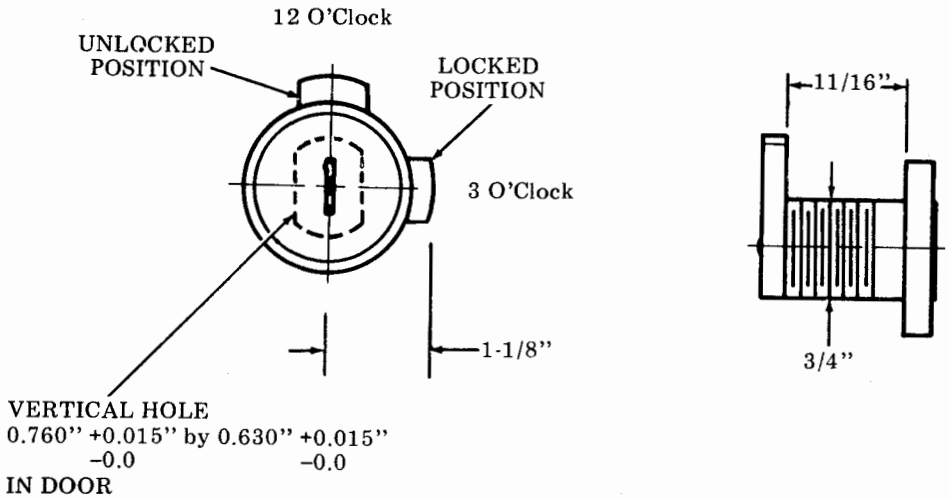

Sources: List is representative -- not an endorsement -- many others available.

Chicago Lock Company
Chicago, Illinois
§K-4153 -- AR
K-3786 -- 6TH -- AR
K-3786 -- 6T -- AR
K-3786 -- AR

§4153 -- AR
4198 -- AR
3786 -- 6TH -- AR
3786 -- 6TH -- AR
3786 -- AR
} Must also order 2693 flat washer.

Corbin Cabinet Lock
Berlin, Connecticut
15751 -- C2L
C15751 -- C2L
90 Degree Rotation
Lock at 3 o'clock
Unlock at 12 o'clock
Key removed at lock position

National Lock Hardware
Rockford, Illinois
M4 -- 0052 -- 1-1/8 -- R Type 1
M4 -- 0054 -- 1-1/8 -- R Type 1
} Must also order M5-0022-100 flat washer

§Greater degree of security obtainable with these locks.

All locks listed may be keyed alike or separately, refer to manufacturers for ordering information.

FORM switch securing procedure is as follows: Remove cover plate with filler plug from the bottom side of cabinet top cover, disconnect the two terminals of the FORM switch, carefully remove FORM switch from the top cover forms chute. Remove filler plug from cover plate and install in hole vacated by FORM switch, insert FORM switch in vacated hole of cover plate, and reconnect the two terminals. Replace cover plate to top cover and tighten mounting screws.

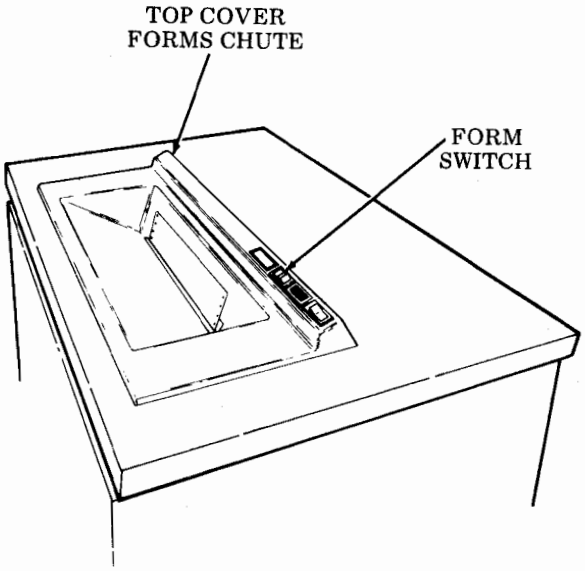

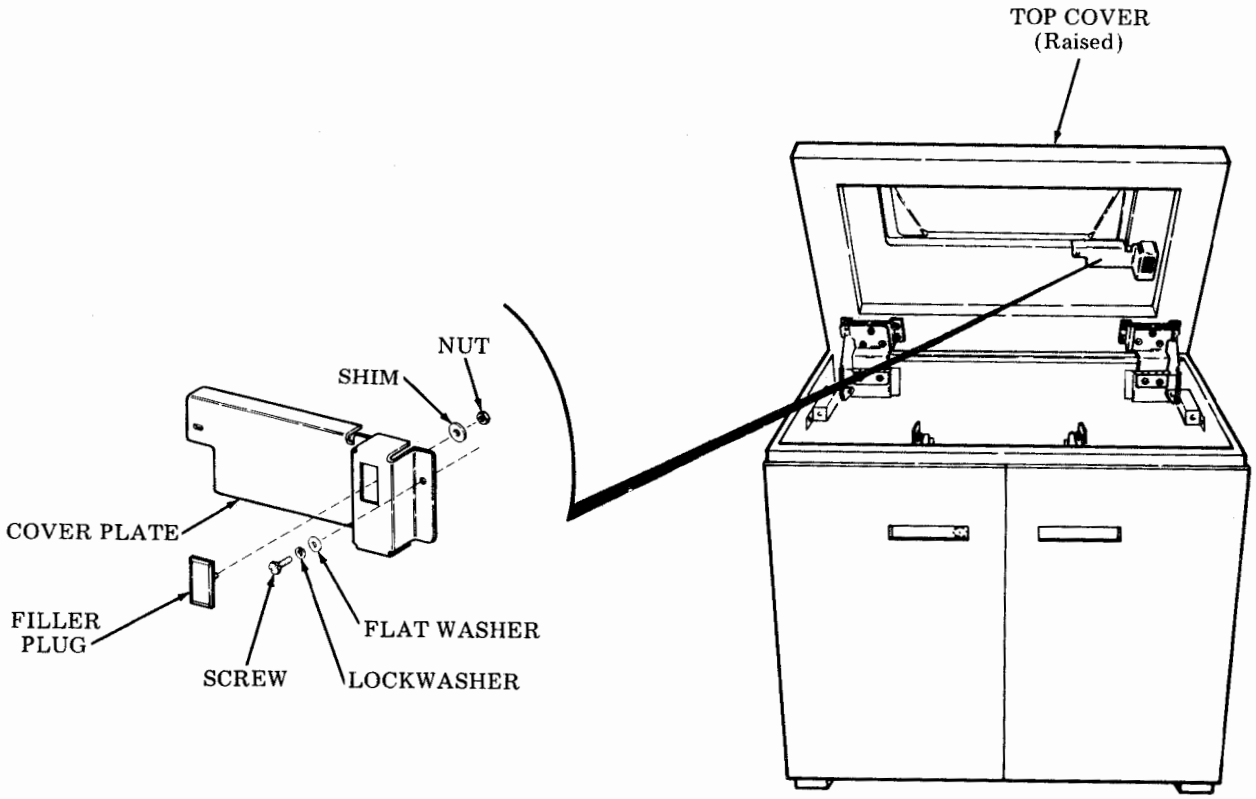

F. DISASSEMBLY, REASSEMBLY, AND PARTS (Cont)

2. CABINETS, PAPER WINDERS, AND FACILITIES (Cont)

The 40CAB302/ZZ forms access cabinet with 406374 modification kit will provide paper-out contact closure below print line in the forms access printer cabinet.

This cabinet is arranged for use with the 40P253 forms access printer.

This printer differs from the rest of the 40-type printers principally in that it pushes rather than pulls the forms through the machine.

This pushing action means that the last form cannot clear the printing line and some information could be lost. For example, if the printer is printing six-inch forms, normal operation occurs until the last form clears the form out switch (this would occur after about 1-1/2 to 2 inches of copy has been printed).

Option 48 on 410071 Printer Logic Circuit Card

If the option switch had been selected to immediately drop all further data receiving (SWE9-9 Closed), the operator must now replenish the paper supply and in some fashion, retrieve the information printed on the last (wasted) form so that it may be printed on the new stock.

Similarly, if the option switch had been selected so that the paper-out is gated with end of form (SWE9-9 Open), all the information would be sent, but the form would not move past the print line as the tractors end about 3-1/2 inches from the print line. Again, data retrieved of the last form's data would be required.

This modification kit is intended to operate the form out switch about 11 inches from the print line so that with the option switch set as in preceding paragraph, data being sent will be correctly printed on a form and no partial information will be printed on the last form.

This modification kit will operate as intended with forms up to and including 11 inches long. Forms longer than 11 inches will again be subjected to the condition explained. Forms shorter than 11 inches may result in more than one form being "wasted" at the end of a box. (Example: Using five-inch forms will result in the loss of the last two forms.)

The 406374 modification kit consists of the following parts:

Qty	Part No.	Description
2	3606	Nut
2	198670	Screw W/Washer
1	406447	Paper-Out Assembly

Assembly

Assembly of the 406374 modification kit requires the following steps:

① Take the 406447 paper-out switch assembly and mount to the front printer support bar using two 198670 screws with washers and two 3606 nuts in the holes provided. The bracket should be on top of the bar and the assembly should extend downward.

② Disconnect the cable leading from the paper-out switch which is mounted on the left-hand tractor from the printer cable.

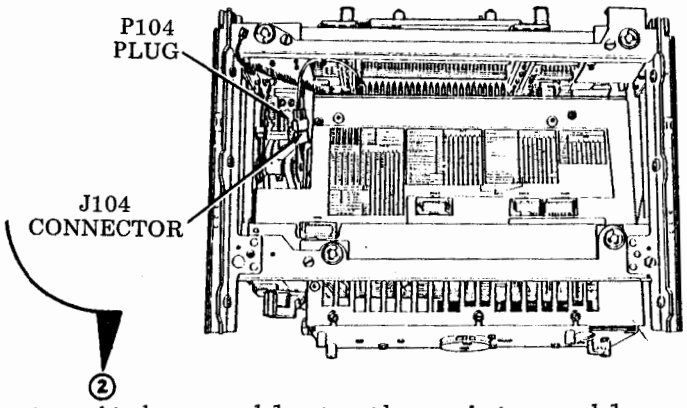

③ Connect the cable from the new paper-out switch assembly to the printer cable.

NOTE: Check the Switch Adjustment.

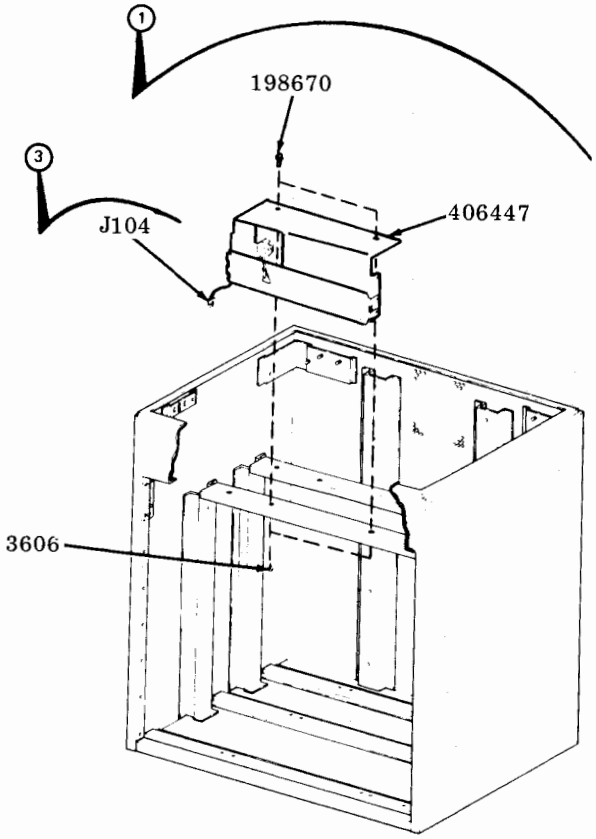

Reassemble by reversing assembly procedures.

F. DISASSEMBLY, REASSEMBLY, AND PARTS (Cont)

2. CABINETS, PAPER WINDERS, AND FACILITIES (Cont)

Switch Adjustment

Requirement
With the lever passing from the rear guide into the front paper guide to a flush condition, the "NC" contact must be open. With the lever one stock thickness beyond flush with the front paper guide, the "NC" contact must be closed.

NOTE: Operation may be determined either by the "clicking noise" or by checking continuity across pins 1 and 4 of J104 cable connector.

To Adjust
Bend switch actuator in area shown.

Special Requirements
A stack of paper or supply box should not exceed 12-1/2 inches in height as this will cause difficulty in threading the paper through the modification kit.

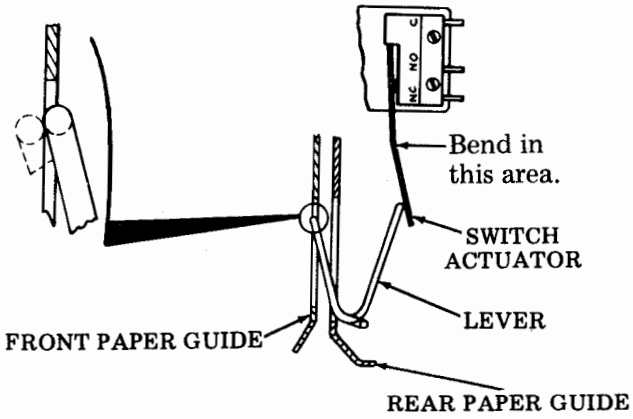

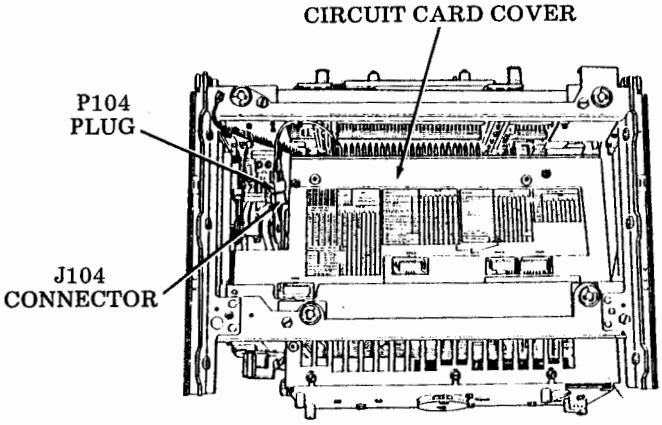

The following list contains the page numbers of all part illustrations on cabinets, paper winders, and facilities.

CONTENT PAGE

40CAB201/ZZ Printer Cabinet Core for Adjacent or RO Friction Feed Printer. 109
40CAB201/ZZ Printer Cabinet Core for Adjacent or RO Friction Feed Printer (Cont) 110
40CAB201/ZZ Printer Cabinet Core for Adjacent or RO Friction Feed Printer (Cont) 111
40CAB201/ZZ Printer Cabinet Core for Adjacent or RO Friction Feed Printer (Cont) 112
Early Design Printer Mounting Cradle for Adjacent or RO Friction Feed Printer. 112
40CAB251/AA Printer Under Monitor Cabinet 113
40CAB251/AA Printer Under Monitor Cabinet (Cont). 114
40CAB251/AA Printer Under Monitor Cabinet (Cont). 115
40CAB251/AA Printer Under Monitor Cabinet Mounting Cradle 116
40CAB251/AA Printer Under Monitor Cabinet Door. 117
40CAB251/AA Printer Under Monitor Cabinet Monitor Support 118
40CAB201/AB Logic Adjacent Cabinet. 119
40CAB201/AB Logic Adjacent Cabinet (Cont) 120
40CAB201/AB Logic Adjacent Cabinet Module, Louver, and Fan Mounting 121
40CAB251/ZZ Monitor Support Cabinet Core for Logic Under Monitor or Monitor/Opcon Support 122
40CAB251/ZZ Monitor Support Cabinet Core for Logic Under Monitor or Monitor/Opcon Support (Cont). 123
40CAB251/ZZ Monitor Support Cabinet Core for Logic Under Monitor or Monitor/Opcon Support (Cont). 124
341891 Monitor Cable -- Logic Cabinet (Right Side). 125
341911 Monitor Cable -- Printer Cabinet (Right Side). 125
402173 Monitor Cable (Logic Cabinet Adjacent) 126
405051 Monitor Cable -- Logic Under Monitor, Printer Under Monitor, or Monitor Support Cabinet (Left Side) 126
405047 AC Input Cable Assembly -- Logic Under Monitor or Adjacent Logic Cabinet 127
405048 AC Input Cable Assembly -- Adjacent or RO Friction Feed Printer Cabinet and Logic Adjacent. 127
405049 AC Input Cable Assembly -- Printer Under Monitor Cabinet 127
400621 SSI Cable Assembly for Friction Feed Printer Under Monitor Cabinet 128
400568 Cable Assembly (Opcon) for RO Friction Feed Printer Cabinet
400620 Cable Assembly (Opcon) for Printer Under Monitor Cabinet 129
400598 Interlock Cable Assembly for Friction Feed Printer Cabinet 130
405050 AC Distribution Assembly (Early Design). 131
407090 AC Switch Assembly (Late Design) 132
40CAB351/ZZ Printer Cabinet Core for Adjacent or RO Tractor Feed Printer -- 80-Column. 133
40CAB351/ZZ Printer Cabinet Core for Adjacent or RO Tractor Feed Printer -- 80-Column (Cont) 134
40CAB351/ZZ Printer Cabinet Core for Adjacent or RO Tractor Feed Printer -- 80-Column (Cont) 135

F. DISASSEMBLY, REASSEMBLY, AND PARTS (Cont)

2. CABINETS, PAPER WINDERS, AND FACILITIES (Cont)

CONTENT PAGE

40CAB351/ZZ Printer Cabinet Core for Adjacent or RO Tractor Feed Printer -- 80-Column (Cont) 136
40CAB353/ZZ Printer Cabinet Core for Adjacent or RO Tractor Feed Printer -- 132-Column 137
40CAB353/ZZ Printer Cabinet Core for Adjacent or RO Tractor Feed Printer -- 132-Column (Cont). 138
40CAB353/ZZ Printer Cabinet Core for Adjacent or RO Tractor Feed Printer -- 132-Column (Cont). 139
40CAB353/ZZ Printer Cabinet Core for Adjacent or RO Tractor Feed Printer -- 132-Column (Cont). 140
Pads Used on 40CAB351/ZZ Printer Cabinet Core for Adjacent or RO Tractor Feed Printer -- 80-Column 141
Pads Used on 40CAB353/ZZ Printer Cabinet Core for Adjacent or RO Tractor Feed Printer -- 132-Column. 141
Interlock and Paper Alarm for 80- and 132-Column Tractor Feed Printer Cabinets. 142
Cradle and Latch Mechanism for Adjacent or RO Tractor Feed Printer. 143
403892 AC Cable Assembly -- Tractor Feed Printer Cabinet. 144
408051 Modification Kit to Provide Logic Under Monitor Cabinet With Late Design Ventilation Assembly. 144
405562 Modification Kit for Monitor/Opcon Support Cabinet 145
405563 Modification Kit Used on 40CAB251/ZZ Cabinet to Form a 40CAB251/AB Cabinet 146
405563 Modification Kit Used on 40CAB251/ZZ Cabinet to Form a 40CAB251/AB Cabinet (Cont). 147
406047 Modification Kit Used on 40CAB251/ZZ Cabinet to Form a 40CAB251/AE Cabinet 148
405671 (40CAB353/ZZ -- 132-Column), 407025 (40CAB351/ZZ -- 80-Column) and 407026 (40CAB351/ZZ -- 80-Column) Modification Kits 149
407024 EIA Integrated Controller Modification Kit for 40CAB351/ZZ (80-Column) and 40CAB353/ZZ (132-Column) Cabinets 150
407042 Modification Kit for Adjacent Friction Feed Printer Cabinet and 407043 Modification Kit for RO Friction Feed Printer Cabinet 151
407200 Modification Kit to Facilitate Handling Single-Ply Fanfold Paper 152
407202 Dome Counterbalance Modification Kit for 80-Column Tractor Feed Cabinets 152
40CAB371/ZZ Printer Cabinet Core for Noise Reduced Friction Feed Cabinet 153
40CAB371/ZZ Printer Cabinet Core for Noise Reduced Friction Feed Cabinet (Cont). 154
40CAB371/ZZ Printer Cabinet Core for Noise Reduced Friction Feed Cabinet (Cont). 155
40CAB371/ZZ Printer Cabinet Core for Noise Reduced Friction Feed Cabinet (Cont). 156

CONTENT PAGE

407100 and 407102 Modification Kits for 40CAB371/ZZ Cabinets. 157
407101 Modification Kit for 40CAB371/ZZ Cabinet 158
407101 Modification Kit for 40CAB371/ZZ Cabinet (Cont). 159
40CAB901 Series Cabinet (Early Design). 160
40CAB901 Series Cabinet (Late Design) 161
Pedestal Door Components. 162
407285 AC Distribution Assembly (Late Design) 163
401665 AC Distribution Panel Assembly (Early Design). 164
407378 RO Module Assembly for 40CAB901/AF Cabinet (Air-Flow Through Rear) 165
KDP Module Assembly for 40CAB901/AG Cabinet (Air-Flow Through Rear) 165
401643 RO Controller Cable Assembly 166
408050 Ventilation Assembly 167
408030 Fan Guard Assembly 167
408053 Modification Kit to Provide Ventilation Assembly to 40CAB901/AF, AG (Air-Flow Through Bottom) and 40CAB902/AB Cabinets. 168
408054 Modification Kit to Provide Ventilation Assembly to 40CAB901/AF and AG (Air-Flow Through Rear) 168
401725 Modification Kit to Provide a Pedestal Type Model 40 Cabinet With Data Set 202D or 202R Mounting Facilities (40CAB901/XX). 169
408045 Modification Kit to Provide a Pedestal With AC Power Distribution, Terminal Block, Transformer Mounting Facility and Cable Storage 169
408047 Modification Kit to Provide Cable Storage Facilities 170
408049 Modification Kit to Provide Warning Latch and Label. 170
40CAB902/XX Cabinet (Pedestal Type) 171
Pedestal Door and Module. 172
40CAB902 and 40CAB904 Pedestal. 173
401200 Model 40 Copyholder. 174
403567 Holder Assembly for Mounting a Data Set 202S or 202T to a Pedestal Type Model 40 Cabinet 175
Mounting for the 345630 EIA Terminal Switch Assembly. 176
40BSE101 Monitor Base 177
405614 AC Distribution Assembly 178
40BSE201 Operator Console (KD) Base 179
40BSE202 Operator Console (KD) Wide Base. 180
Interconnecting Cables for KDP and RO Sets. 181
341893 Monitor Extension Cable Assembly 182
341895 Printer Extension Cable Assembly 182
341896 Data Set Cable Assembly. 183
401640 Printer Extension Cable Assembly 183
401641 Opcon Extension Cable Assembly 184
405611 AC Cord Assembly 184
40CAB302/ZZ Printer Cabinet Core for Forms Access Printer Cabinet 185
40CAB302/ZZ Printer Cabinet Core for Forms Access Printer Cabinet (Cont). . 186

F. DISASSEMBLY, REASSEMBLY, AND PARTS (Cont)

2. CABINETS, PAPER WINDERS, AND FACILITIES (Cont)

CONTENT PAGE

40CAB302/ZZ Printer Cabinet Core for Forms Access Printer Cabinet (Cont). . 187
40CAB302/ZZ Printer Cabinet Core for Forms Access Printer Cabinet (Cont). . 188
406432 Cable Assembly 189
406361 AC Distribution Assembly 190
Label and Label Holder for 40-Type Terminals. 191
406374 Modification Kit to Provide Paper-Out Contact Closure
11 Inches Below Print Line in the Forms Access Printer Cabinet. 192
40PWU101 Paper Winder Mounted Under Cabinet (17-inch wide). 194
40PWU102 Paper Winder Mounted Under Cabinet (17-inch wide). 195
40PWU102 Paper Winder Mounted Under Cabinet (20-inch wide). 196
Motor 197
Clutch Mechanism. 198
Paper Sensing Arm Mechanism (Late Design) 199
Paper Spool 200

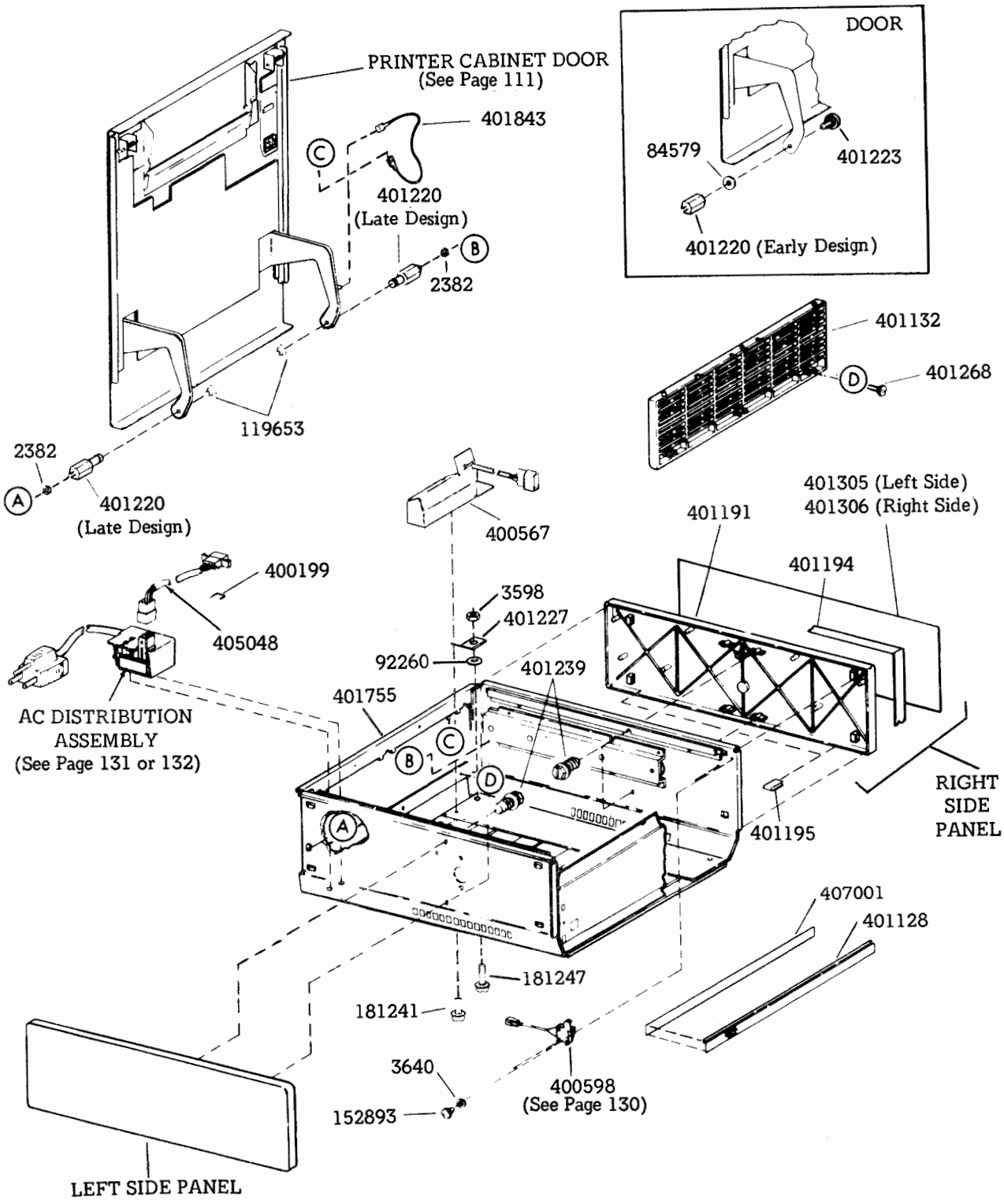

40CAB201/ZZ Printer Cabinet Core for Adjacent or RO Friction Feed Printer

F. DISASSEMBLY, REASSEMBLY, AND PARTS (Cont)

2. CABINETS, PAPER WINDERS, AND FACILITIES (Cont)

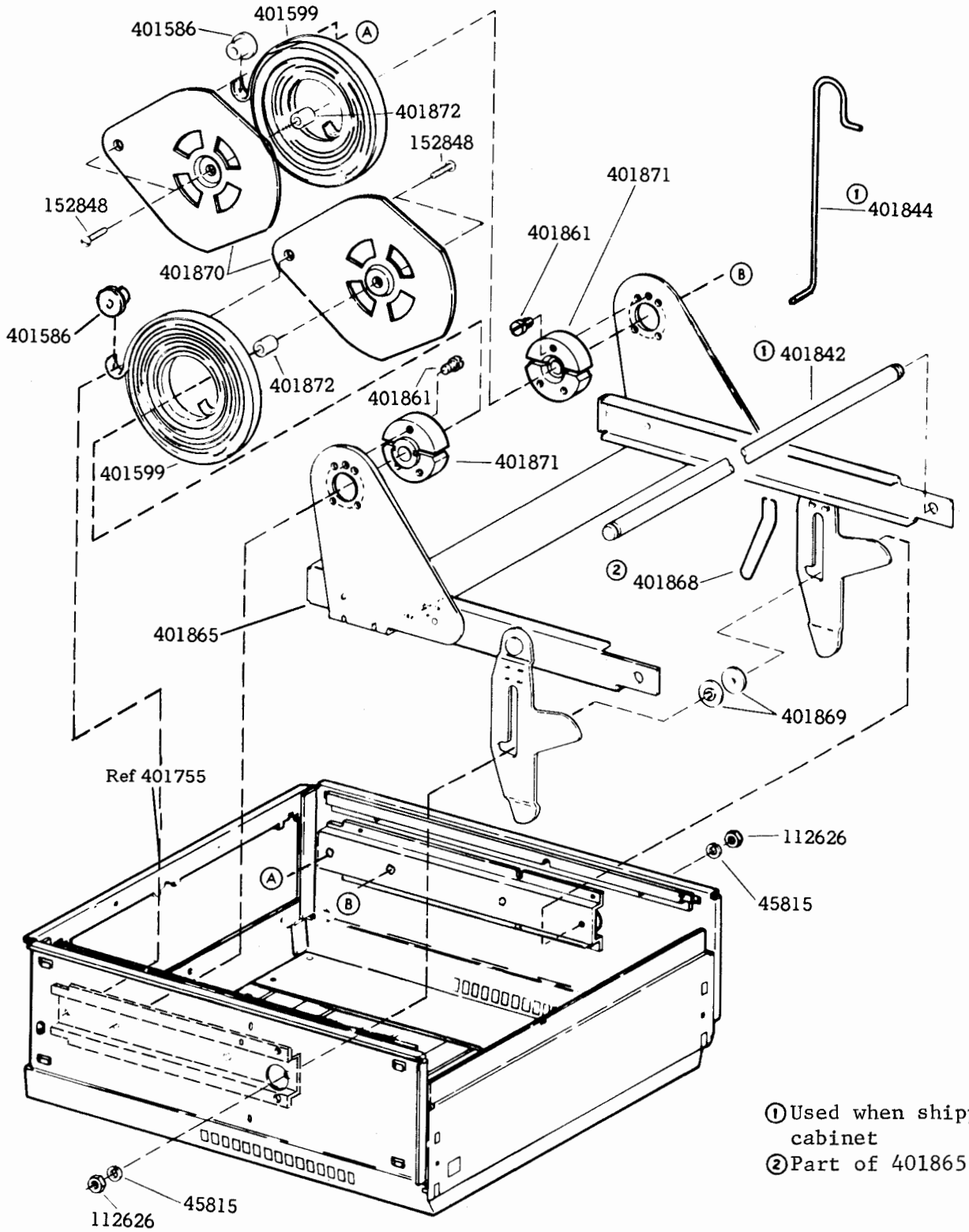

① Used when shipping cabinet
② Part of 401865

40CAB201/ZZ Printer Cabinet Core for Adjacent or RO Friction Feed Printer (Cont)

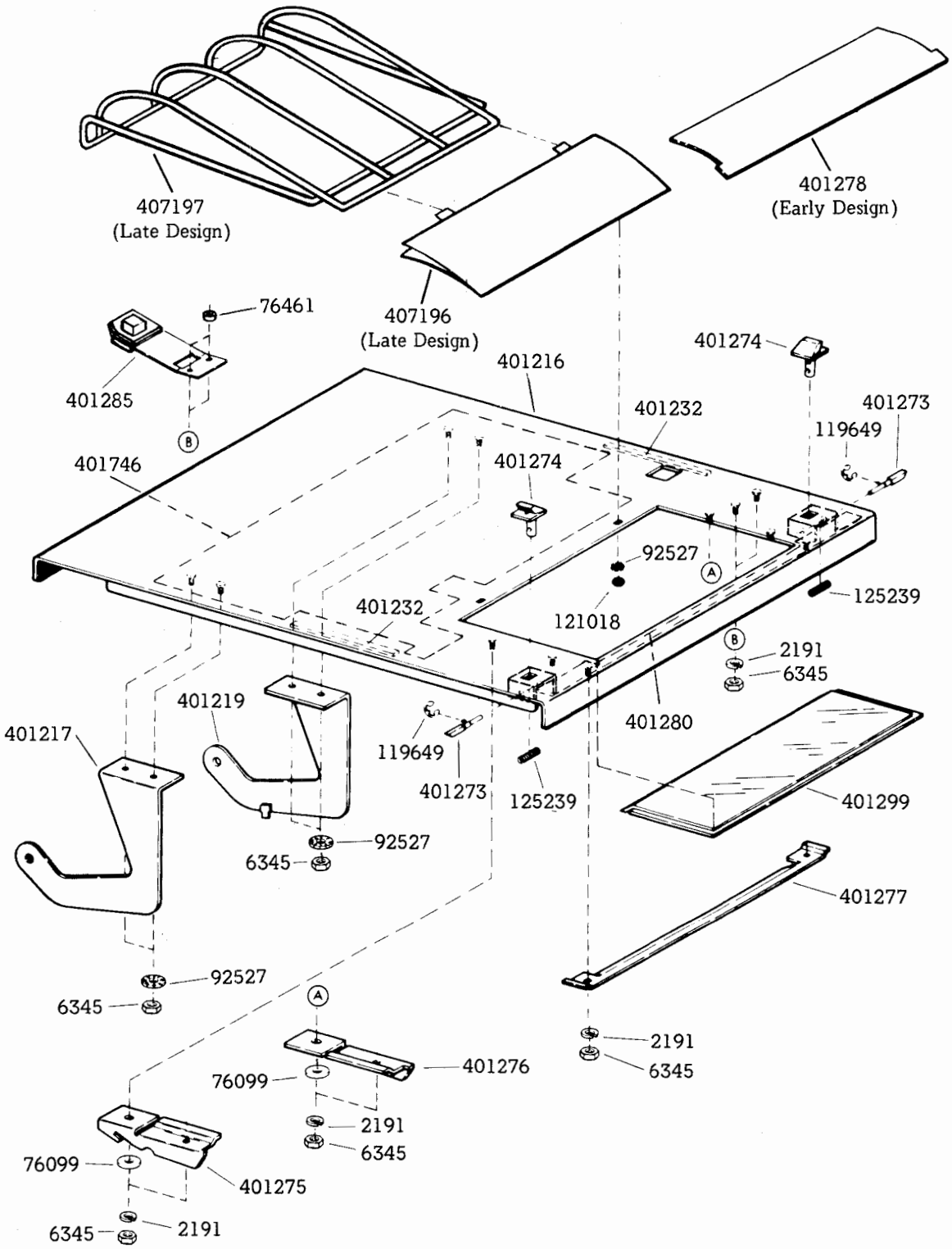

40CAB201/ZZ Printer Cabinet Core for
Adjacent or RO Friction Feed Printer (Cont)

F. DISASSEMBLY, REASSEMBLY, AND PARTS (Cont)

2. CABINETS, PAPER WINDERS, AND FACILITIES (Cont)

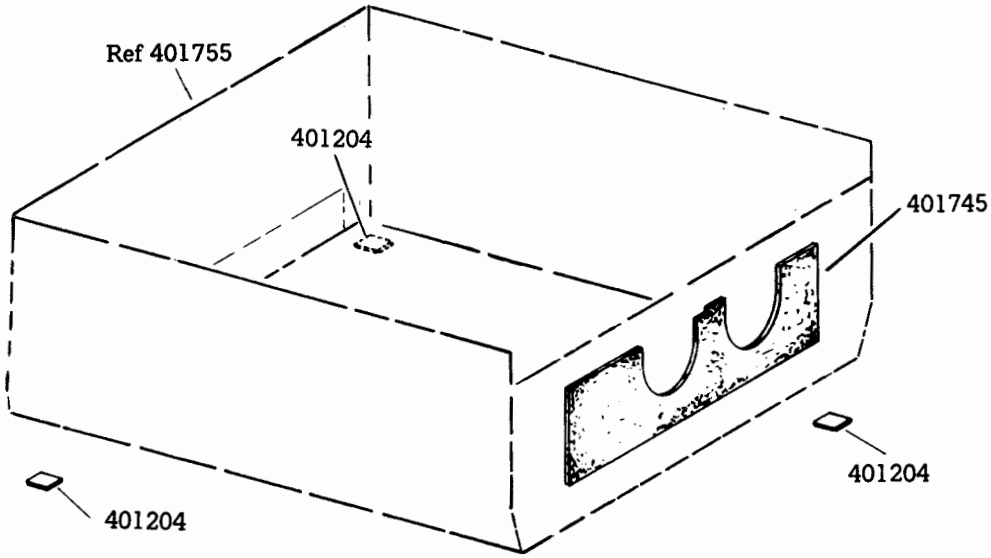

40CAB201/ZZ Printer Cabinet Core for Adjacent or RO Friction Feed Printer (Cont)

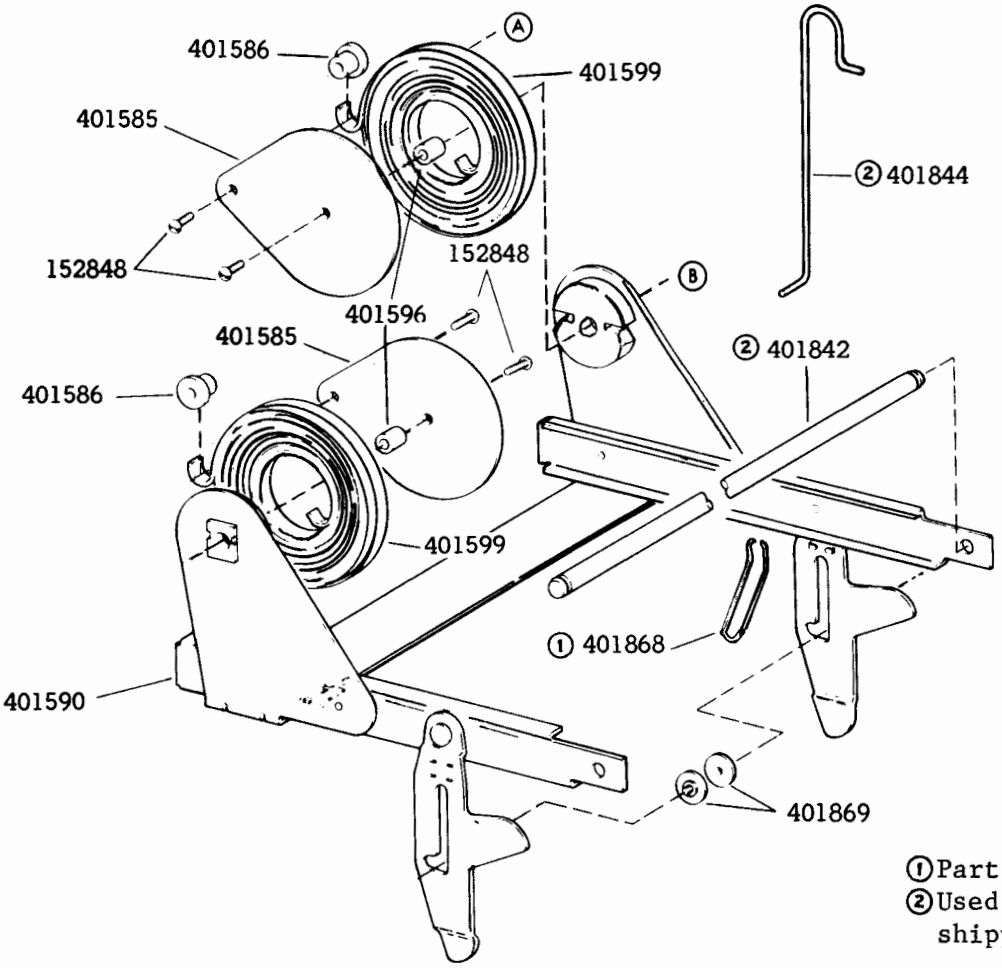

①Part of 401865
②Used for cabinet shipping

Early Design Printer Mounting Cradle for Adjacent or RO Friction Feed Printer

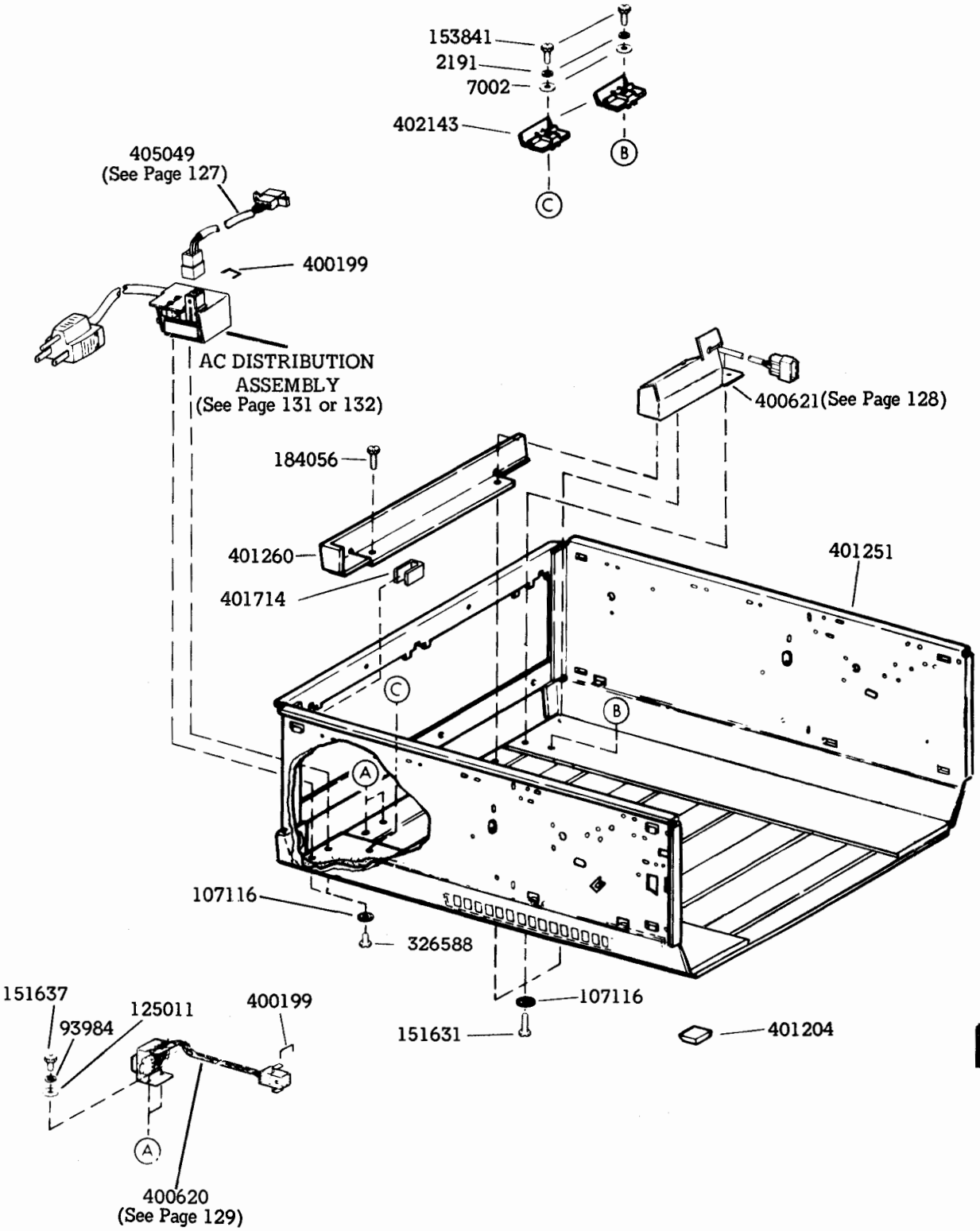

40CAB251/AA Printer Under Monitor Cabinet

F. DISASSEMBLY, REASSEMBLY, AND PARTS (Cont)

2. CABINETS, PAPER WINDERS, AND FACILITIES (Cont)

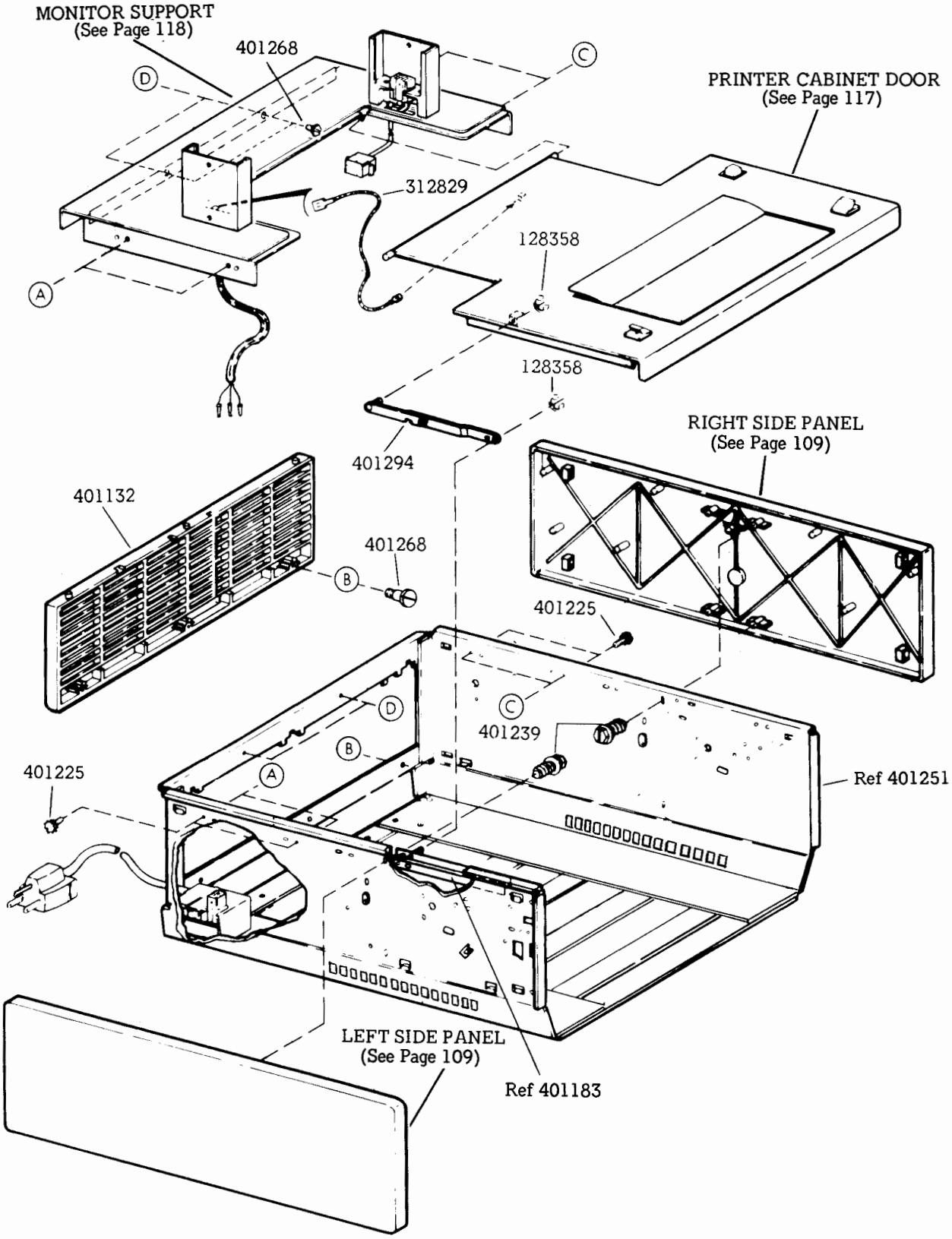

40CAB251/AA Printer Under Monitor Cabinet (Cont)

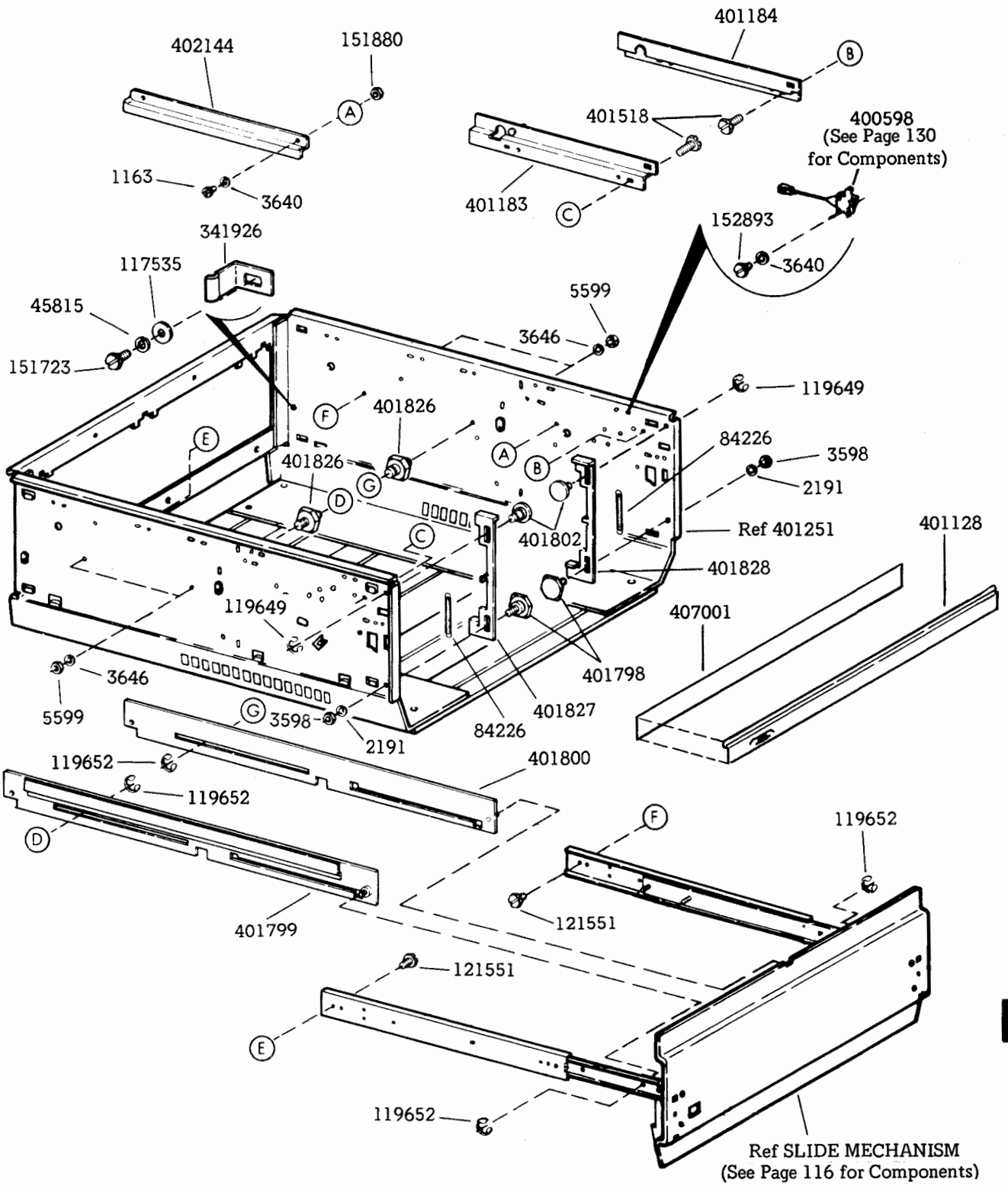

40CAB251/AA Printer Under Monitor Cabinet (Cont)

F. DISASSEMBLY, REASSEMBLY, AND PARTS (Cont)

2. CABINETS, PAPER WINDERS, AND FACILITIES (Cont)

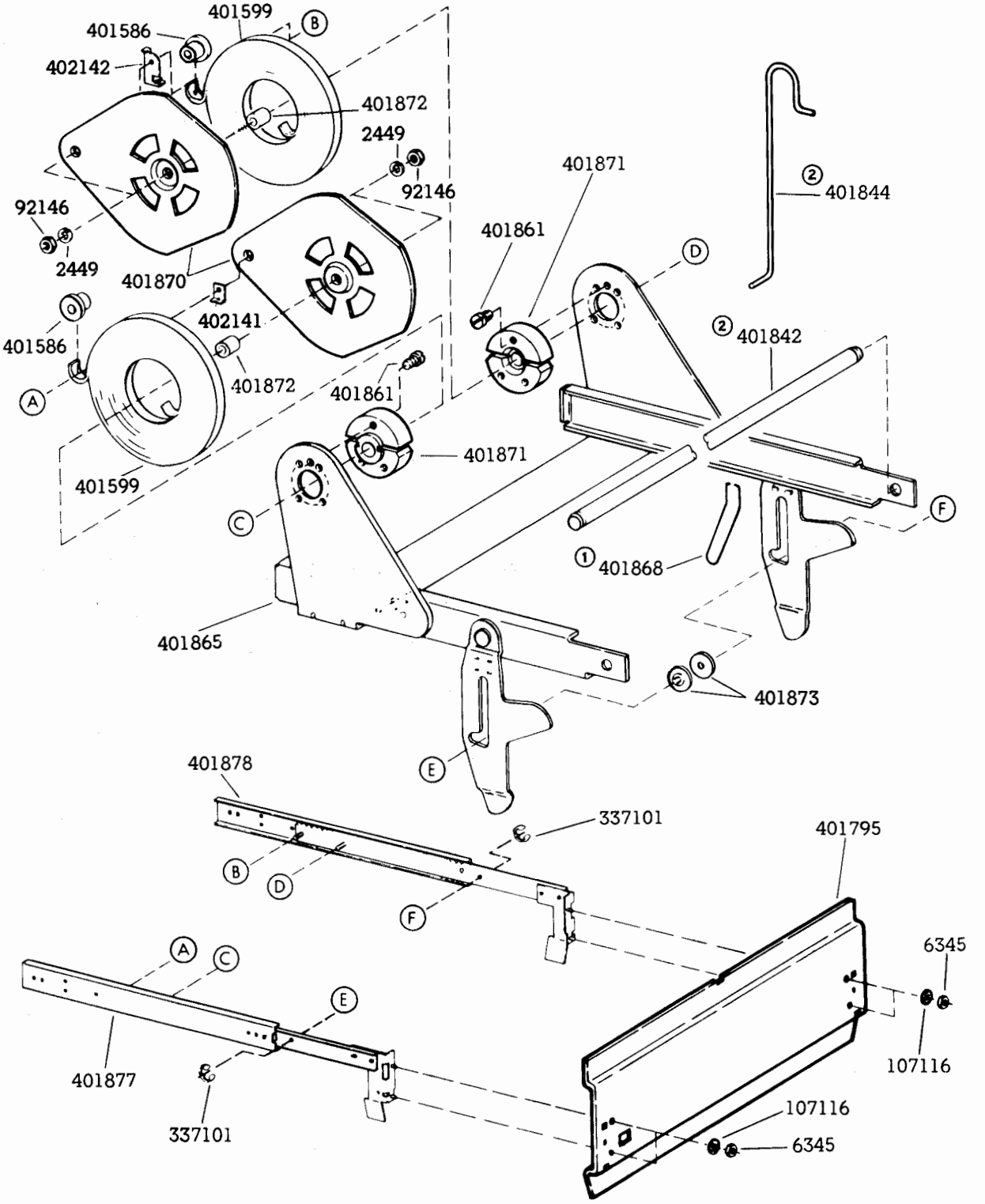

① Part of 401865
② Used when shipping cabinet

40CAB251/AA Printer Under Monitor Cabinet Mounting Cradle

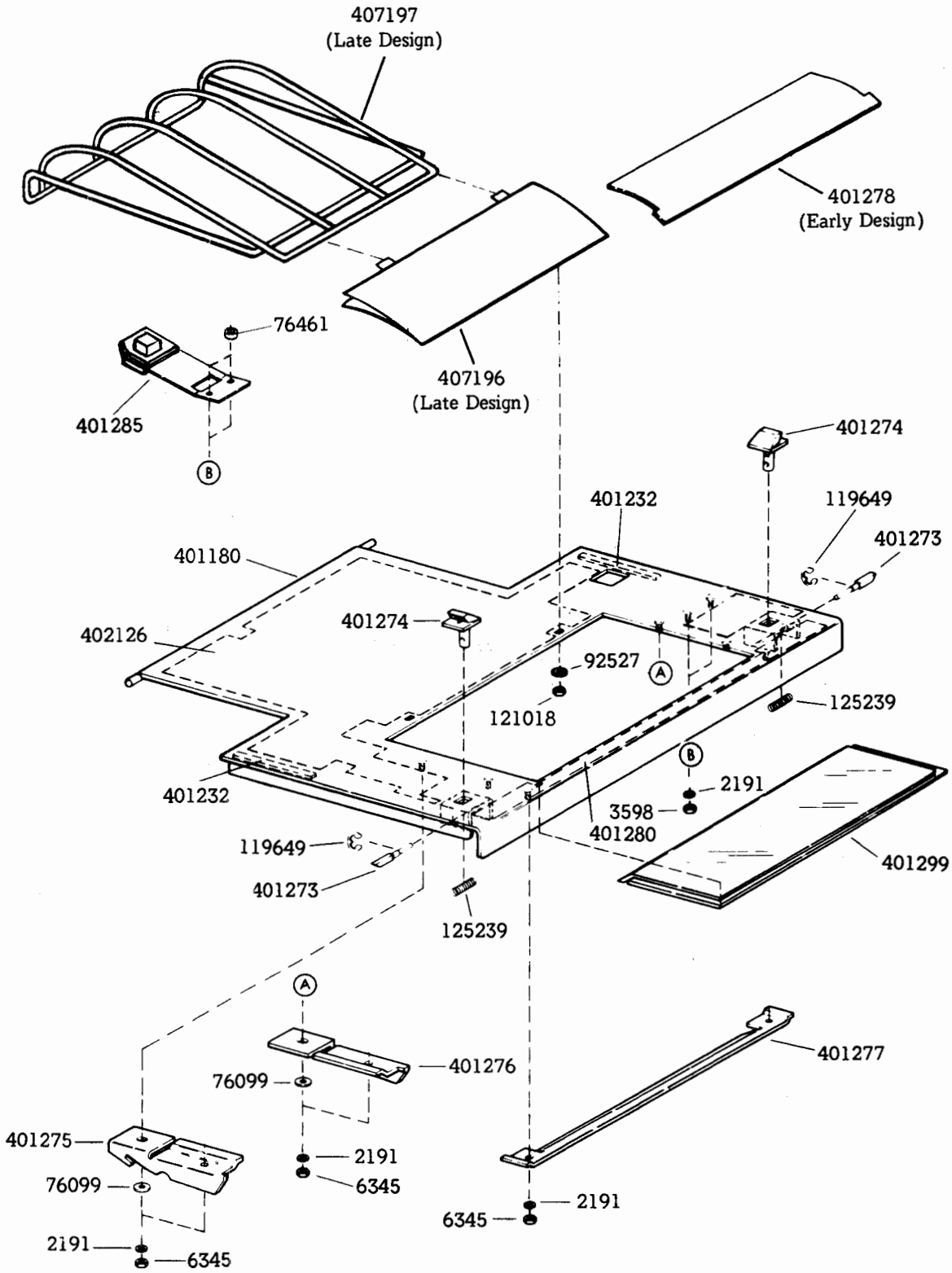

40CAB251/AA Printer Under Monitor Cabinet Door

F. DISASSEMBLY, REASSEMBLY, AND PARTS (Cont)

2. CABINETS, PAPER WINDERS, AND FACILITIES (Cont)

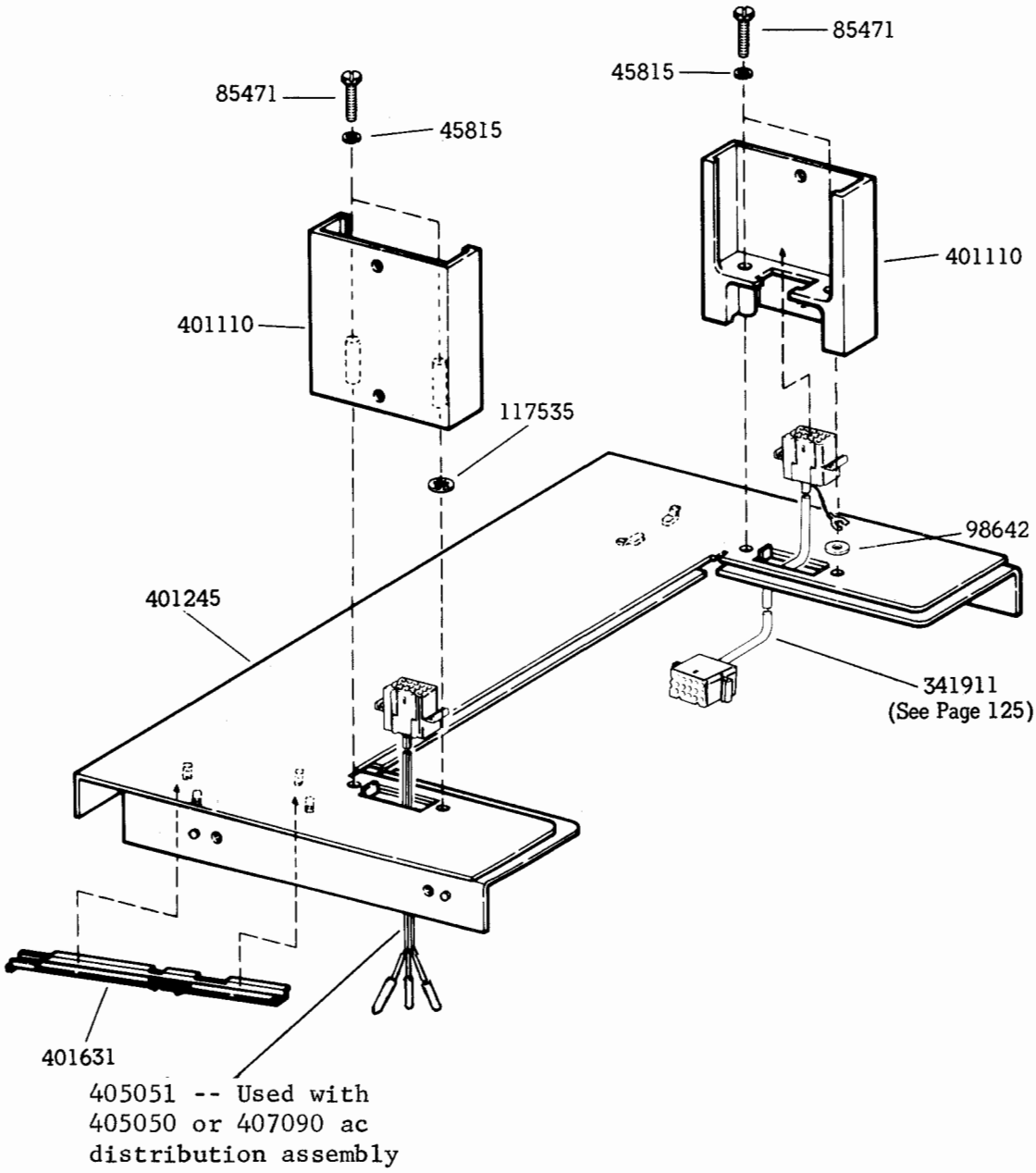

40CAB251/AA Printer Under Monitor Cabinet Monitor Support

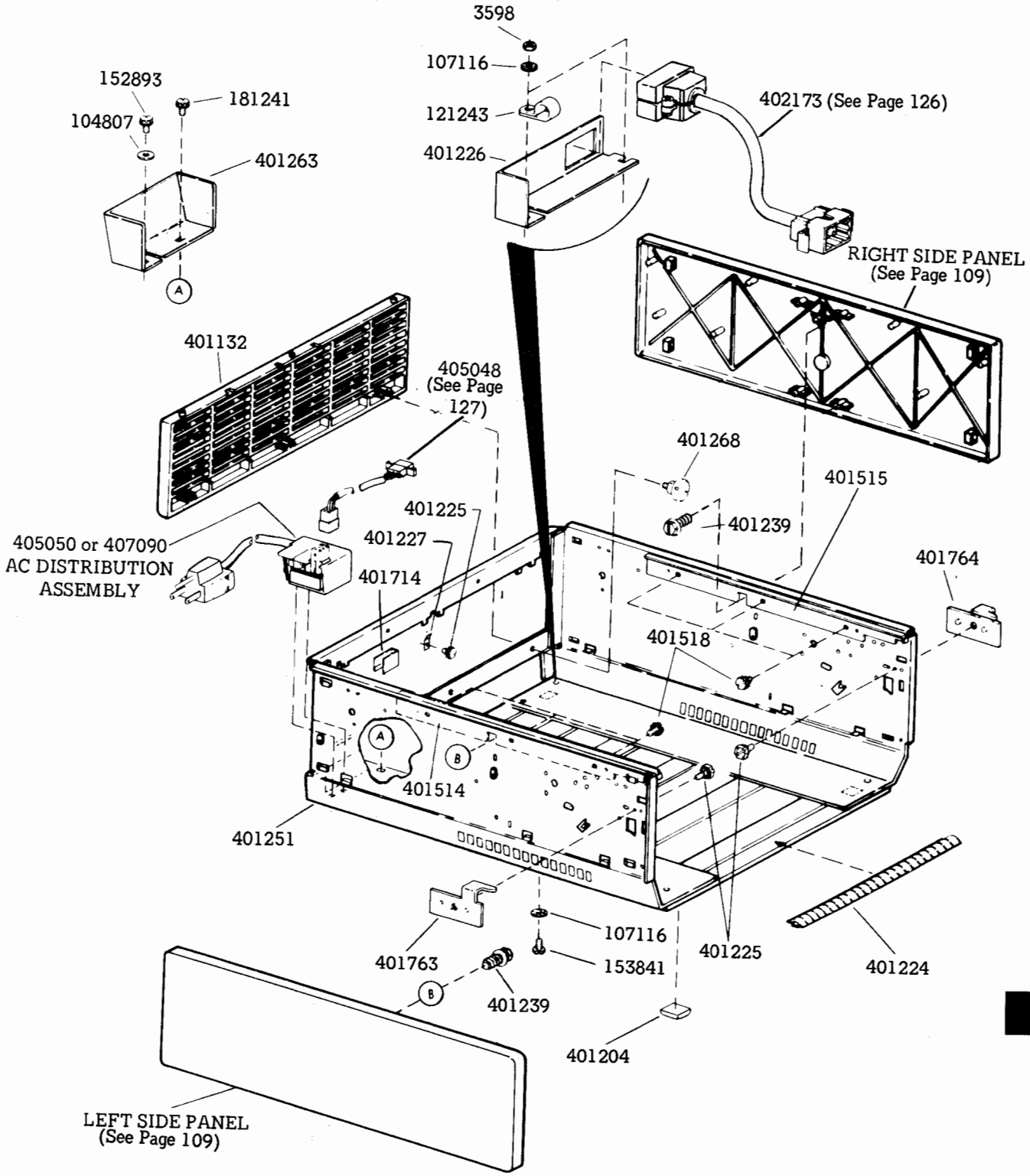

40CAB201/AB Logic Adjacent Cabinet

F. DISASSEMBLY, REASSEMBLY, AND PARTS (Cont)

2. CABINETS, PAPER WINDERS, AND FACILITIES (Cont)

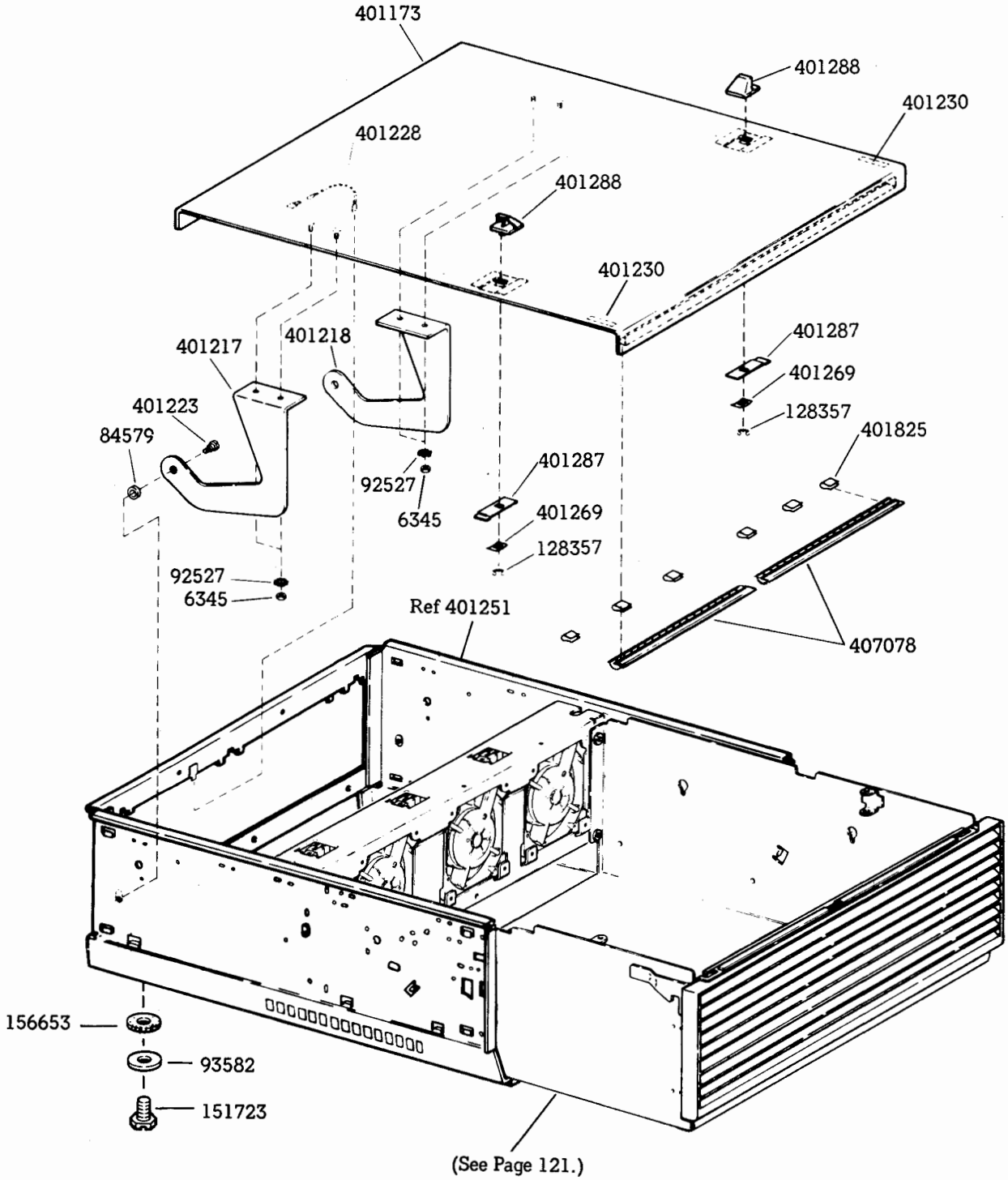

40CAB201/AB Logic Adjacent Cabinet (Cont)

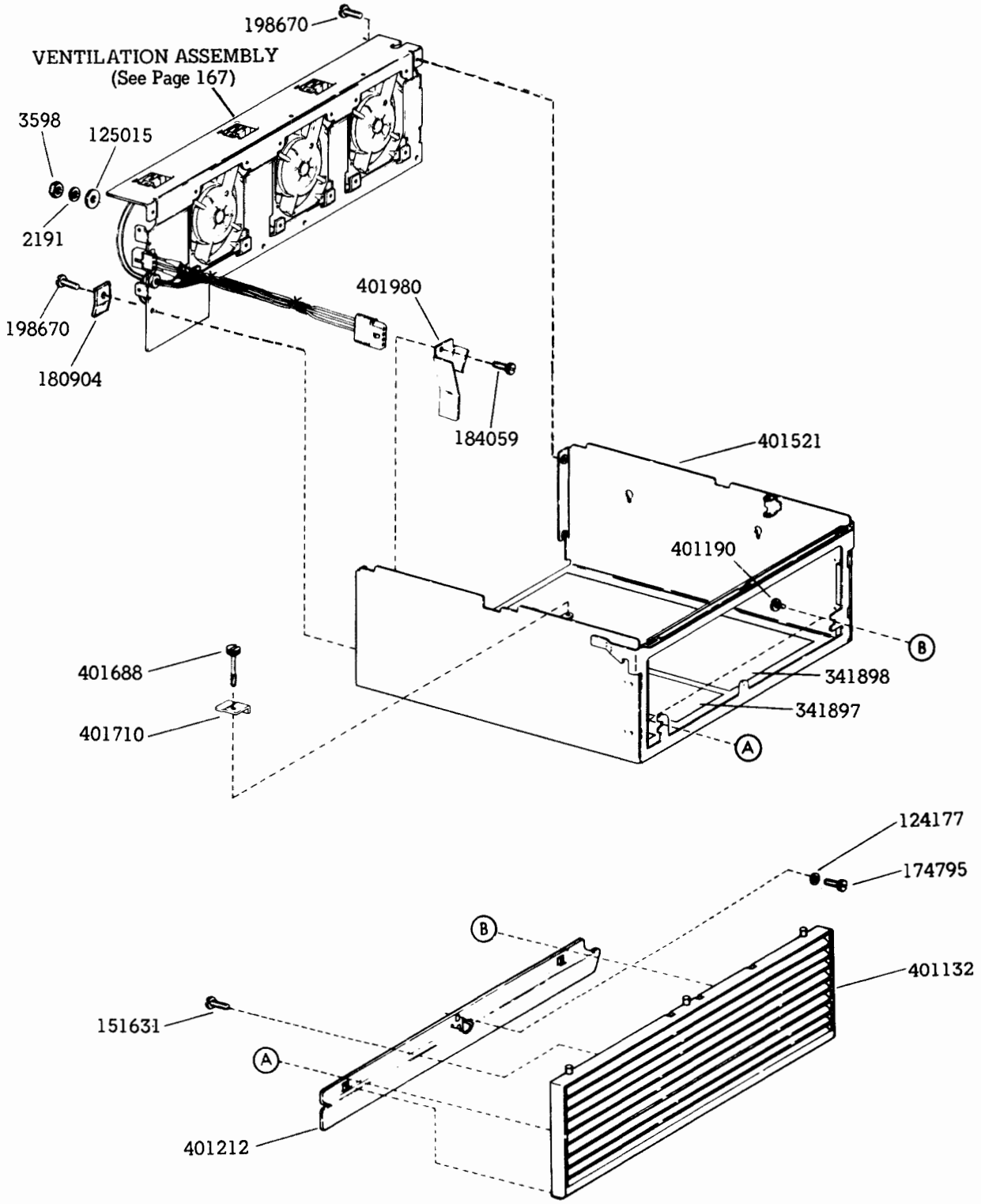

40CAB201/AB Logic Adjacent Cabinet Module, Louver, and Fan Mounting

F. DISASSEMBLY, REASSEMBLY, AND PARTS (Cont)

2. CABINETS, PAPER WINDERS, AND FACILITIES (Cont)

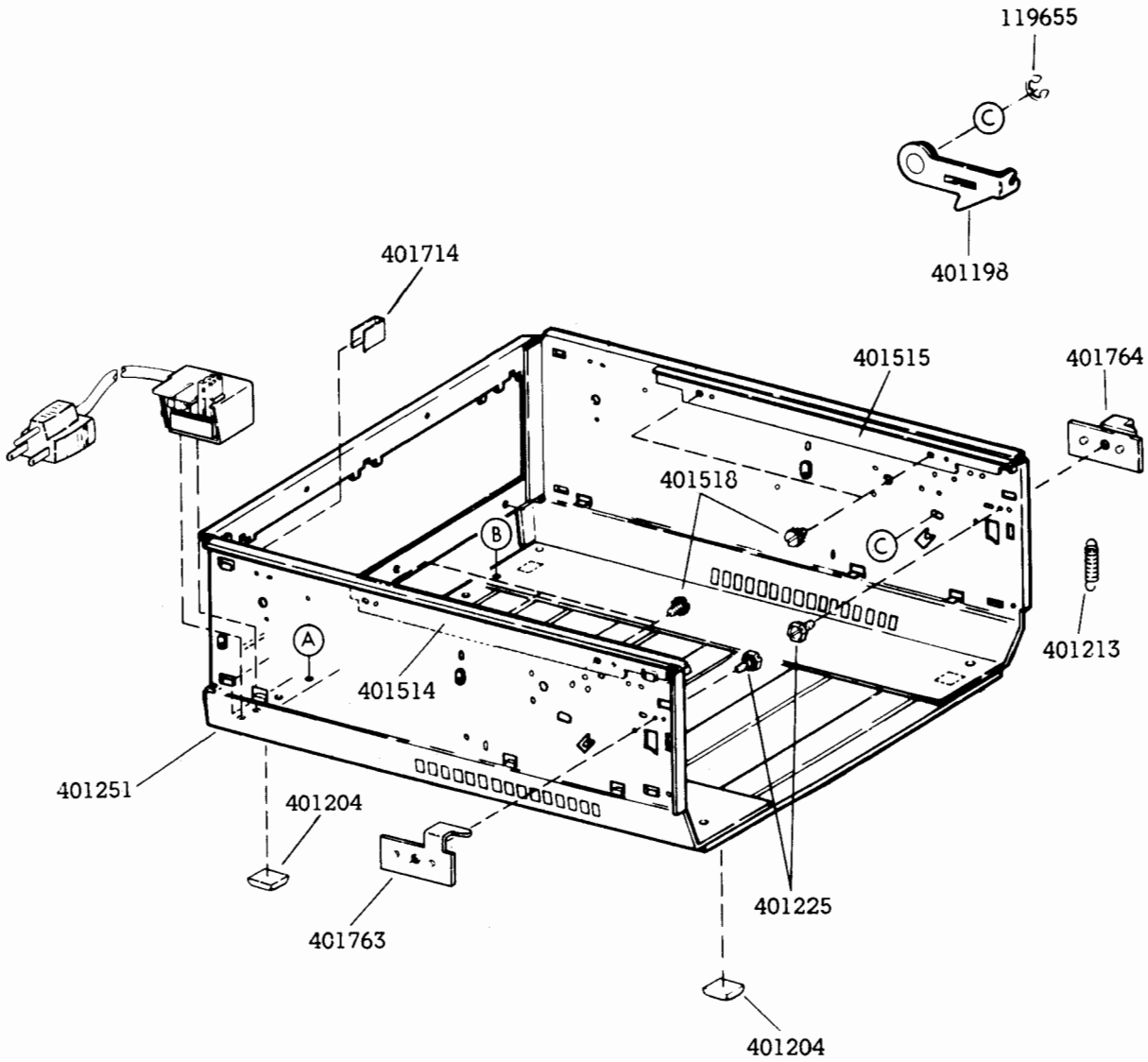

40CAB251/ZZ Monitor Support Cabinet Core for Logic Under Monitor or Monitor/Opcon Support

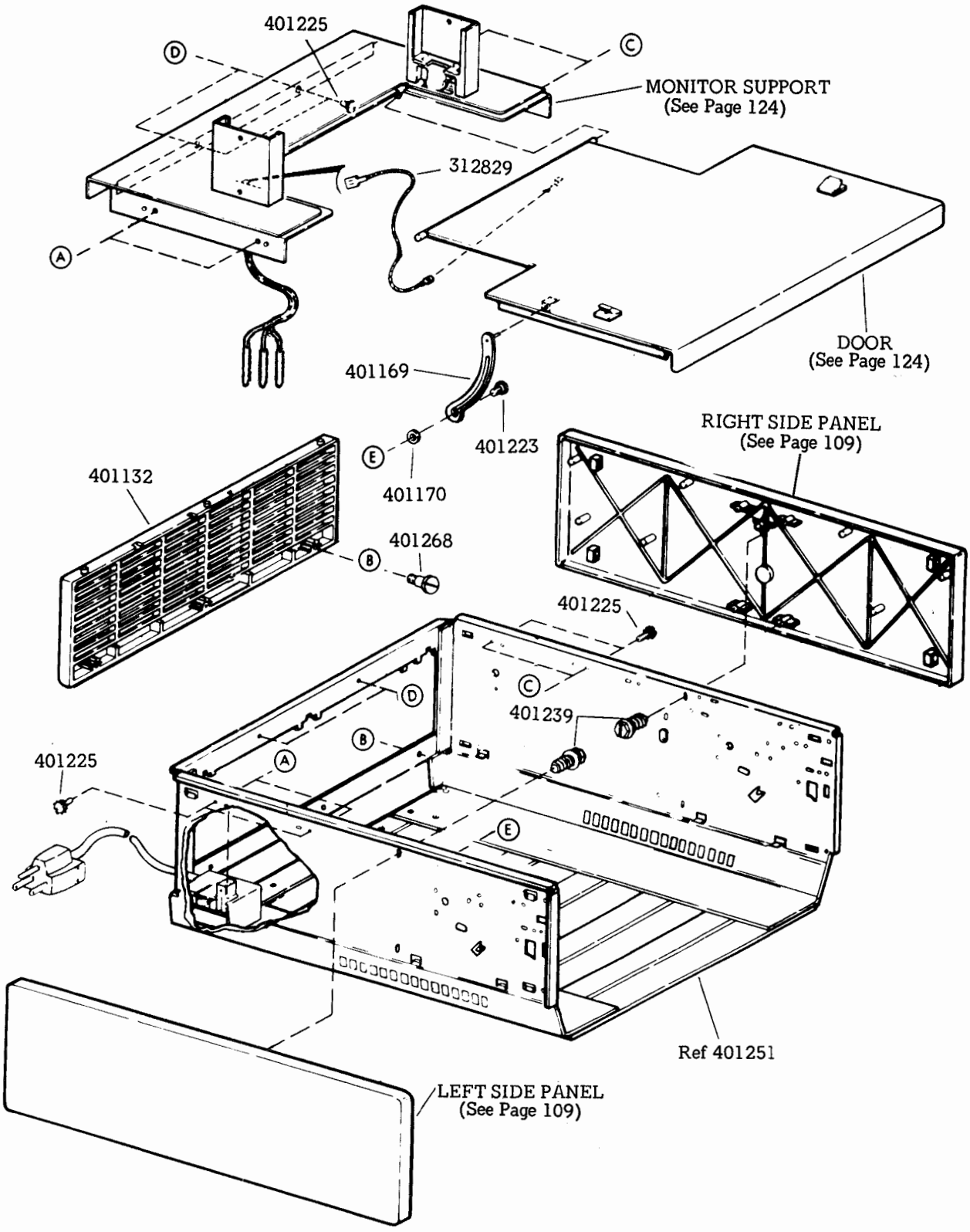

40CAB251/ZZ Monitor Support Cabinet Core for Logic Under Monitor or Monitor/Opcon Support (Cont)

F. DISASSEMBLY, REASSEMBLY, AND PARTS (Cont)

2. CABINETS, PAPER WINDERS, AND FACILITIES (Cont)

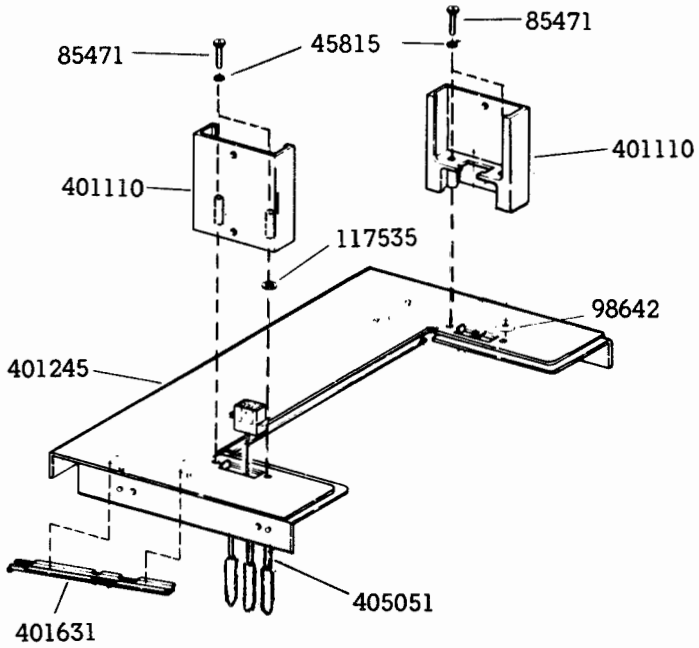

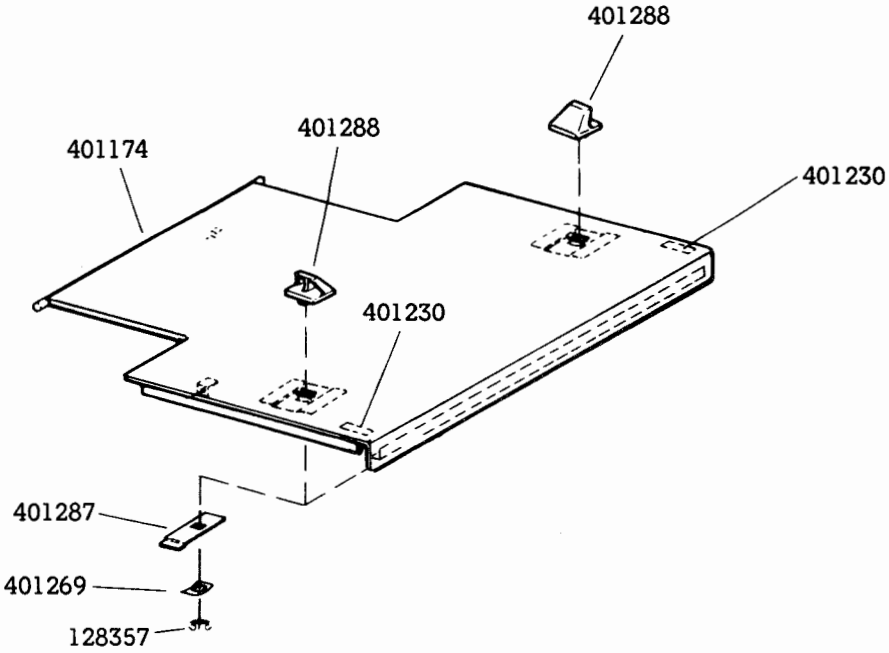

40CAB251/ZZ Monitor Support Cabinet Core for Logic Under Monitor or Monitor/Opcon Support (Cont)

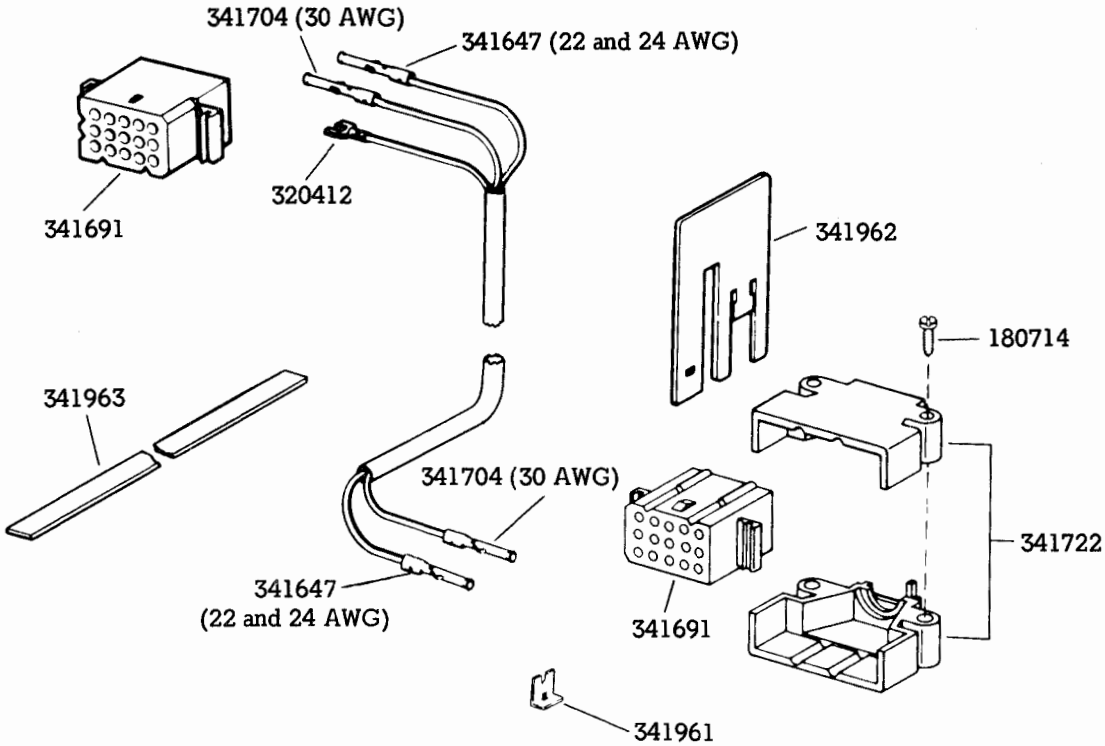

341891 Monitor Cable -- Logic Cabinet (Right Side)

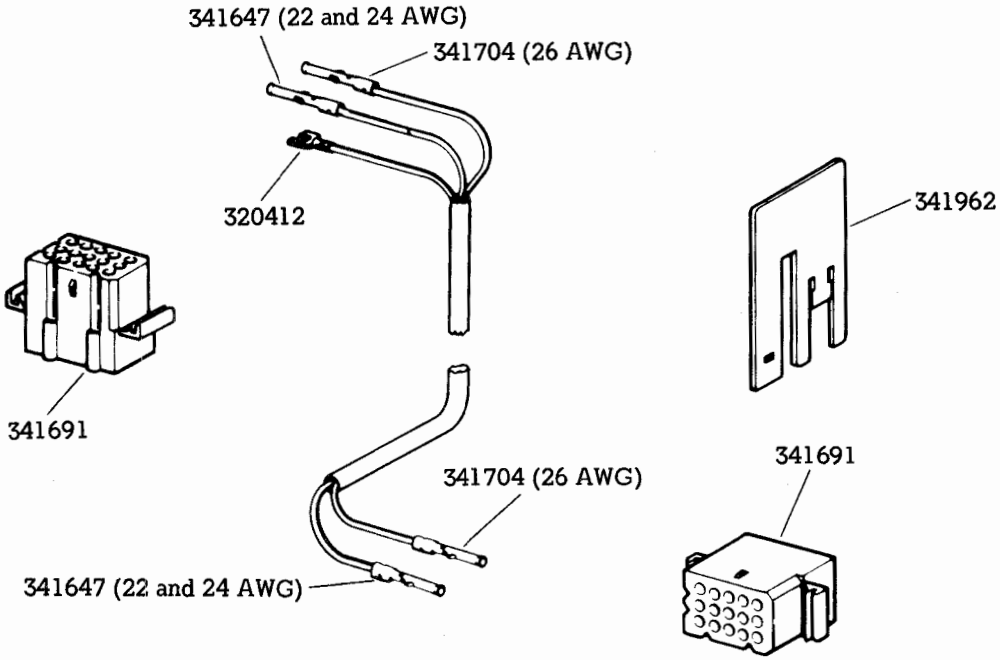

341911 Monitor Cable -- Printer Cabinet (Right Side)

F. DISASSEMBLY, REASSEMBLY, AND PARTS (Cont)

2. CABINETS, PAPER WINDERS, AND FACILITIES (Cont)

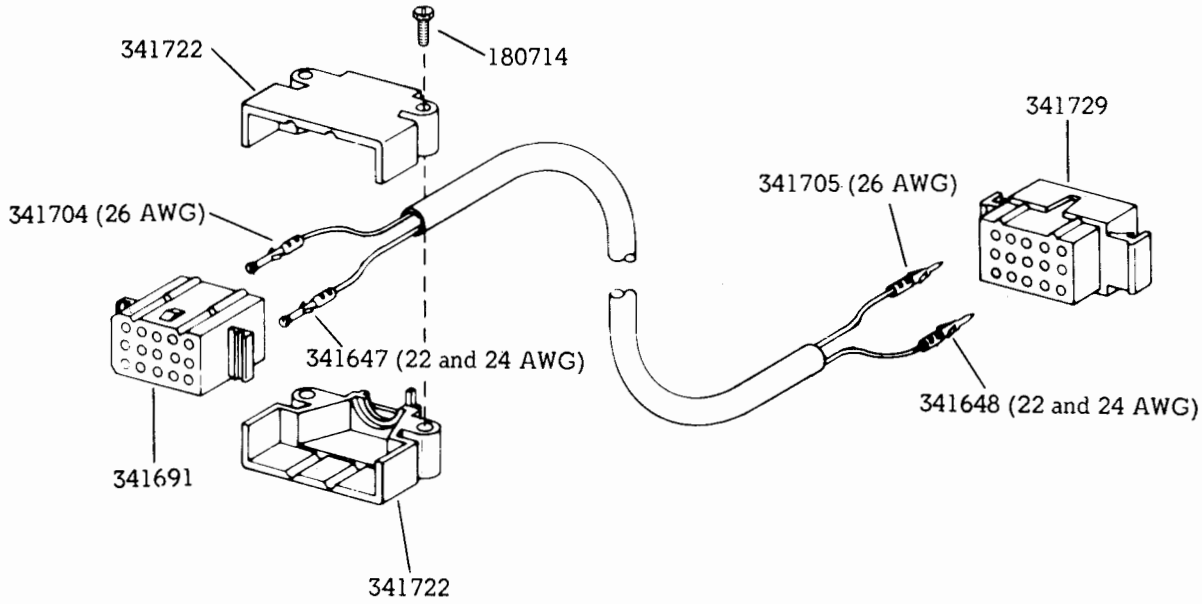

402173 Monitor Cable (Logic Cabinet Adjacent)

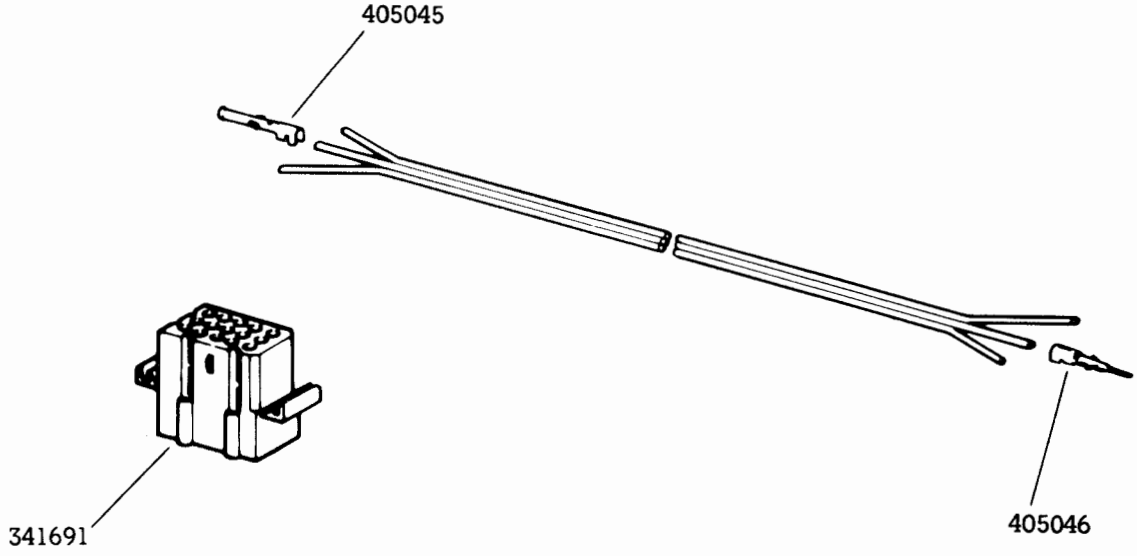

405051 Monitor Cable -- Logic Under Monitor, Printer Under Monitor, or Monitor Support Cabinet (Left Side)

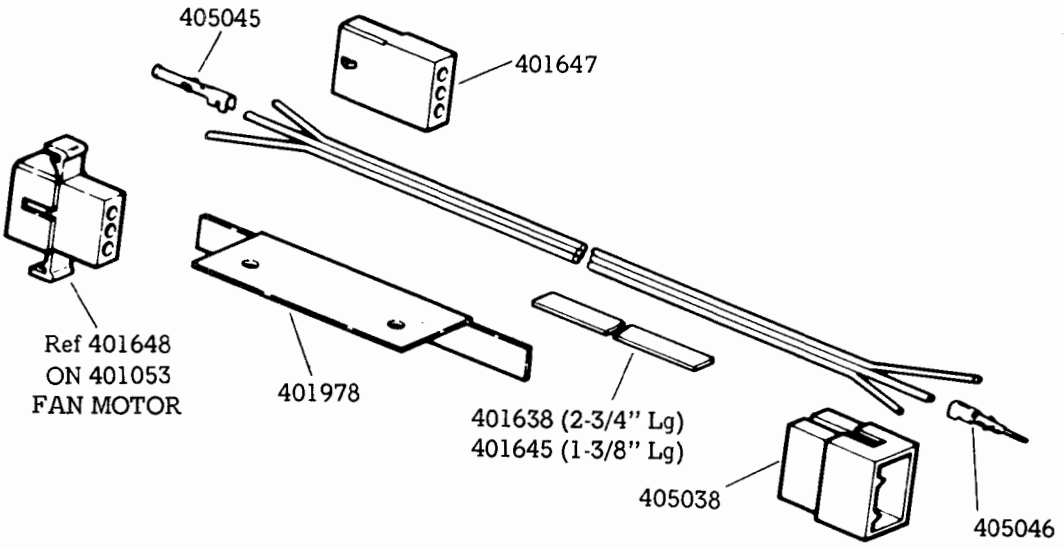

405047 AC Input Cable Assembly -- Logic Under Monitor or Adjacent Logic Cabinet

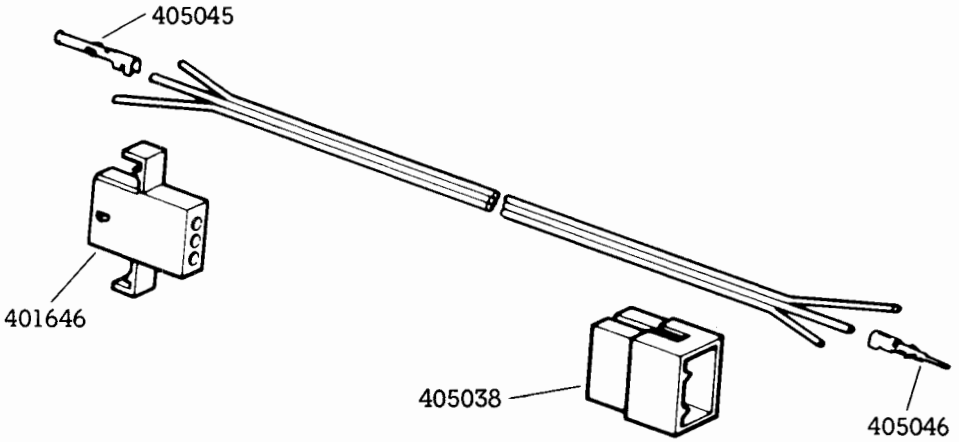

405048 AC Input Cable Assembly -- Adjacent or RO Friction Feed Printer Cabinet and Logic Adjacent

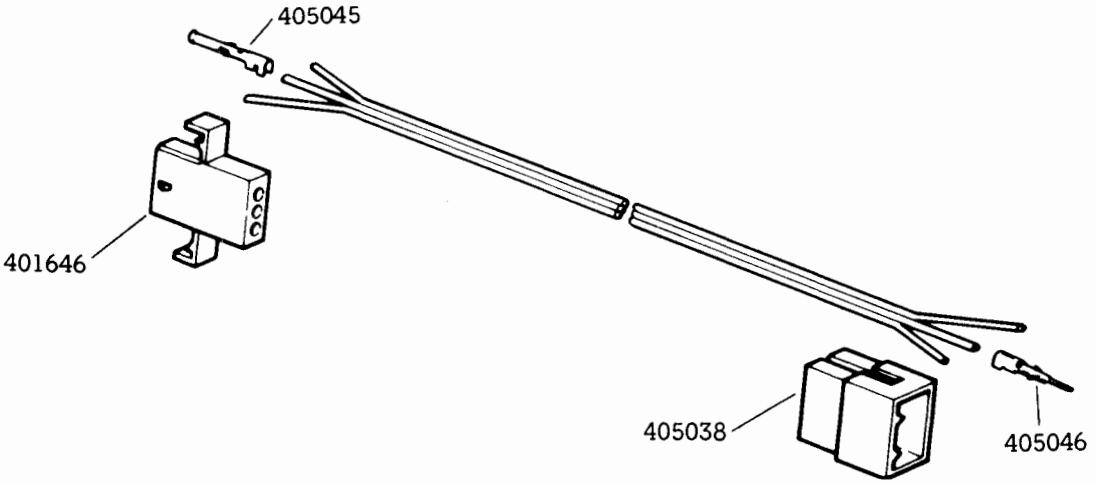

405049 AC Input Cable Assembly -- Printer Under Monitor Cabinet

F. DISASSEMBLY, REASSEMBLY, AND PARTS (Cont)

2. CABINETS, PAPER WINDERS, AND FACILITIES (Cont)

① The 346318 cover (new) cannot be used with the early design 400567 or 400621 assemblies (which contains a 400576 bracket w/filters).

Filter Wiring Information	
Filter	Color
1	R
2	Y
3	G
4	O

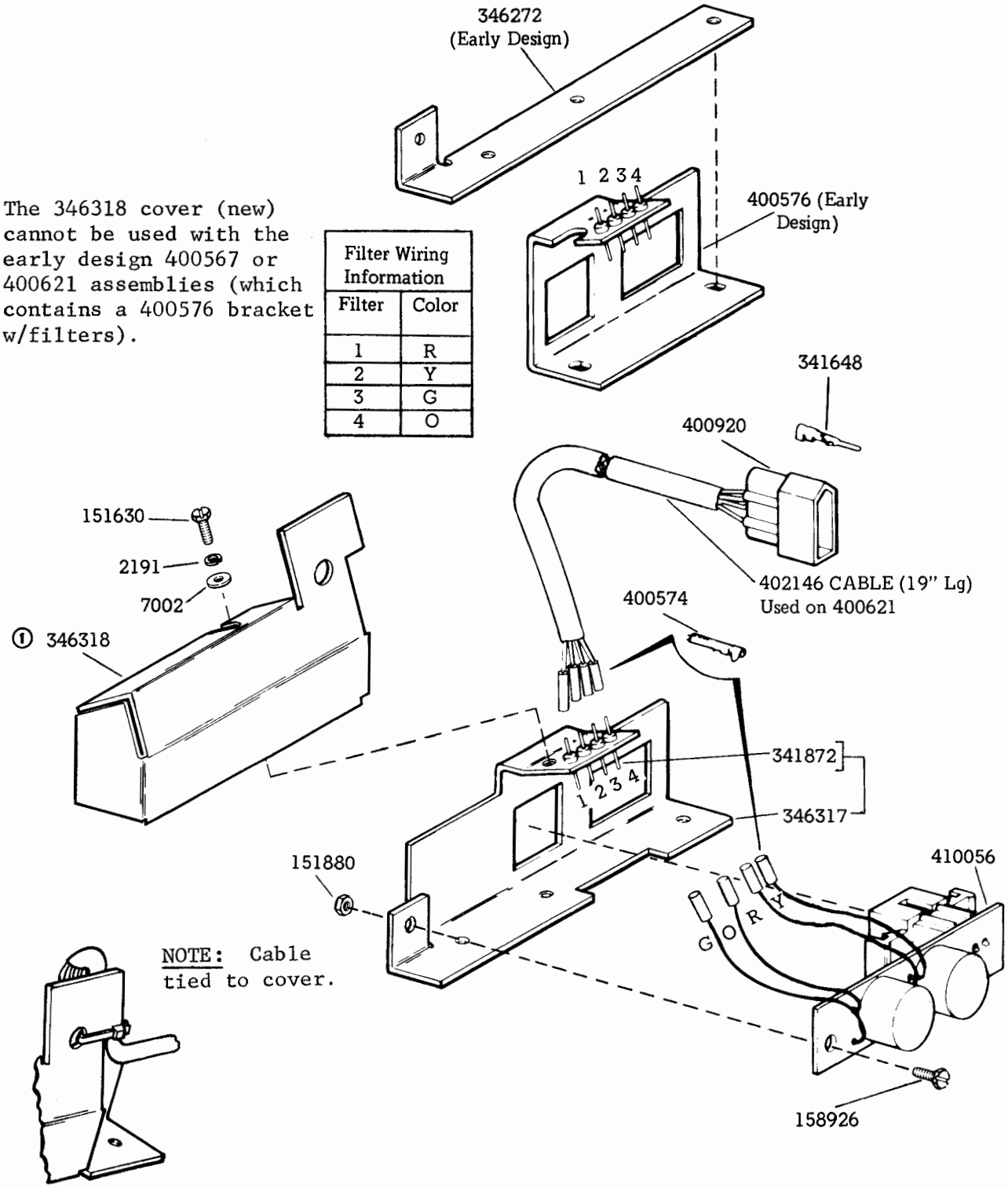

NOTE: Cable tied to cover.

400621 SSI Cable Assembly for Friction Feed Printer Under Monitor Cabinet

RUNNING LIST		
400607 CABLE ASSEMBLY		
FROM CONNECTOR	TO	COLOR
1	1-L	R
2	2-L	Y
3	3-L	G
4	4-L	W-Y
6	5-L	O
7	6-L	BL
8	7-L	W

FILTER WIRING INFORMATION	
FILTER	COLOR
1	R
2	Y
3	G
4	S
5	P
5	O
6	BL
7	W
9	BK

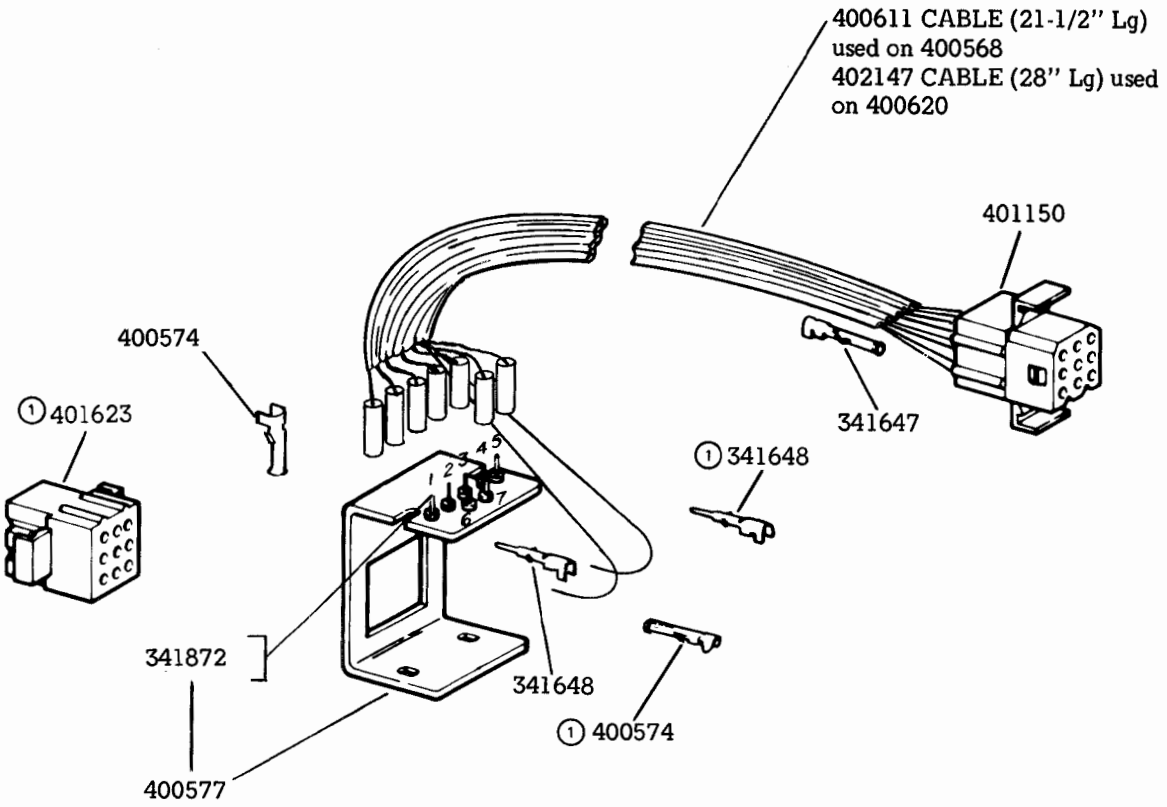

①400607 Cable Assembly

400568 Cable Assembly (Opcon) for RO Friction Feed Printer Cabinet
400620 Cable Assembly (Opcon) for Printer Under Monitor Cabinet

F. DISASSEMBLY, REASSEMBLY, AND PARTS (Cont)

2. CABINETS, PAPER WINDERS, AND FACILITIES (Cont)

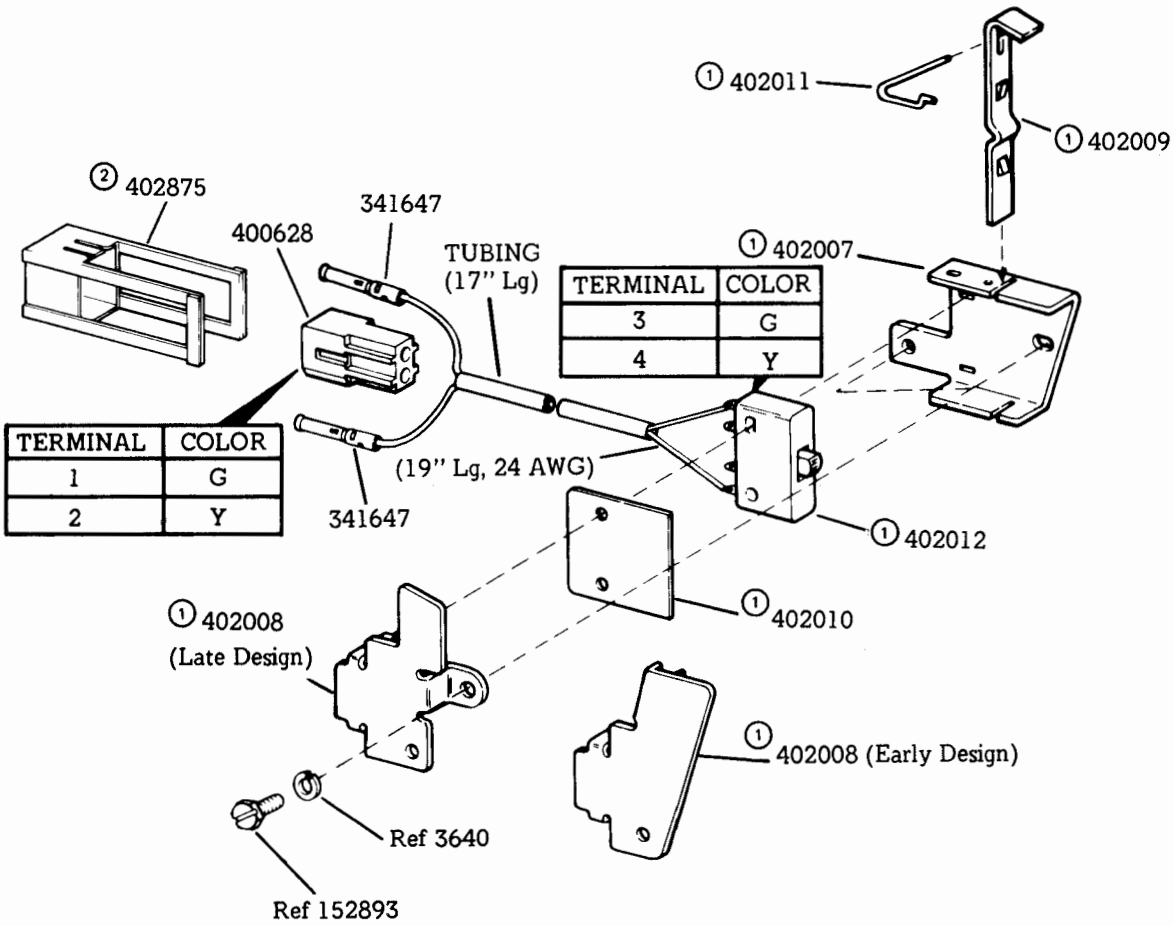

① 400575 Interlock Switch Assembly
② Not Part of 400598

400598 Interlock Cable Assembly for Friction Feed Printer Cabinet

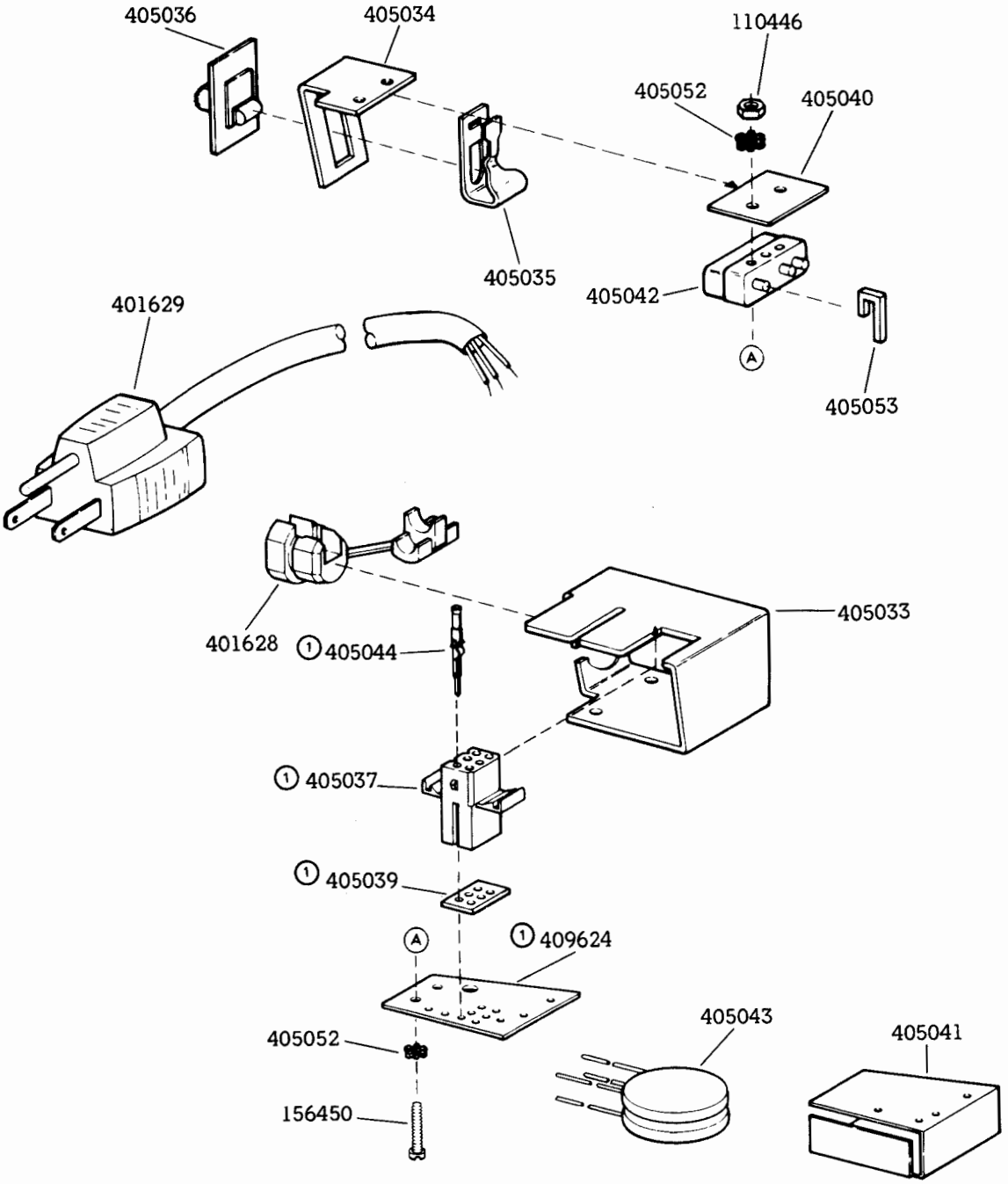

1 410624 Circuit Card Assembly

405050 AC Distribution Assembly (Early Design)

F. DISASSEMBLY, REASSEMBLY, AND PARTS (Cont)

2. CABINETS, PAPER WINDERS, AND FACILITIES (Cont)

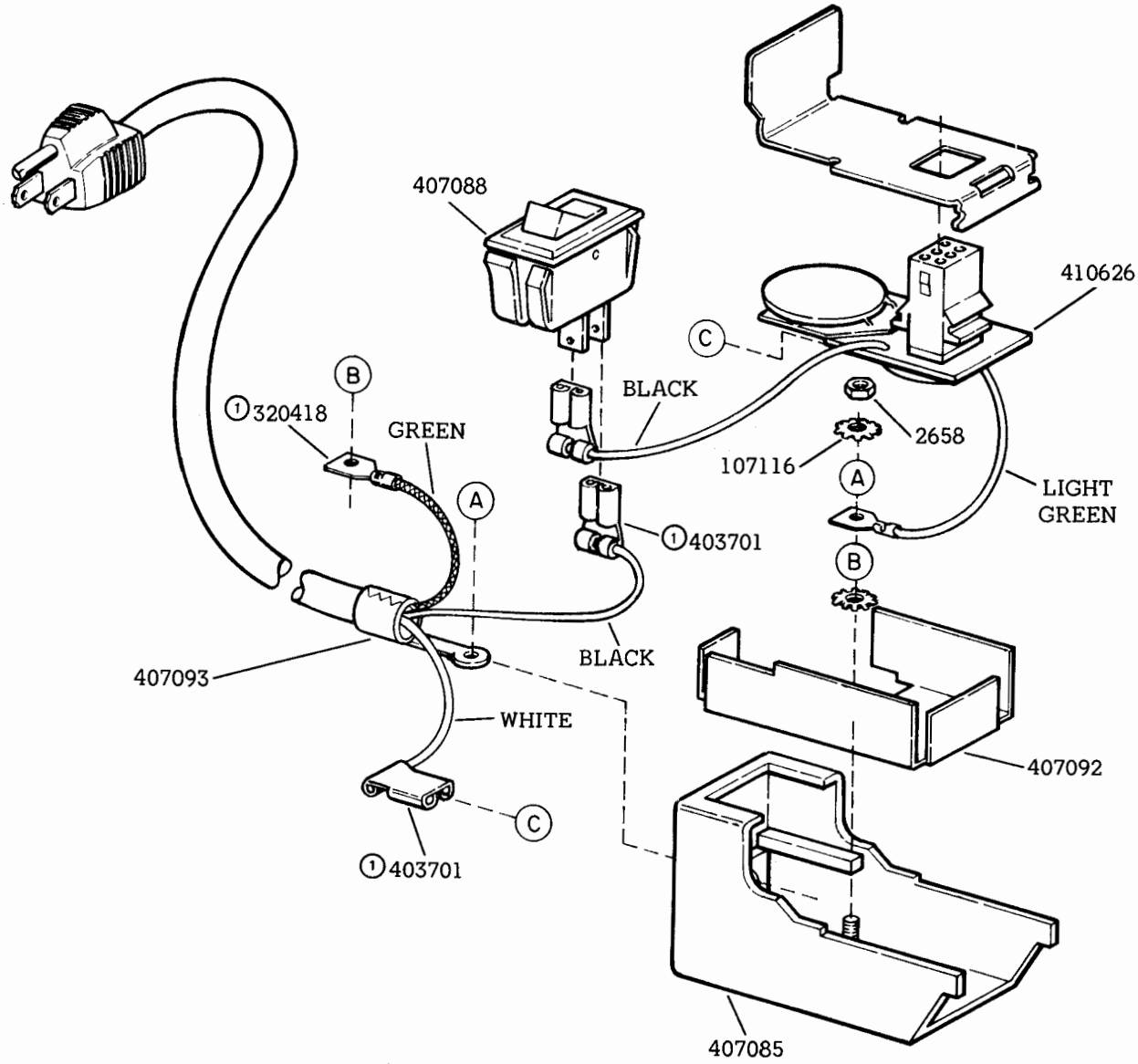

①Part of 407093 Cord Assembly

407090 AC Switch Assembly (Late Design)

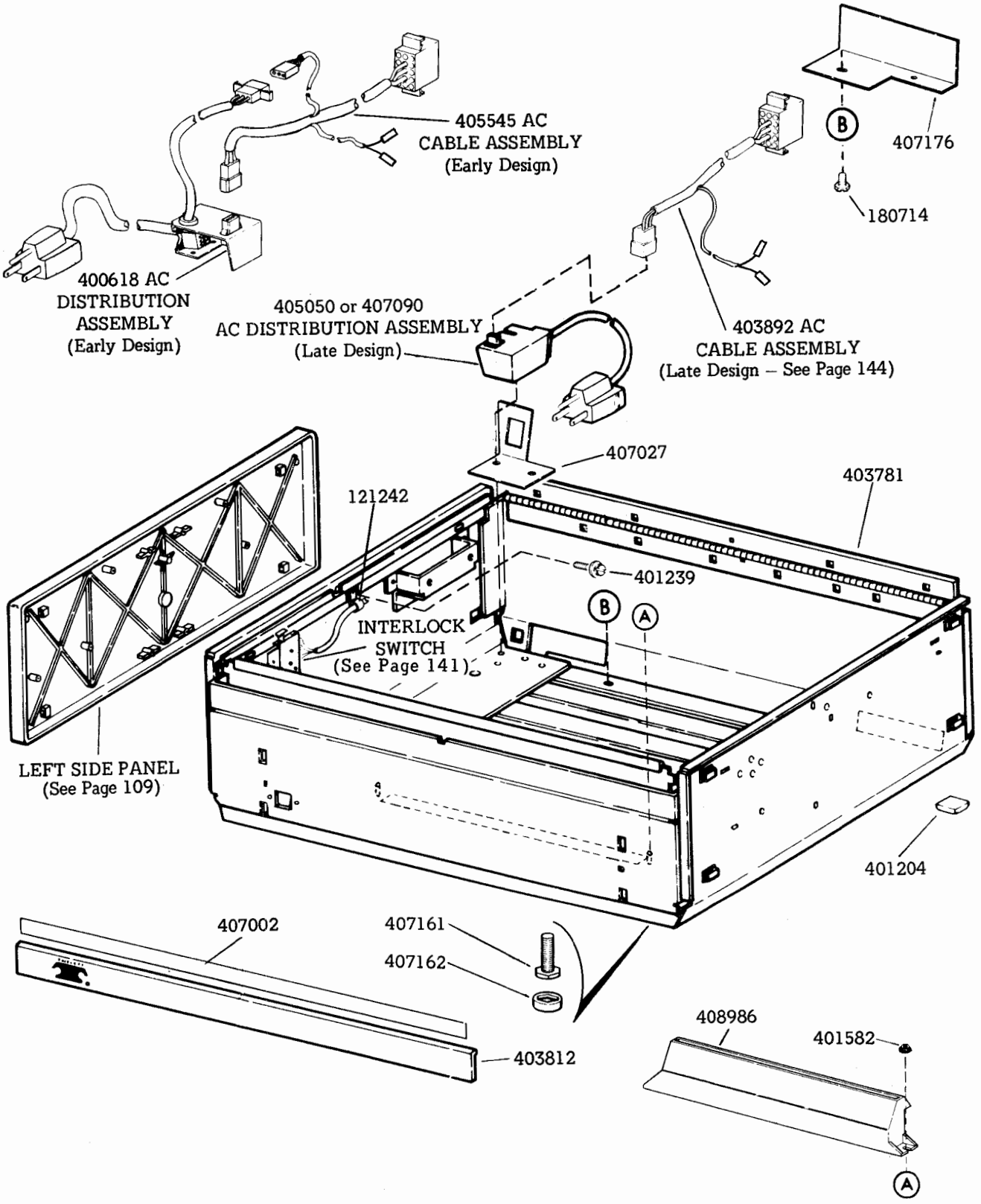

40CAB351/ZZ Printer Cabinet Core for Adjacent or RO Tractor Feed Printer -- 80-Column

F. DISASSEMBLY, REASSEMBLY, AND PARTS (Cont)

2. CABINETS, PAPER WINDERS, AND FACILITIES (Cont)

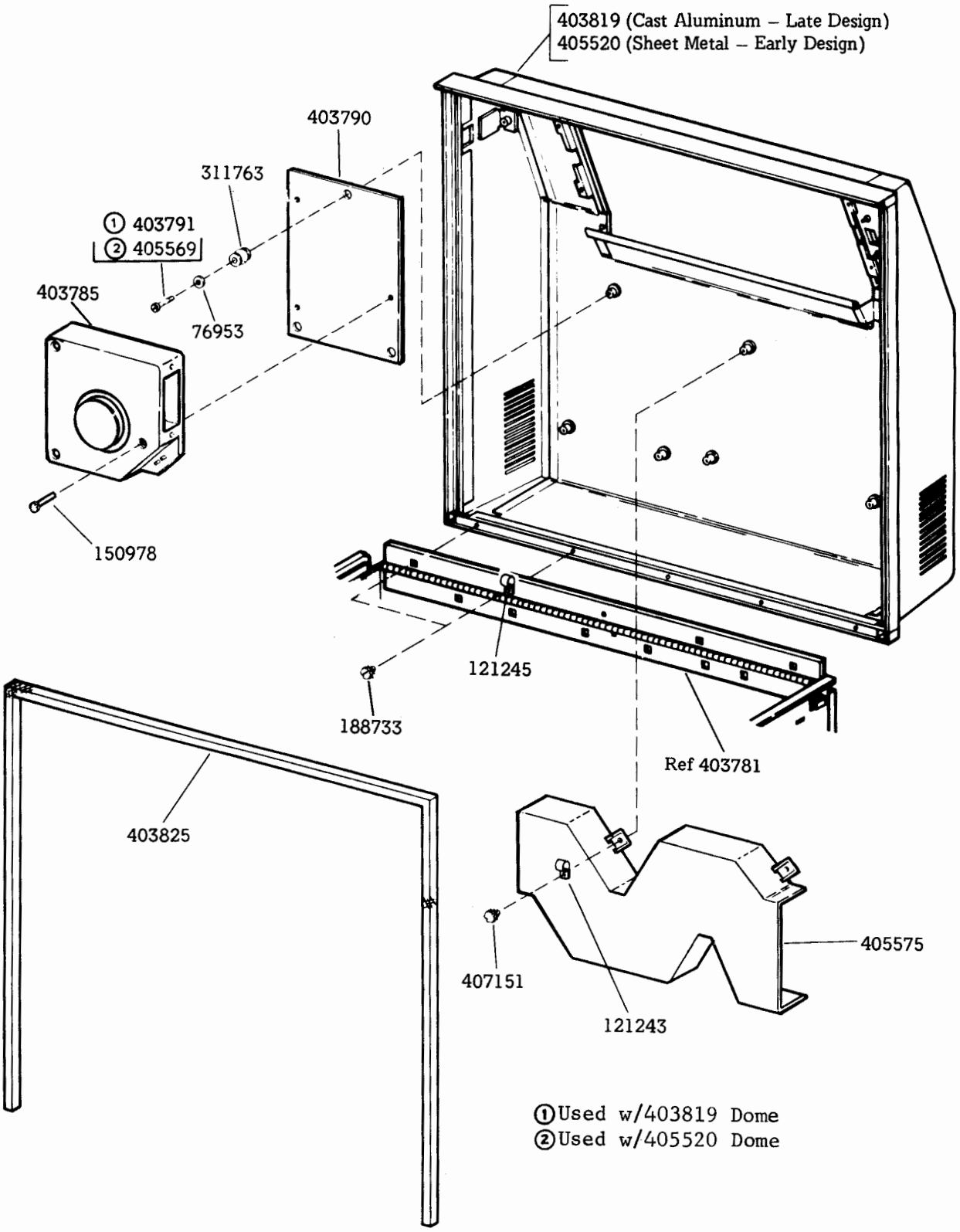

①Used w/403819 Dome
②Used w/405520 Dome

40CAB351/ZZ Printer Cabinet Core for Adjacent or RO Tractor Feed Printer -- 80-Column (Cont)

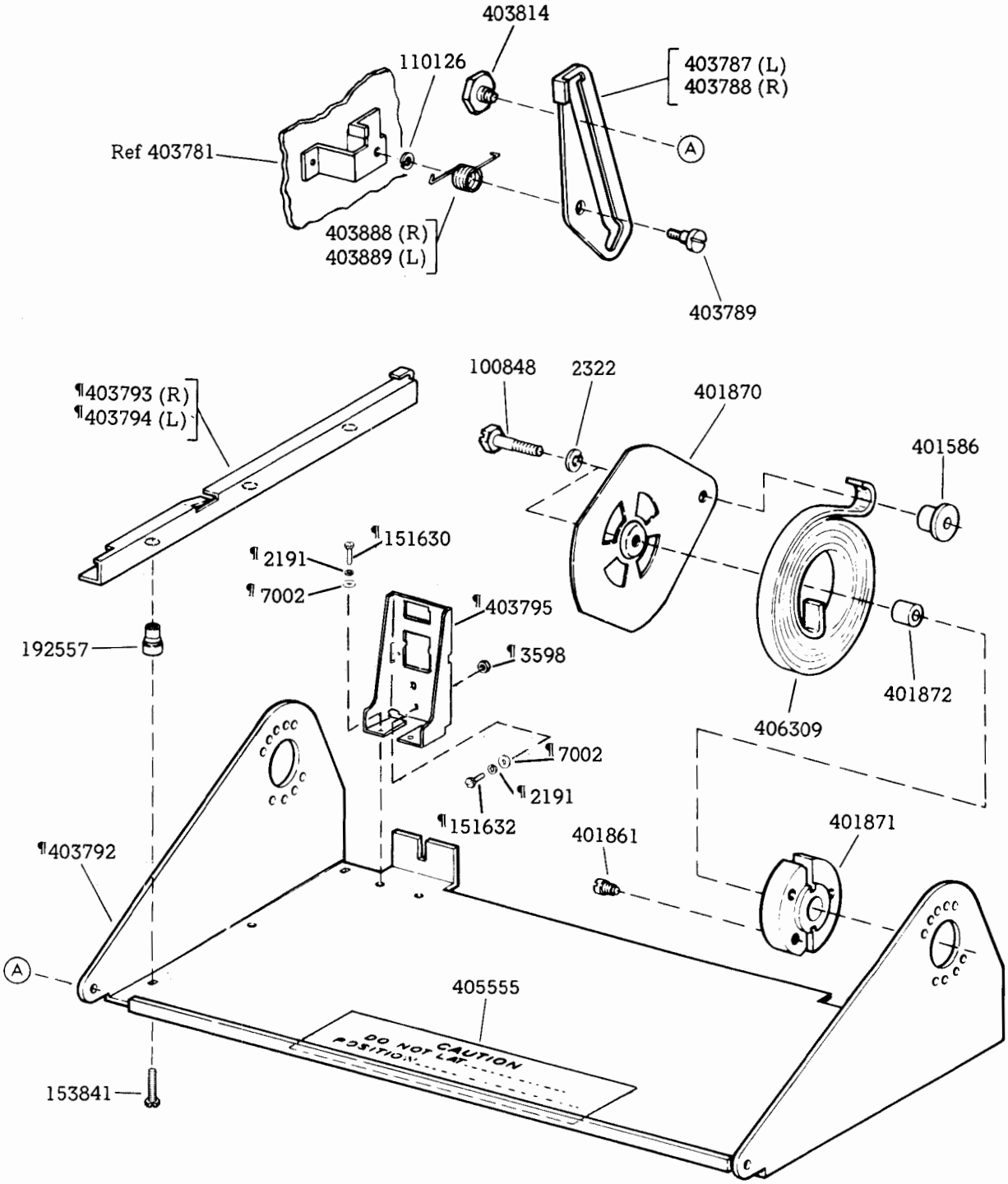

¶Early design. For late design parts, see Page 143.

40CAB351/ZZ Printer Cabinet Core for Adjacent or RO Tractor Feed Printer -- 80-Column (Cont)

F. DISASSEMBLY, REASSEMBLY, AND PARTS (Cont)

2. CABINETS, PAPER WINDERS, AND FACILITIES (Cont)

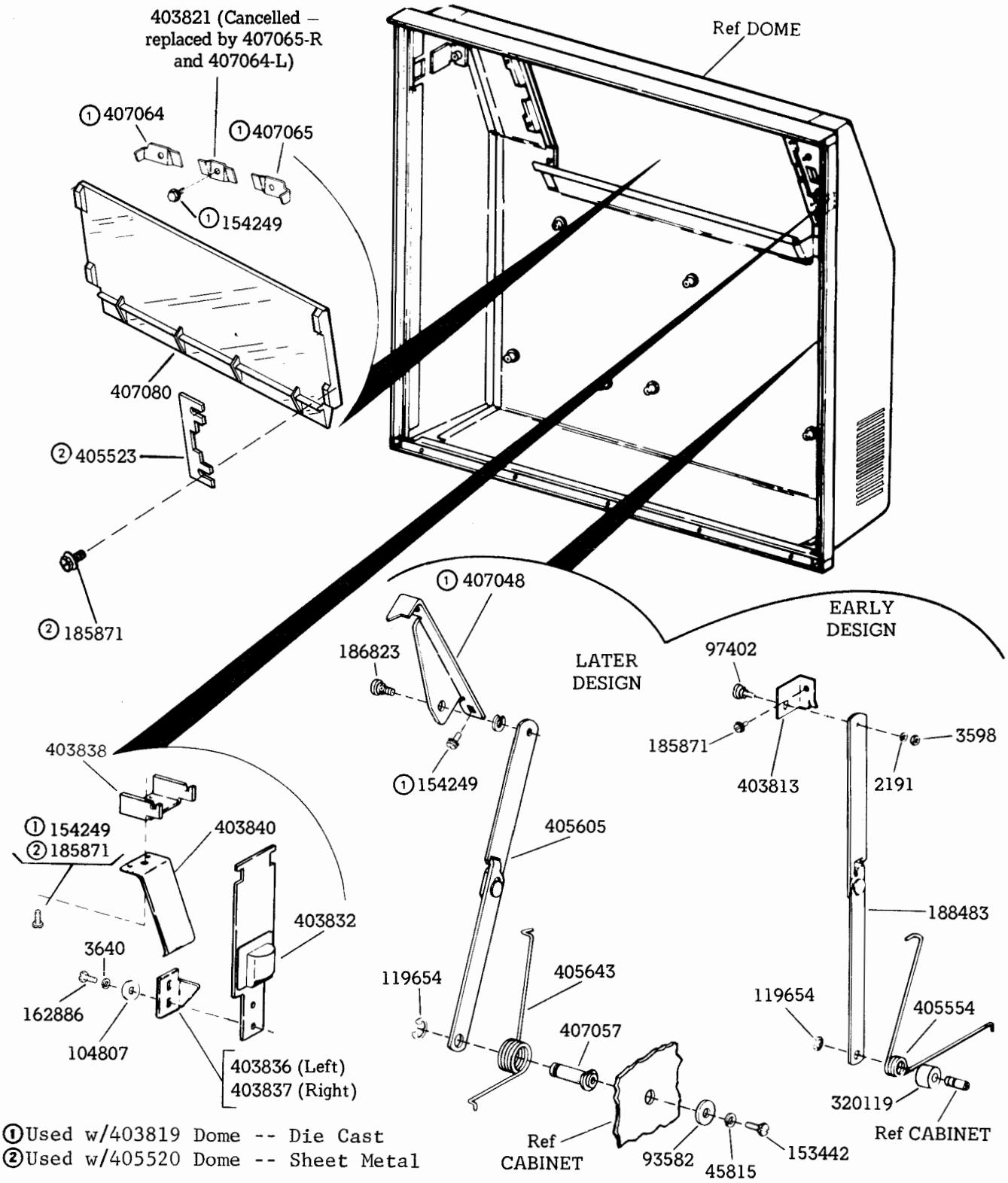

①Used w/403819 Dome -- Die Cast
②Used w/405520 Dome -- Sheet Metal

40CAB351/ZZ Printer Cabinet Core for Adjacent or RO Tractor Feed Printer -- 80-Column (Cont)

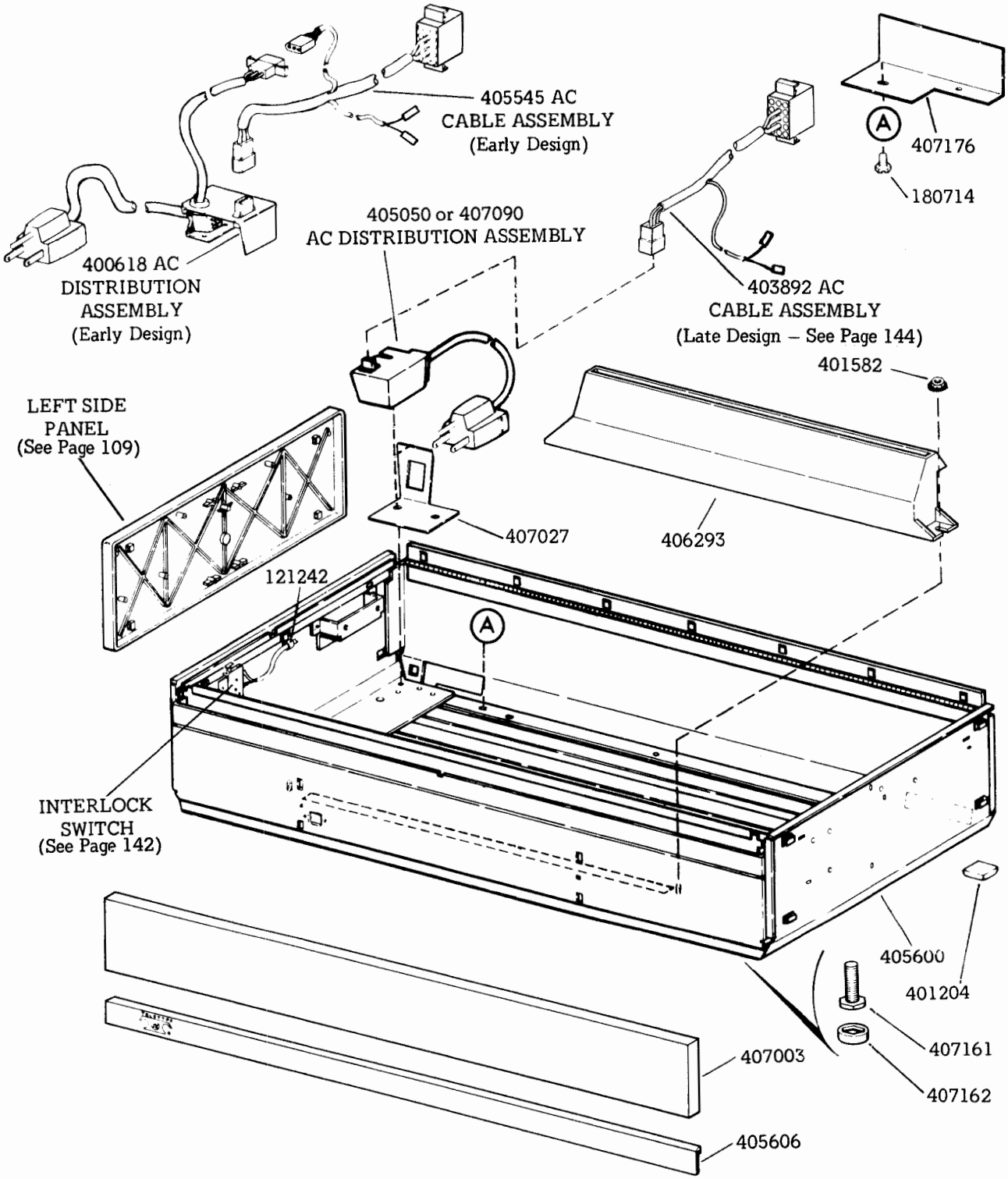

40CAB353/ZZ Printer Cabinet Core for Adjacent or RO
Tractor Feed Printer -- 132-Column

F. DISASSEMBLY, REASSEMBLY, AND PARTS (Cont)

2. CABINETS, PAPER WINDERS, AND FACILITIES (Cont)

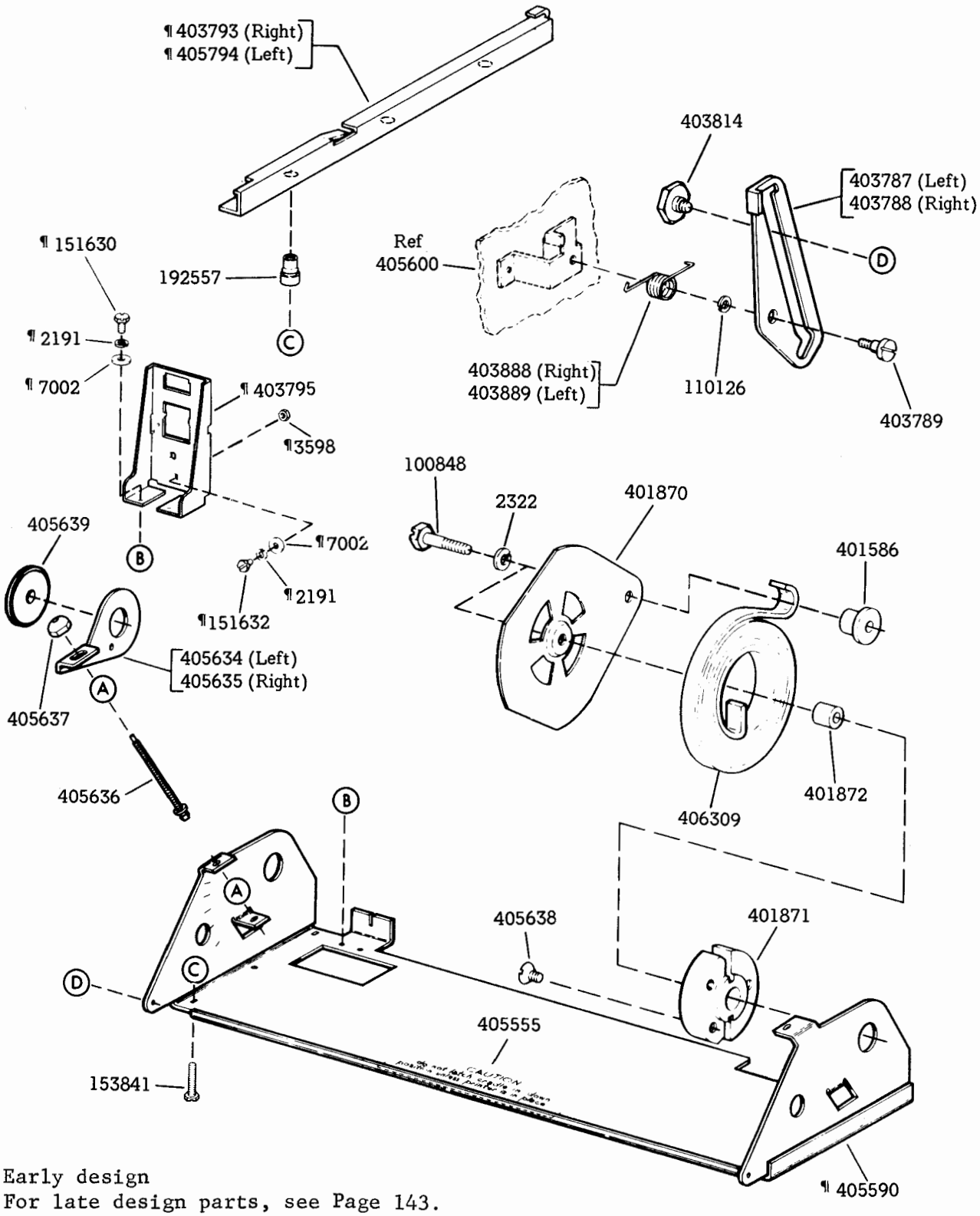

¶Early design

For late design parts, see Page 143.

40CAB353/ZZ Printer Cabinet Core for Adjacent or RO
Tractor Feed Printer -- 132-Column (Cont)

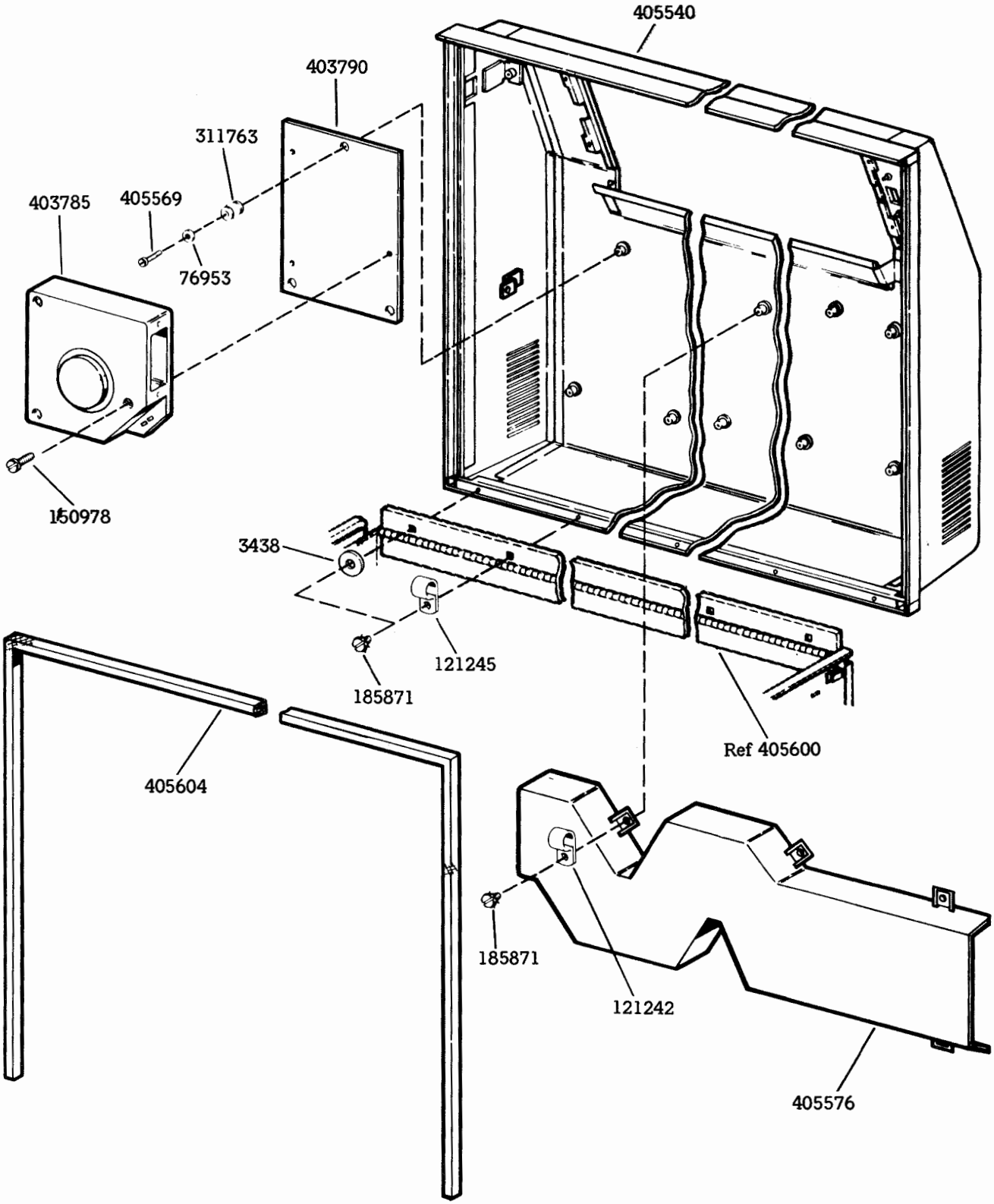

40CAB353/ZZ Printer Cabinet Core for Adjacent or RO
Tractor Feed Printer -- 132-Column (Cont)

F. DISASSEMBLY, REASSEMBLY, AND PARTS (Cont)

2. CABINETS, PAPER WINDERS, AND FACILITIES (Cont)

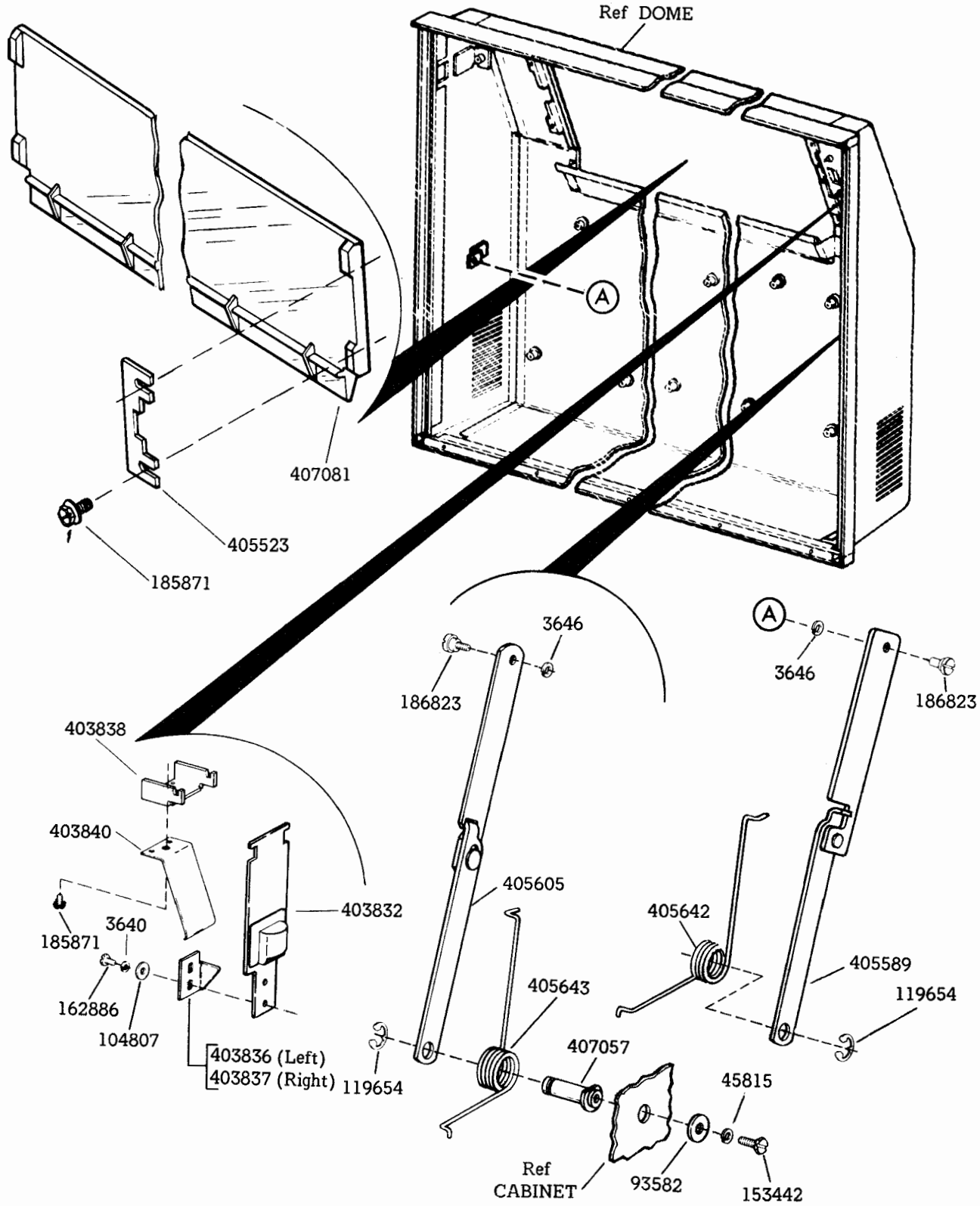

40CAB353/ZZ Printer Cabinet Core for Adjacent or RO
Tractor Feed Printer -- 132-Column (Cont)

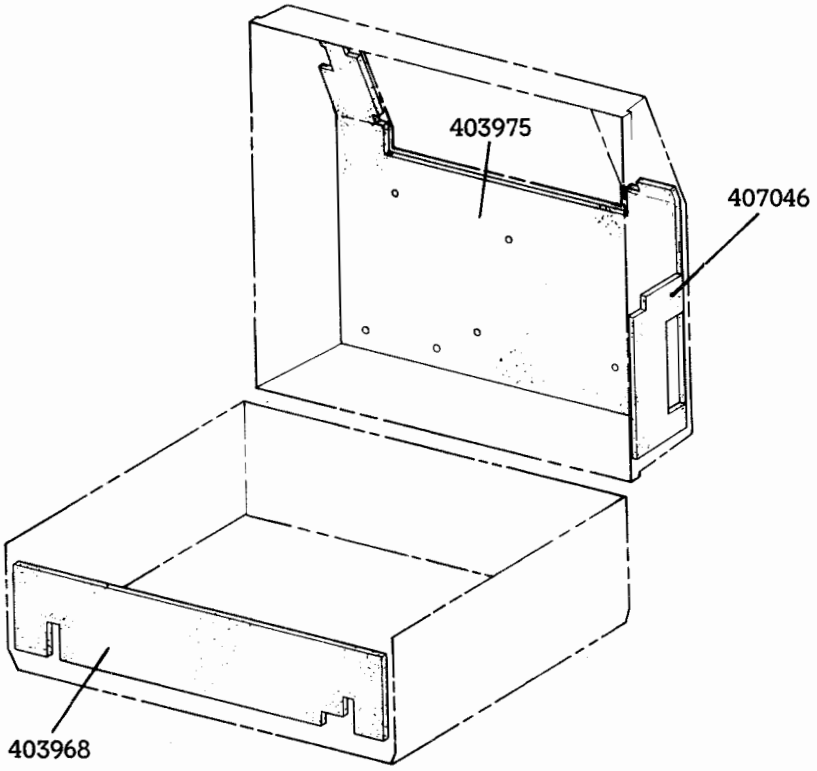

Pads Used on 40CAB351/ZZ Printer Cabinet Core for Adjacent or RO Tractor Feed Printer -- 80-Column

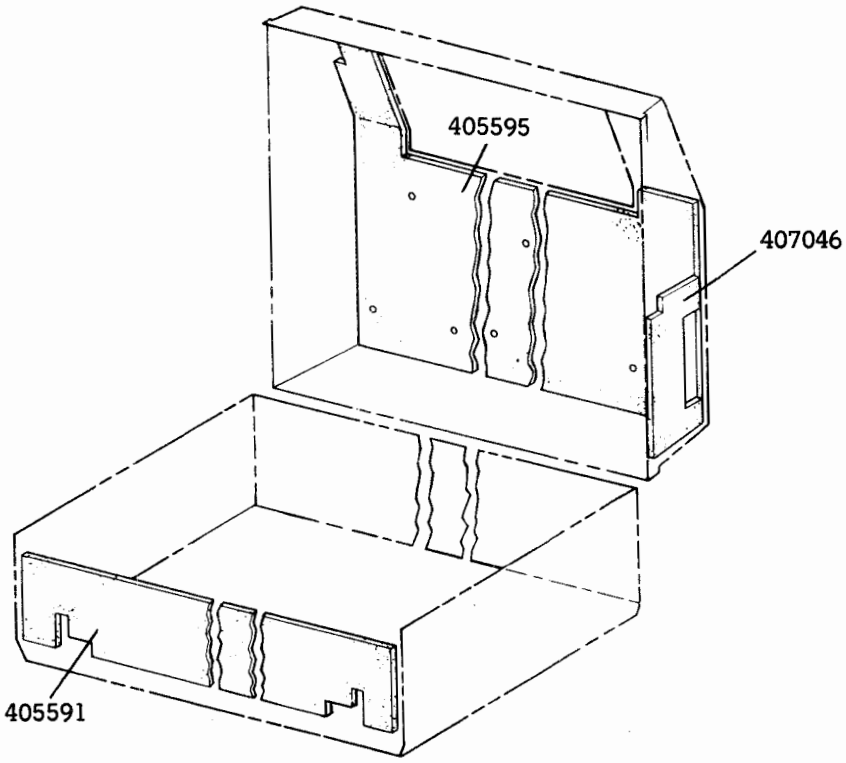

Pads Used on 40CAB353/ZZ Printer Cabinet Core for Adjacent or RO Tractor Feed Printer -- 132-Column

F. DISASSEMBLY, REASSEMBLY, AND PARTS (Cont)

2. CABINETS, PAPER WINDERS, AND FACILITIES (Cont)

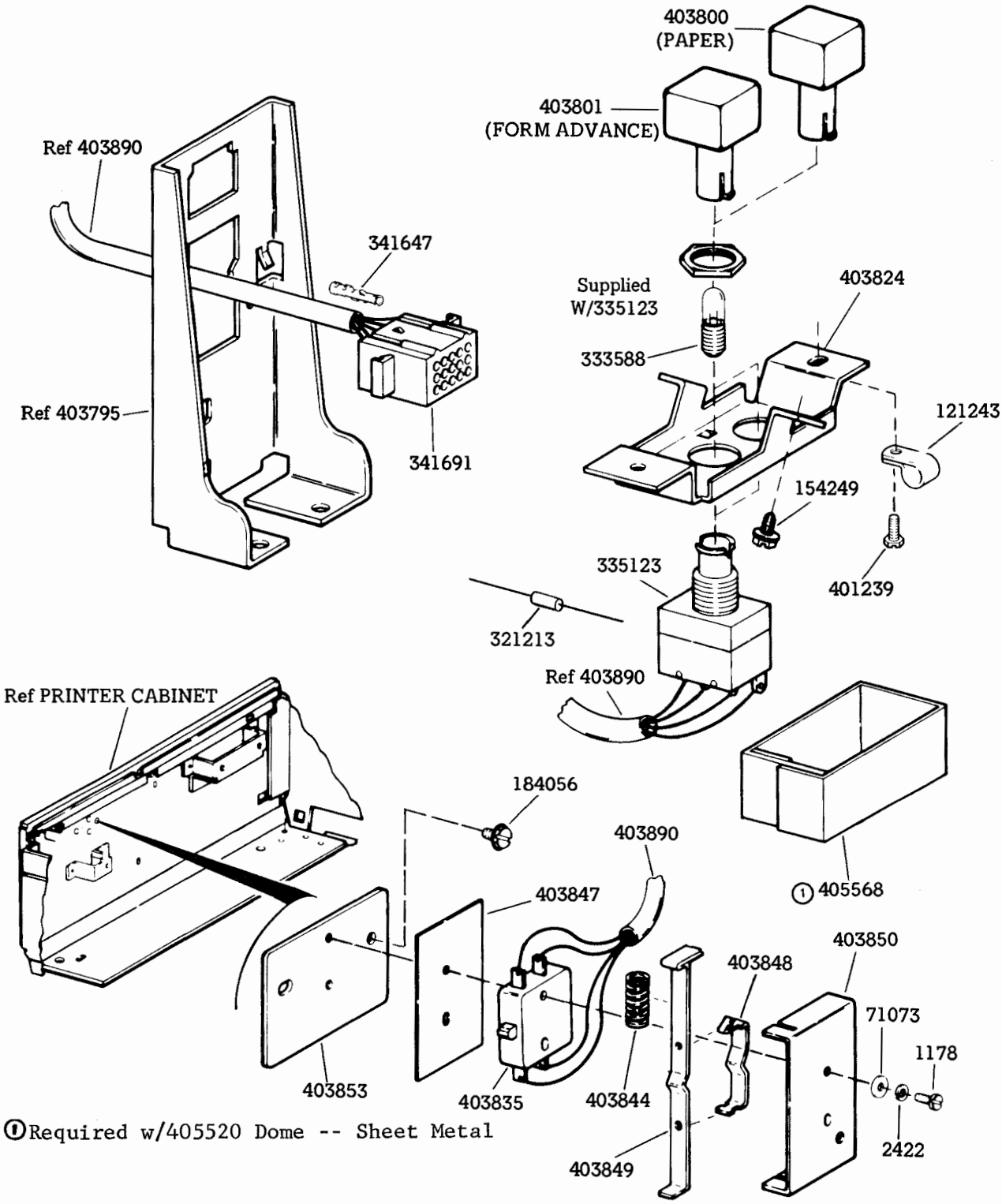

① Required w/405520 Dome -- Sheet Metal

Interlock and Paper Alarm for 80- and 132-Column Tractor Feed Printer Cabinets

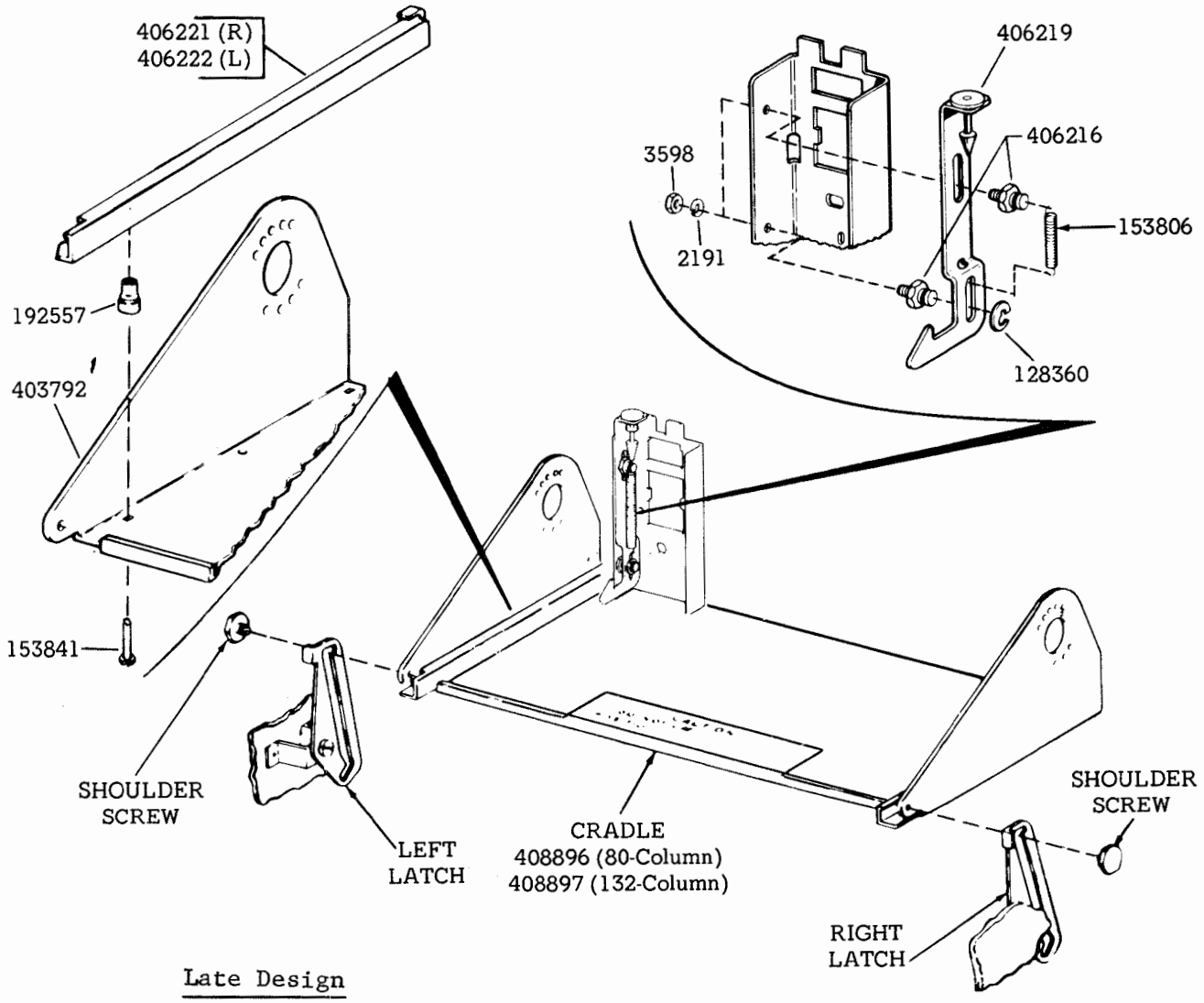

Cradle and Latch Mechanism for Adjacent or RO Tractor Feed Printer

F. DISASSEMBLY, REASSEMBLY, AND PARTS (Cont)

2. CABINETS, PAPER WINDERS, AND FACILITIES (Cont)

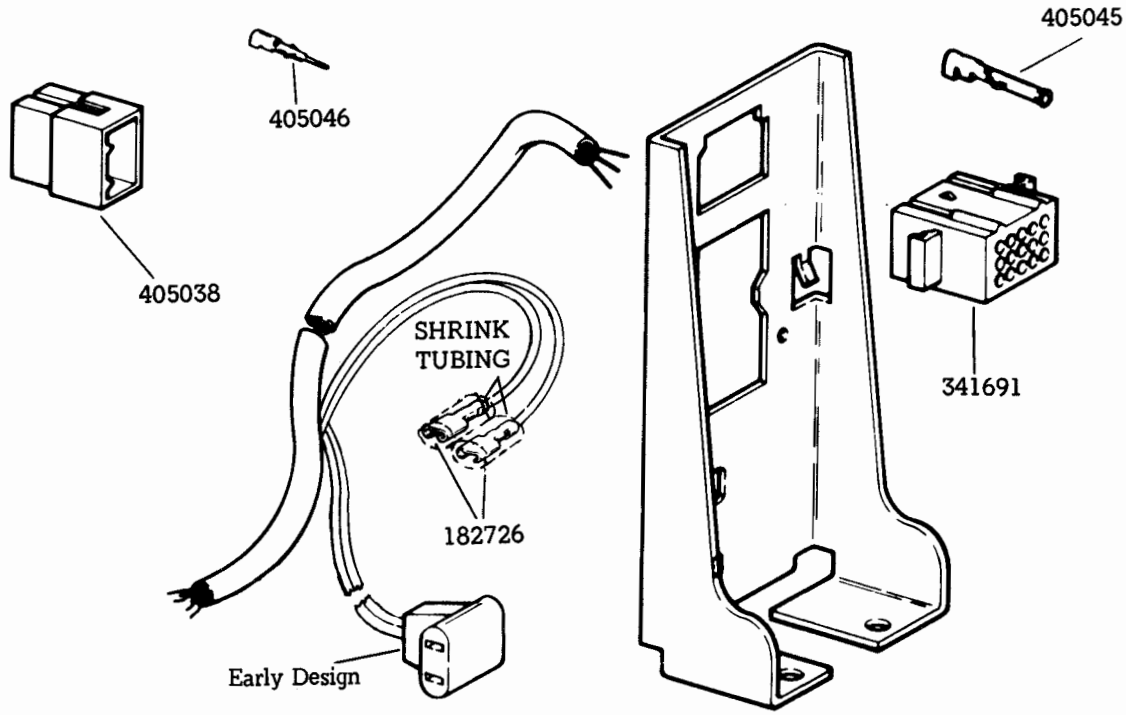

403892 AC Cable Assembly -- Tractor Feed Printer Cabinet

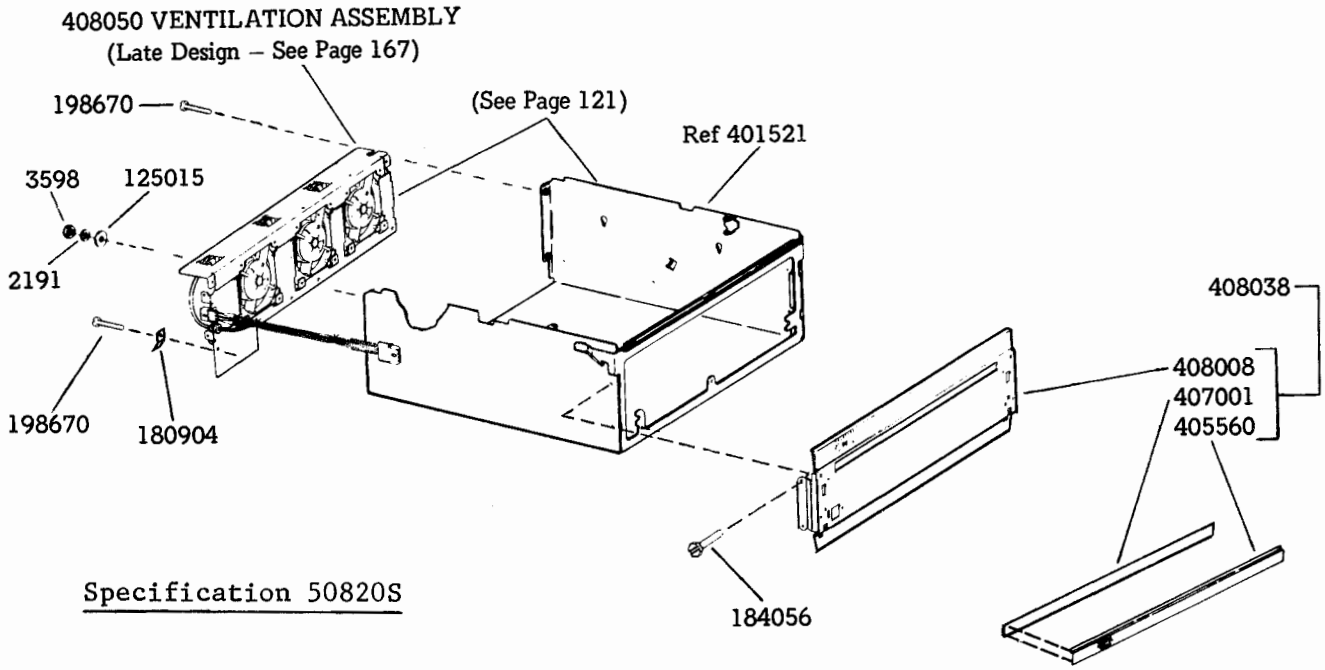

Specification 50820S

408051 Modification Kit to Provide Logic Under Monitor Cabinet With Late Design Ventilation Assembly

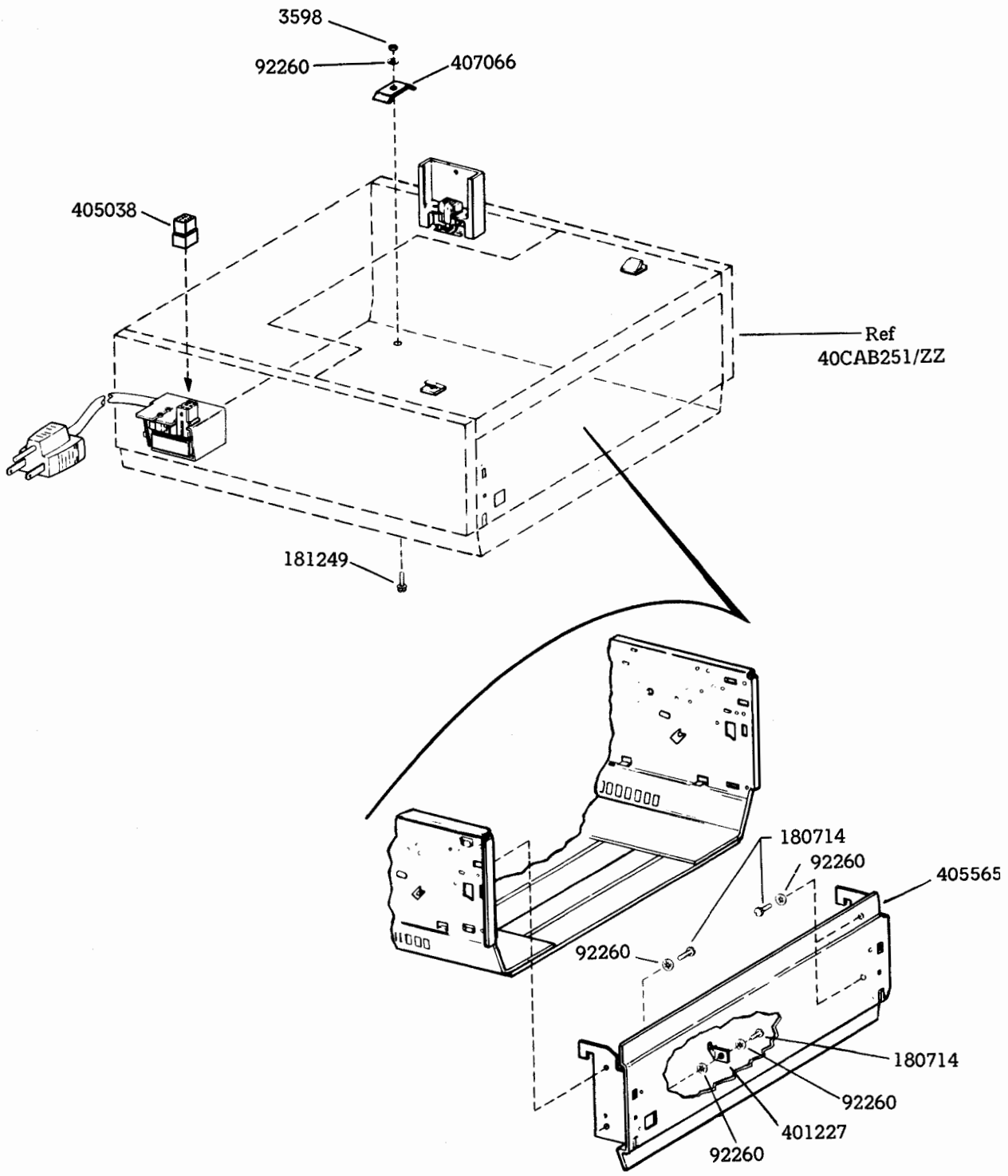

Specification 50830S

405562 Modification Kit for Monitor/Opcon Support Cabinet

F. DISASSEMBLY, REASSEMBLY, AND PARTS (Cont)

2. CABINETS, PAPER WINDERS, AND FACILITIES (Cont)

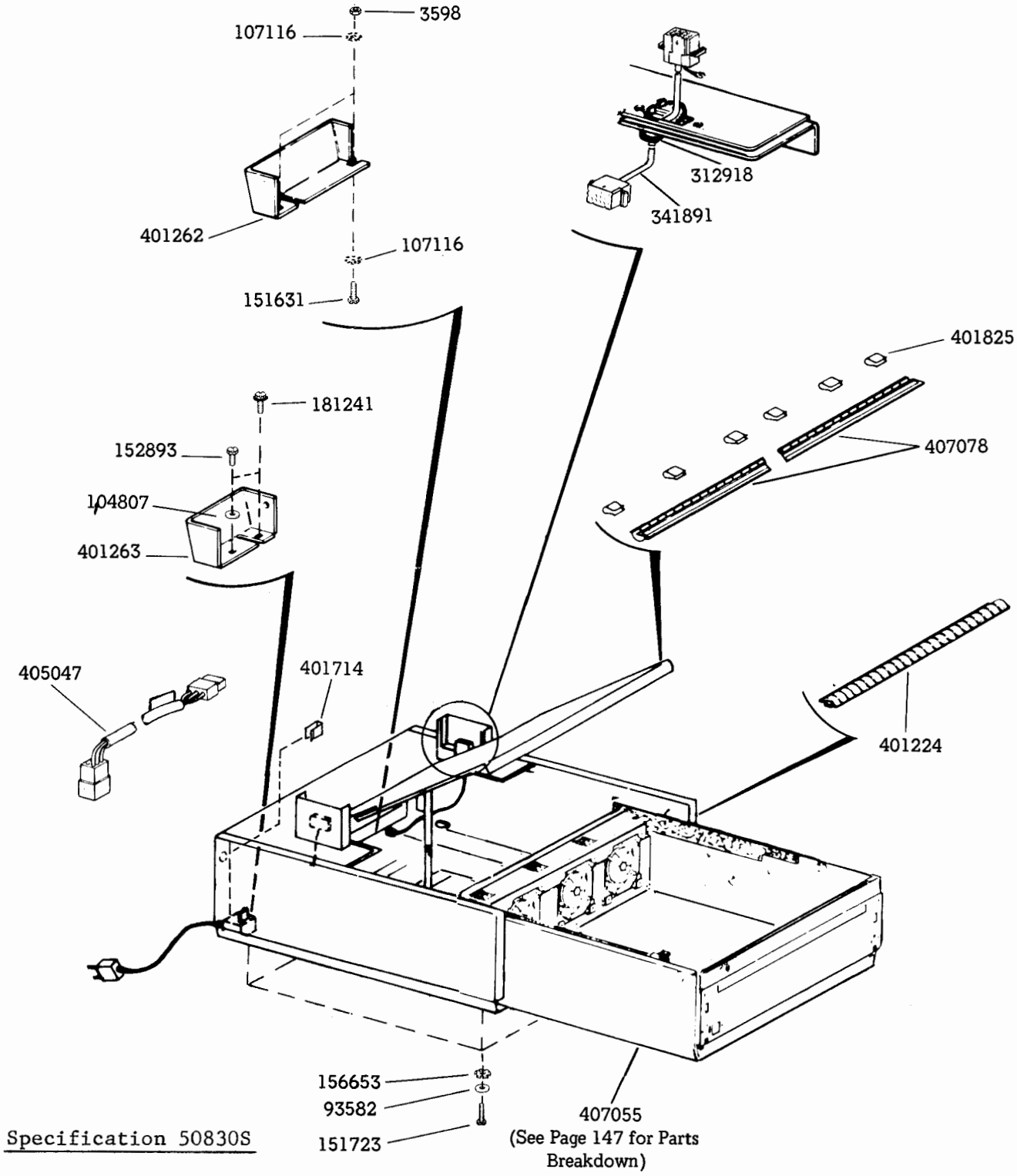

Specification 50830S

405563 Modification Kit Used on 40CAB251/ZZ Cabinet to Form a 40CAB251/AB Cabinet

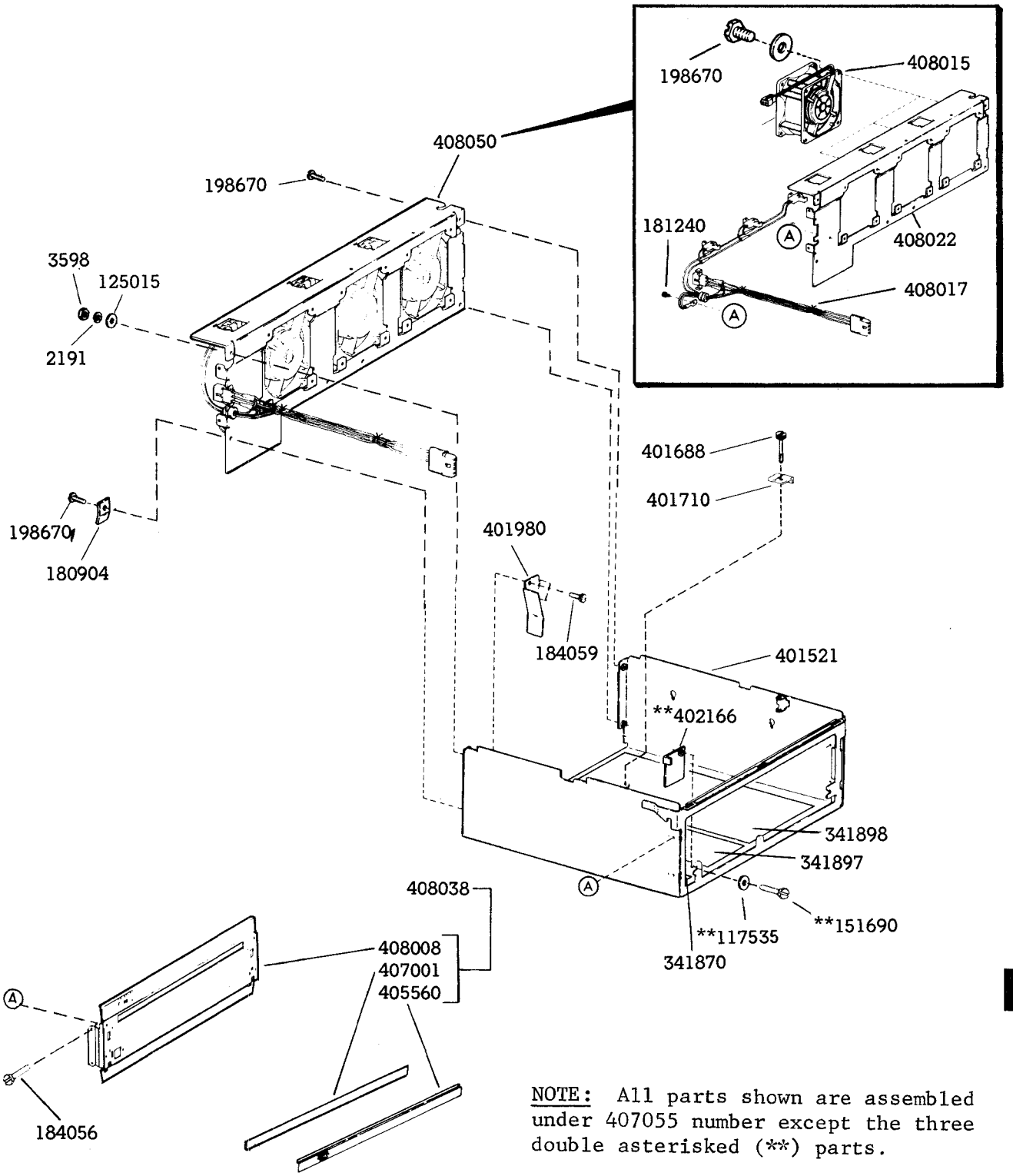

NOTE: All parts shown are assembled under 407055 number except the three double asterisked (**) parts.

405563 Modification Kit Used on 40CAB251/ZZ Cabinet to Form a 40CAB251/AB Cabinet (Cont)

F. DISASSEMBLY, REASSEMBLY, AND PARTS (Cont)

2. CABINETS, PAPER WINDERS, AND FACILITIES (Cont)

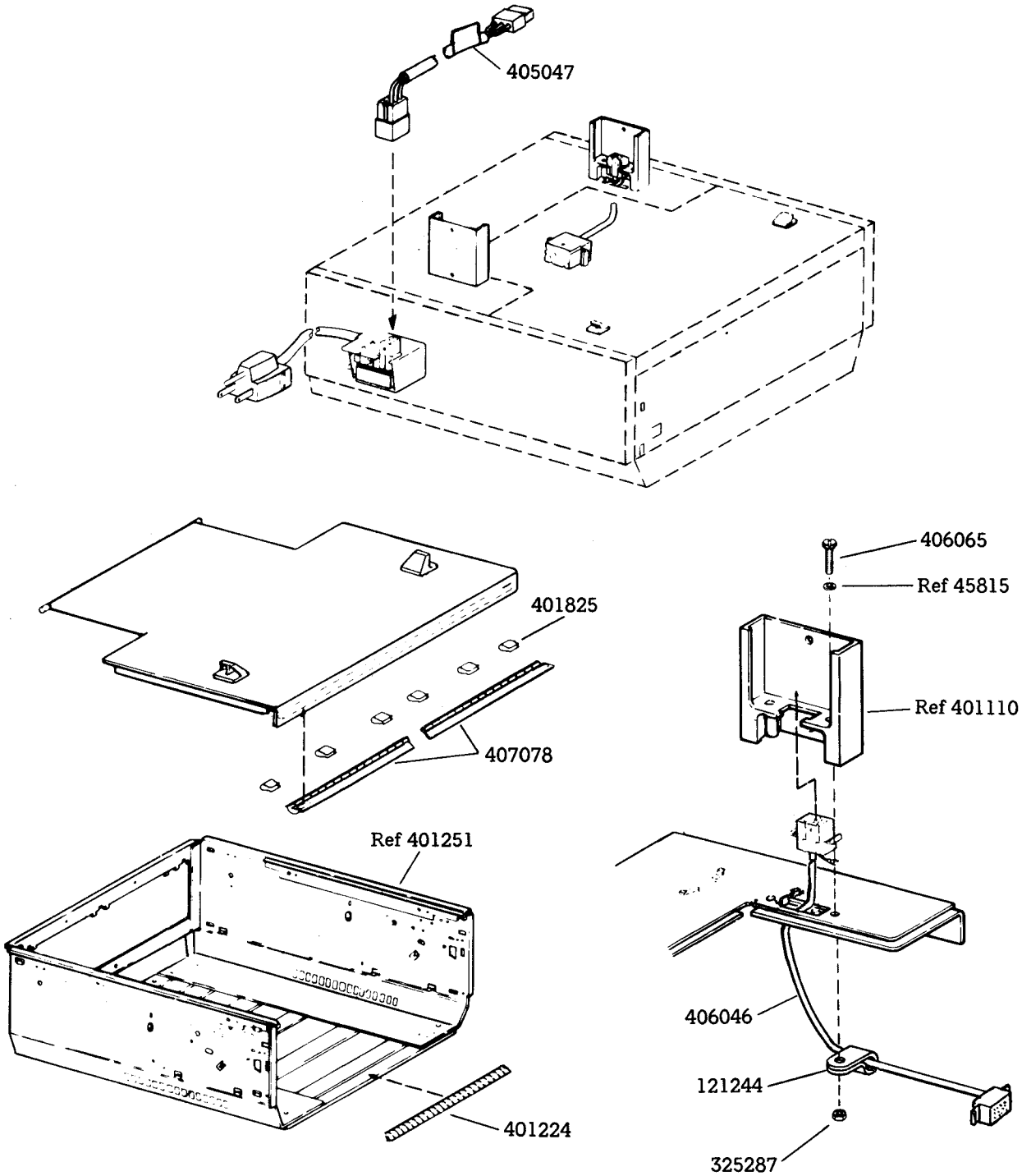

Specification 50830S

406047 Modification Kit Used on 40CAB251/ZZ Cabinet
to Form a 40CAB251/AE Cabinet

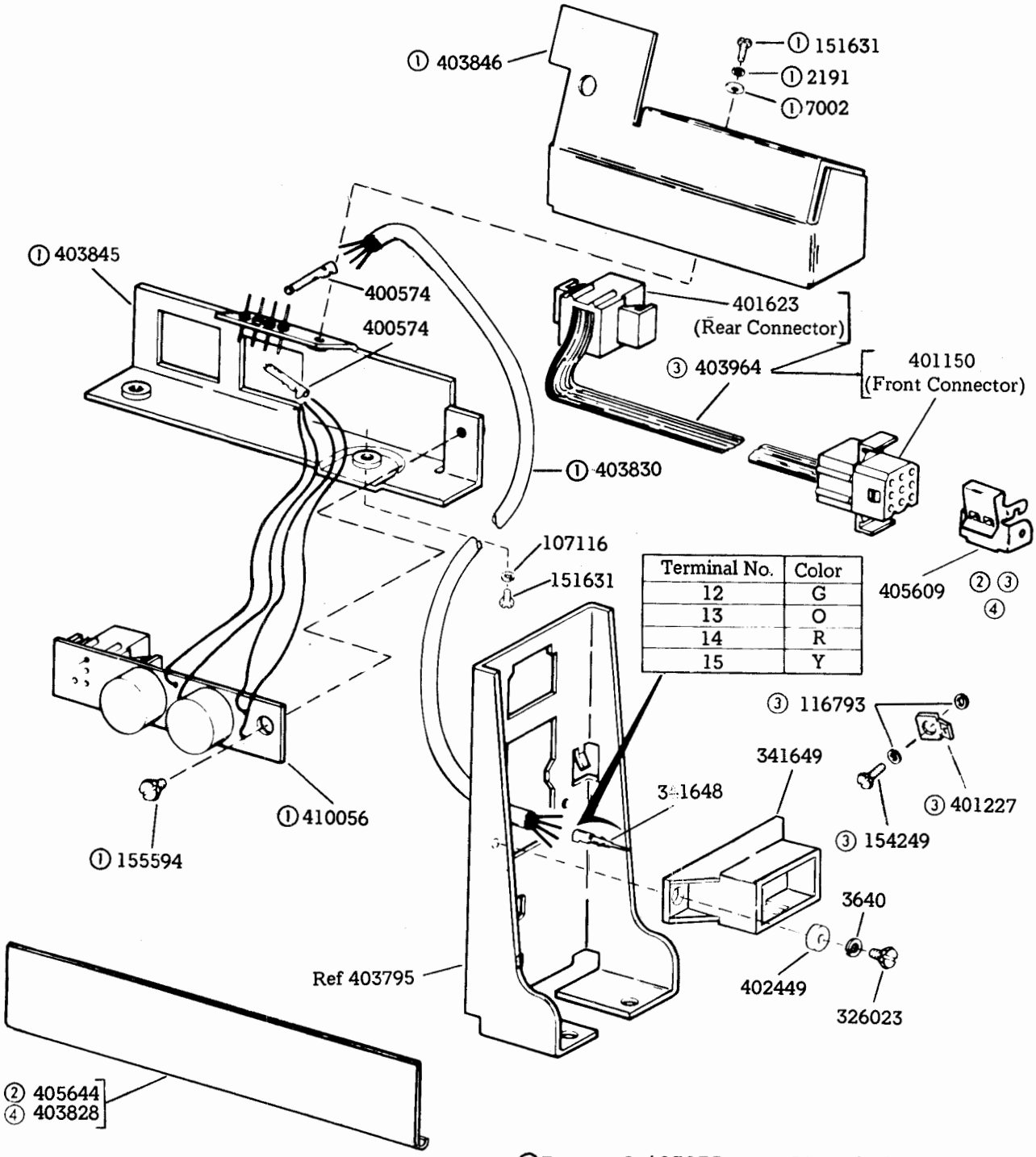

Terminal No.	Color
12	G
13	O
14	R
15	Y

①Part of 407075 SSI Signal Input Assembly
②Part of 405671
③Part of 407025
④Part of 407026

Specification 50829S

405671 (40CAB353/ZZ -- 132-Column), 407025 (40CAB35[illegible]/ZZ -- 80-Column) and 407026 (40CAB351/ZZ -- 80-Column) Modification Kits

F. DISASSEMBLY, REASSEMBLY, AND PARTS (Cont)

2. CABINETS, PAPER WINDERS, AND FACILITIES (Cont)

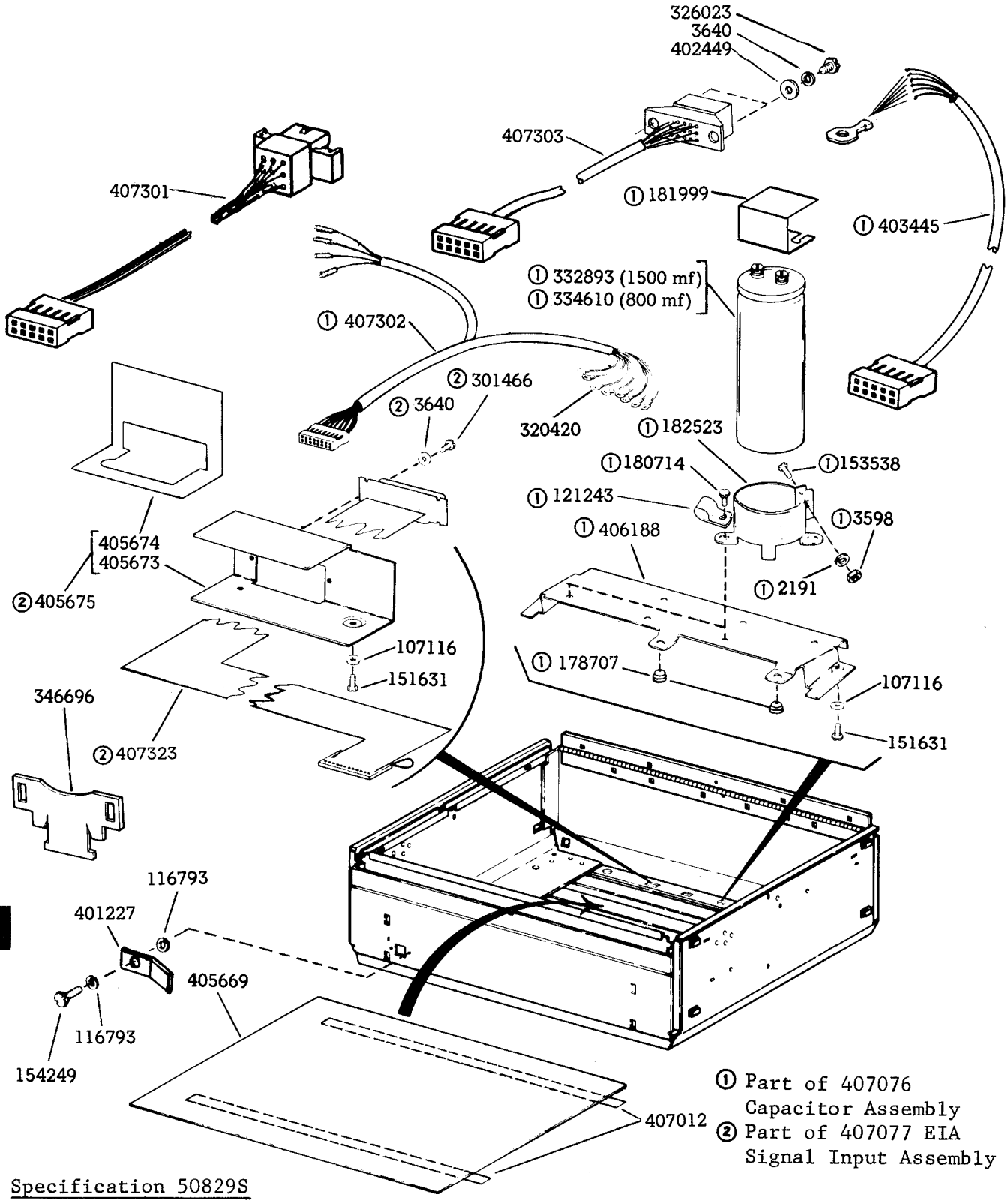

Specification 50829S

407024 EIA Integrated Controller Modification Kit for 40CAB351/ZZ (80-Column) and 40CAB353/ZZ (132-Column) Cabinets

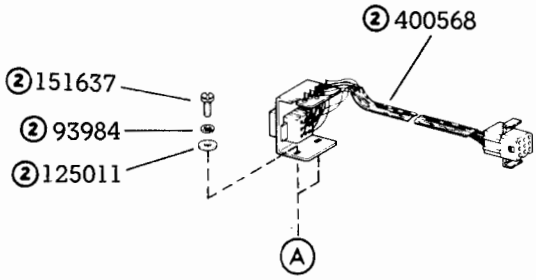

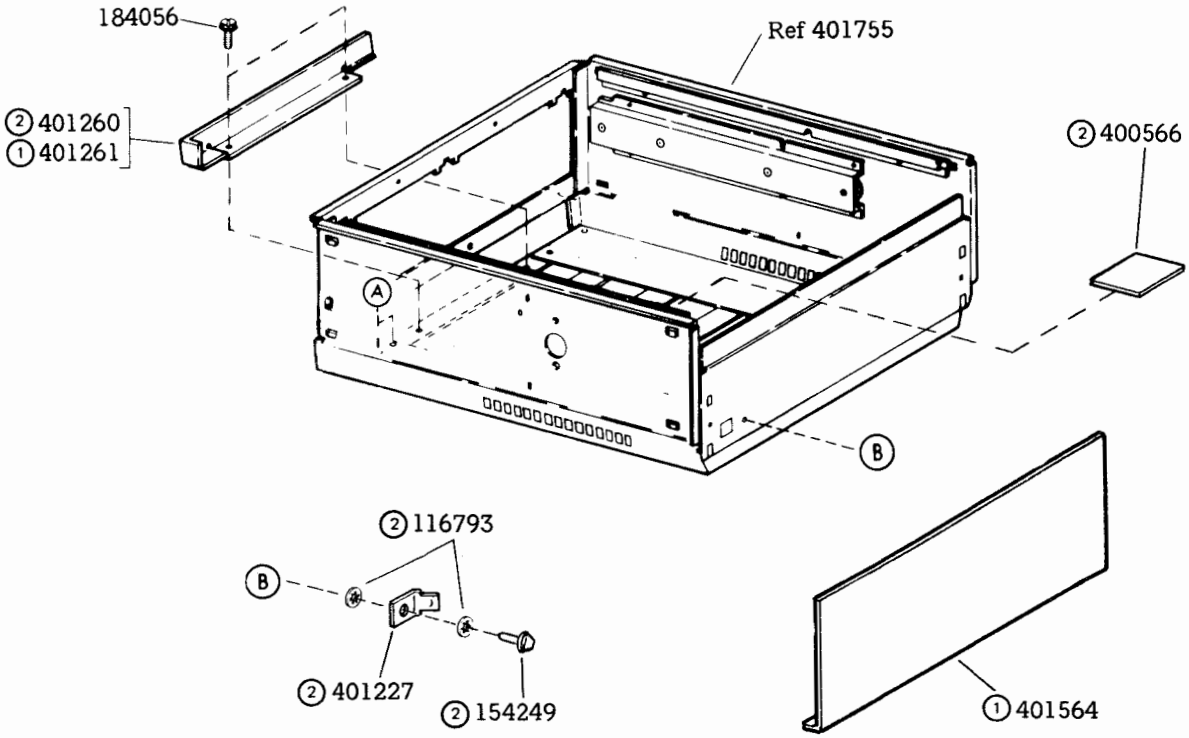

Specification 50828S

①Part of 407042
②Part of 407043

407042 Modification Kit for Adjacent Friction Feed Printer Cabinet and
407043 Modification Kit for RO Friction Feed Printer Cabinet

F. DISASSEMBLY, REASSEMBLY, AND PARTS (Cont)

2. CABINETS, PAPER WINDERS, AND FACILITIES (Cont)

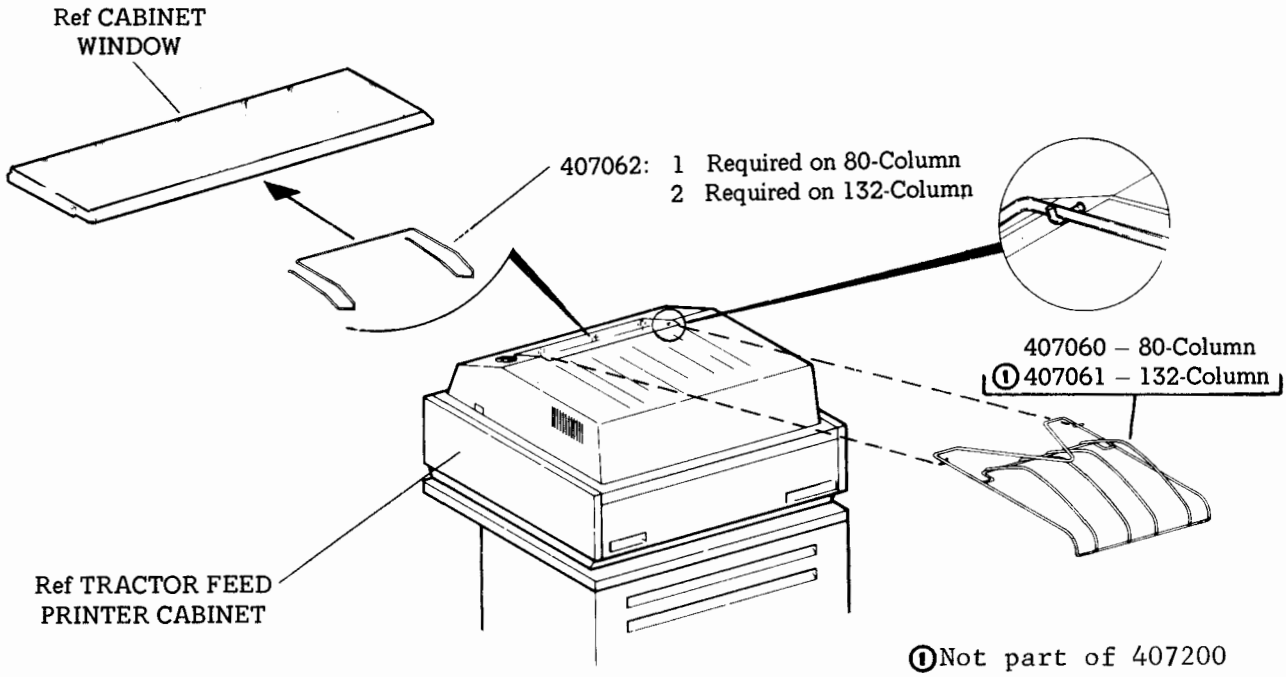

407200 Modification Kit to Facilitate Handling Single-Ply Fanfold Paper

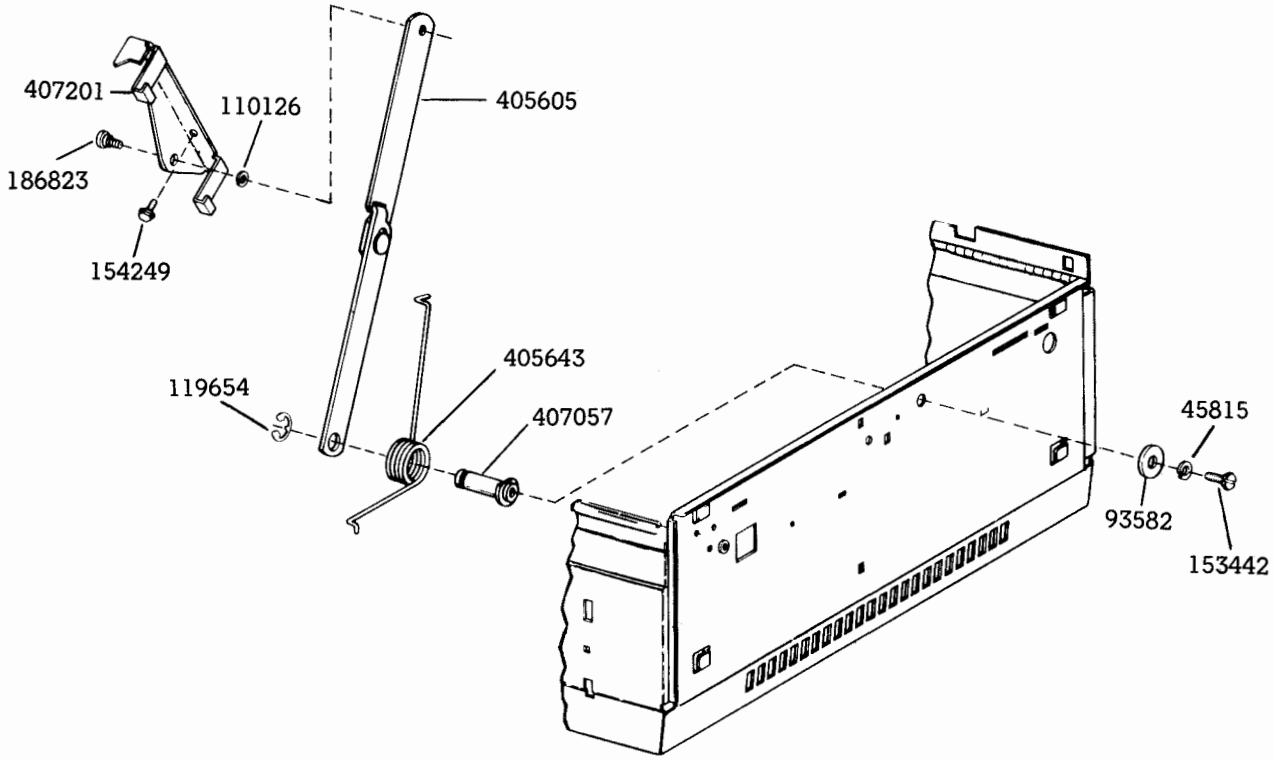

Specification 50871S

407202 Dome Counterbalance Modification Kit for 80-Column Tractor Feed Cabinets

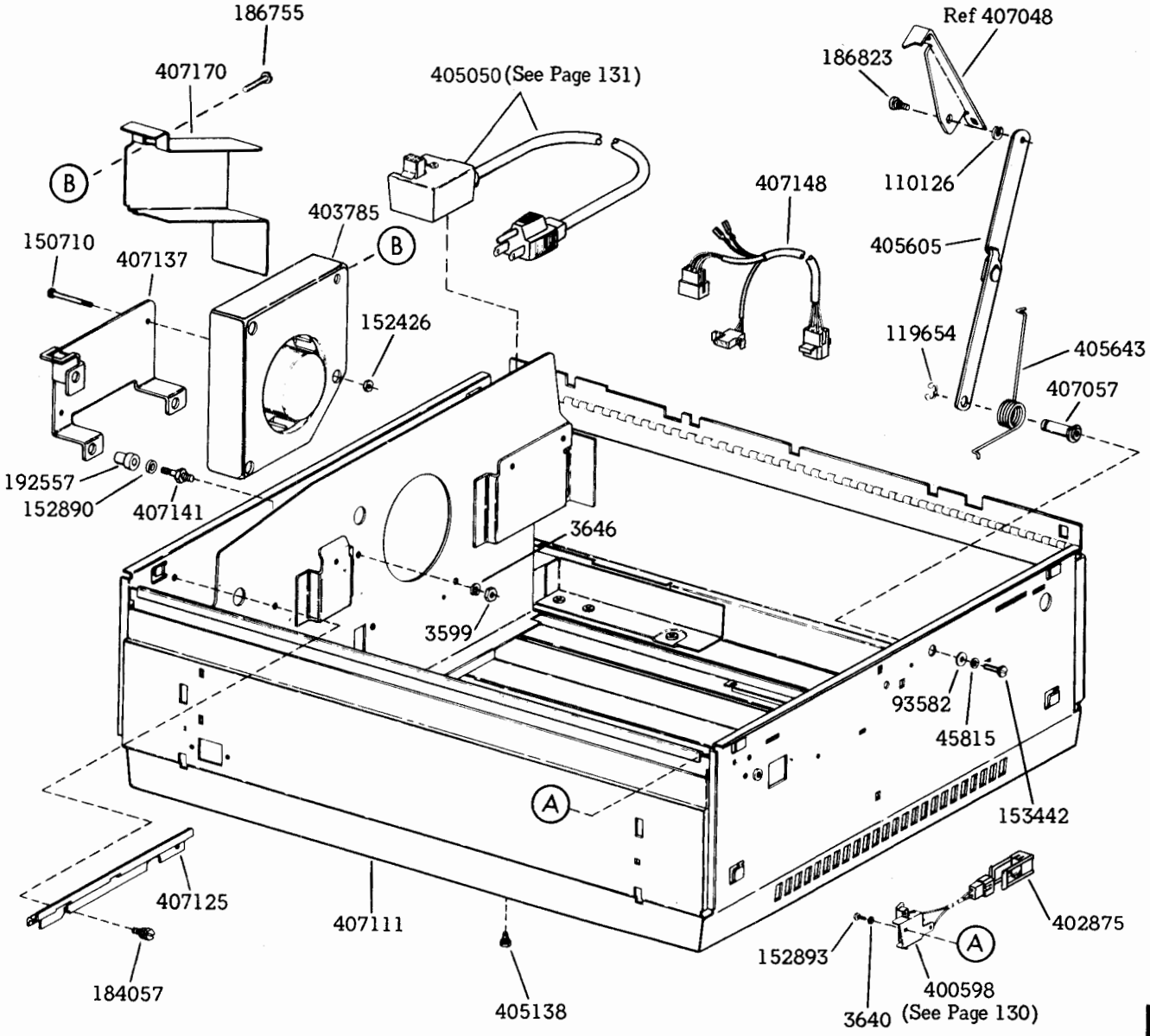

40CAB371/ZZ Printer Cabinet Core for Noise Reduced Friction Feed Cabinet

F. DISASSEMBLY, REASSEMBLY, AND PARTS (Cont)

2. CABINETS, PAPER WINDERS, AND FACILITIES (Cont)

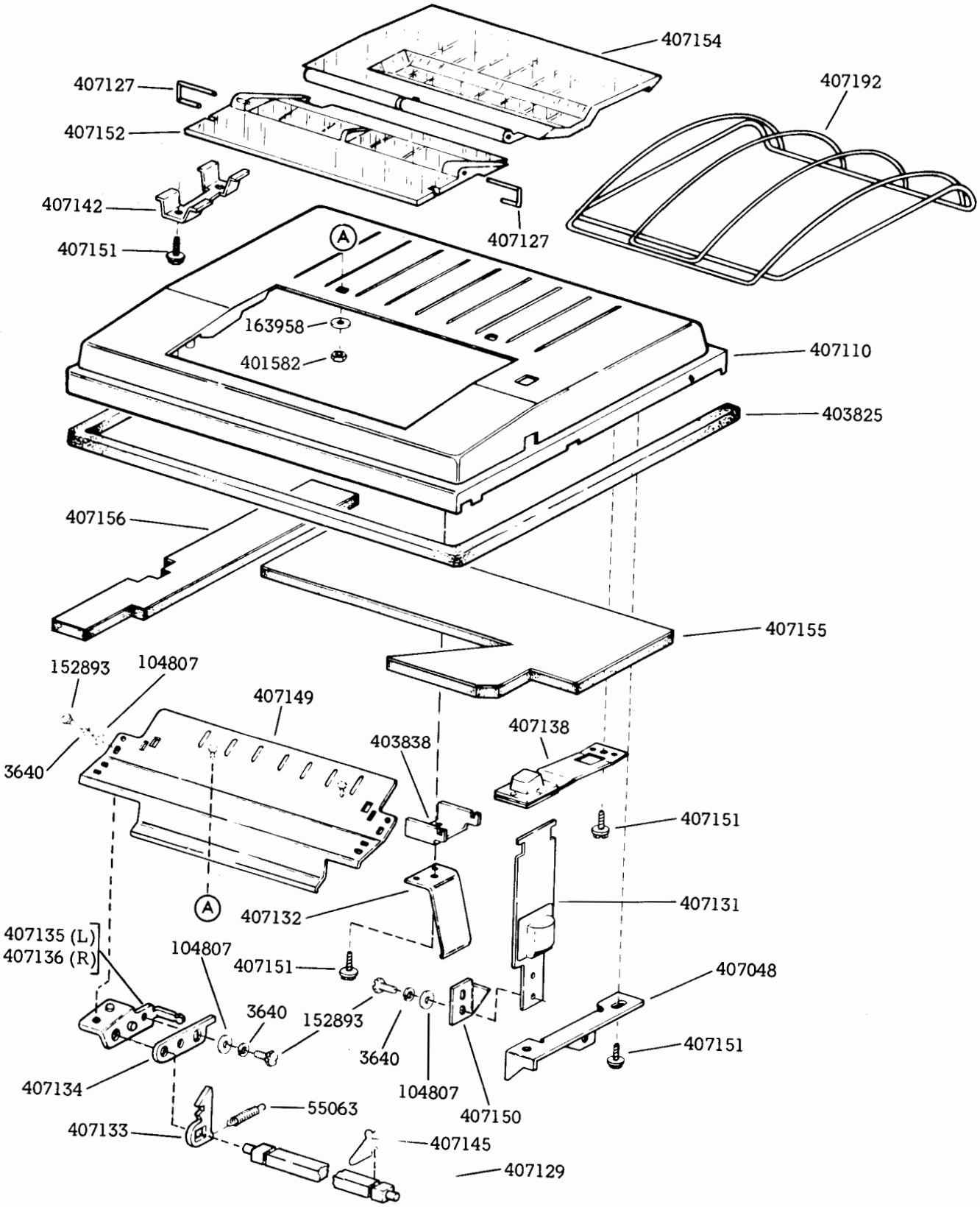

40CAB371/ZZ Printer Cabinet Core for Noise Reduced Friction Feed Cabinet (Cont)

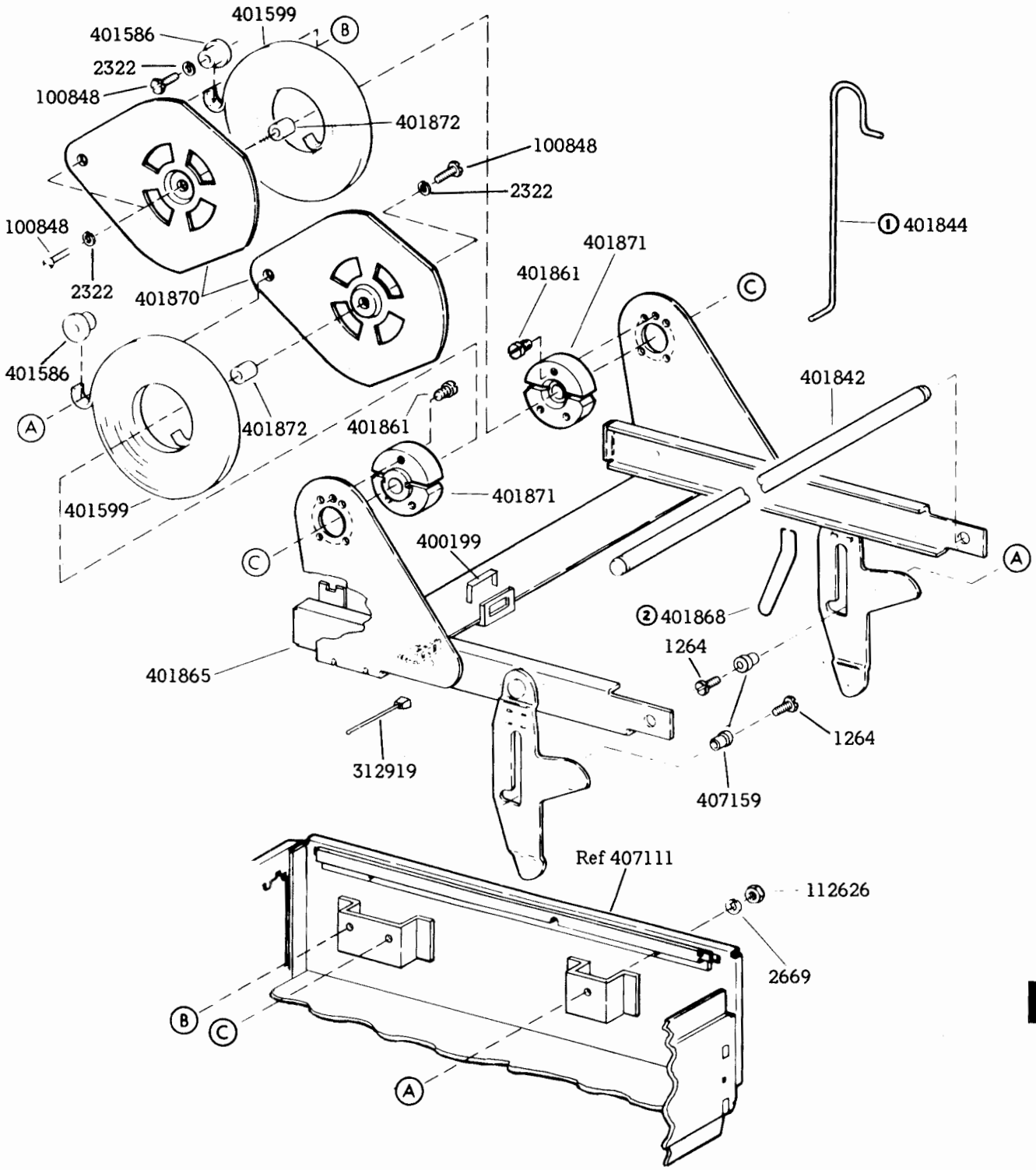

①Used when shipping cabinet
②Part of 401865

40CAB371/ZZ Printer Cabinet Core for Noise Reduced Friction Feed Cabinet (Cont)

F. DISASSEMBLY, REASSEMBLY, AND PARTS (Cont)

2. CABINETS, PAPER WINDERS, AND FACILITIES (Cont)

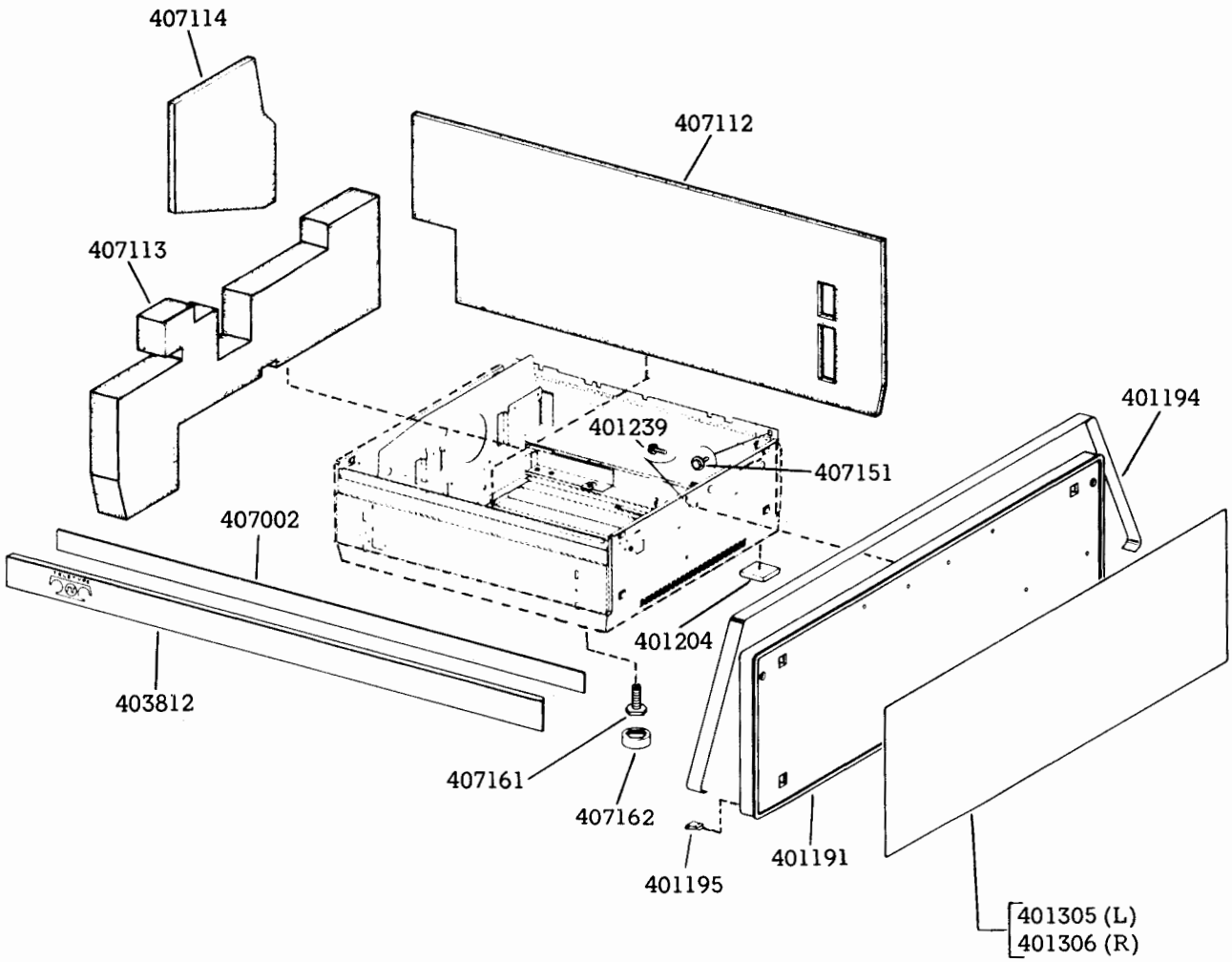

40CAB371/ZZ Printer Cabinet Core for Noise Reduced Friction Feed Cabinet (Cont)

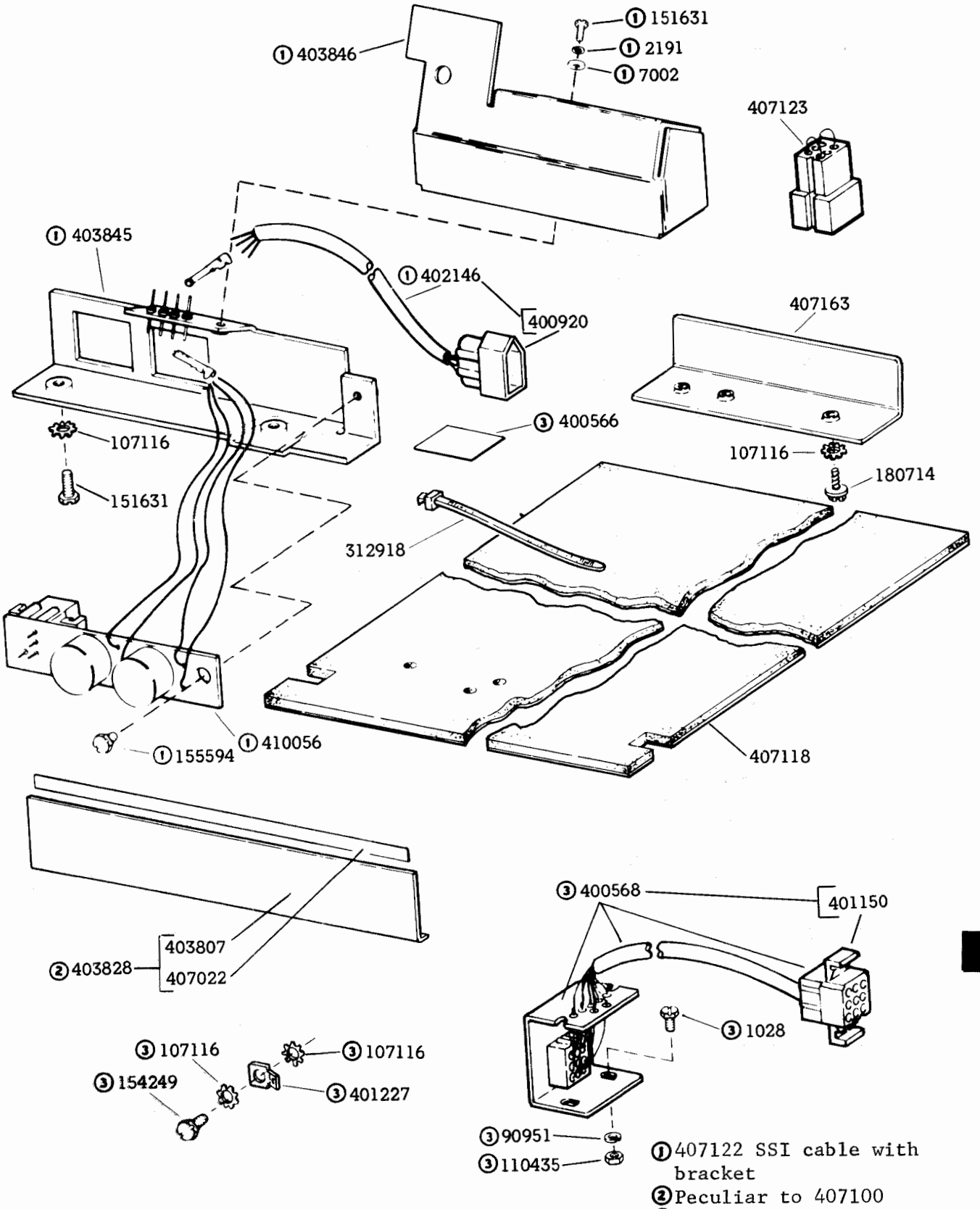

① 407122 SSI cable with bracket
② Peculiar to 407100
③ Peculiar to 407102

Specification 50854S

407100 and 407102 Modification Kits for 40CAB371/ZZ Cabinets

F. DISASSEMBLY, REASSEMBLY, AND PARTS (Cont)

2. CABINETS, PAPER WINDERS, AND FACILITIES (Cont)

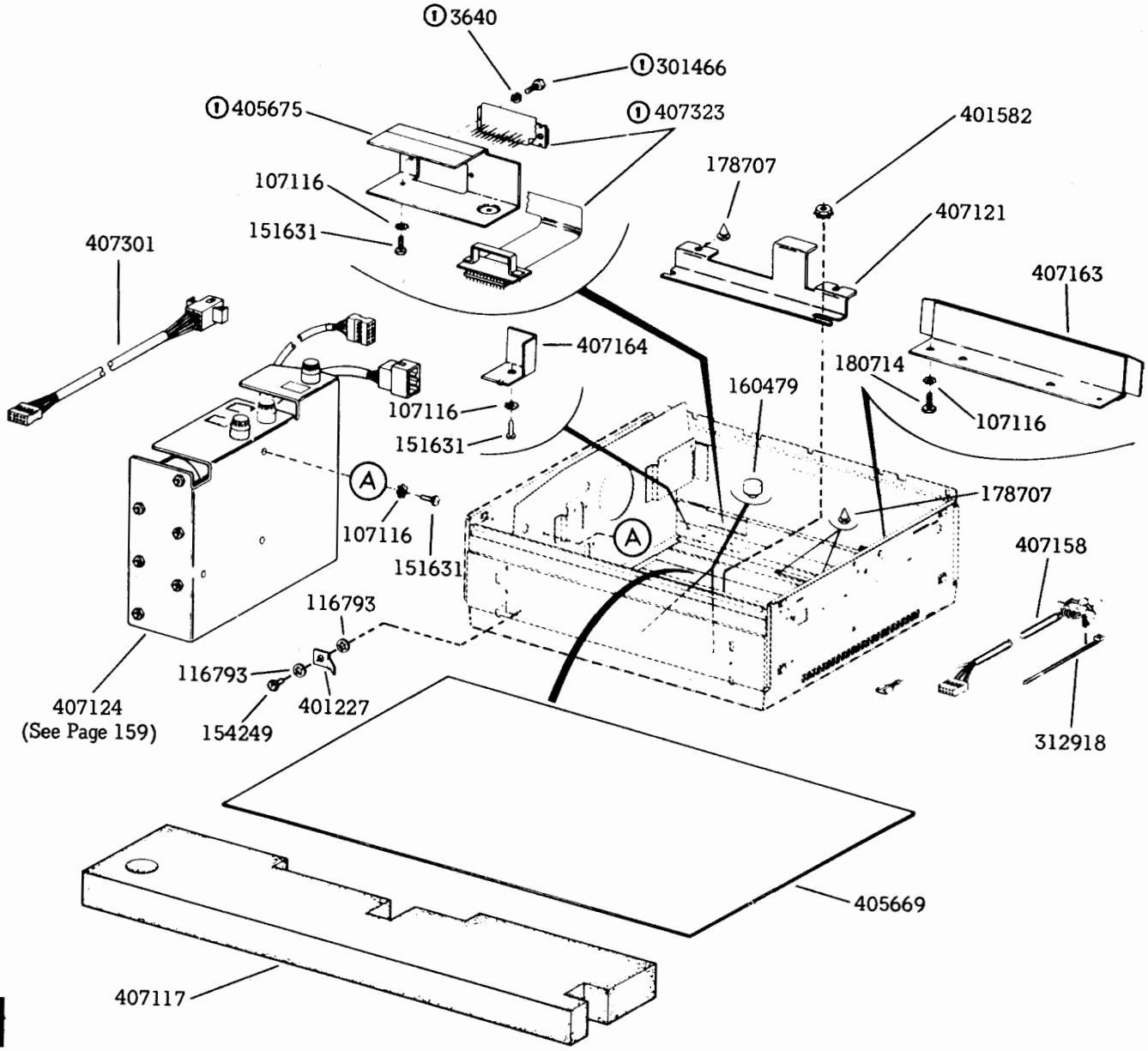

①407077 EIA Bracket Assembly

Specification 50854S

407101 Modification Kit for 40CAB371/ZZ Cabinet

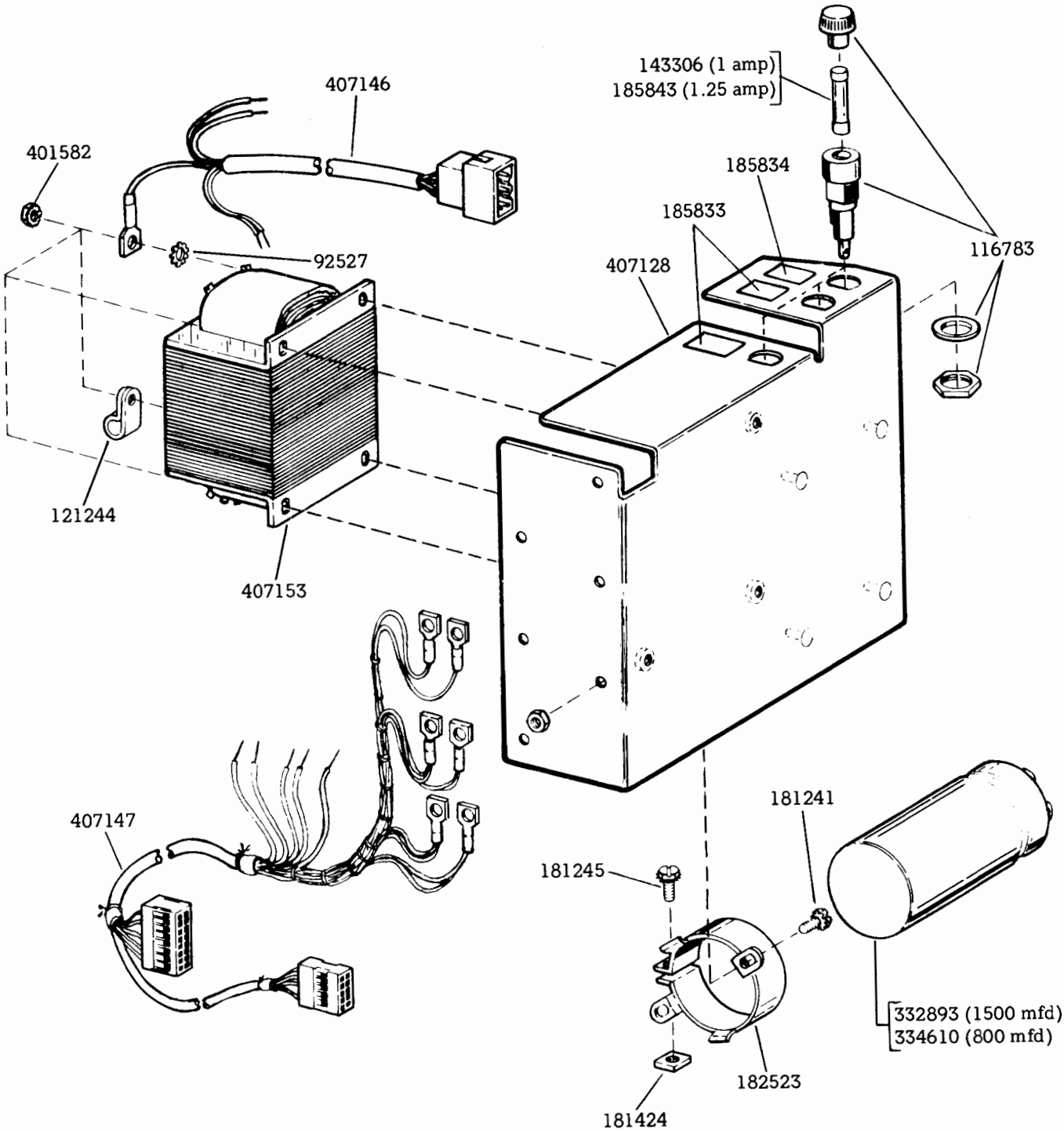

NOTE: All parts shown are assembled as 407124 power supply.

Specification 50854S

407101 Modification Kit for 40CAB371/ZZ Cabinet (Cont)

F. DISASSEMBLY, REASSEMBLY, AND PARTS (Cont)

2. CABINETS, PAPER WINDERS, AND FACILITIES (Cont)

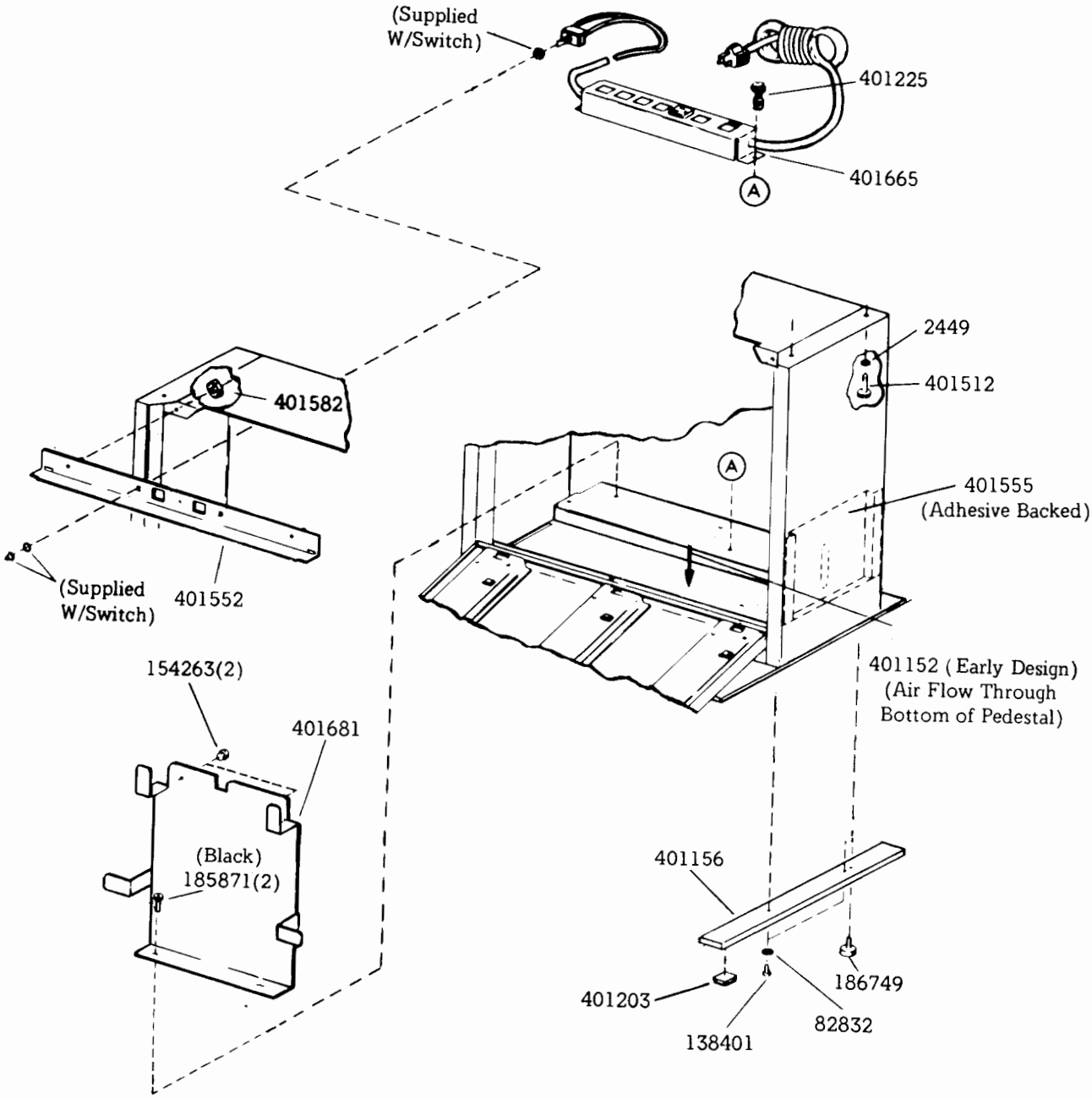

Early Design
(For late design parts, see Page 161.)

40CAB901 Series Cabinet (Early Design)

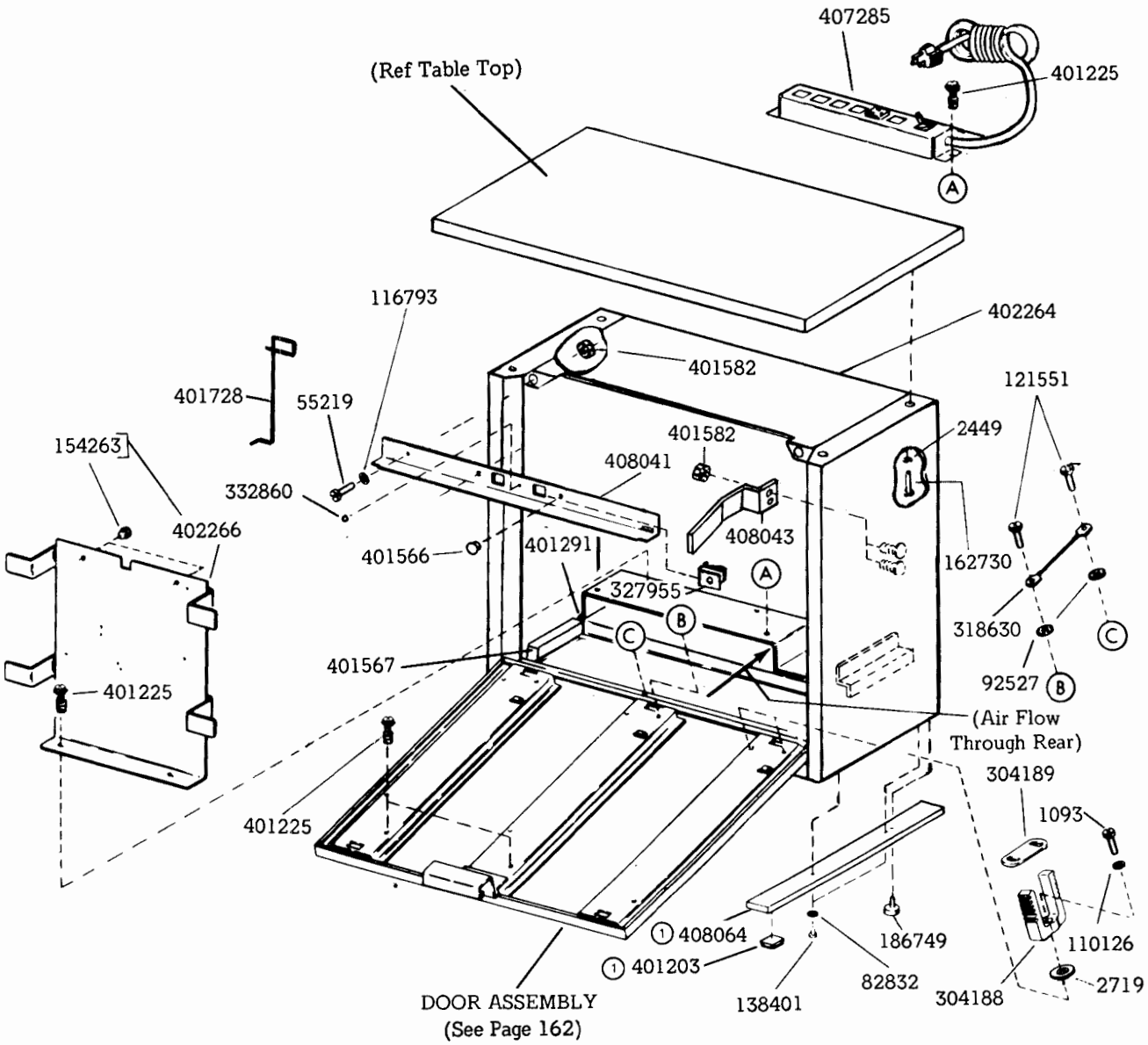

1 405557 Foot W/Bumper

Late Design
(For early design parts, see Page 160.)

40CAB901 Series Cabinet (Late Design)

F. DISASSEMBLY, REASSEMBLY, AND PARTS (Cont)

2. CABINETS, PAPER WINDERS, AND FACILITIES (Cont)

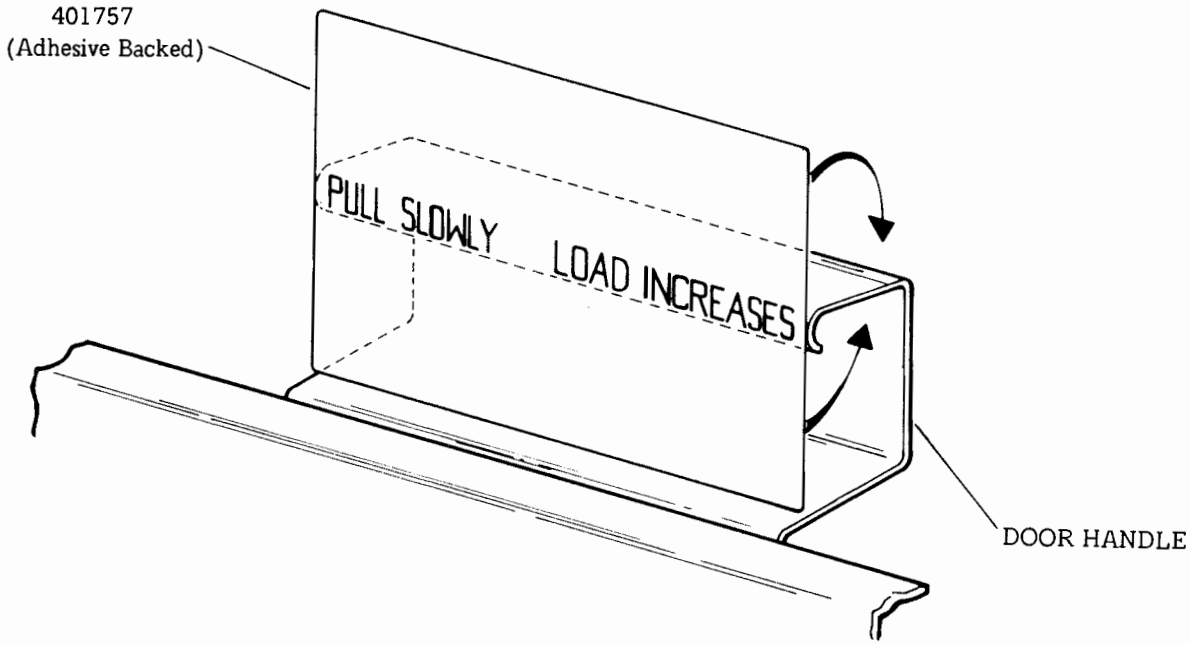

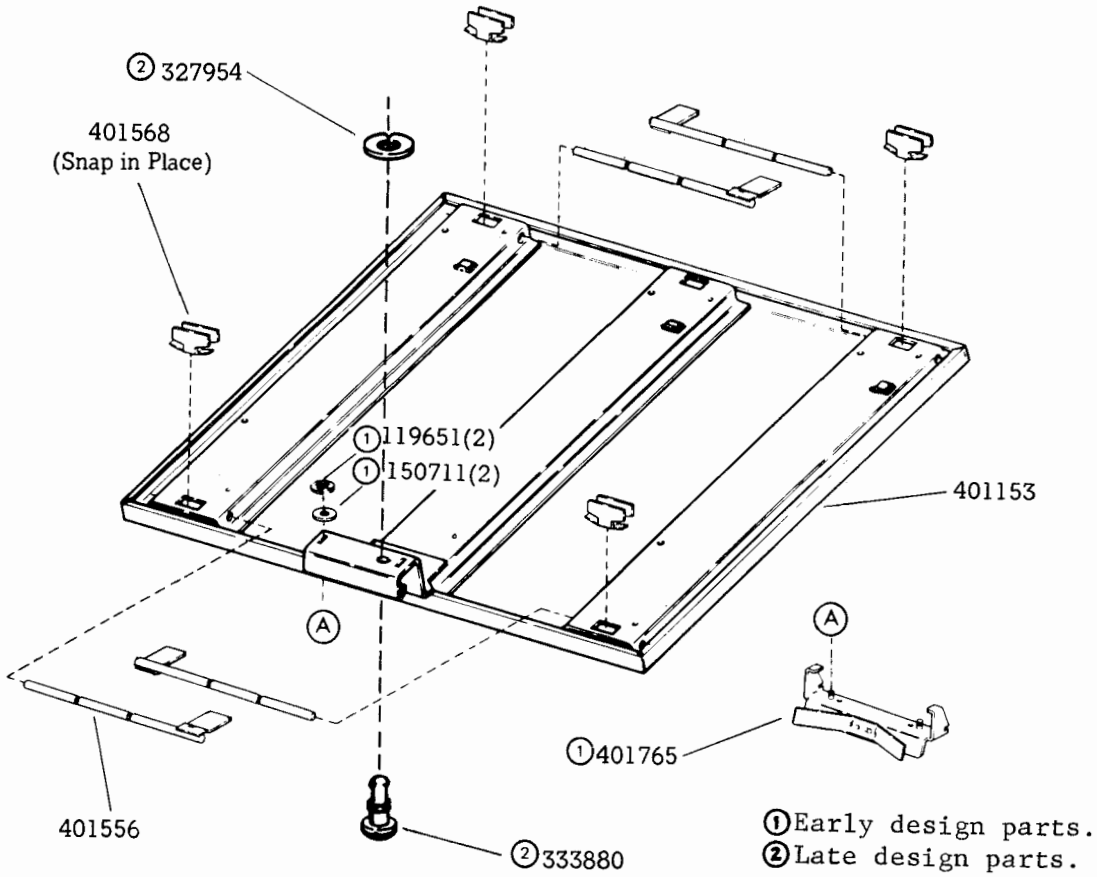

Pedestal Door Components

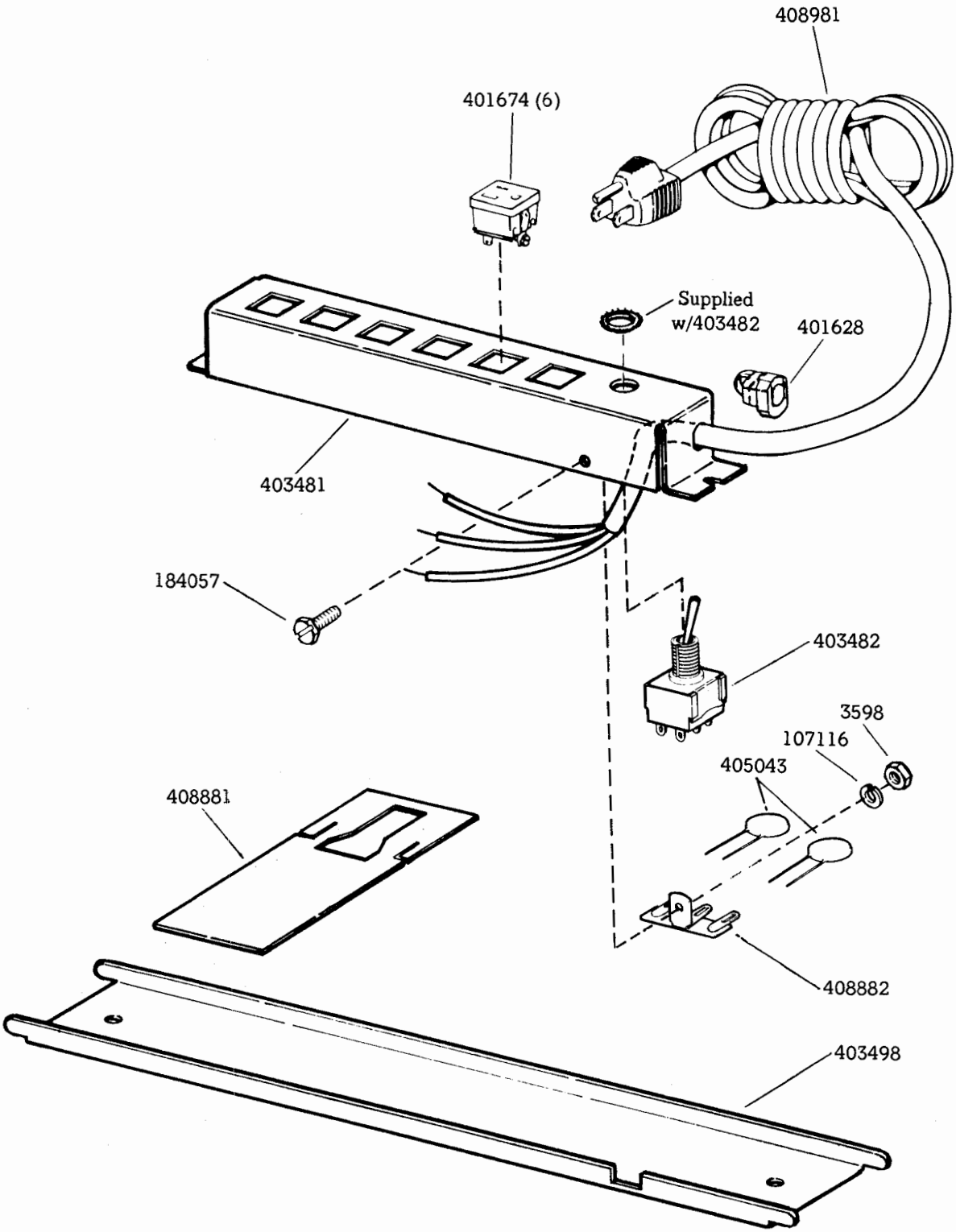

407285 AC Distribution Assembly (Late Design)

F. DISASSEMBLY, REASSEMBLY, AND PARTS (Cont)

2. CABINETS, PAPER WINDERS, AND FACILITIES (Cont)

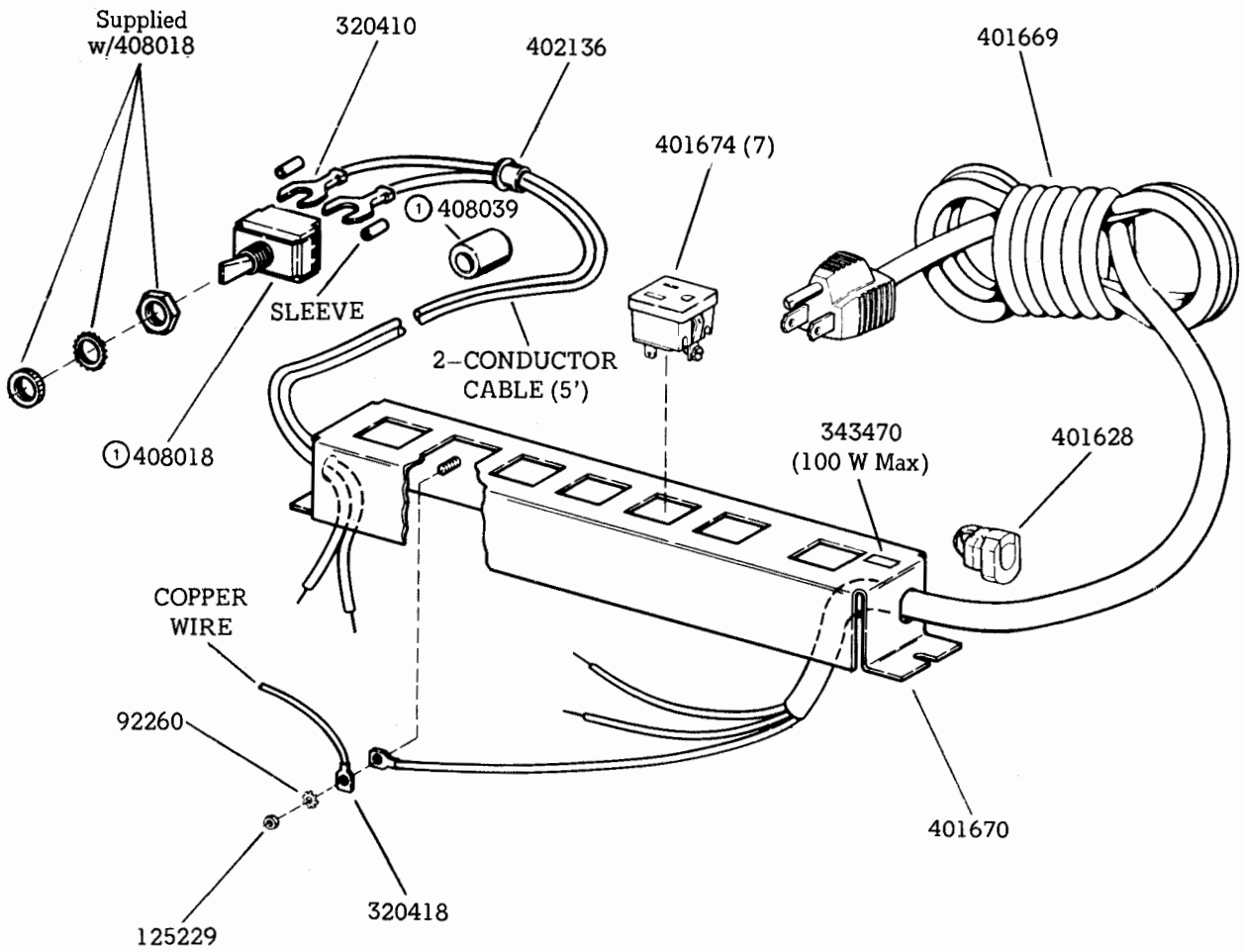

[redacted]

① 408052 Switch Assembly

401665 AC Distribution Panel Assembly (Early Design)

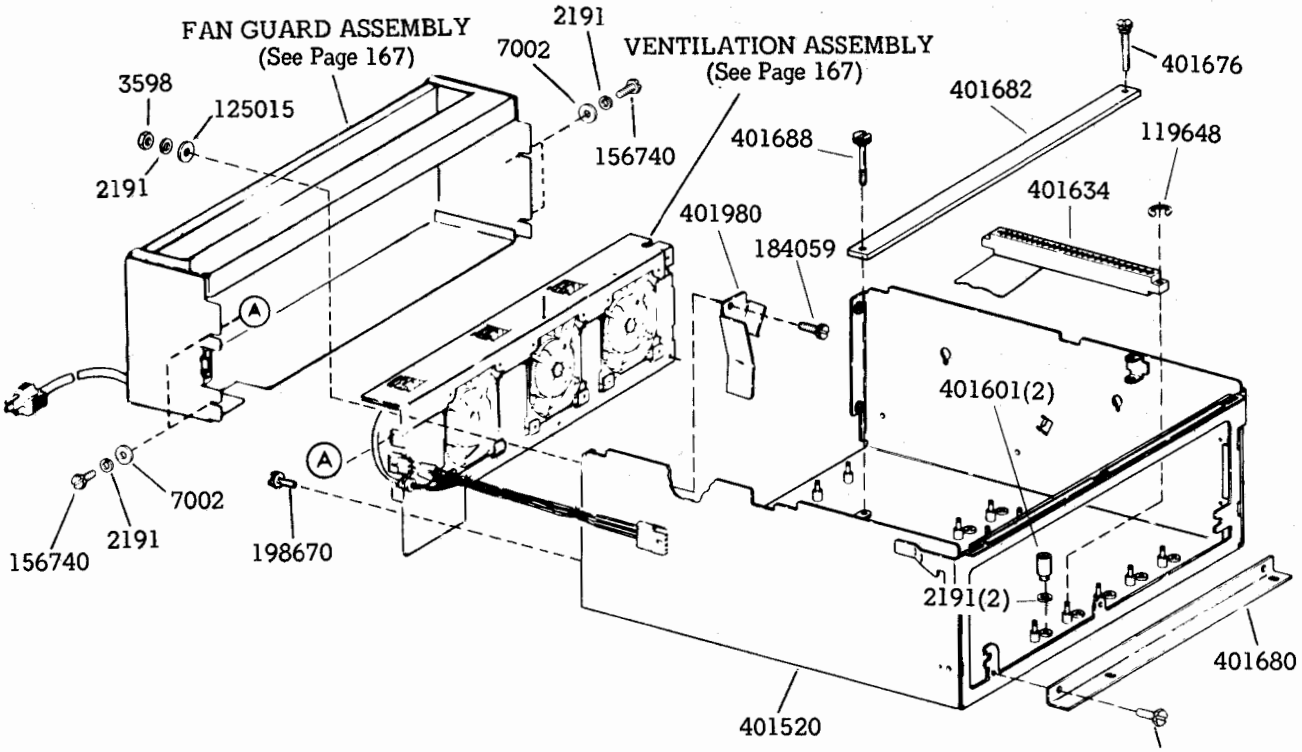

407378 RO Module Assembly for 40CAB901/AF Cabinet
(Air-Flow Through Rear)

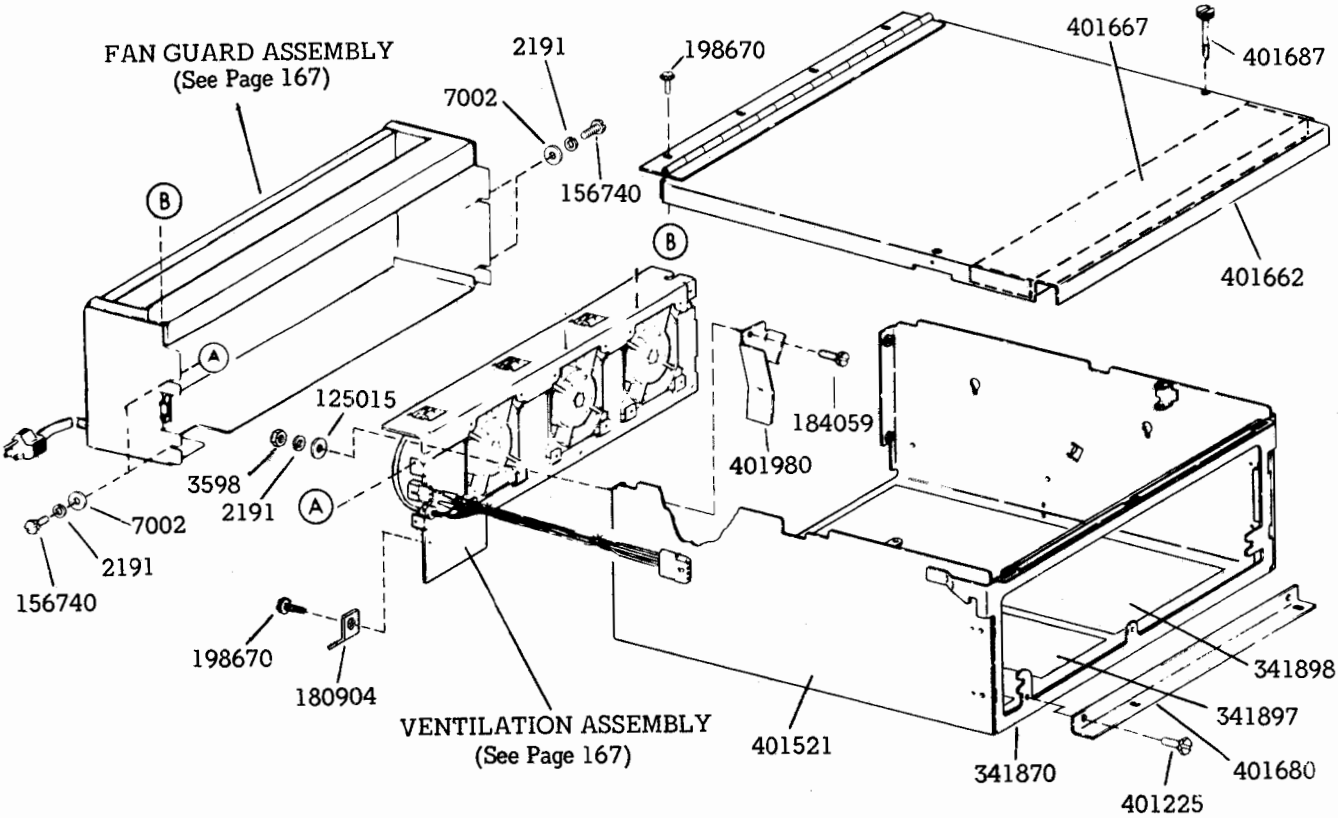

KDP Module Assembly for 40CAB901/AG Cabinet (Air-Flow Through Rear)

F. DISASSEMBLY, REASSEMBLY, AND PARTS (Cont)

2. CABINETS, PAPER WINDERS, AND FACILITIES (Cont)

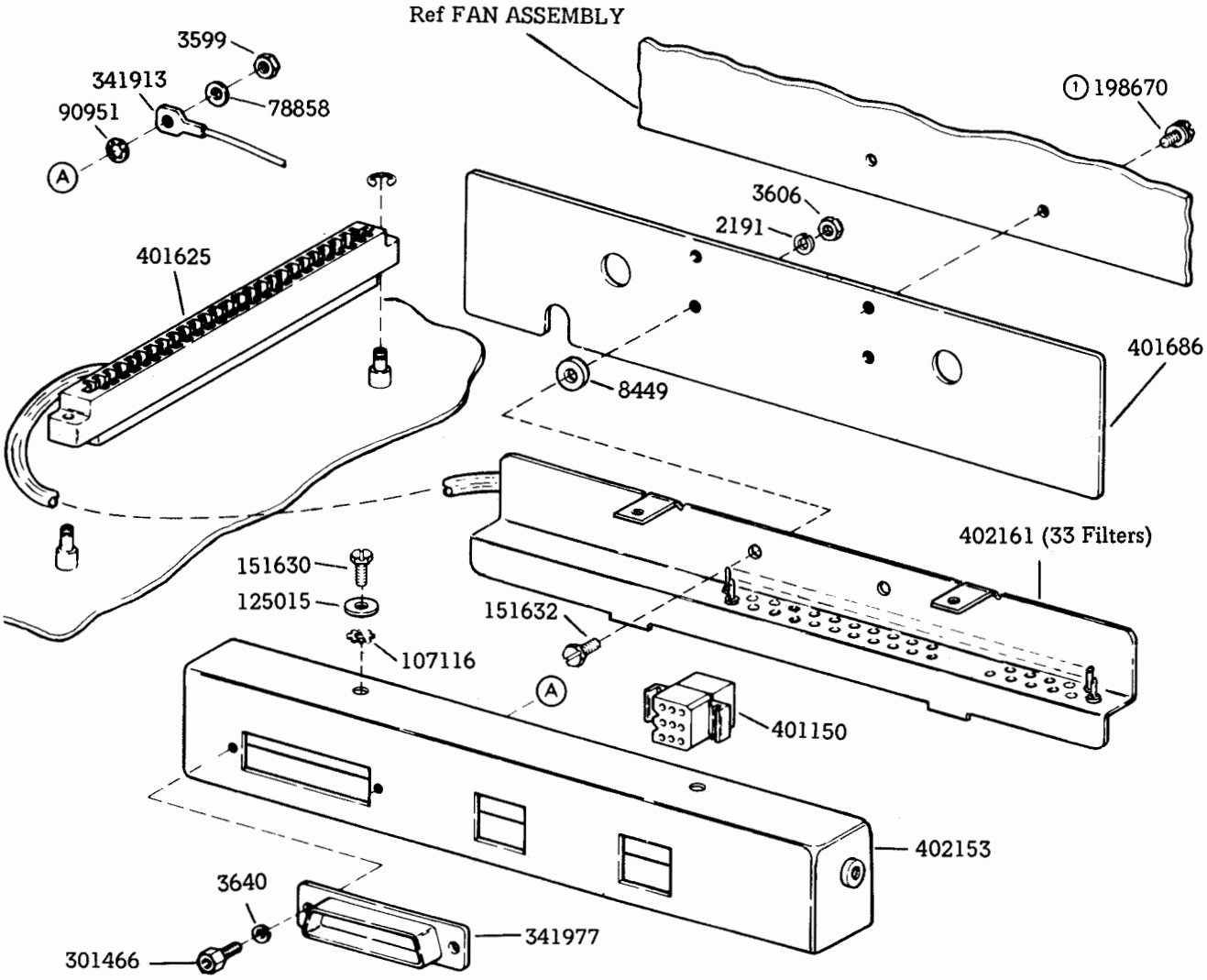

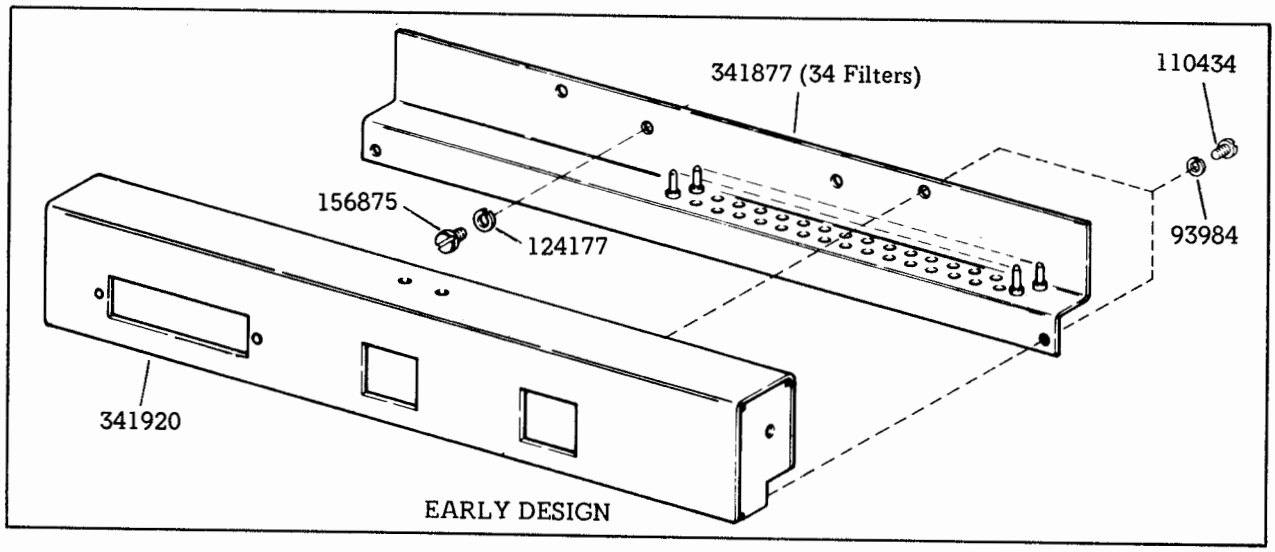

401643 RO Controller Cable Assembly

① Not Part of 401643

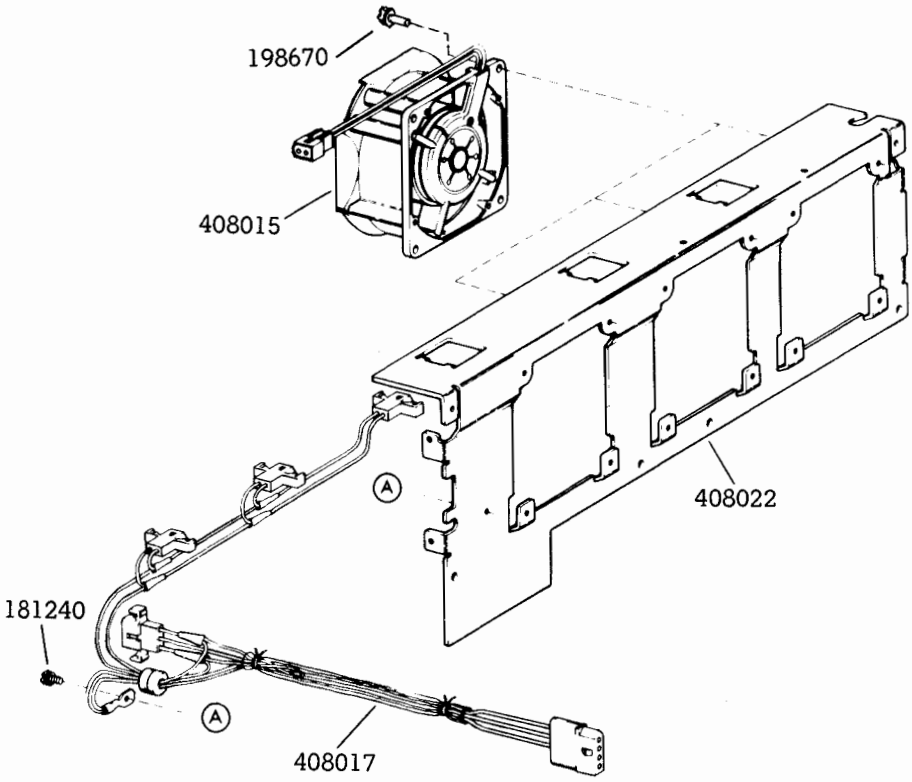

408050 Ventilation Assembly

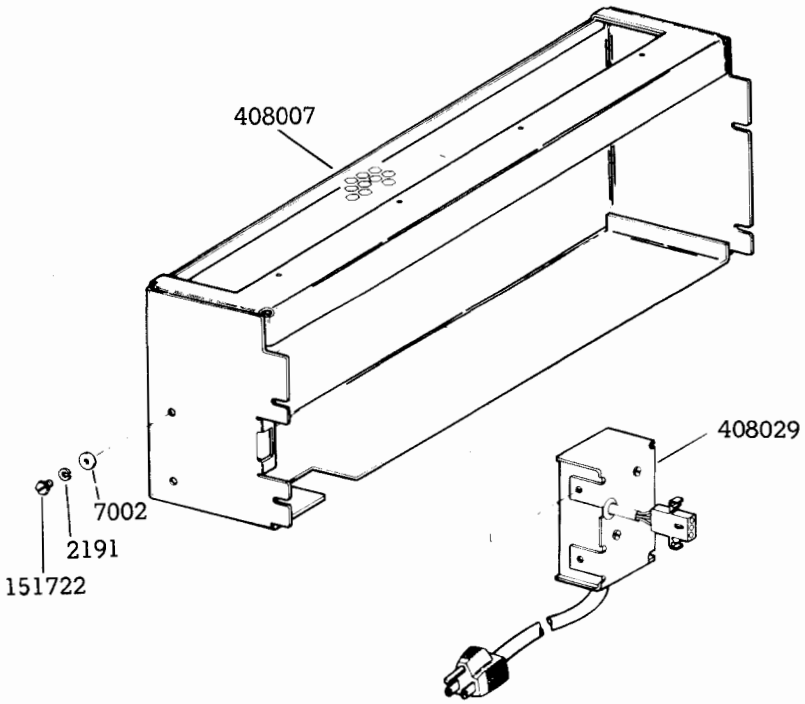

408030 Fan Guard Assembly

F. DISASSEMBLY, REASSEMBLY, AND PARTS (Cont)

2. CABINETS, PAPER WINDERS, AND FACILITIES (Cont)

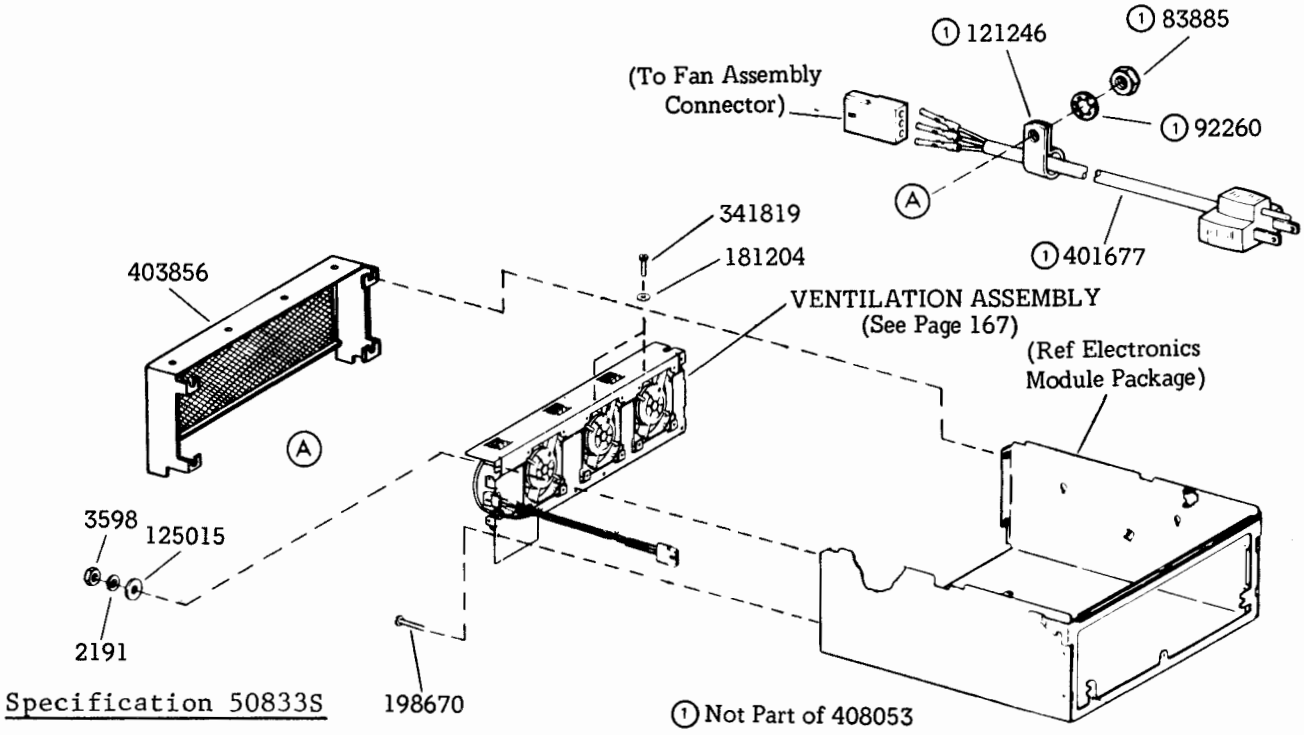

408053 Modification Kit to Provide Ventilation Assembly to 40CAB901/AF, AG (Air-Flow Through Bottom) and 40CAB902/AB Cabinets

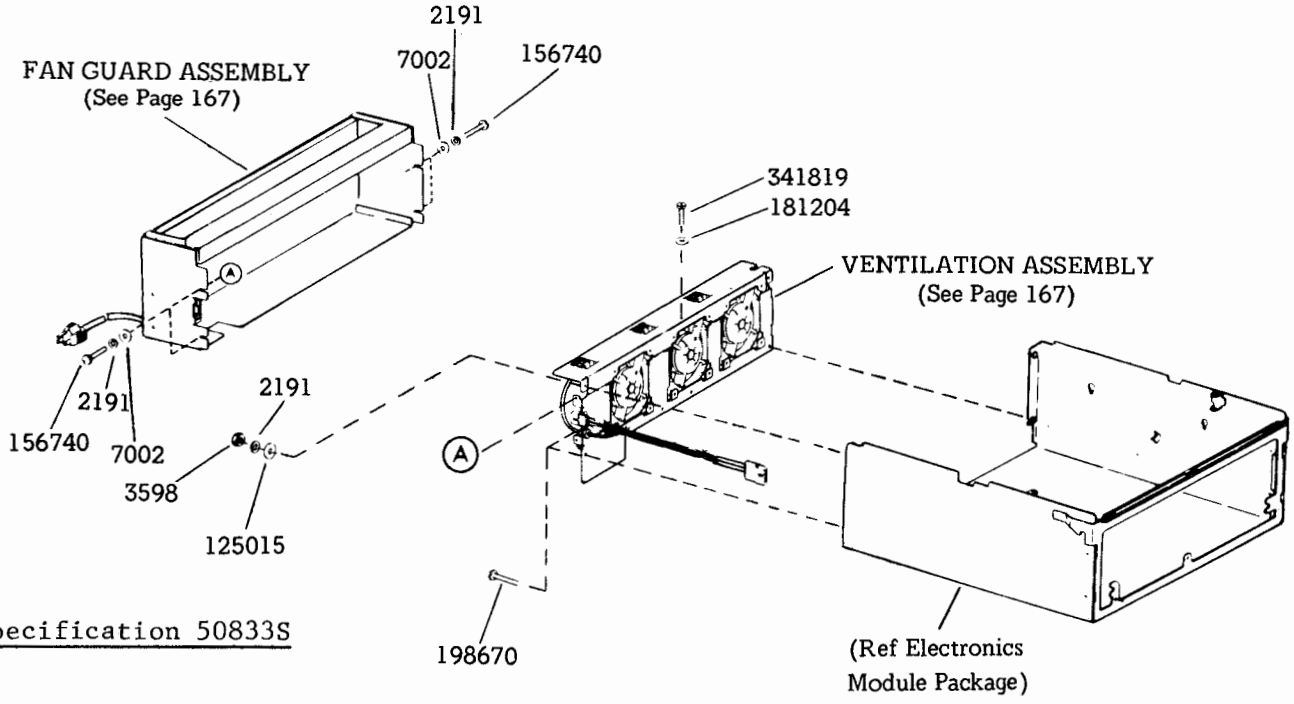

408054 Modification Kit to Provide Ventilation Assembly to 40CAB901/AF and AG (Air-Flow Through Rear)

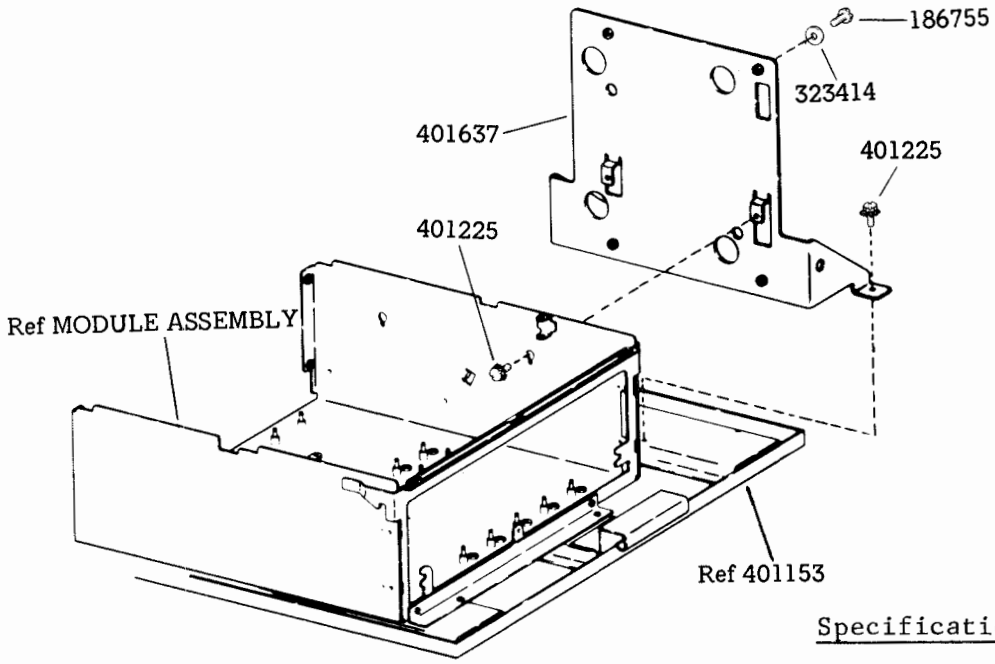

Specification 50802S

401725 Modification Kit to Provide a Pedestal Type Model 40 Cabinet With Data Set 202D or 202R Mounting Facilities (40CAB901/XX)

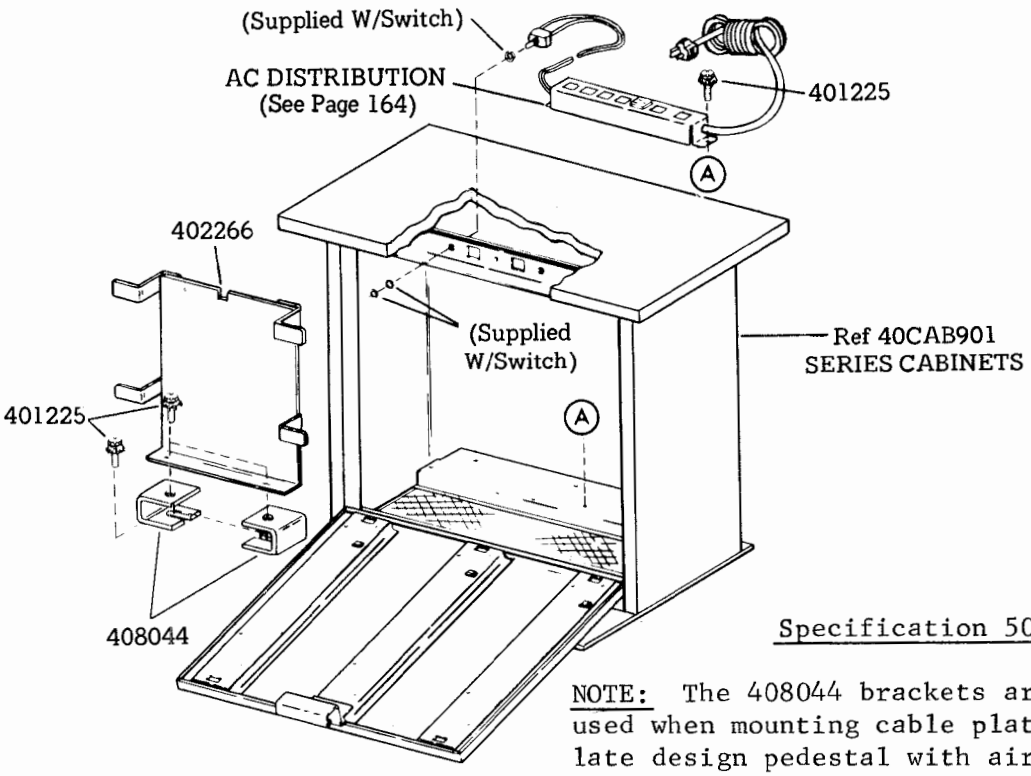

Specification 50802S

NOTE: The 408044 brackets are not used when mounting cable plate to a late design pedestal with air flow through rear.

408045 Modification Kit to Provide a Pedestal With AC Power Distribution, Terminal Block, Transformer Mounting Facility and Cable Storage

F. DISASSEMBLY, REASSEMBLY, AND PARTS (Cont)

2. CABINETS, PAPER WINDERS, AND FACILITIES (Cont)

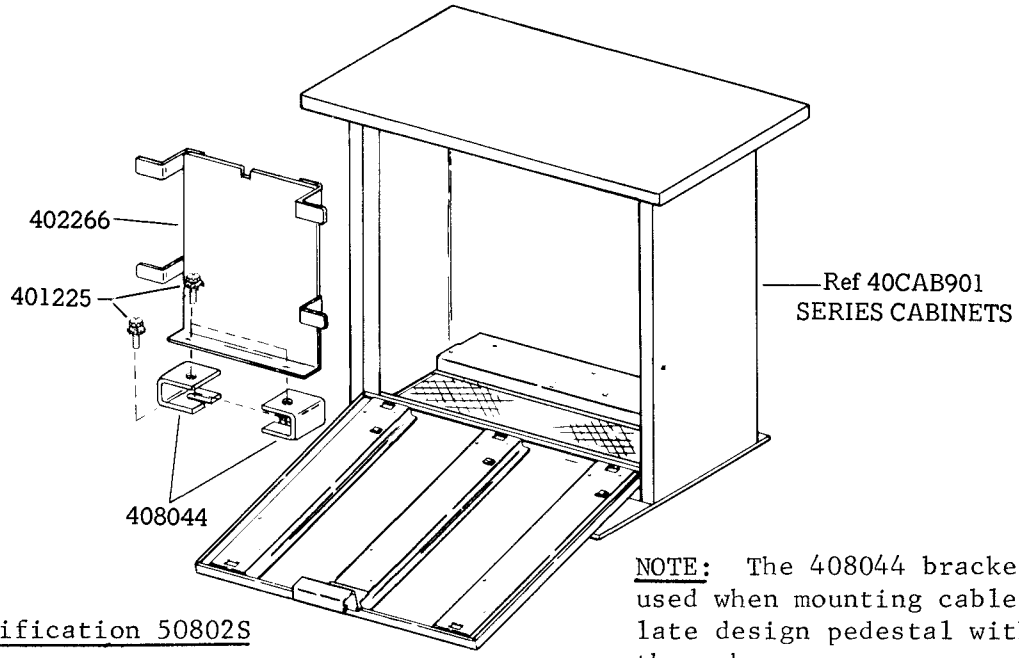

Specification 50802S

NOTE: The 408044 brackets are not used when mounting cable plate to a late design pedestal with air flow through rear.

408047 Modification Kit to Provide Cable Storage Facilities

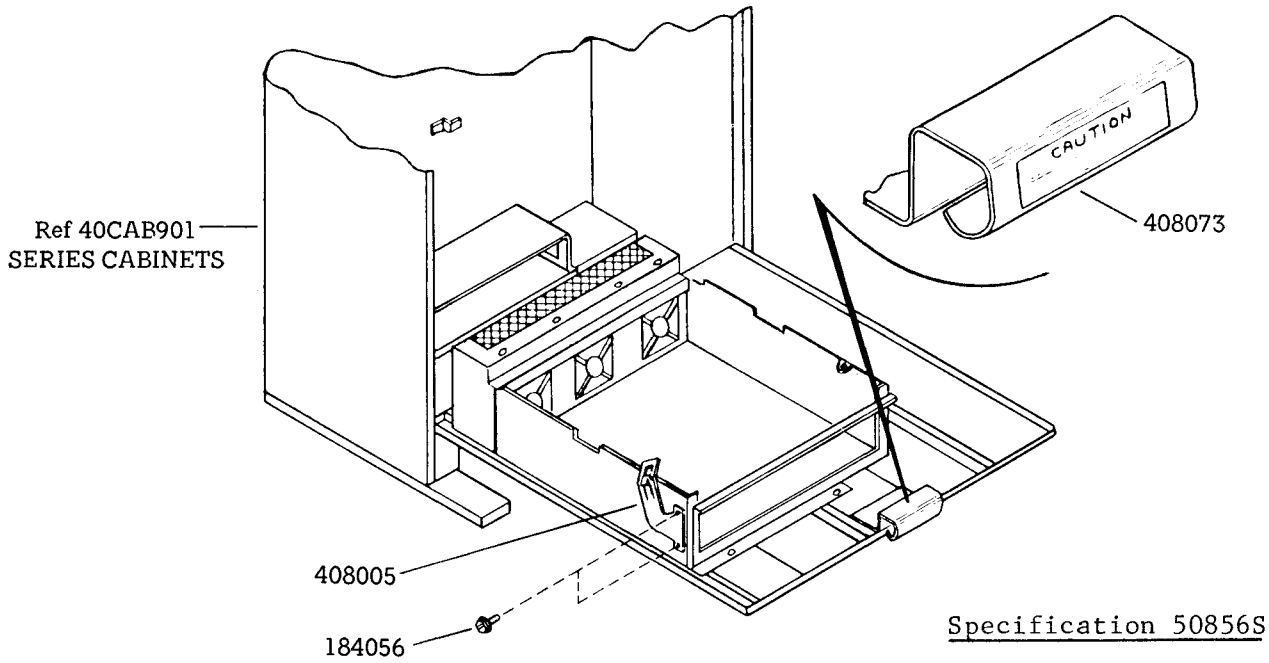

Specification 50856S

408049 Modification Kit to Provide Warning Latch and Label

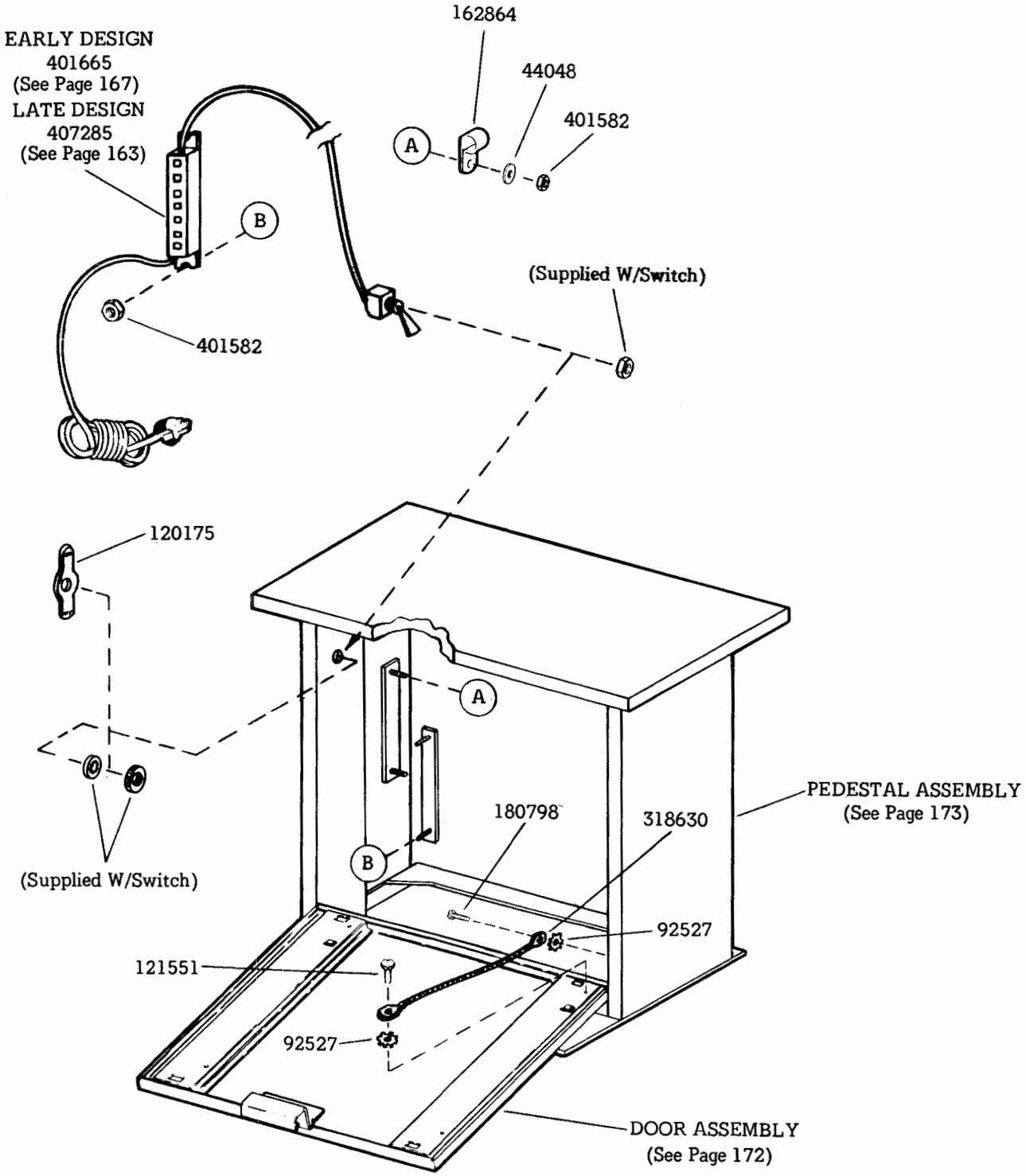

40CAB902/XX Cabinet (Pedestal Type)

F. DISASSEMBLY, REASSEMBLY, AND PARTS (Cont)

2. CABINETS, PAPER WINDERS, AND FACILITIES (Cont)

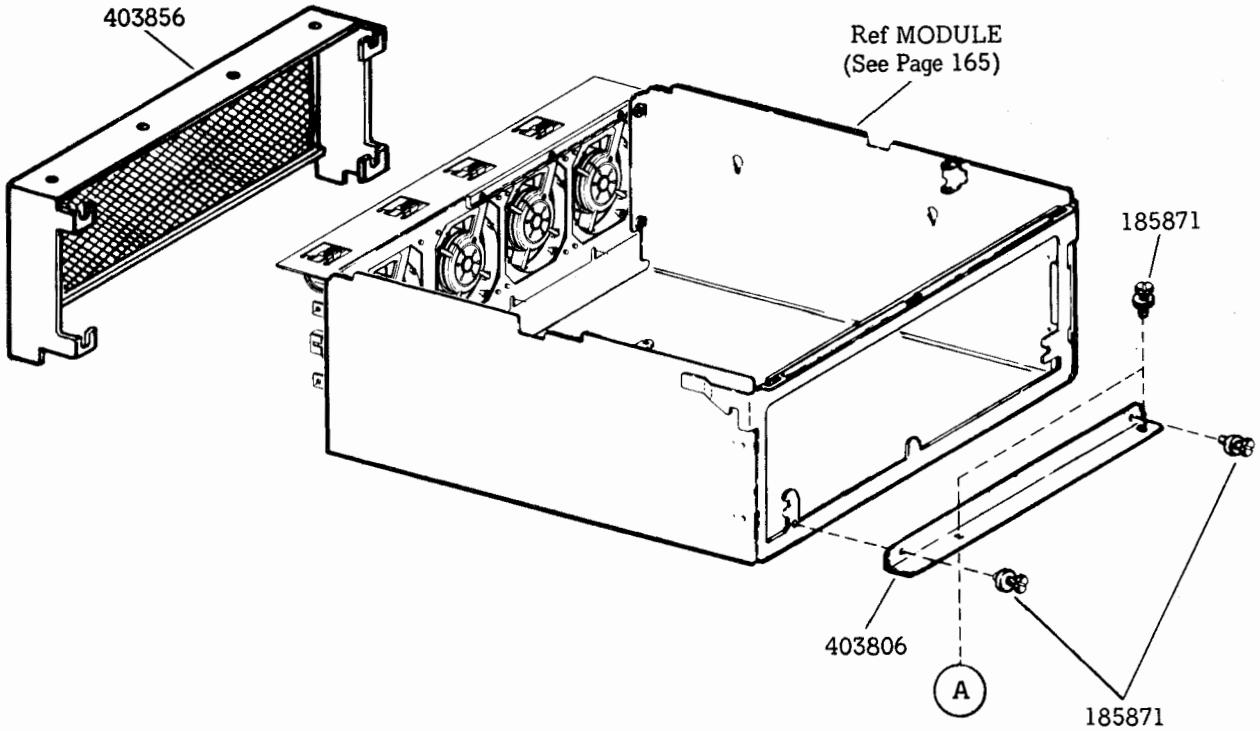

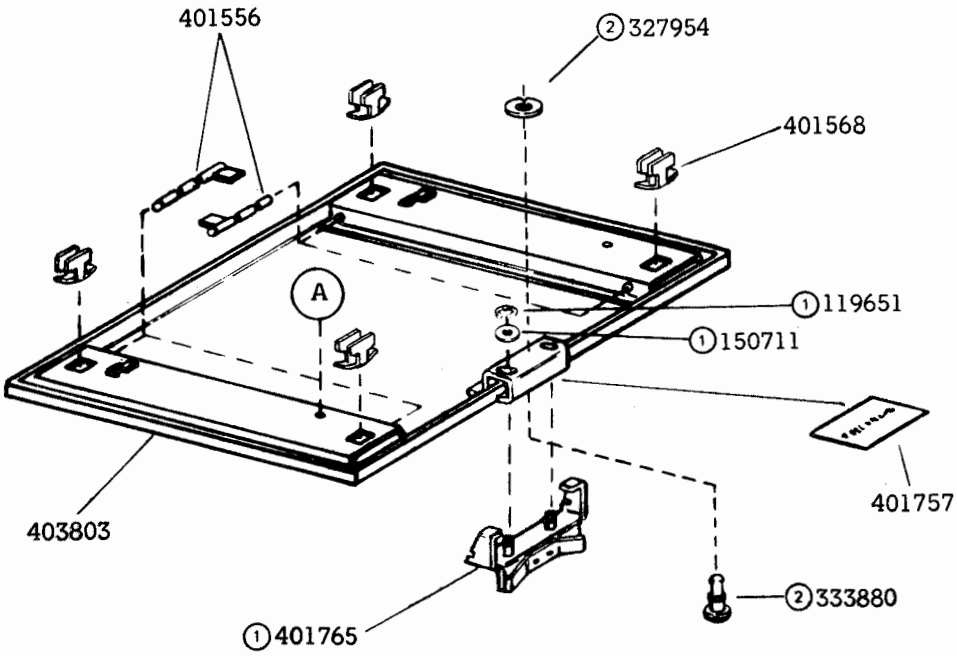

① Early Design Parts
② Late Design Parts

Pedestal Door and Module

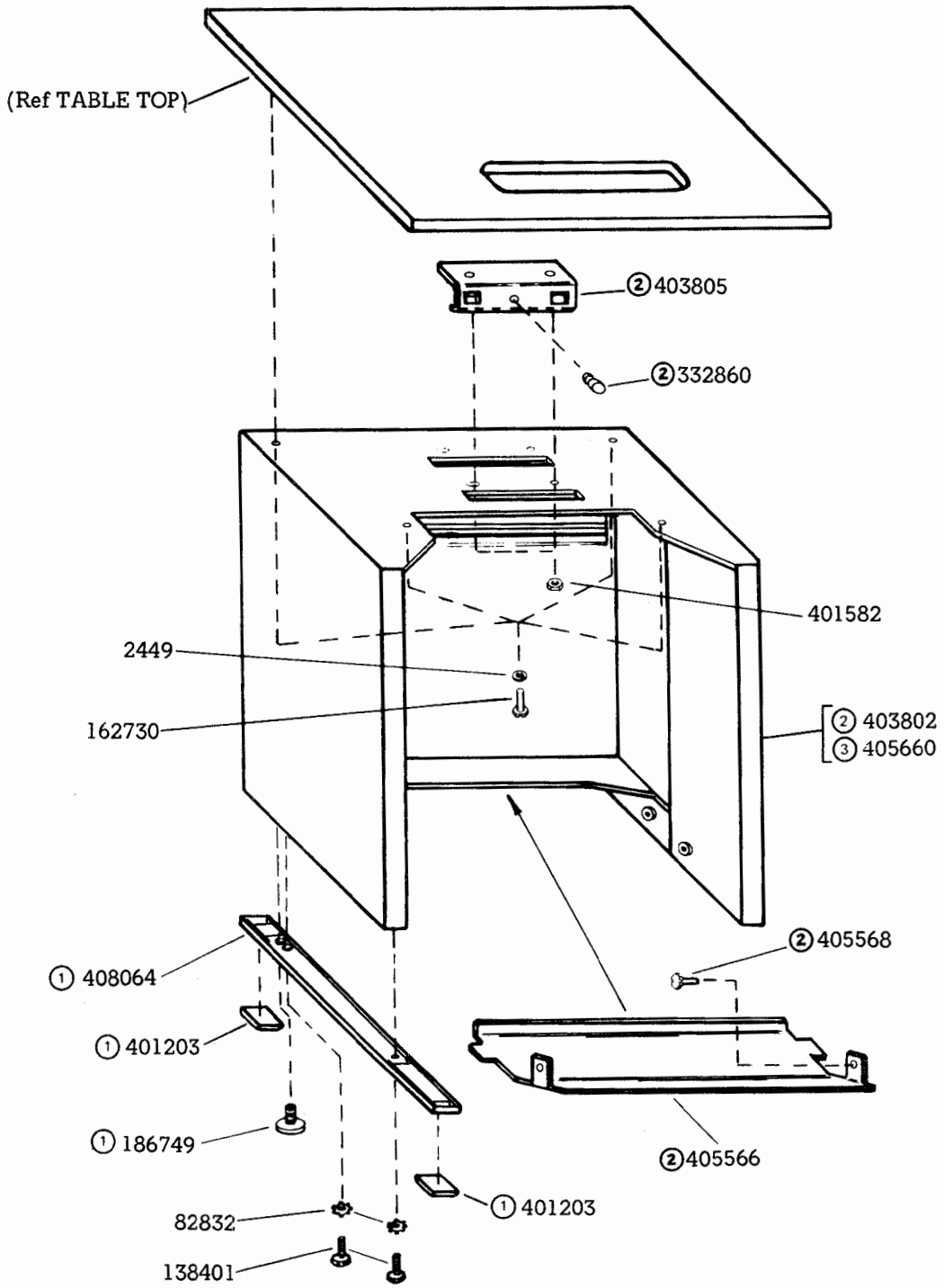

① 405557 Foot W/Bumper

② Peculiar to 40CAB902
③ Peculiar to 40CAB904

40CAB902 and 40CAB904 Pedestals

F. DISASSEMBLY, REASSEMBLY, AND PARTS (Cont)

2. CABINETS, PAPER WINDERS, AND FACILITIES (Cont)

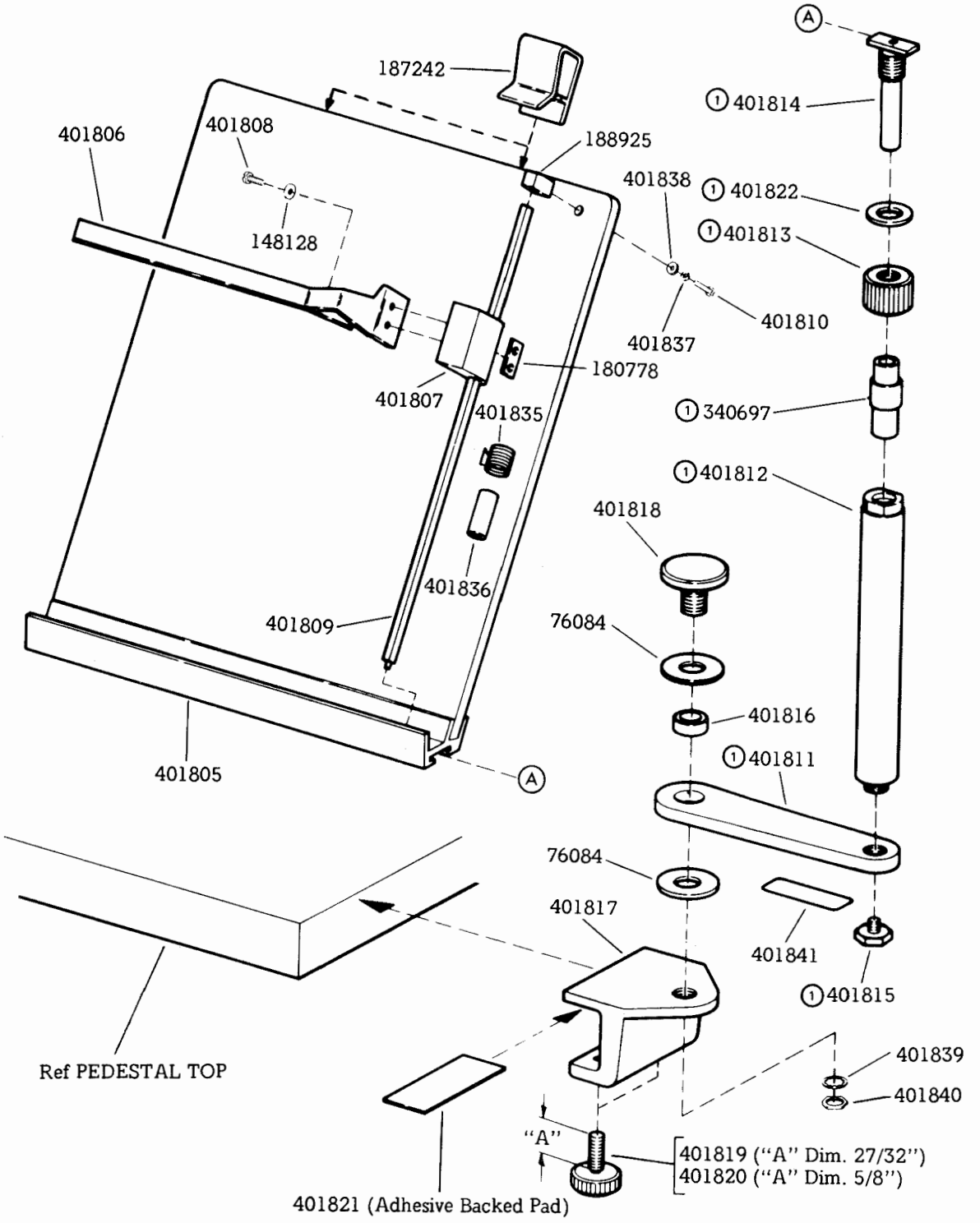

① 401855 Shaft Assembly

401200 Model 40 Copyholder

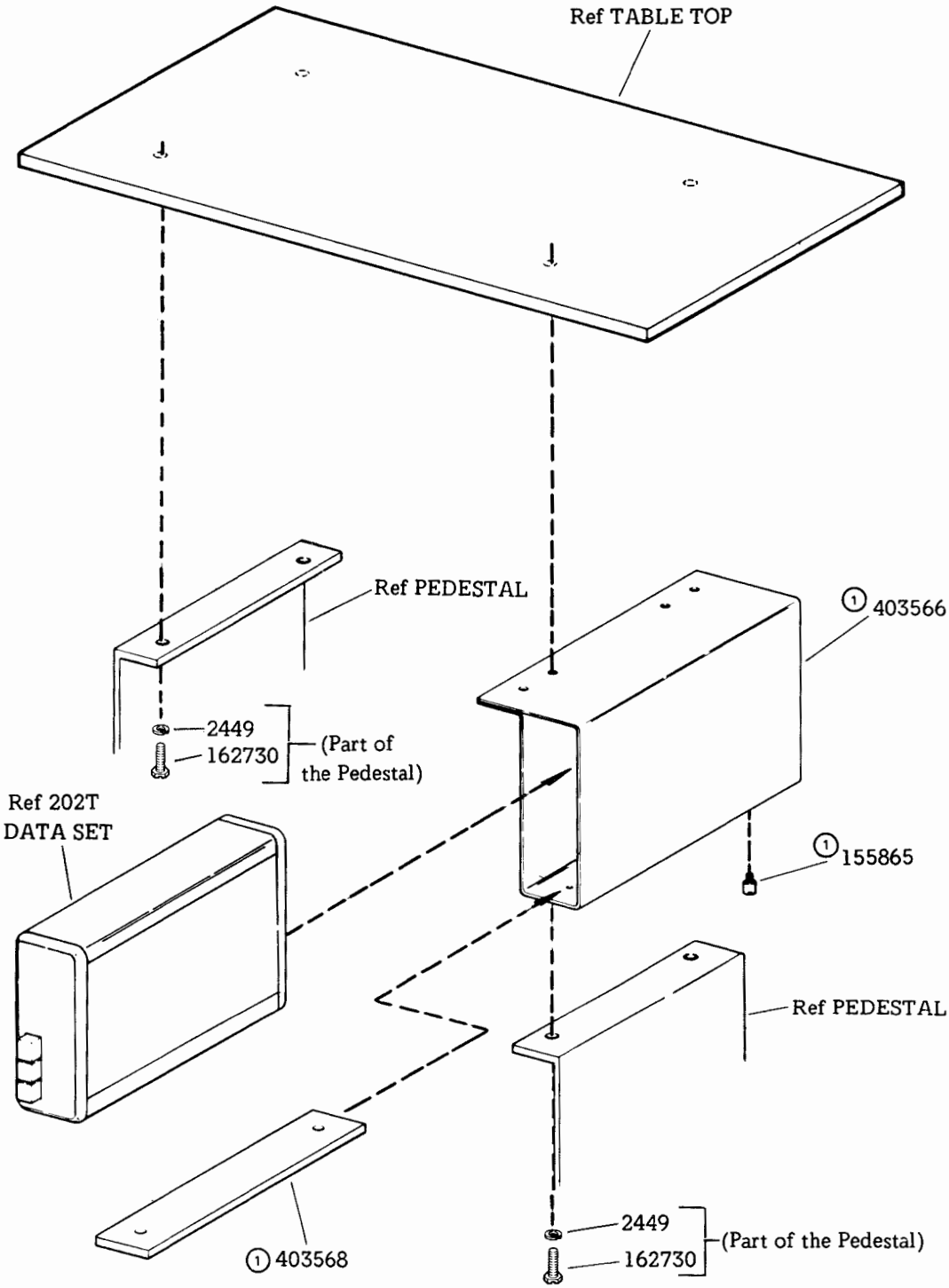

①403567 Holder Assembly

403567 Holder Assembly for Mounting a Data Set 202S or 202T to a Pedestal Type Model 40 Cabinet

F. DISASSEMBLY, REASSEMBLY, AND PARTS (Cont)

2. CABINETS, PAPER WINDERS, AND FACILITIES (Cont)

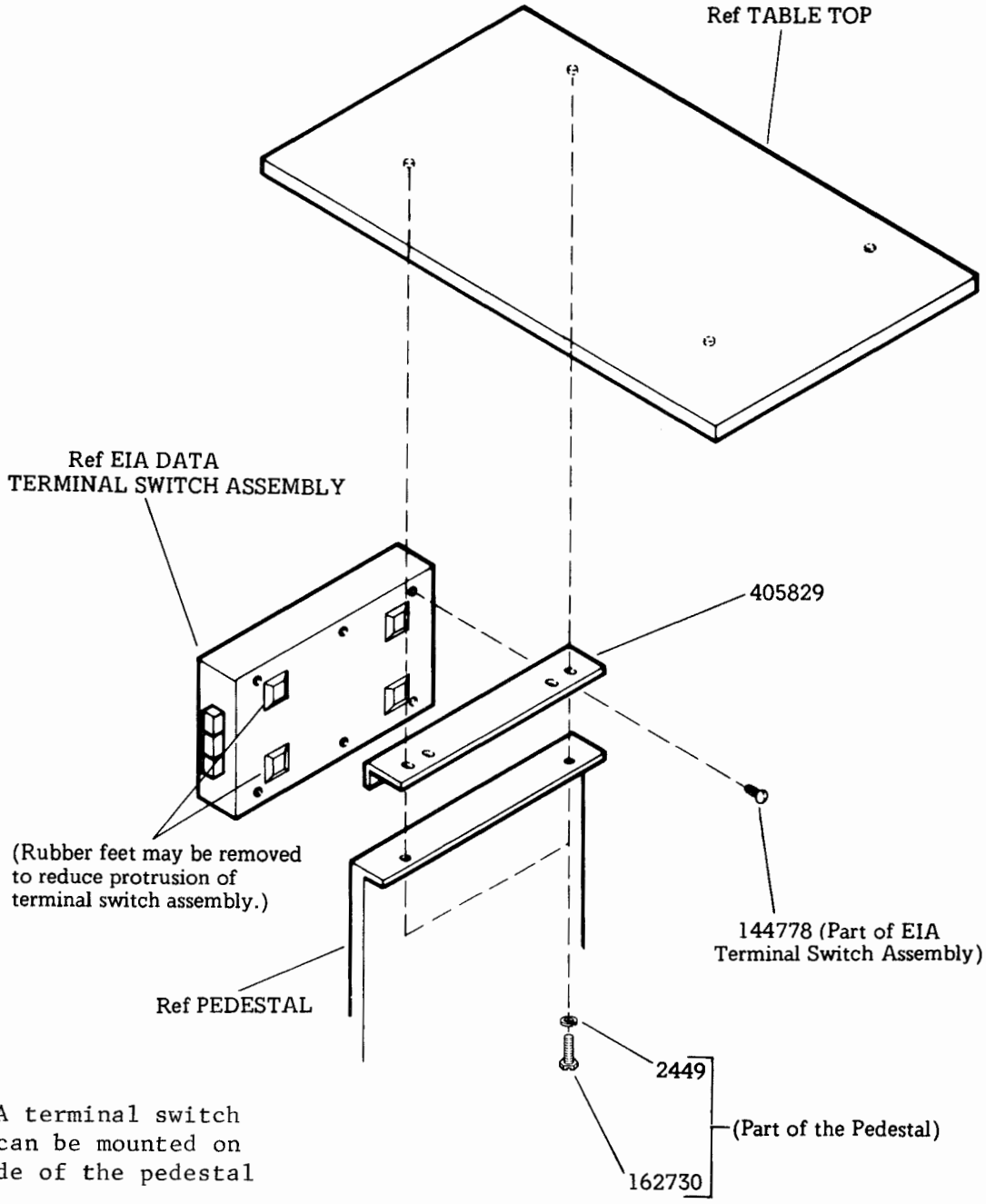

[redacted] NOTE: EIA terminal switch assembly can be mounted on either side of the pedestal

Mounting for the 345630 EIA Terminal Switch Assembly

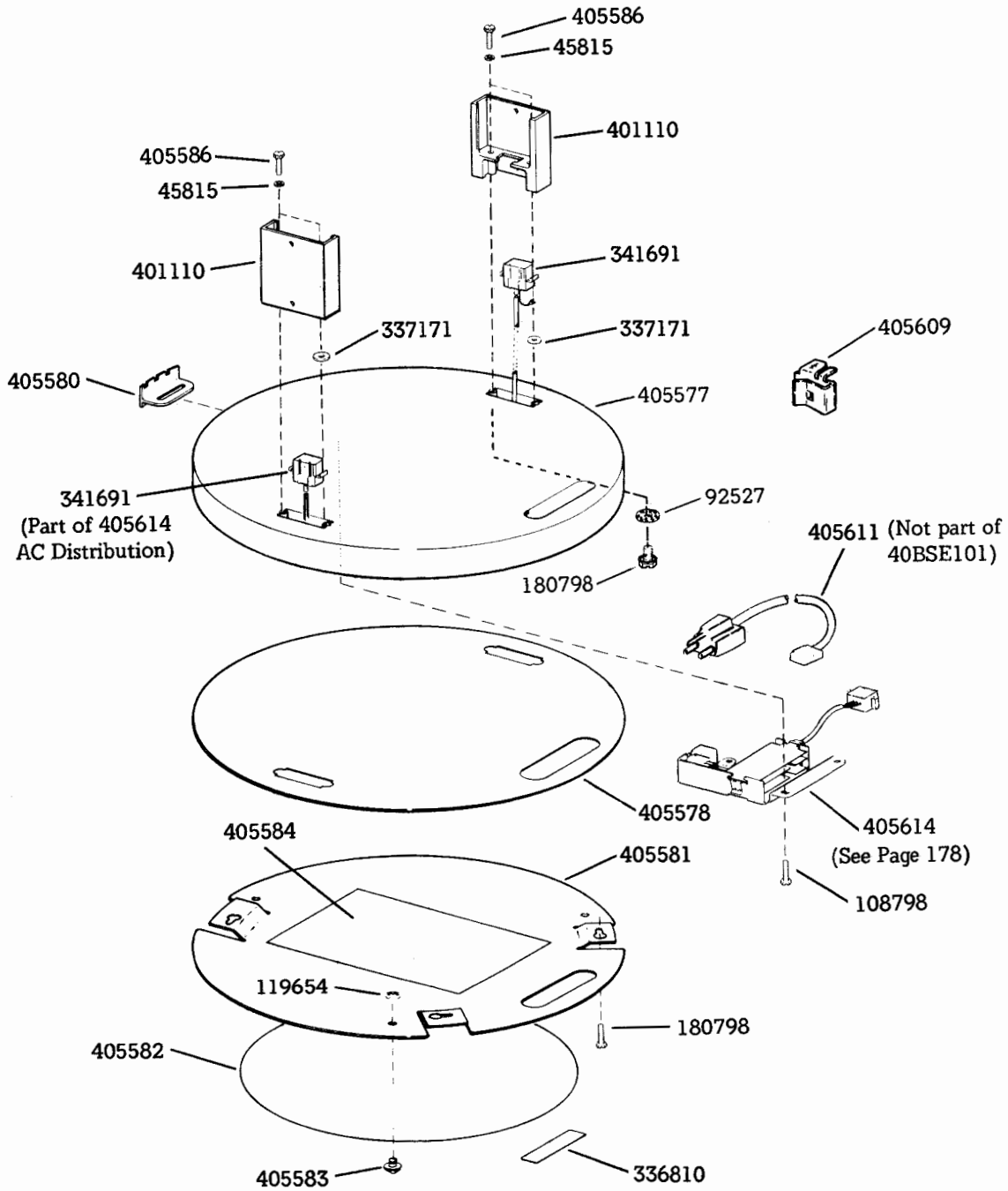

40BSE101 Monitor Base

F. DISASSEMBLY, REASSEMBLY, AND PARTS (Cont)

2. CABINETS, PAPER WINDERS, AND FACILITIES (Cont)

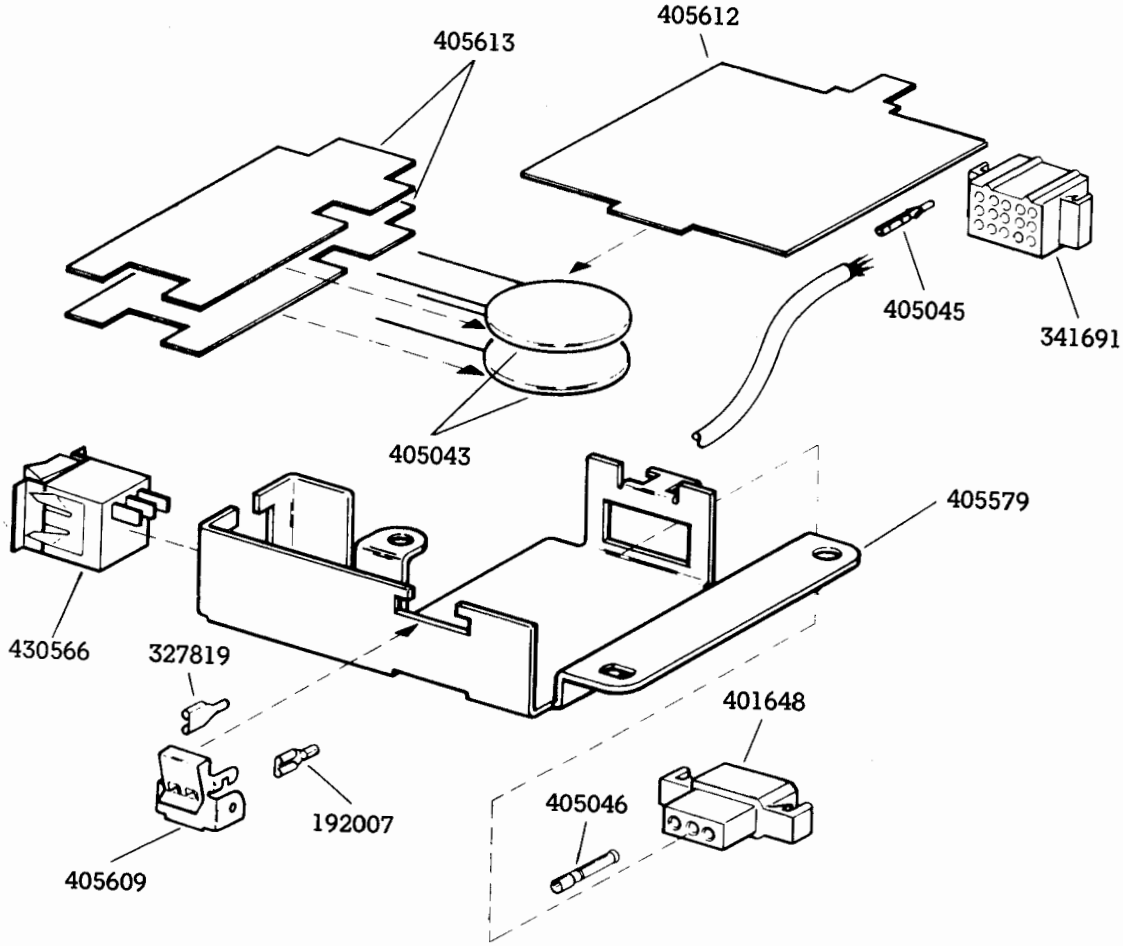

405614 AC Distribution Assembly

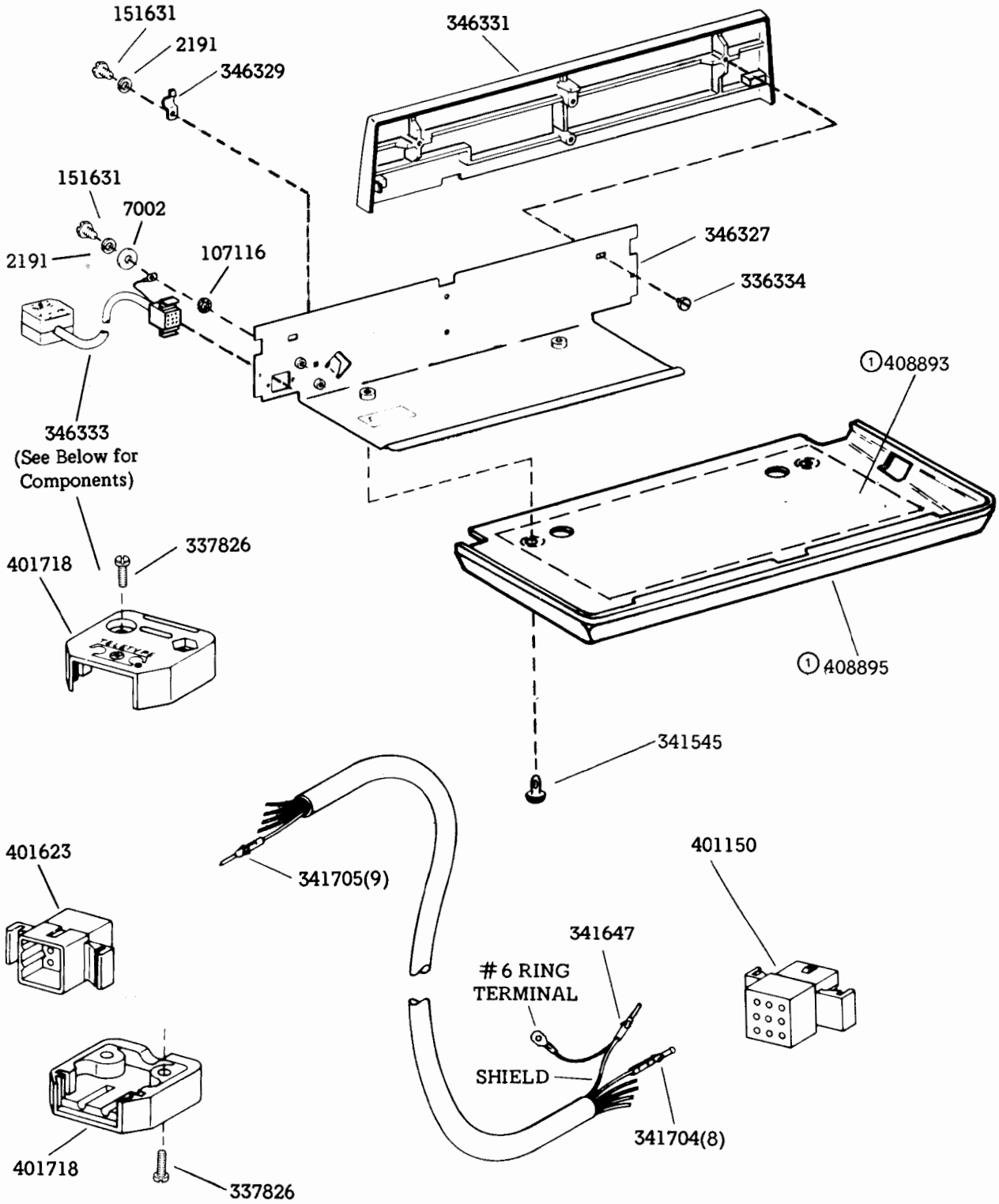

①408894 Cover W/Pad

40BSE201 Operator Console (KD) Base

F. DISASSEMBLY, REASSEMBLY, AND PARTS (Cont)

2. CABINETS, PAPER WINDERS, AND FACILITIES (Cont)

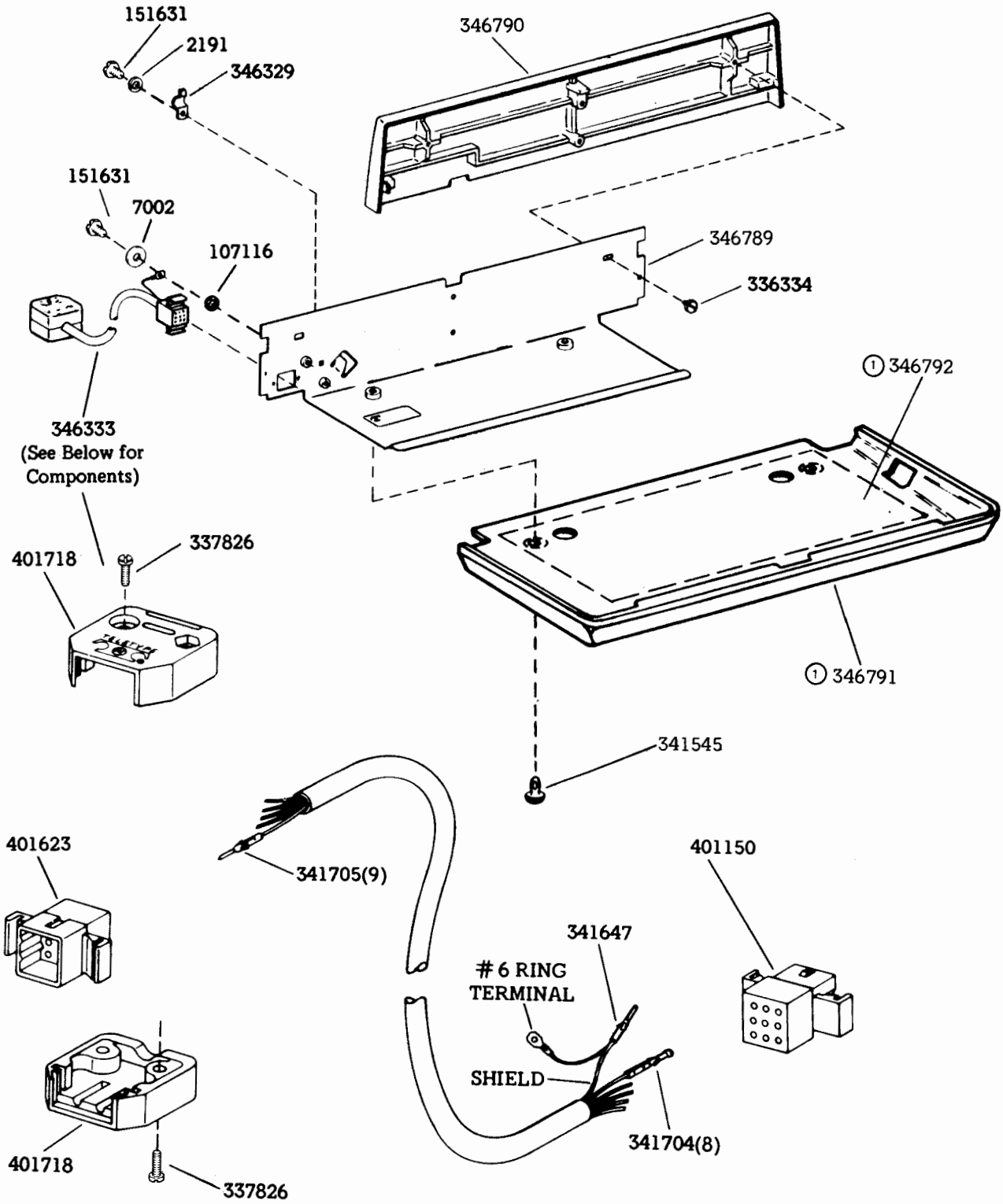

40BSE202 Operator Console (KD) Wide Base

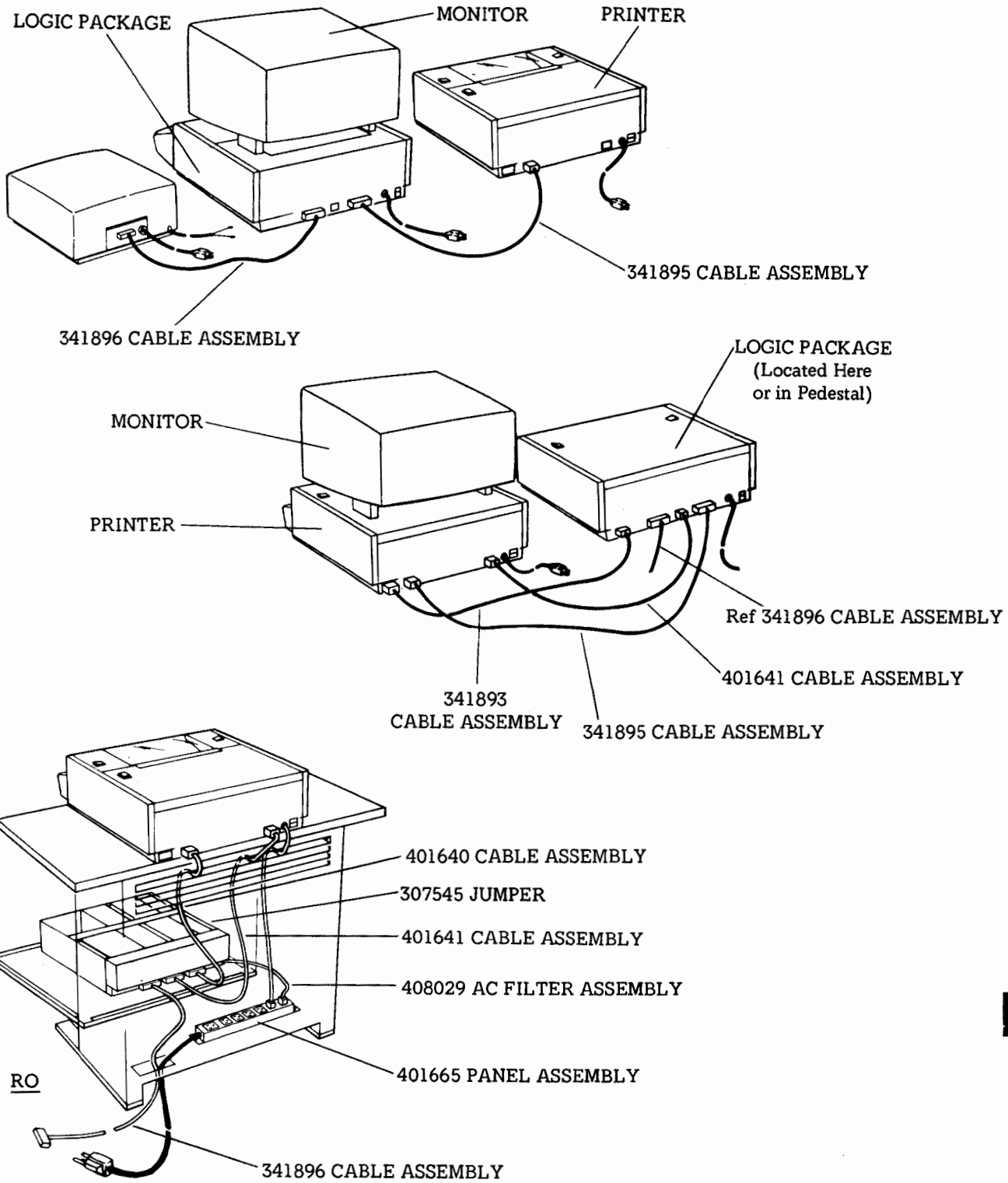

Interconnecting Cables for KDP and RO Sets

F. DISASSEMBLY, REASSEMBLY, AND PARTS (Cont)

2. CABINETS, PAPER WINDERS, AND FACILITIES (Cont)

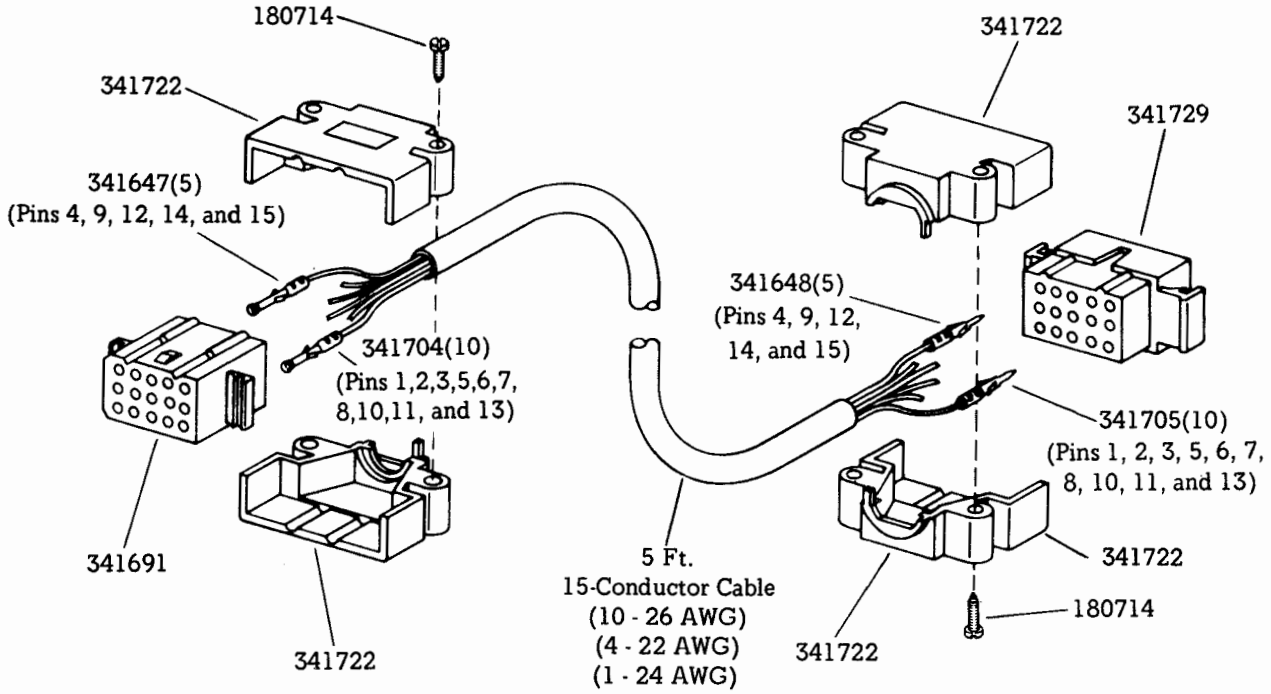

341893 Monitor Extension Cable Assembly

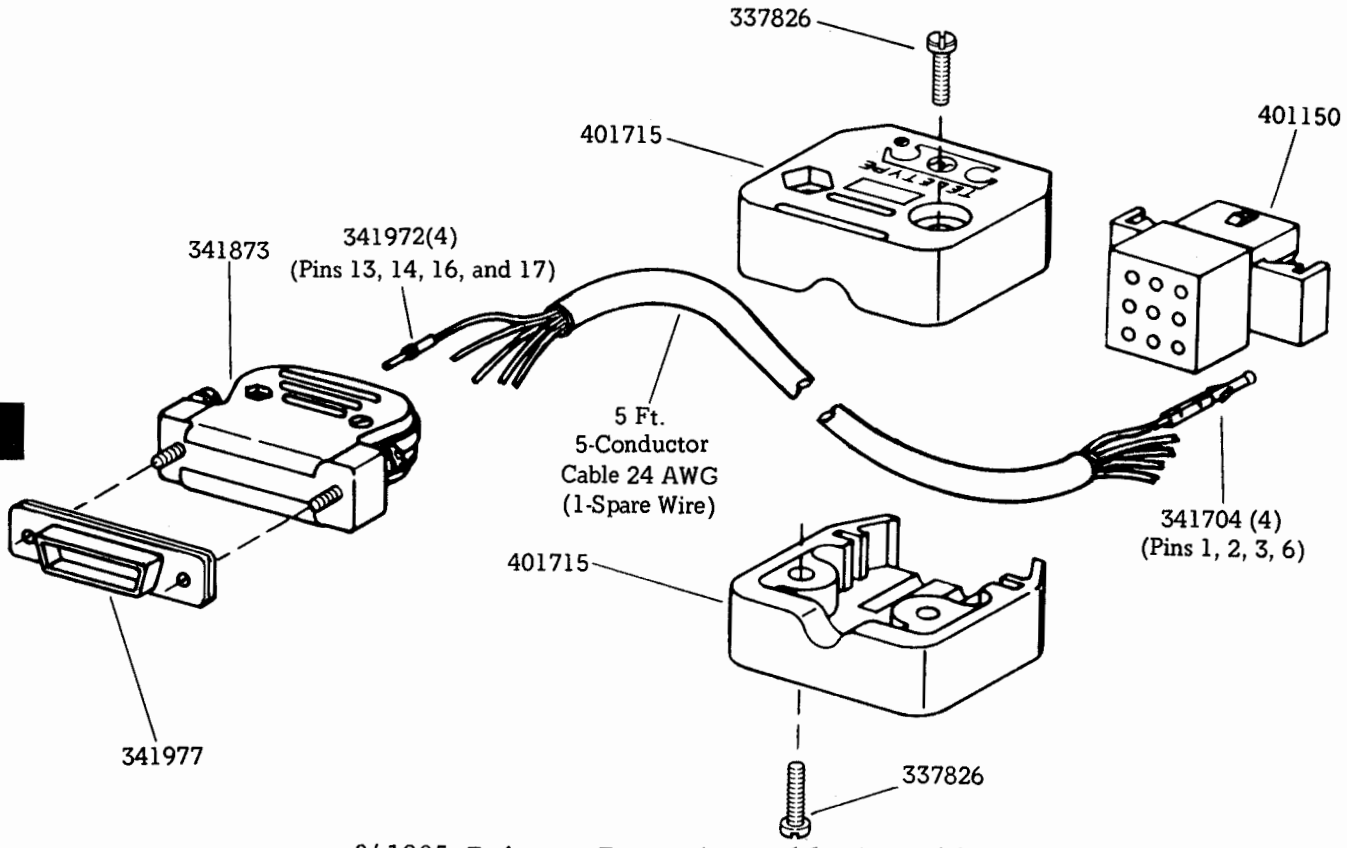

341895 Printer Extension Cable Assembly

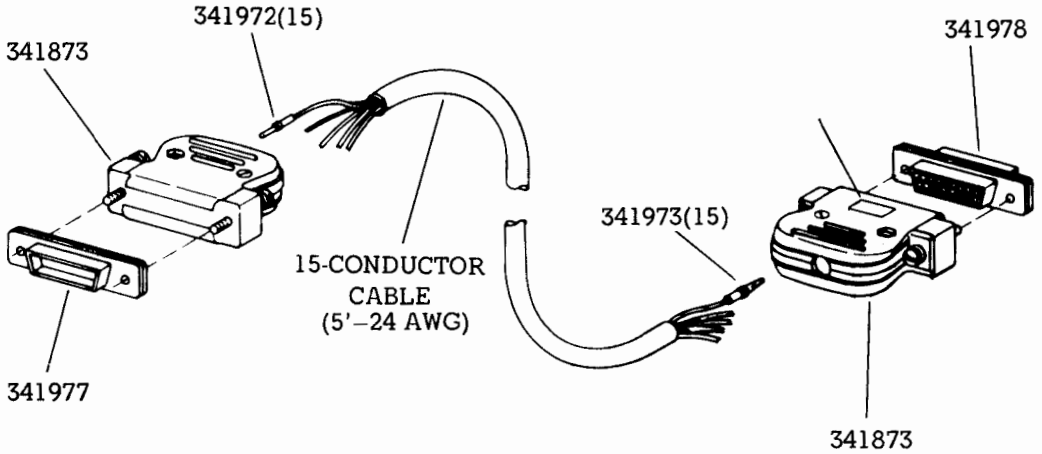

341896 Data Set Cable Assembly

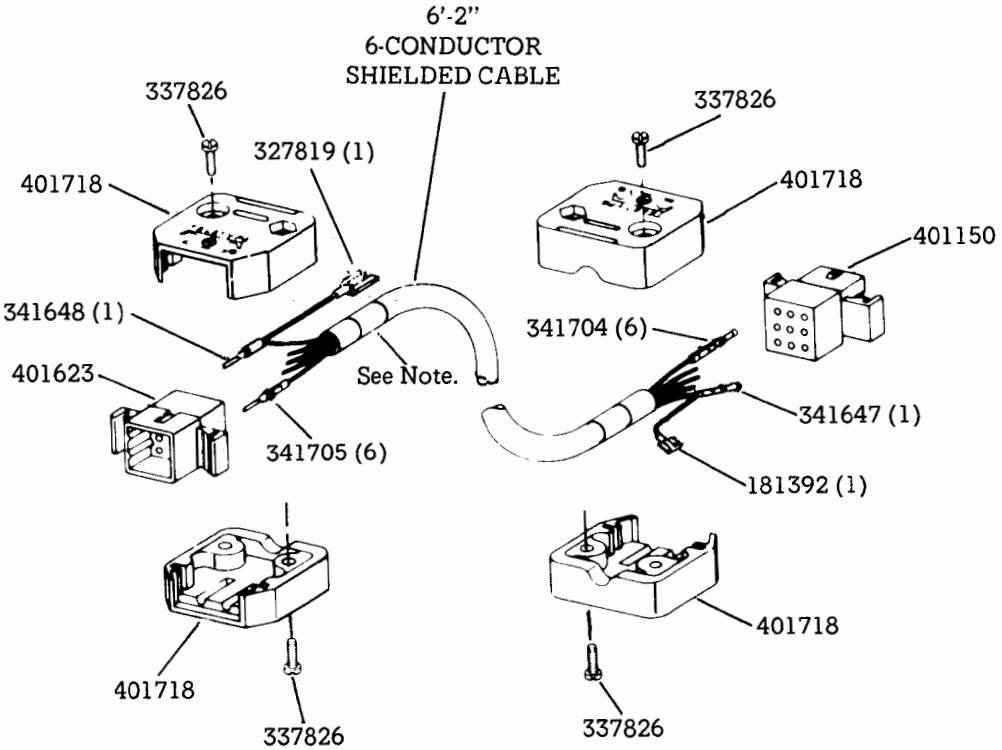

NOTE: Cable marker at each end identifies part number of cable.

401640 Printer Extension Cable Assembly

F. DISASSEMBLY, REASSEMBLY, AND PARTS (Cont)

2. CABINETS, PAPER WINDERS, AND FACILITIES (Cont)

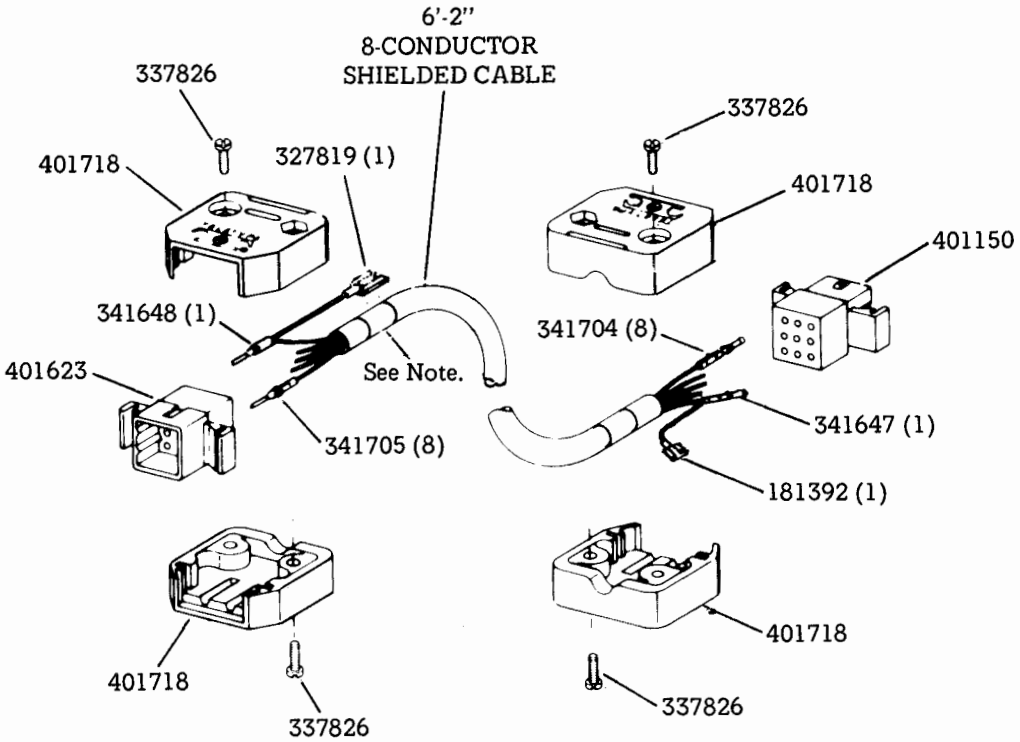

NOTE: Cable marker at each end identifies part number of cable.

401641 Opcon Extension Cable Assembly

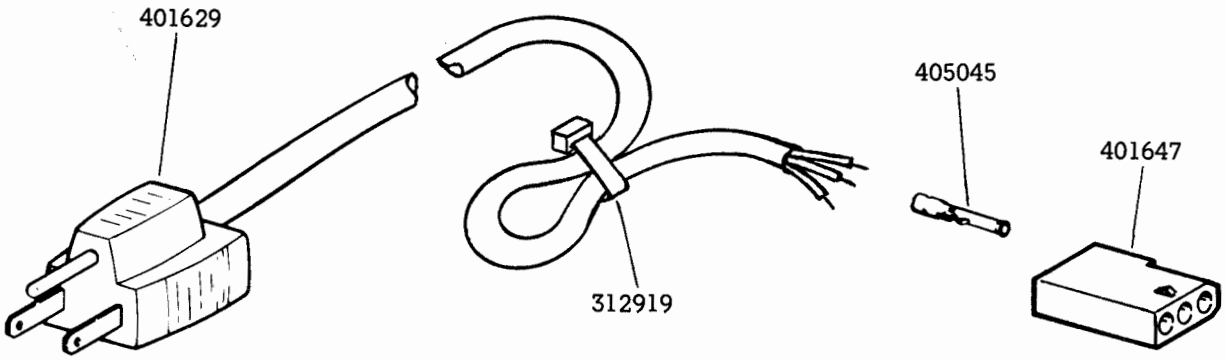

405611 AC Cord Assembly

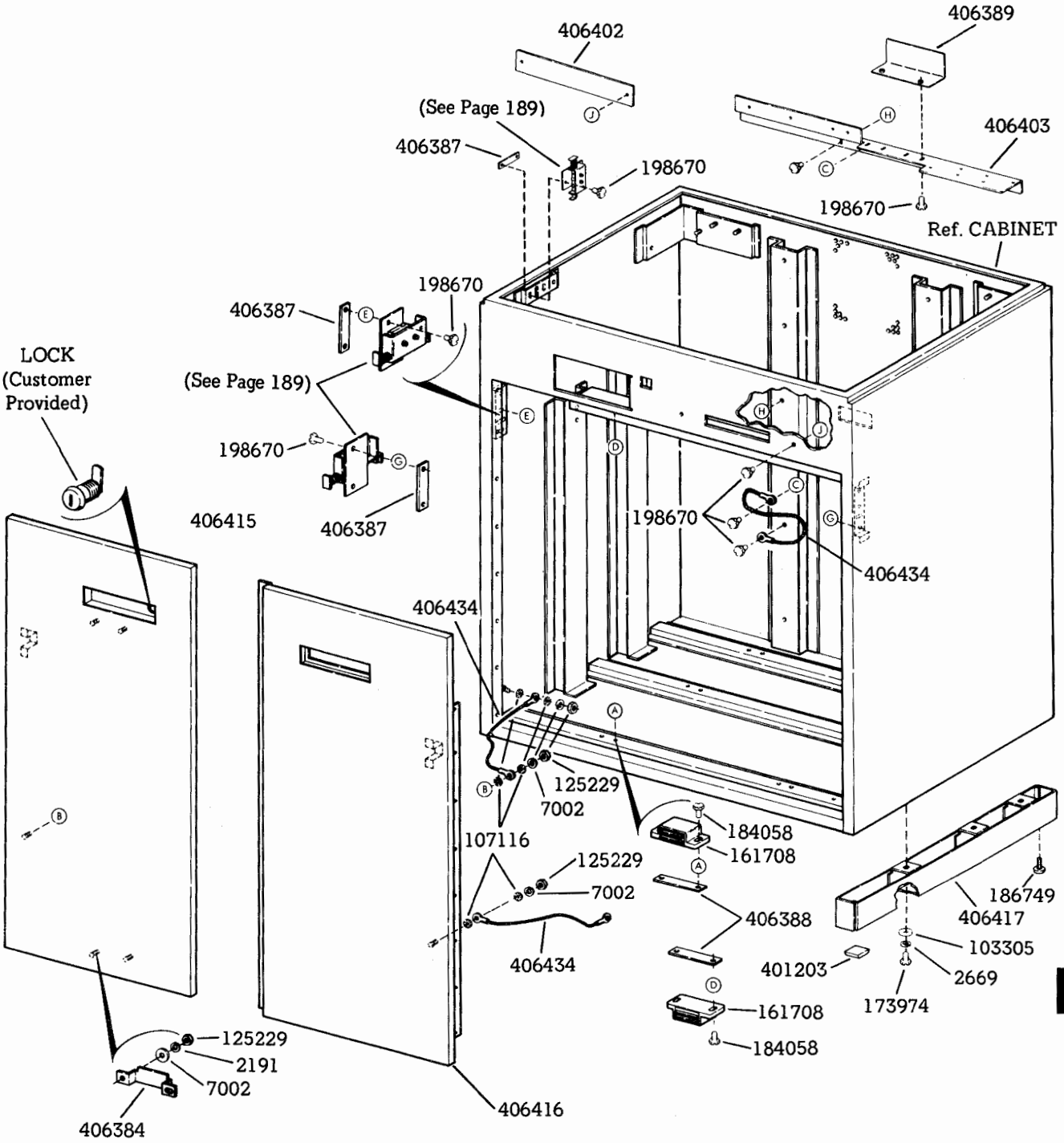

40CAB302/ZZ Printer Cabinet Core for Forms Access Printer Cabinet

F. DISASSEMBLY, REASSEMBLY, AND PARTS (Cont)

2. CABINETS, PAPER WINDERS, AND FACILITIES (Cont)

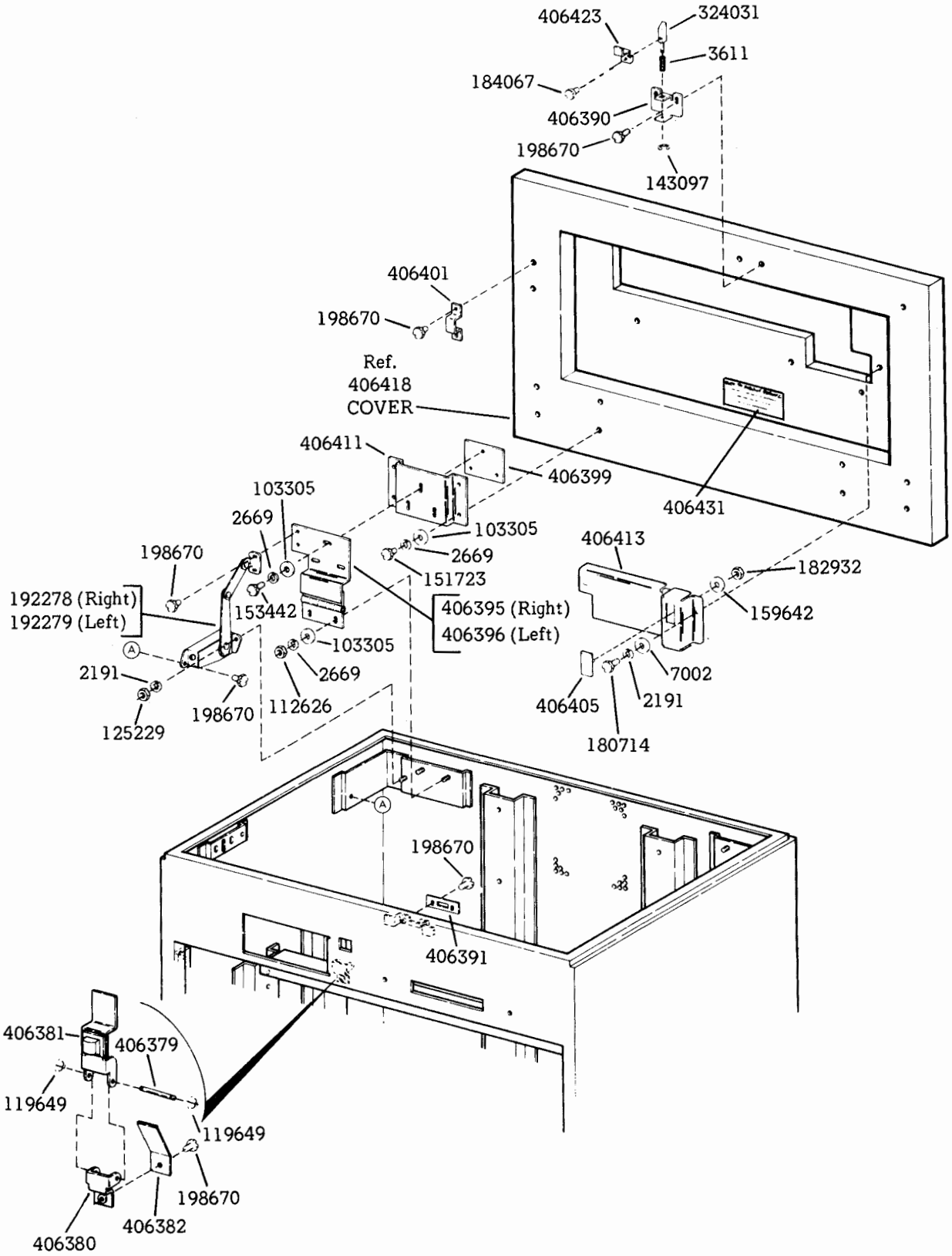

40CAB302/ZZ Printer Cabinet Core for Forms Access Printer Cabinet (Cont)

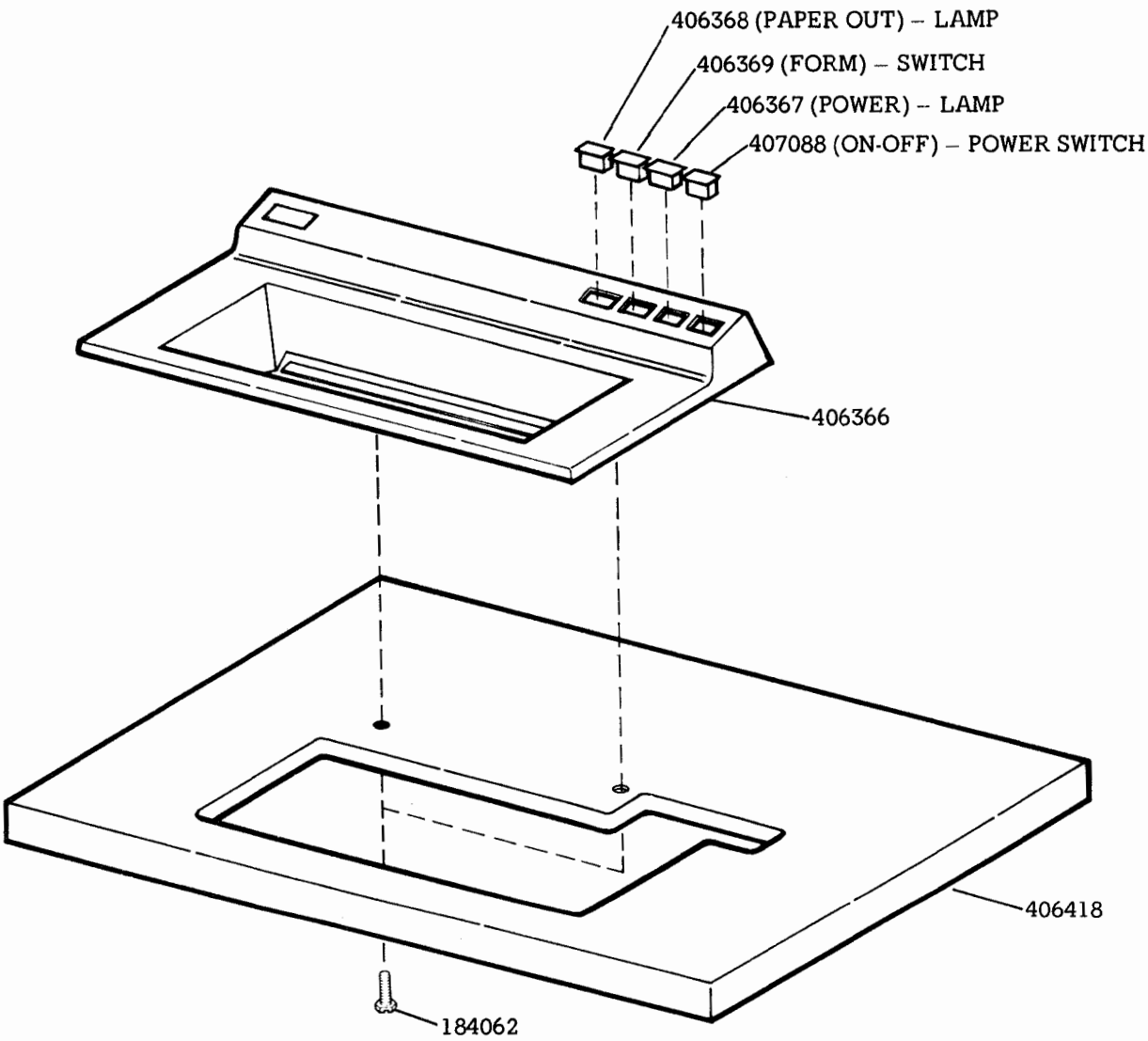

40CAB302/ZZ Printer Cabinet Core for Forms Access Printer Cabinet (Cont)

F. DISASSEMBLY, REASSEMBLY, AND PARTS (Cont)

2. CABINETS, PAPER WINDERS, AND FACILITIES (Cont)

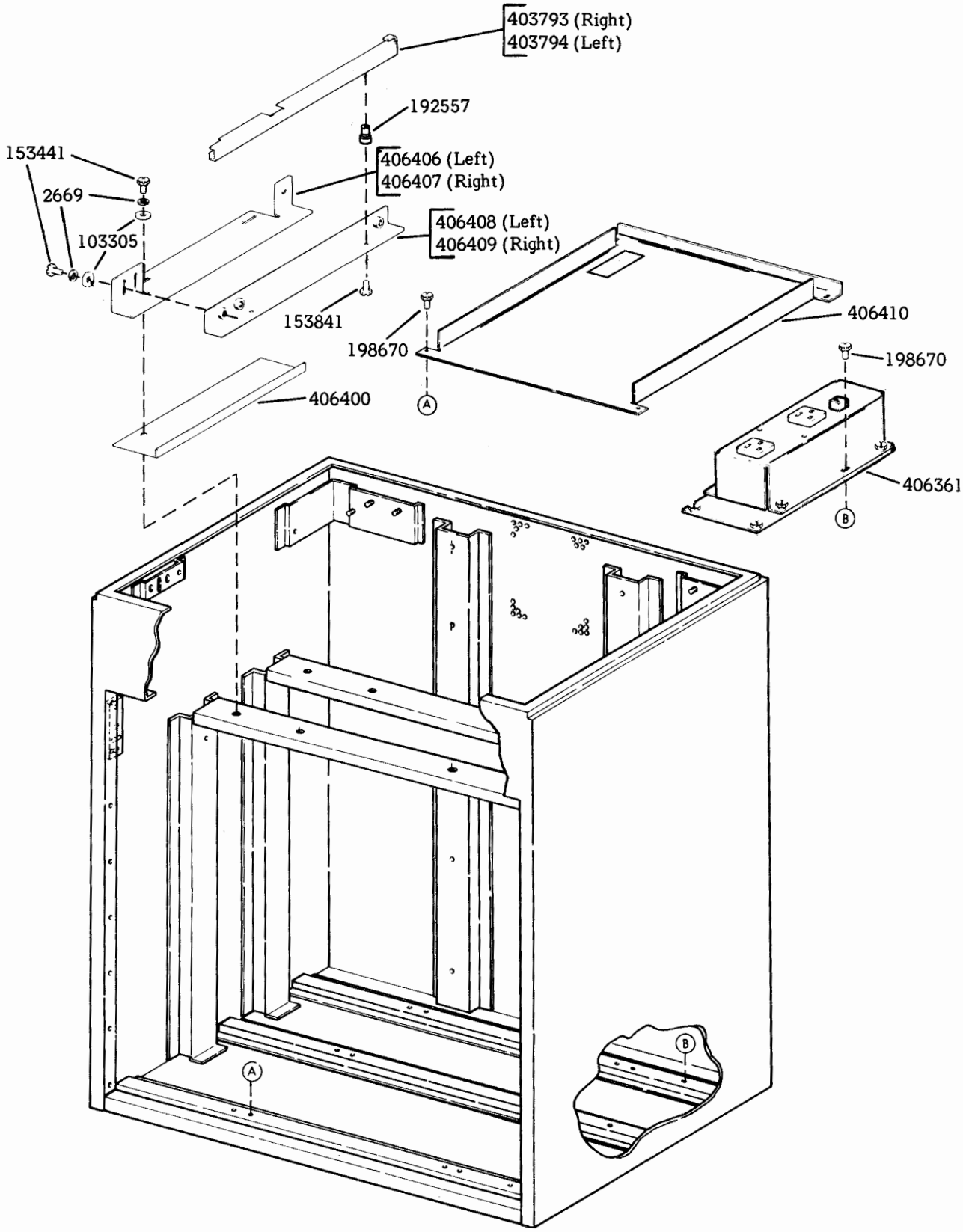

40CAB302/ZZ Printer Cabinet Core for Forms Access Printer Cabinet (Cont)

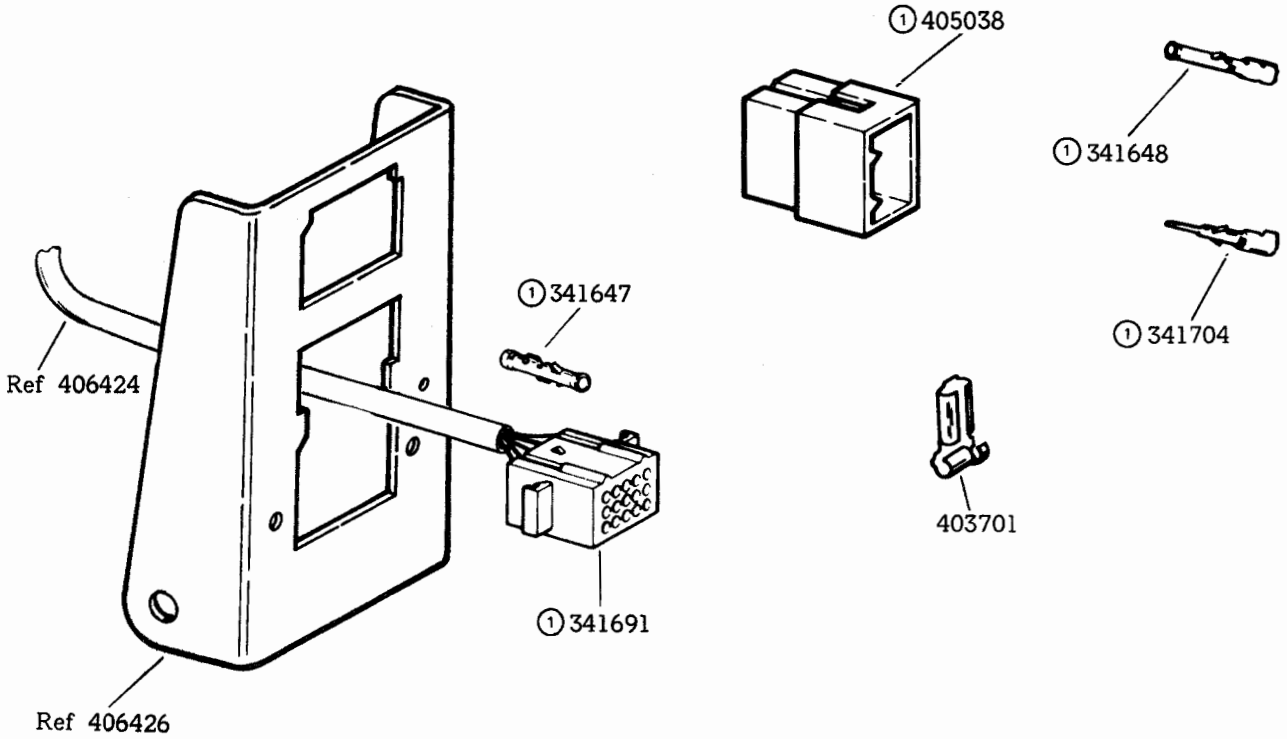

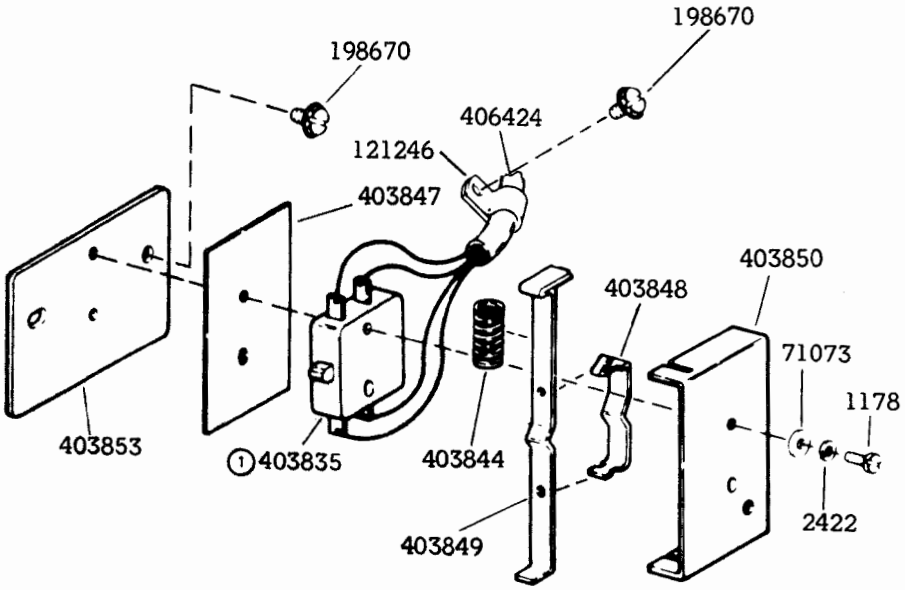

①Part of 406424 Cable

406432 Cable Assembly

F. DISASSEMBLY, REASSEMBLY, AND PARTS (Cont)

2. CABINETS, PAPER WINDERS, AND FACILITIES (Cont)

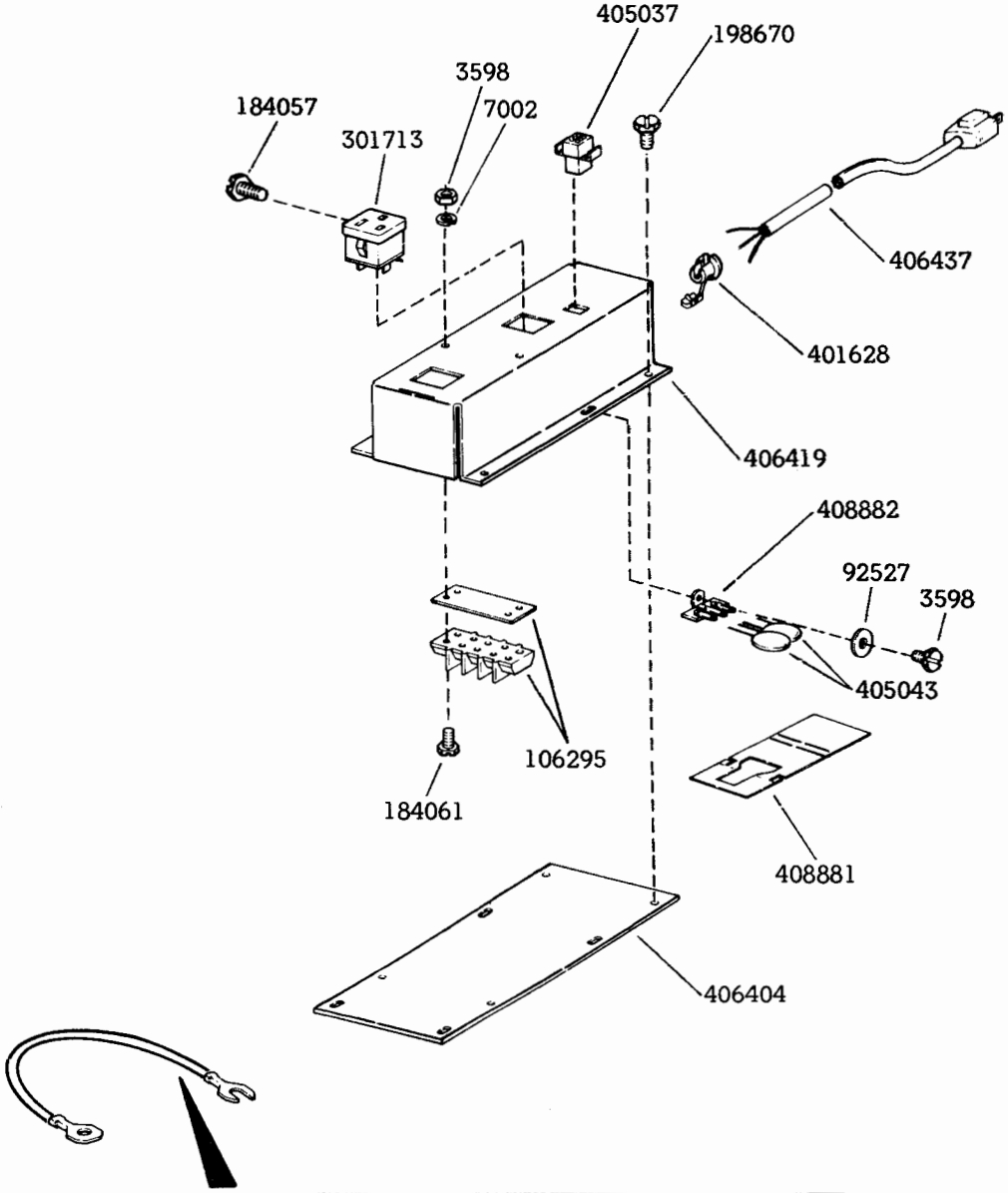

STRAP NO.	COLOR	LENGTH	TERMINAL
188990	W	5"	2
312301	R	6"	2
312574	BK	6"	1
318630	Braided	6"	2
325911	G	6-1/2"	1
326755	G	3-1/2"	1
400973	O	4-1/4"	2
406360	G	3-1/2"	2
406362	W	7"	3
406363	G	3"	1
406364	R	5"	2
406365	W	5"	1

406361 AC Distribution Assembly

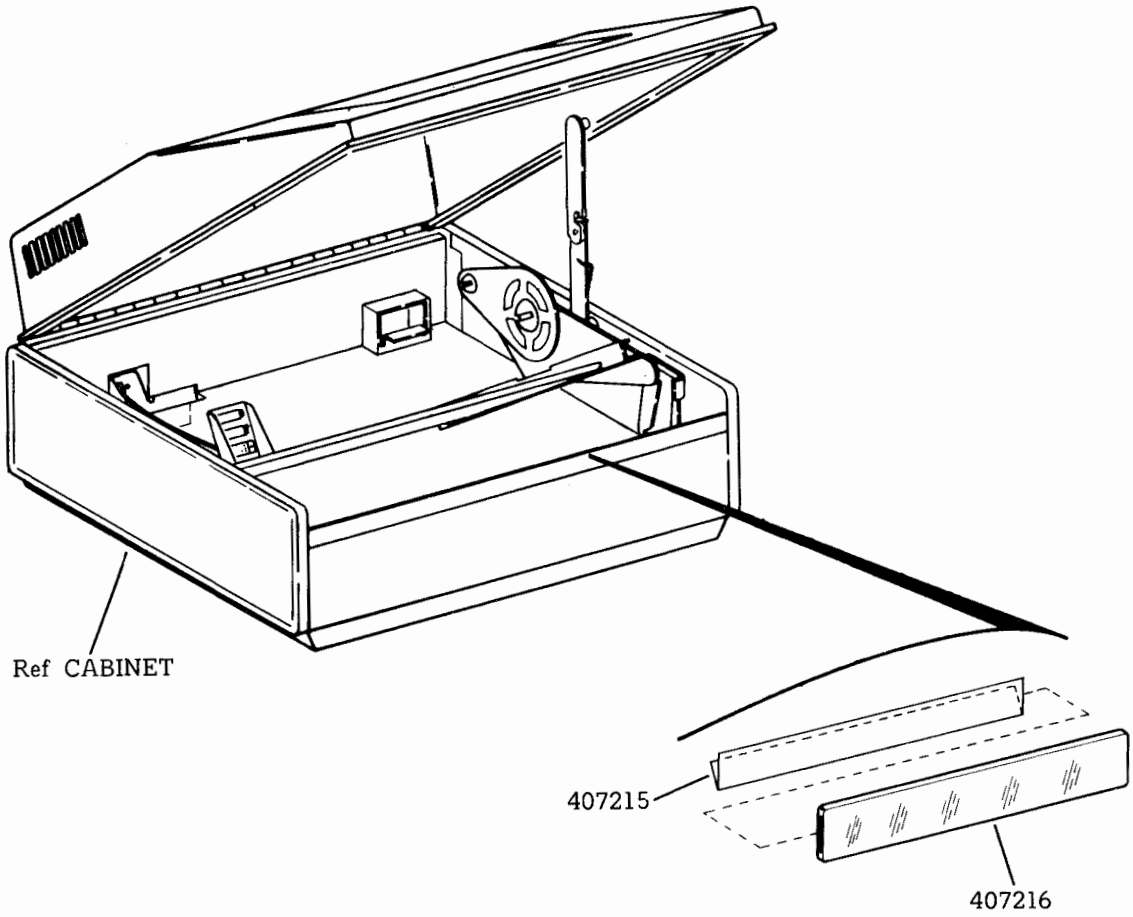

NOTE: The following 40-type units could make use of the 407216 holder and 407215 label:

40CAB201/AA, AC
40CAB251/AA, AB, AC
40CAB351/AA, AB, AC, AD, AE
40CAB353/AA, AB, AC, AD
40CAB371/AA, AB

Label and Label Holder for 40-Type Terminals

F. DISASSEMBLY, REASSEMBLY, AND PARTS (Cont)

2. CABINETS, PAPER WINDERS, AND FACILITIES (Cont)

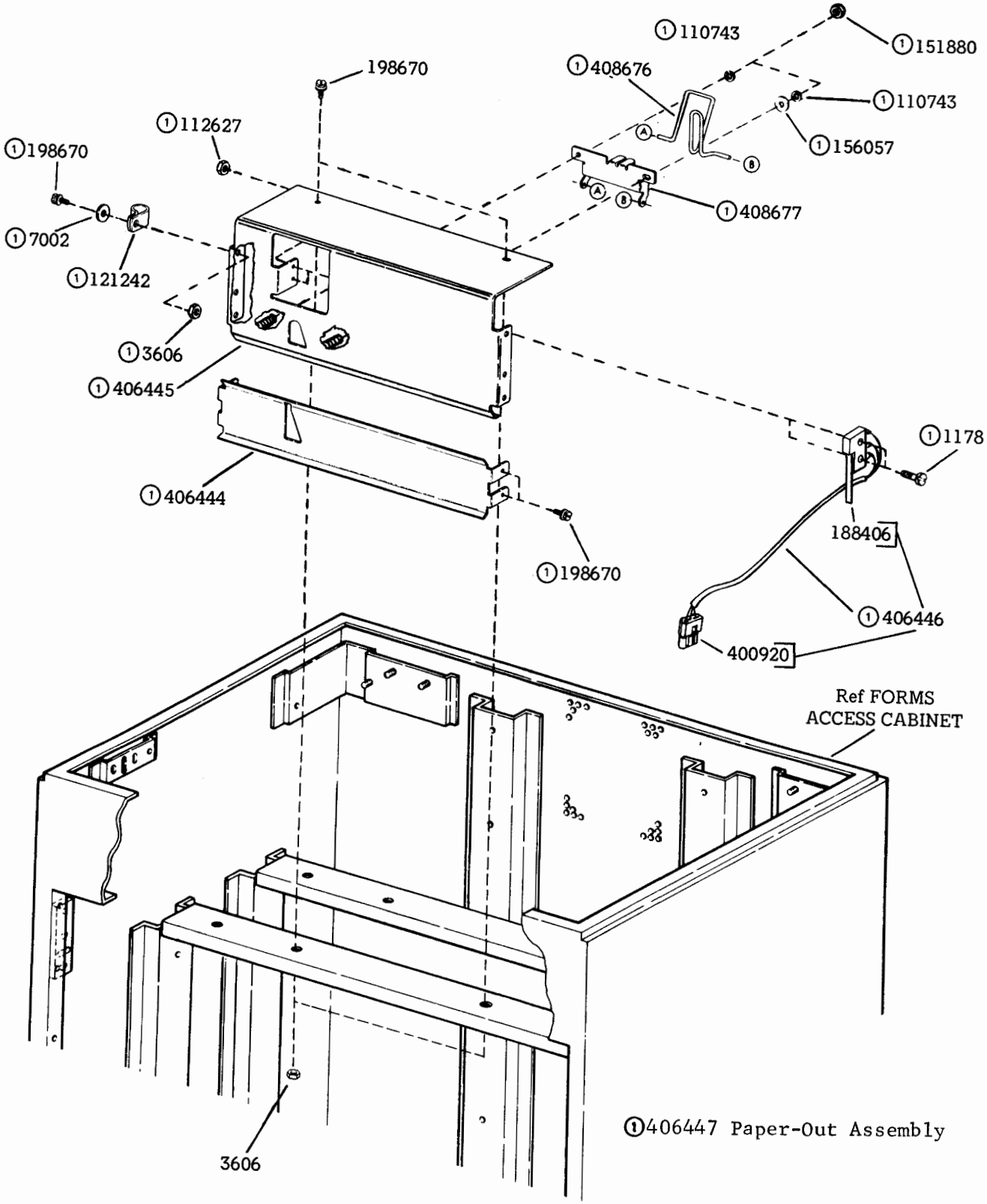

406374 Modification Kit to Provide Paper-Out Contact Closure 11 Inches Below Print Line in the Forms Access Printer Cabinet

Carefully remove the paper winder assembly, paper spool, and mounting frame from the carton and place on a suitable working surface near the cabinet.

Parts List

For 40PWU101, remove the loose parts from a muslin bag tied to the mounting frame. The loose parts consist of:

Qty	Part No.	Description
4	2191	Lockwasher
3	3646	Lockwasher
4	111427	Washer, Flat
4	151632	Screw
3	156768	Screw
3	181204	Washer, Flat
2	401203	Bumper
2	408898	Tape (3-inch length)

For 40PWU102, place the following parts on a suitable surface for assembly. The loose parts consist of the following:

Qty	Part No.	Description
2	2191	Lockwasher
*2	2322	Lockwasher
*2	2846	Washer, Flat
*4	3292	Nut
4	3646	Lockwasher
2	408898	Tape (3-inch length)
2	111427	Washer, Flat
2	151631	Screw, 6-40 Hex
4	156768	Screw, 8-32 Hex
4	181204	Washer, Flat
4	401203	Bumper
*2	407161	Leveler
*2	407162	Bumper
1	407478	Bracket, Right
1	407479	Bracket, Left

*Not used with 40CAB371 cabinets.

Assemble paper winder to cabinet as shown on following pages.

WARNING: AT NO TIME SHOULD THE CABINET BE LIFTED USING THE WINDER FRAME AS ONE END OF THE LIFTING SURFACE.

The 40CAB251/AA cabinets are equipped with a 402143 cable clamp. Remove the cable clamp and cut off approximately 1/2 inch of the right side using a diagonal cutter. Replace the cable clamp.

F. DISASSEMBLY, REASSEMBLY, AND PARTS (Cont)

2. CABINETS, PAPER WINDERS, AND FACILITIES (Cont)

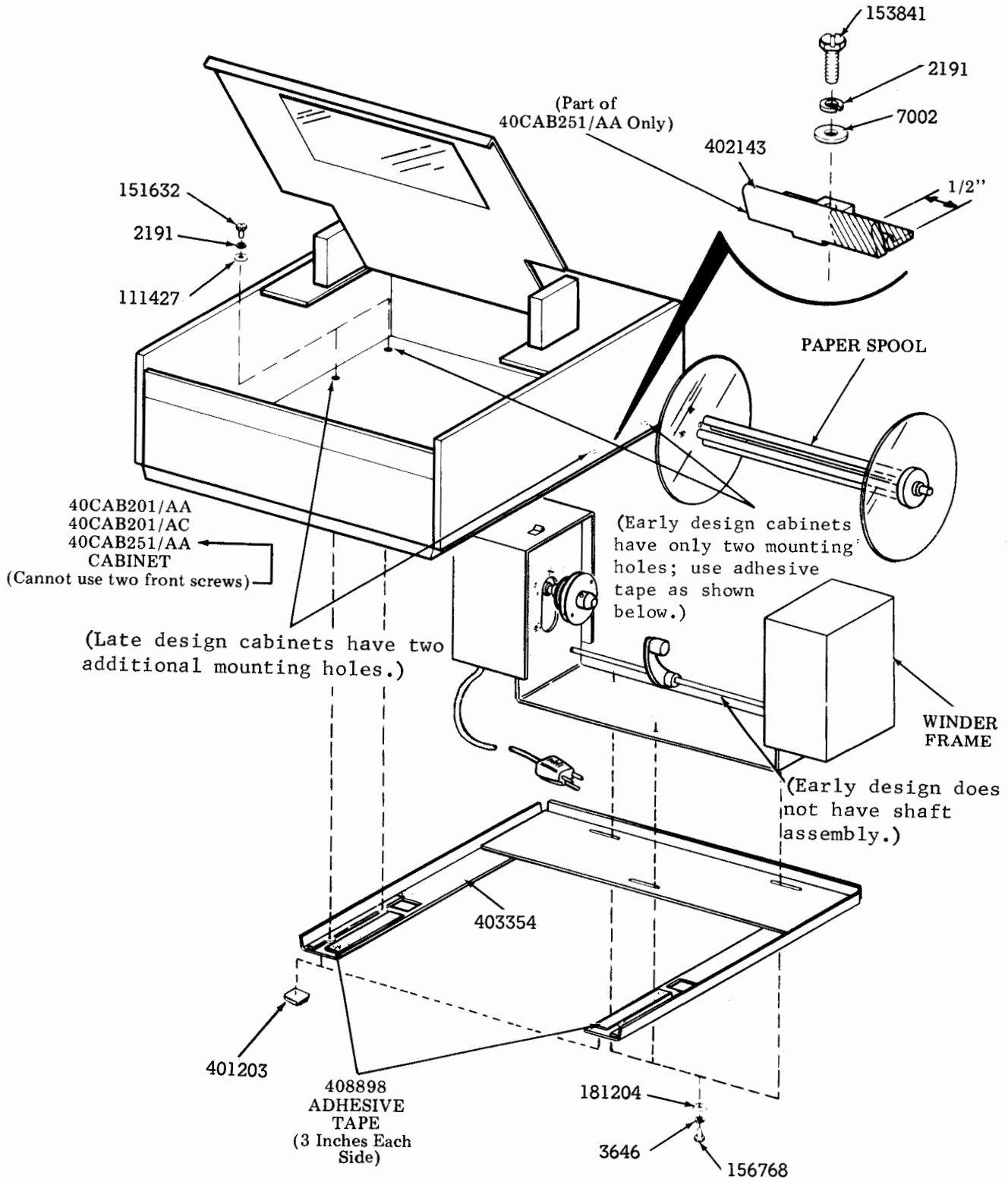

40PWU101 Paper Winder Mounted Under Cabinet (17-Inch Wide)

NOTE: For 40CAB201/AA/AC and 40CAB251/AA cabinets, two leveling feet are to be installed in the holes located at each front corner of the cabinet. Adjust the levelers to meet the difference in height by raising and lowering the nut located outside of the cabinet.

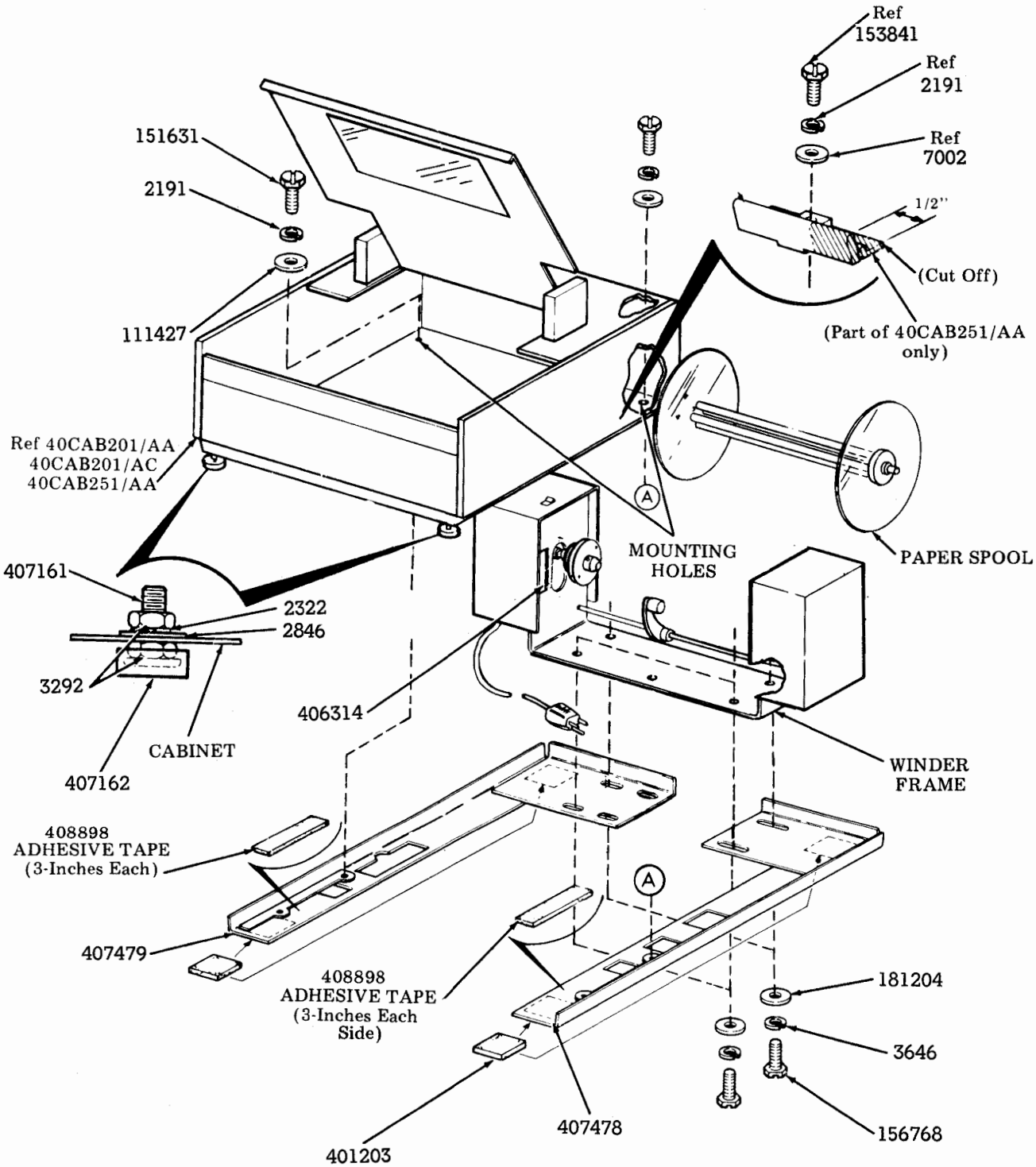

40PWU102 Paper Winder Mounted Under Cabinet (17-Inch Wide)

F. DISASSEMBLY, REASSEMBLY, AND PARTS (Cont)

2. CABINETS, PAPER WINDERS, AND FACILITIES (Cont)

NOTE: The 40CAB371/AA cabinet has its own leveling feed and can be adjusted for any difference in height; therefore, the leveling feet required for other cabinets are not used.

Fan duct must be removed to gain access to left rear hole. Replace after mounting paper winder.

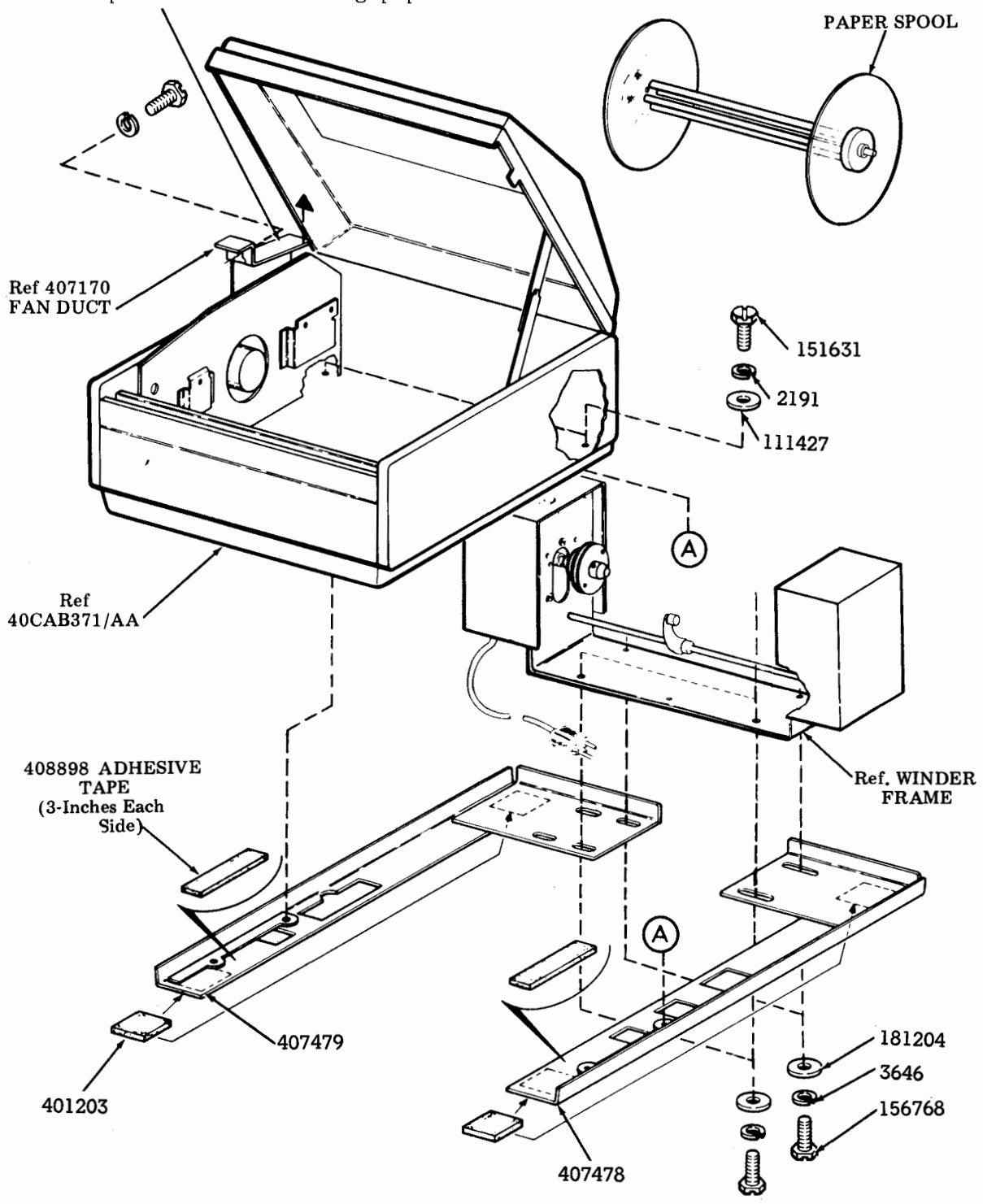

40PWU102 Paper Winder Mounted Under Cabinet (20-Inch Wide)

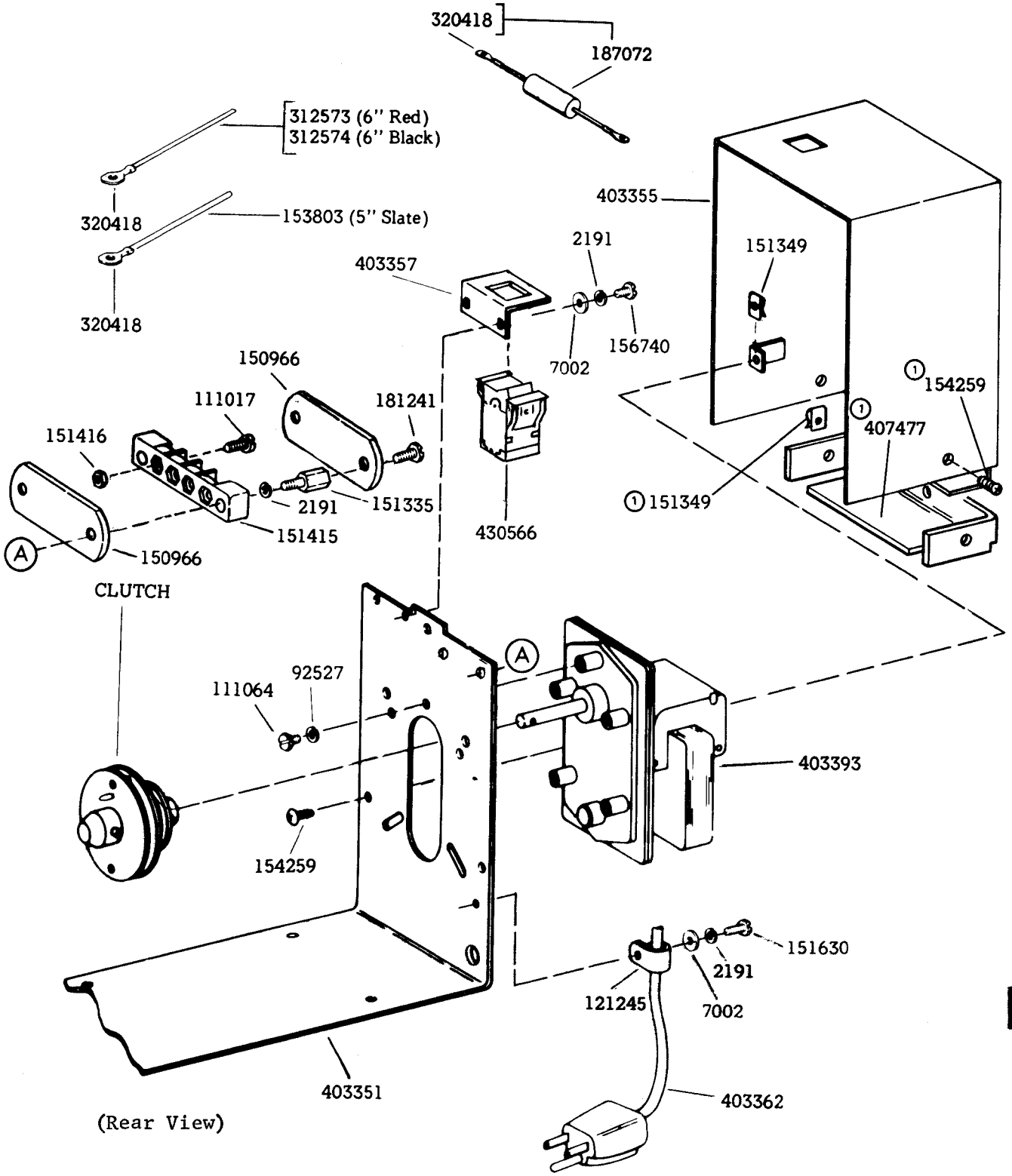

①Used on early design unit.

Motor

F. DISASSEMBLY, REASSEMBLY, AND PARTS (Cont)

2. CABINETS, PAPER WINDERS, AND FACILITIES (Cont)

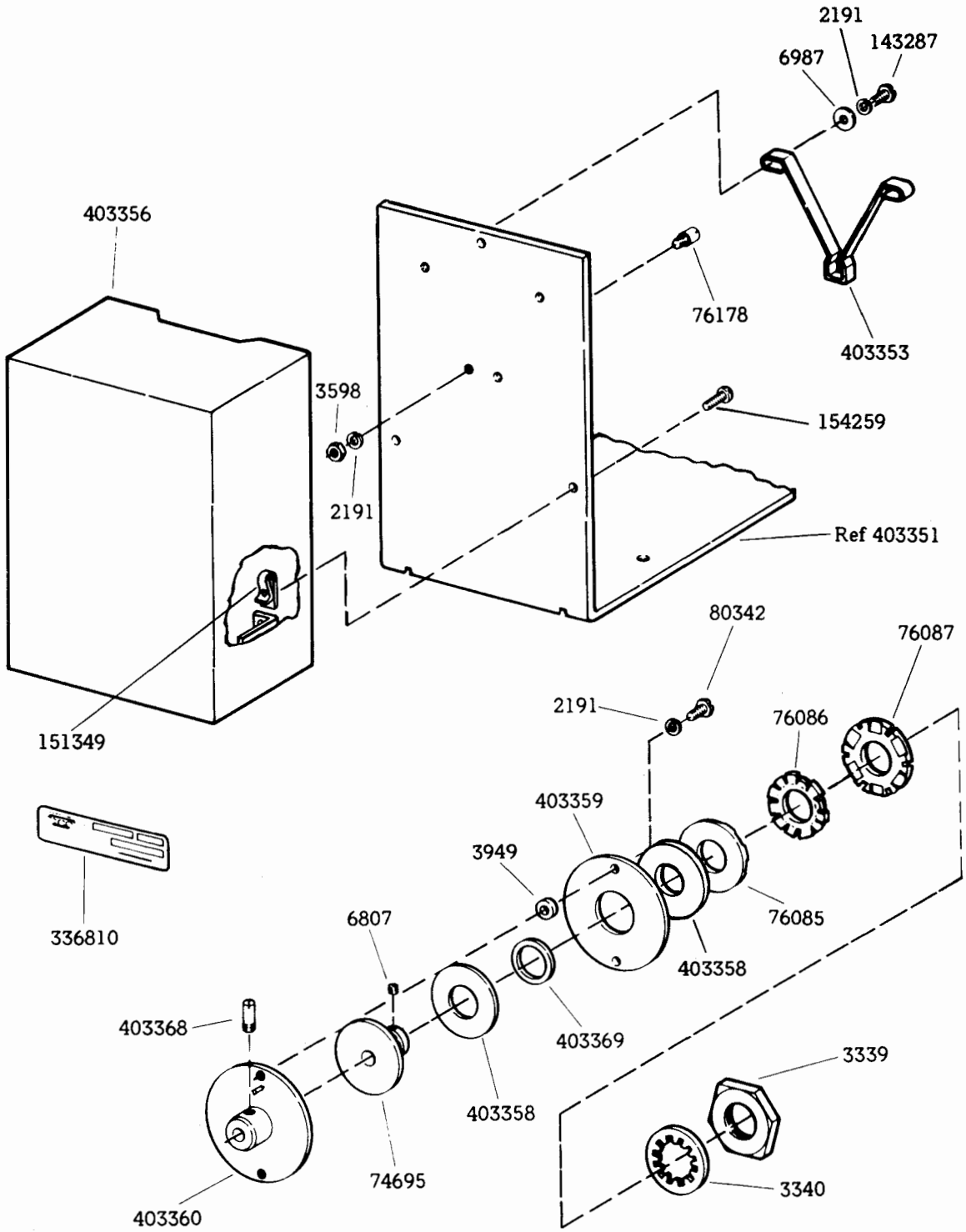

(Rear View)

Clutch Mechanism

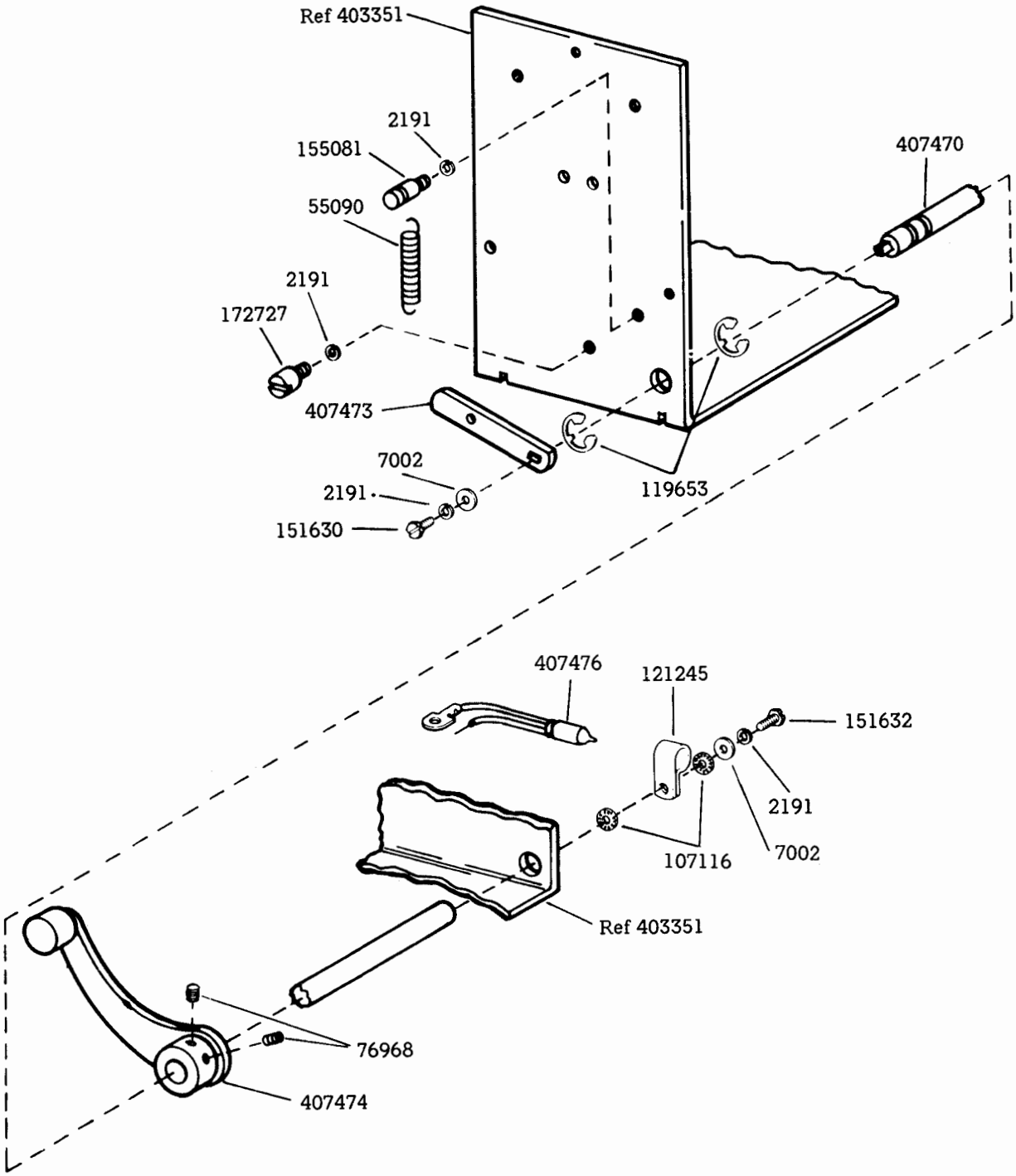

Paper Sensing Arm Mechanism (Late Design)

F. DISASSEMBLY, REASSEMBLY, AND PARTS (Cont)

2. CABINETS, PAPER WINDERS, AND FACILITIES (Cont)

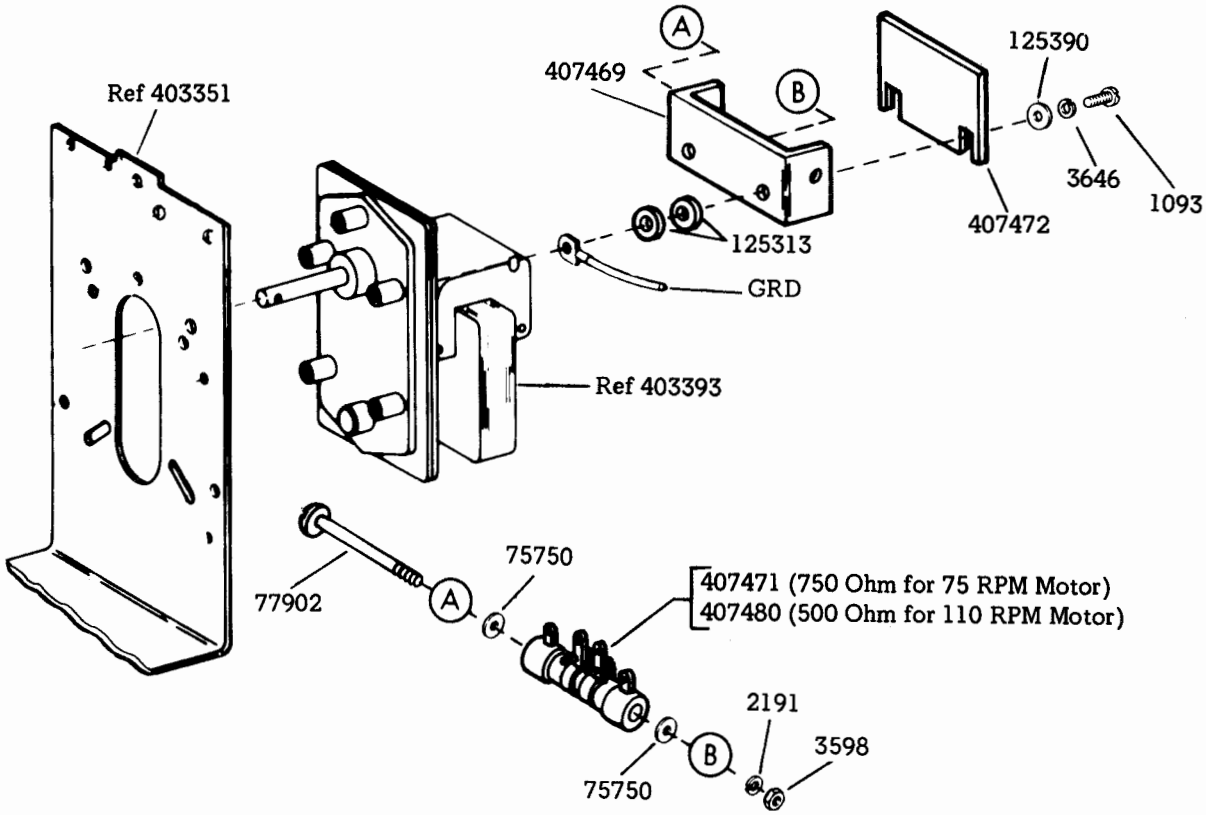

Variable Resistor (Late Design)

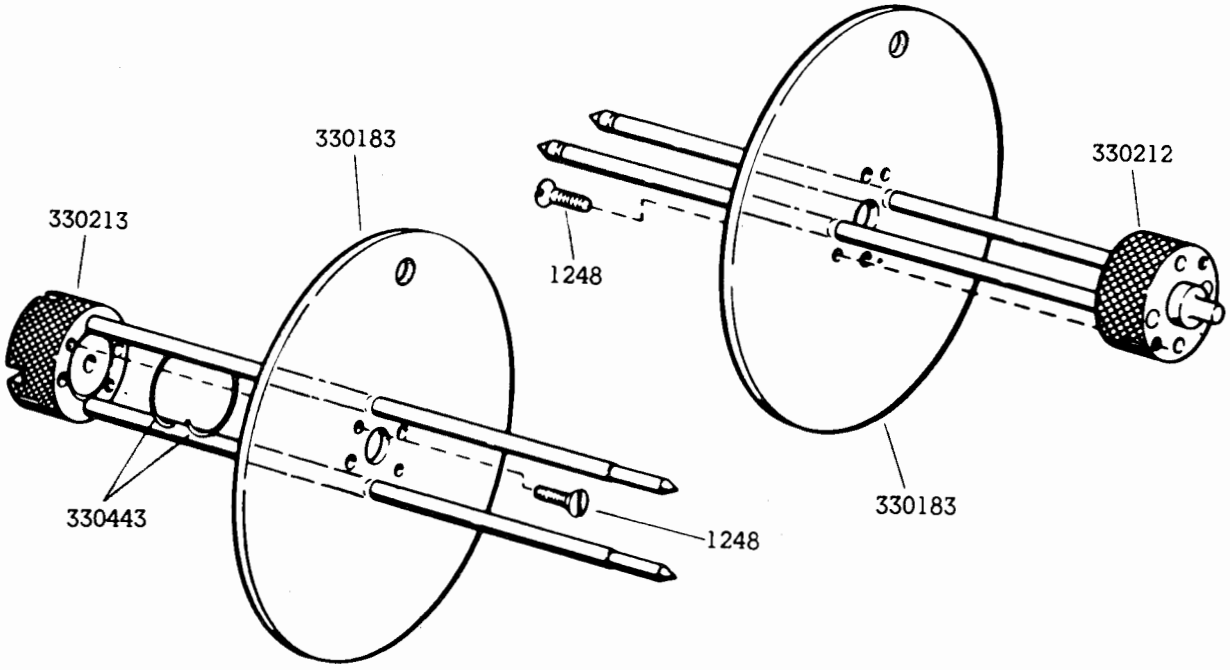

Paper Spool

3. NUMBERICAL INDEX

NOTE: When ordering parts prefix each number with the letters "TP" unless specified otherwise.

PART NO.	DESCRIPTION AND PAGE NO.
1028	Screw, 4-40 x 1/4 fil 157
1093	Screw, 8-32 x 7/16 fil 161, 200
1163	Screw, 4-40 x 3/16 fil 115
1178	Screw, 2-56 x 7/16 fil 142, 189, 192
1248	Screw, 6-40 x 1/2 flat 200
1264	Screw, 10-32 x 1/2 flat 155
2191	Lockwasher 83, 95, 96, 111, 113, 115, 117, 121, 128, 135, 136, 138, 143, 144, 147, 149, 150, 157, 165, 166, 167, 168, 179, 180, 185, 186, 194, 195, 196, 197, 198, 199, 200
2322	Lockwasher 135, 138, 155, 195
2382	Lockwasher 109
2422	Lockwasher 142, 189
2449	Lockwasher 92, 94, 116, 160, 161, 173, 175, 176
2658	Nut, 6-32 hex 90, 132
2669	Lockwasher 155, 185, 186, 188
2719	Washer, flat 161
2846	Washer, flat 195
3292	Nut, 1/4-20 hex 195
3339	Nut, 9/16-32 hex 198
3340	Lockwasher 198
3438	Washer, flat 139
3598	Nut, 6-40 hex 83, 95, 96, 109, 115, 117, 119, 121, 135, 136, 138, 143, 144, 145, 146, 147, 150, 163, 165, 168, 190, 198, 200
3599	Nut, 4-40 hex 153, 166
3606	Nut, 6-40 hex 103, 166, 192
3611	Spring 186
3640	Lockwasher 90, 109, 115, 130, 136, 140, 149, 150, 153, 154, 158, 166
3646	Lockwasher 115, 140, 153, 194, 195, 196, 200
3949	Spacer, .160" thk 198
5599	Nut, 8-32 hex 115
6345	Nut, 6-32 hex 111, 116, 117, 120
6807	Setscrew, 6-40 198
6987	Washer, flat 198
7002	Washer, flat 95, 113, 128, 135, 138, 149, 157, 165, 167, 168, 179, 180, 185, 186, 190, 192, 194, 195, 197, 199
8449	Spacer, .094" thk 166
44048	Washer, flat 171
45815	Lockwasher 110, 115, 118, 124, 136, 140, 148, 152, 153, 177
55063	Spring 154
55090	Spring 199
55219	Screw, 8-32 x 3/8 fil 161
71073	Washer, flat 142, 189
74695	Sleeve, clutch 198
75750	Washer, insulating 200
76084	Washer, spring 174
76085	Disc, friction 198
76086	Washer, spring 198
76087	Nut, 9/16-32 friction 198
76099	Washer, flat 111, 117
76178	Stud 198
76461	Washer, flat 111, 117
76953	Washer, flat 134, 139
76968	Setscrew, 6-32 199
77902	Screw, 6-40 x 2-3/8 rd 200
78858	Washer, flat 166
80342	Screw, 6-40 x 23/64 hex 198
82832	Lockwasher 160, 161, 173
83885	Nut, 6-32 hex 168
84226	Spring 115
84579	Washer, flat 109, 120
85471	Screw, 10-32 x 1 hex 118, 126
90951	Lockwasher 157, 166
92146	Nut, 1/4-20 hex 116
92260	Lockwasher 109, 145, 164, 168

F. DISASSEMBLY, REASSEMBLY, AND PARTS (Cont)

3. NUMERICAL INDEX (Cont)

PART NO.	DESCRIPTION AND PAGE NO.
92527	Lockwasher 111, 117, 120, 159, 161, 171, 177, 190, 197
93582	Washer, flat 120, 136, 140, 146, 152, 153
93984	Lockwasher 83, 90, 113, 151, 166
97402	Screw, 6-40 shoulder 136
98642	Lockwasher 118, 124
100848	Screw, 1/4-20 x 1 hex 135, 138, 155
103305	Washer, flat 185, 186, 188
104807	Washer, flat 119, 136, 140, 146, 154
106295	Block, terminal 190
107116	Lockwasher 85, 86, 87, 88, 89, 113, 116, 119, 132, 146, 149, 150, 157, 158, 163, 166, 179, 180, 185, 199
110126	Lockwasher 135, 138, 152, 153, 161
110434	Screw, 4-40 x 3/16 fil 166
110435	Nut, 4-40 hex 157
110446	Nut, 2-56 hex 131
110743	Lockwasher 192
111017	Screw, 6-40 x 5/16 fil 197
111064	Screw, 8-32 x 3/8 rd 197
111427	Washer, flat 194, 195, 196
112626	Nut, 10-32 hex 110, 155, 186
112627	Nut, 2-56 hex 192
116783	Holder, fuse 159
116793	Lockwasher 149, 150, 151, 158, 161
117535	Washer, flat 115, 118, 124, 147
119648	Ring, retaining 96, 165
119649	Ring, retaining 111, 115, 117, 186
119651	Ring, retaining 162, 172
119652	Ring, retaining 115
119653	Ring, retaining 109, 199
119654	Ring, retaining 136, 140, 152, 153, 177
119655	Ring, retaining 122
120175	Plate, on-off 171
121018	Nut, 4-40 hex 111, 117
121242	Clamp, 1/8 ID cable 133, 137, 139, 192
121243	Clamp, 3/16 ID cable 83, 98, 119, 134, 142, 150
121244	Clamp, 1/4 ID cable 98, 148, 159
121245	Clamp, 5/16 ID cable 98, 134, 139, 197, 199
121246	Clamp, 3/8 ID cable 168, 189
121551	Screw, 8-32 x 1/4 hex 115, 161, 171
124177	Lockwasher 121, 166
125011	Washer, flat 83, 90, 113, 151
125015	Washer, flat 83, 95, 96, 121, 144, 147, 165, 166, 168
125229	Nut, 6-32 hex 164, 185, 186
125239	Spring, compression 111, 117
125313	Washer, insulating 200
125390	Washer, flat 200
128357	Ring, retaining 120, 124
128358	Ring, retaining 114
128360	Ring, retaining 143
138401	Screw, 1/4-20 x 3/4 hex 160, 161, 173
143097	Ring, retaining 186
143287	Screw, 6-40 x 13/32 hex 198
143306	Fuse, SL-BL lamp 159
144778	Screw, #6 self-tapping 176
148128	Washer, flat 174
150710	Screw, 6-40 x 1-1/4 fil 153
150711	Washer, flat 162, 172
150966	Insulator, terminal block 197
150978	Screw, 6-40 x 1-1/8 fil 85, 134, 139
151335	Stud 197
151349	Nut, speed 197, 198
151415	Block, terminal 197
151416	Nut, 6-40 hex 197

PART NO.	DESCRIPTION AND PAGE NO.
151630	Screw, 6-40 x 1/4 hex 128, 135, 138, 166, 197, 199
151631	Screw, 6-40 x 5/16 hex 85, 86, 87, 88, 89, 113, 121, 146, 149, 150, 157, 158, 179, 180, 195, 196
151632	Screw, 6-40 x 3/8 hex 135, 138, 166, 194, 199
151637	Screw, 4-40 x 1/4 fil 83, 90, 113, 151
151690	Screw, 10-32 x 5/16 fil 147
151722	Screw, 6-40 x 3/16 hex 167
151723	Screw, 10-32 x 3/8 hex 115, 120, 146, 186
151880	Nut, 4-40 hex 115, 128, 192
152426	Nut, 6-40 self-locking 88, 153
152848	Screw, 1/4-20 x 3/4 rd 110, 112
152890	Washer, flat 153
152893	Screw, 4-40 x 1/4 hex 90, 109, 115, 119, 130, 146, 153, 154
153441	Screw, 10-32 x 7/16 hex 188
153442	Screw, 10-32 x 1/2 hex 136, 140, 152, 153, 186
153538	Screw, 6-40 x 7/16 hex 150
153803	Jumper, 5" slate 197
153806	Spring 143
153841	Screw, 6-40 x 9/16 hex 113, 119, 135, 138, 143, 188, 194, 195
154249	Screw, #8B self-tapping 85, 136, 142, 149, 150, 151, 152, 157, 158
154259	Screw, #6Z self-tapping 197, 198
154263	Bumper, rubber 160, 161
155081	Post 199
155594	Screw, 4-40 shoulder 149, 157
155865	Stud 175
156057	Washer, flat 192
156450	Screw, 2-56 x 1/2 fil 131
156653	Lockwasher 120, 146
156740	Screw, 6-40 x 7/32 hex 95, 165, 168, 197
156768	Screw, 8-32 x 9/32 hex 194, 195, 196
156875	Screw, 6-40 x 5/32 fil 166
158926	Screw, 4-40 x 7/32 hex 128
159642	Shim, .008" thk 186
160479	Grommet, rubber 158
161708	Latch, magnetic 185
162730	Screw, 1/4-20 x 7/16 hex 92, 94, 161, 173, 175, 176
162864	Clamp, 7/8 ID cable 171
162886	Screw, 4-40 x 7/32 hex 136, 140
163958	Washer, flat 154
172727	Post 199
173974	Screw, 10-32 x 5/16 hex 185
174795	Screw, 6-40 x 1/4 fil 121
178707	Bumper, rubber 150, 158
180714	Screw, #6 self-tapping 125, 126, 133, 137, 145, 150, 157, 158, 182, 186
180778	Plate 174
180798	Screw, 8-32 self-tapping 171, 177
180904	Tab, terminal 121, 144, 147, 165
181204	Washer, flat 95, 168, 194, 195, 196
181240	Screw w/lockwasher, 6-40 x 3/16 hex 147, 167
181241	Screw w/lockwasher, 6-40 x 1/4 hex 90, 109, 119, 146, 159, 197
181245	Screw w/lockwasher, 6-40 x 1/2 hex 159
181247	Screw w/lockwasher, 6-40 x 11/16 hex 109
181249	Screw w/lockwasher, 6-40 x 1 hex 145
181392	Terminal, tab type 183, 184
181424	Nut, 6-40 sq 159
181999	Insulator 150
182523	Clamp, 1-3/8" ID mounting 150, 159
182726	Terminal, receptacle type 144
182932	Nut, speed 186
184056	Screw w/lockwasher, 6-40 x 1/4 hex 85, 113, 142, 144, 147, 151, 170
184057	Screw w/lockwasher, 6-40 x 3/8 hex 153, 163, 190

F. DISASSEMBLY, REASSEMBLY, AND PARTS (Cont)

3. NUMERICAL INDEX (Cont)

PART NO.	DESCRIPTION AND PAGE NO.
184058	Screw w/lockwasher, 6-40 x 7/16 hex 185
184059	Screw w/lockwasher, 6-40 x 1/2 hex 121, 147, 165
184061	Screw w/lockwasher, 6-40 x 5/8 hex 190
184062	Screw w/lockwasher, 6-40 x 3/4 hex 187
184067	Screw w/lockwasher, 4-40 x 5/16 hex 186
185833	Plate, fuse 159
185834	Plate, fuse 159
185843	Fuse, SL-BL 1-1/4 amp 159
185871	Screw w/lockwasher, 8-32 x 3/8 hex 136, 139, 140, 160, 172
186749	Bolt w/cap 160, 161, 173, 185
186755	Screw, 8-32 self-tapping 153, 169
186823	Screw, 8-32 shoulder 136, 140, 152, 153
187072	Network 197
187242	Clip 174
188406	Switch 192
188483	Arm, stop 136
188733	Screw, 6-32 x 5/16 flat 134
188925	Post 174
188990	Jumper, 5" white 190
192007	Terminal, tab type 178
192278	Arm, right counter balance 186
192279	Arm, left counter balance 186
192557	Grommet, rubber 135, 138, 143, 153, 188
198670	Screw w/lockwasher, 6-40 x 5/16 hex 83, 95, 96, 103, 121, 144, 147, 165, 166, 167, 168, 185, 186, 188, 189, 190, 192
301466	Screw, 4-40 spl 150, 158, 166
301713	Outlet, convenience 190
304188	Clamp 161
304189	Keeper 161
307545	Jumper, 2" green 181
311763	Mount, vibration 134, 139
312301	Jumper, 6" red 190
312573	Jumper, 6" red 197
312574	Jumper, 6" black 190, 197
312829	Strap, 2-1/2" braided 114, 123
312918	Strap 93, 146, 157, 158
312919	Strap, cable 155, 184
318630	Jumper, 6-1/8" braided 161, 171, 190
320119	Spacer, .497" thk 136
320410	Terminal, spade type 164
320412	Terminal, spade type 125
320418	Terminal, ring type 132, 164, 197
320420	Terminal, ring type 150
321213	Resistor 142
323414	Washer, flat 169
324031	Latch, front lid 186
325287	Nut w/lockwasher, 10-32 hex 148
325911	Jumper, 6-1/2" lg green 190
326023	Screw, 4-40 x 9/32 hex 149, 150
326588	Screw, 6-32 x 1/4 self-tapping 113
326755	Jumper, 3-1/2" green 190
327819	Terminal, tab type 178, 183, 184
327954	Retainer, split ring 162, 172
327955	Nut, speed 161
330183	Flange 200
330212	Flange, right 200
330213	Flange, left 200
330443	Spring 200
332860	Bumper 161, 173
332893	Capacitor 150, 159
333588	Lamp, 28 V miniature 85, 142
333880	Fastener 162, 172
334610	Capacitor 150, 159
335123	Switch, pushbutton 85, 142
336334	Collar 179, 180
336810	Plate, identification 177, 198
337101	Ring, retaining 116
337171	Spacer 177

PART NO.	DESCRIPTION AND PAGE NO.
337826	Screw, 1/2" Pan hd 179, 180, 182, 183, 184
340697	Bushing 174
341545	Fastener 179, 180
341647	Terminal, receptacle type 125, 126, 129, 130, 142, 179, 180, 182, 183, 184, 189
341648	Terminal, receptacle type 126, 128, 129, 149, 182, 183, 184, 189
341691	Connector, 15 pt receptacle 86, 87, 125, 126, 142, 144, 149, 177, 178, 182, 189
341704	Terminal, receptacle type 125, 126, 179, 180, 182, 183, 184, 189
341705	Terminal, plug type 126, 179, 180, 182, 183, 184
341722	Clamp, cable 125, 126, 182
341729	Connector, 15 pt plug 126, 182
341819	Screw, 8-32 shoulder 84, 95, 168
341870	Spacer 147, 165
341872	Filter 128, 129
341873	Hood, cable connector 182, 183
341877	Filter 166
341891	Cable assembly 84, 91, 125, 146
341893	Cable assembly 181, 182
341895	Cable assembly 181, 182
341896	Cable assembly 181, 183
341897	Insulator 121, 147, 165
341898	Insulator 121, 147, 165
341911	Cable assembly 83, 118, 125
341913	Cable w/terminals 166
341920	Cover 166
341926	Clip 115
341961	Support, cable 125
341962	Support, cable 125
341963	Retainer, cable 125
341972	Pin, contact 182, 183
341973	Socket, contact 183
341977	Connector, 25 pt receptacle 166, 182, 183
341978	Connector, 25 pt plug 183
343470	Label 164
345630	Switch assembly 176

PART NO.	DESCRIPTION AND PAGE NO.
346272	Bracket 128
346317	Bracket w/filters 128
346318	Cover 128
346327	Cradle 179
346329	Clamp 179, 180
346331	Cover 179
346333	Cable assembly 179, 180
346696	Shield 150
346789	Cradle 180
346790	Cover 180
346791	Cover 180
346792	Pad 180
400199	Clip, retaining 109, 113, 155
400566	Restraint, cable 90, 151, 157
400567	Cable assembly 109, 128
400568	Cable assembly 82, 90, 129, 151, 157
400574	Terminal, plug type 128, 129, 149
400575	Switch assembly 130
400576	Bracket 128
400577	Bracket 90, 129
400598	Cable assembly 82, 83, 88, 90, 109, 115, 130, 153
400607	Cable assembly 129
400611	Cable assembly 129
400618	Distribution assembly, ac 133, 137
400620	Cable assembly 83, 113, 129
400621	Cable assembly 82, 83, 90, 113, 128
400628	Connector, 15 pt receptacle 130
400920	Connector, 4 pt receptacle 128, 157, 192
400973	Strap 190
401053	Motor w/cable 127
401110	Guide 118, 124, 148, 177
401128	Plate, front 109, 115
401132	Louver 109, 114, 119, 121, 123
401150	Connector, 9 pt receptacle 83, 90, 129, 149, 157, 166, 179, 180, 182, 183, 184
401152	Table 160
401153	Door 162, 169
401156	Foot 160

F. DISASSEMBLY, REASSEMBLY, AND PARTS (Cont)

3. NUMERICAL INDEX (Cont)

PART NO.	DESCRIPTION AND PAGE NO.
401169	Arm, stop 123
401170	Spacer 123
401173	Door 120
401174	Door 124
401180	Door 117
401183	Bracket w/post 114, 115
401184	Bracket 115
401190	Screw, 6-40 shoulder 121
401191	Panel, end 109, 156
401194	Band, trim 109, 156
401195	Clip 109, 156
401198	Latch 122
401200	Copyholder 174
401203	Bumper 160, 161, 173, 185, 194, 195, 196
401204	Bumper 112, 113, 119, 122, 133, 137, 156
401212	Trim, louver 121
401213	Spring 122
401216	Door, printer 111
401217	Bracket, left door 111, 120
401218	Bracket, right door 120
401219	Bracket 111
401220	Post 109
401223	Screw, 10-32 shoulder 109, 120, 123
401224	Strip, ground 119, 146, 148
401225	Screw w/lockwasher, 8-32 x 15/16 hex 92, 94, 114, 119, 122, 123, 160, 161, 165, 169, 170
401227	Tab, terminal 109, 119, 145, 149, 150, 151, 157, 158
401228	Strap, 5-7/8 braided 120
401230	Bumper 120, 124
401232	Bumper 111, 117
401239	Screw 8-18 spl 90, 109, 114, 119, 123, 133, 142, 156
401245	Support 118, 124
401251	Cabinet assembly 113, 114, 115, 119, 120, 122, 123, 148
401260	Plate, trim 113, 151
401261	Plate, trim 151
401262	Bracket, trim 146
401263	Bracket, trim 119, 146
401268	Screw, 6-40 shoulder 109, 114, 119, 123
401269	Washer, spring 120, 124
401273	Latch, bar 111, 117
401274	Handle 111, 117
401275	Bracket, left window 111, 117
401276	Bracket, right window 111, 117
401277	Bracket 111, 117
401278	Guide, paper 111, 117
401280	Foam 111, 117
401285	Spring 111, 117
401287	Latch 120, 124
401288	Handle 120, 124
401291	Divider 161
401294	Arm 114
401299	Window 111, 117
401305	Plate, left insert 109, 156
401306	Plate, right insert 109, 156
401512	Screw, 1/4-20 captive 160
401514	Bracket, left 122
401515	Bracket, right 119, 122
401518	Screw w/lockwasher, #6 hex 115, 119, 122
401520	Module 165
401521	Module 121, 144, 147, 165
401552	Bracket 160
401555	Holder 160
401556	Latch 162, 172
401564	Plate, trim 151
401566	Button, plug 161
401567	Baffle, foam 161
401568	Spring 162, 172
401582	Nut w/lockwasher, 8-32 hex 94, 133, 137, 154, 158, 159, 160, 161, 171, 173
401585	Plate, retaining 112
401586	Bushing 110, 112, 116, 135, 138, 155
401590	Cradle assembly 112
401596	Bushing 112
401599	Spring, torsion 110, 112, 116, 155

PART NO.	DESCRIPTION AND PAGE NO.
401601	Pin, guide 165
401623	Connector, 9 pt plug 129, 149, 179, 180, 183, 184
401625	Connector, 80 pt card 166
401628	Bushing 131, 163, 164, 190
401629	Cord w/plug 131, 184
401631	Channel 118, 124
401634	Cable assembly 96, 165
401637	Plate 169
401638	Stiffener, cable 127
401640	Cable assembly 181, 183
401641	Cable assembly 181, 184
401643	Cable assembly 96, 166
401645	Stiffener, cable 127
401646	Connector, 3 pt receptacle 127
401647	Connector, 3 pt receptacle 127, 184
401648	Connector, 3 pt plug 127, 178
401662	Cover 165
401665	Panel assembly 92, 94, 160, 164, 171, 181
401667	Pad 165
401669	Card w/plug 164
401670	Bracket 164
401673	Switch, toggle 164
401674	Connector, receptacle 163, 164
401676	Screw, 8-32 shoulder 165
401677	Cable assembly 168
401680	Bracket 165
401681	Plate 160
401682	Bar 165
401686	Plate mounting 166
401687	Screw, 8-32 captive 165
401688	Screw, 8-32 captive 121, 147, 165
401710	Bracket 121, 147
401714	Clip 113, 119, 122, 146
401715	Relief, strain 182
401718	Relief, strain 179, 180, 183, 184
401725	Modification kit 169
401728	Latch, lid 161
401745	Pad, upper front 112
401746	Pad, rear lid 111
401755	Cabinet 109, 110, 112, 151
401757	Label 162, 172
401763	Latch, left 119, 122
401764	Latch, right 119, 122
401765	Latch, 162, 172
401795	Plate, front 116
401798	Screw, 6-40 shoulder 115
401799	Latch, left side 115
401800	Latch, right side 115
401802	Post 115
401805	Trough, paper 174
401806	Guide, line 174
401807	Handle 174
401808	Screw, 4-40 x 5/16 spl 174
401809	Shaft 174
401810	Screw, 6-40 x 3/4 fil 174
401811	Arm, pivot 174
401812	Post 174
401813	Locknut 174
401814	Shaft 174
401815	Screw, 1/4-20 spl 174
401816	Washer 174
401817	Clamp 174
401818	Screw, 1/2-32 spl 174
401819	Screw, 1/4-20 spl 174
401820	Screw, 1/4-20 spl 174
401821	Pad 174
401822	Washer 174
401825	Clip 120, 146, 148
401826	Post 115
401827	Lever, left latch 115
401828	Lever, right latch 115
401835	Spring 174
401836	Bushing 174
401837	Lockwasher 174
401838	Washer, flat 174
401839	Lockwasher 174
401840	Nut, 1/2-32 hex
401841	Label 174
401842	Bar 110, 112, 116, 155
401843	Strap, 5-1/2 braided 109
401844	Hook 110, 112, 116, 155
401855	Shaft assembly 174
401861	Screw, 1/4-32 pilot 110, 116, 135, 155
401865	Cradle assembly 110, 112, 116, 155
401868	Spring 110, 112, 116, 155
401869	Screw, 10-32 shoulder 110, 112
401870	Plate, retaining 110, 116, 135, 138, 155

F. DISASSEMBLY, REASSEMBLY, AND PARTS (Cont)

3. NUMERICAL INDEX (Cont)

PART NO.	DESCRIPTION AND PAGE NO.
401871	Hub 110, 116, 135, 138, 155
401872	Bushing 110, 116, 135, 138, 155
401873	Post 116
401877	Slide assembly, left 116
401878	Slide assembly, right 116
401978	Slide assembly, left 127
401980	Guide 121, 147, 165
402007	Bracket 130
402008	Retainer 130
402009	Lever, actuating 130
402010	Spacer 130
402011	Spring 130
402012	Switch 130
402126	Pad, rear lid 117
402136	Bushing 164
402141	Bracket 116
402142	Bracket 116
402143	Clamp, cable 113, 194
402144	Shield, cable 115
402146	Cable assembly 128, 157
402147	Cable assembly 129
402153	Cover, filter 166
402161	Filter assembly 166
402166	Protector, cable 147
402173	Cable assembly 83, 119, 126
402264	Table 161
402266	Plate 92, 161, 169, 170
402449	Bushing 149, 150
402875	Extension, plug 153
403351	Frame, winder 197, 198, 199, 200
403353	Spring, retainer 198
403354	Bracket 194
403355	Cover 197
403357	Bracket 197
403358	Washer, clutch 198
403359	Disk, drive 198
403360	Brace, drive 198
403362	Cord assembly 197
403368	Post 198
403369	Bearing 198
403393	Motor 197, 200
403445	Cable assembly 86, 150
403481	Bracket, outlet 163
403482	Switch, toggle 163
403498	Plate 163
403566	Holder 175
403567	Holder assembly 175
403568	Padding 175
403701	Terminal 132, 189
403781	Cabinet 133, 134, 135
403785	Blower 85, 88, 134, 139, 153
403787	Arm, left latch 135, 138
403788	Arm, right latch 135, 138
403789	Screw, 8-32 shoulder 135, 138
403790	Plate 134, 139
403791	Screw, 8-18 shoulder 134
403792	Cradle 135, 143
403793	Channel, right 135, 138, 188
403794	Channel, left 135, 188
403795	Bracket 85, 135, 138, 142, 149
403800	Button 85, 142
403801	Button 85, 142
403802	Table 173
403803	Door 172
403805	Bracket, latch 173
403806	Bracket 172
403807	Plate, trim 157
403812	Plate, front 133, 156
403813	Bracket 136
403814	Screw, 8-32 shoulder 135, 138
403819	Dome 134, 136
403821	Clamp 136
403824	Bracket 142
403825	Shield 134, 154
403828	Plate w/adhesive 149, 157
403830	Cable assembly 85, 149
403832	Plate 136, 140
403835	Switch 98, 142, 189
403836	Latch, left 136, 140
403837	Latch, right 136, 140
403838	Bracket 136, 140, 154
403840	Spring, latch 136, 140
403844	Spring, compression 142, 189
403845	Bracket 149, 157
403846	Cover 149, 157
403847	Spacer 142, 189

PART NO.	DESCRIPTION AND PAGE NO.
403848	Spring, actuator 142, 189
403849	Lever, actuating 142, 189
403850	Bracket 142, 189
403853	Plate 142, 189
403856	Collar 168, 172
403888	Springs torsion 135, 138
403889	Springs torsion 135, 138
403890	Cable assembly 85, 142
403892	Cable assembly 85, 133, 137, 144
403964	Cable assembly 85, 149
403968	Foam, front 141
403975	Foam, dome 141
405033	Housing 131
405034	Bracket 131
405035	Actuator, switch 131
405036	Handle, switch 131
405037	Connector, 6 pt receptacle 131, 190
405038	Connector, 6 pt plug 91, 127, 144, 145, 189
405039	Spacer 131
405040	Insulator, switch 91, 131
405041	Insulator 131
405042	Switch 131
405043	Capacitor 131, 163, 178, 190
405044	Terminal, receptacle type 131
405045	Terminal, receptacle type 126, 127, 144, 178, 184
405046	Terminal, plug type 126, 127, 144, 178
405047	Cable assembly 84, 91, 127, 146, 148
405048	Cable assembly 82, 109, 119, 127
405049	Cable assembly 83, 91, 113, 127
405050	Distribution assembly, ac 82, 83, 84, 85, 88, 90, 118, 119, 131, 133, 137, 153
405051	Cable assembly 83, 84, 91, 118, 124, 126
405052	Lockwasher 131
405053	Strap 131
405138	Screw, 6-32 self-tapping 153
405520	Dome 134, 136, 142

PART NO.	DESCRIPTION AND PAGE NO.
405523	Clamp, window 136, 140
405540	Dome 139
405545	Cable assembly 133, 137
405554	Spring, torsion 136
405555	Label 135, 138
405557	Foot w/bumper 161, 173
405560	Trim, front 144, 147
405562	Modification kit 145
405563	Modification kit 146, 147
405565	Trim, front 145
405566	Baffle 173
405568	Shield 142, 173
405569	Screw, 8-32 shoulder 134, 139
405575	Duct 134
405576	Duct 139
405577	Base 177
405578	Insert 177
405579	Cover 178
405580	Cover 177
405581	Plate, bottom 177
405582	Disc 177
405583	Foot 177
405584	Label 177
405586	Screw, self-tapping 177
405589	Arm, stop 140
405590	Cradle 138
405591	Foam, front 141
405595	Foam, dome 141
405600	Cabinet 137, 138, 139
405604	Shield 139
405605	Arm, stop 136, 140, 152, 153
405606	Plate, front 137
405609	Clip, grounding 149, 177, 178
405611	Cord assembly 177, 184
405612	Shield 178
405613	Shield 178
405614	Distribution assembly, ac 177, 178
405634	Bracket, left 138
405635	Bracket, right 138
405636	Screw, 1/4-20 spl 138
405637	Nut, 1/4-20 spl 138
405638	Screw, 1/4-32 x 13/32 flat 138
405639	Spacer 138
405642	Spring, torsion 140

F. DISASSEMBLY, REASSEMBLY, AND PARTS (Cont)

3. NUMERICAL INDEX (Cont)

PART NO.	DESCRIPTION AND PAGE NO.
405643	Spring, torsion 136, 140, 152, 153
405644	Plate w/adhesive 149
405660	Table 173
405669	Shield 150, 158
405671	Modification kit 149
405673	Bracket 150
405674	Label 150
405675	Bracket 150, 158
405794	Guide 138
405829	Bracket 176
406046	Cable assembly 84, 91, 148
406047	Modification kit 148
406065	Screw, 10-32 x 1-1/4 hex 148
406169	EIA assembly 87
406172	Cable assembly 87
406173	Cable assembly 87
406175	Cable assembly 87
406188	Bracket 150
406189	Capacitor assembly 87
406192	Cable assembly 87
406216	Post 143
406219	Latch assembly 143
406221	Channel, right 143
406222	Channel, left 143
406293	Guide, paper 137
406309	Spring, torsion 135, 138
406314	Tag, caution 195
406360	Strap, 3-1/2" green 190
406361	Panel assembly 98, 188
406362	Strap, 7" white 190
406363	Strap, 3" green 190
406364	Strap, 5" red 190
406365	Strap, 5" white 190
406366	Chute, form 187
406367	Light, indicating 187
406368	Light, indicating 187
406369	Switch, rocker 187
406374	Modification kit 192
406379	Shaft 186
406380	Release, latch 186
406381	Latch w/button 186
406382	Spring, latch 186
406384	Plate, latch 185
406387	Plate, nut 185
406388	Plate, nut 185
406389	Cover 185
406390	Bracket, latch 186
406391	Plate, sticker 186
406395	Hinge, right 186
406396	Hinge, left 186
406399	Plate, nut 186
406400	Plate 188
406401	Plate, switch 186
406402	Plate, cover 185
406403	Bracket 185
406404	Plate 190
406405	Button, plug 186
406406	Support, left 188
406407	Support, right 188
406408	Support, left 188
406409	Support, right 188
406410	Tray 188
406411	Bracket 186
406413	Barrier 98, 186
406415	Door, left 185
406416	Door, right 185
406417	Leg, cabinet 185
406418	Top, cabinet 186, 187
406419	Housing 190
406423	Bracket 186
406424	Cable assembly 98, 189
406426	Bracket 98, 189
406431	Label 186
406432	Cable assembly 189
406434	Strap, 7" braided 98, 185
406437	Cord assembly 190
406444	Guide, front paper 192
406445	Guide, rear paper 192
406446	Cable assembly 192
406447	Paper-Out assembly 103, 192
407001	Adhesive, 5/8 x 14-5/16 109, 115, 144, 147
407002	Adhesive, 5/8 x 18-15/32 133, 155
407003	Adhesive, 26 x 5/8 137
407012	Strip, adhesive 150
407022	Adhesive, 3 x 13-1/2 157
407024	Modification kit 150

PART NO.	DESCRIPTION AND PAGE NO.
407025	Modification kit 149
407026	Modification kit 149
407027	Bracket, switch 133, 137
407042	Modification kit 151
407043	Modification kit 151
407046	Foam, dome 141
407048	Bracket, stop arm 136, 153, 154
407055	Module assembly, fan 146, 147
407057	Post 136, 140, 152, 153
407060	Guide, narrow paper 152
407061	Guide, wide paper 152
407062	Clip, window 152
407064	Clamp, left 136
407065	Clamp, right 136
407066	Clamp, cable 145
407075	Input assembly, signal 85, 149
407076	Capacitor assembly 86, 150
407077	Input assembly, signal 86, 89, 150, 158
407078	Strip, ground 120, 146, 148
407080	Window 136
407081	Window 140
407085	Housing 132
407088	Switch, rocker 132, 187
407090	Switch assembly 82, 83, 84, 85, 88, 90, 118, 119, 132, 133, 137
407092	Insulator 132
407093	Cord assembly 132
407100	Modification kit 157
407101	Modification kit 158, 159
407102	Modification kit 157
407110	Dome 154
407111	Cabinet 153, 155
407112	Foam, front 156
407113	Foam, right 156
407114	Divider, foam 156
407117	Foam, bottom front 158
407118	Foam, bottom large 157
407121	Bracket 158
407122	Cable w/bracket 88, 157
407123	Plug, jumper 157
407124	Power supply 89, 158, 159
407125	Bracket, left seal 153
407127	Pin, hinge 154
407128	Bracket 159
407129	Shaft 154
407131	Plate w/button 154
407132	Spring, latch 154
407133	Latch, window 154
407134	Lever 154
407135	Bracket, left latch 154
407136	Bracket, right latch 154
407137	Bracket 153
407138	Spring w/button 154
407141	Post 153
407142	Clamp, window 154
407145	Spring 154
407146	Cable assembly 159
407147	Cable assembly 159
407148	Cable assembly 153
407149	Guide 154
407150	Latch 154
407151	Screw w/washer 134, 154, 156
407152	Window 154
407153	Transformer 159
407154	Door 154
407155	Foam 154
407156	Foam 154
407158	Cable assembly 158
407159	Bushing, shoulder 155
407161	Leveler, leg 133, 137, 156, 195
407162	Cap 133, 156, 195
407163	Filler w/cover 157, 158
407164	Filler w/cover 158
407170	Duct, fan 153, 196
407176	Cover 133, 137
407192	Guide, paper 154
407196	Guide 111, 117
407197	Guide, paper 111, 117
407200	Modification kit 152
407201	Bracket 152
407202	Modification kit 152
407215	Label 191
407216	Holder, Label 191
407285	Panel assembly 92, 161, 163, 171
407301	Cable assembly 86, 150, 158
407302	Cable assembly 86, 150
407303	Cable assembly 86, 150
407323	Cable assembly 150
407378	Module assembly 165
407469	Bracket 200

F. DISASSEMBLY, REASSEMBLY, AND PARTS (Cont)

3. NUMERICAL INDEX (Cont)

PART NO.	DESCRIPTION AND PAGE NO.
407470	Shaft 199
407471	Resistor 200
407472	Insulator 200
407473	Lever, stop 199
407474	Arm, sensing 199
407476	Switch 199
407477	Bracket 197
407478	Bracket 195, 196
407479	Bracket 195, 196
407480	Resistor 200
408005	Latch 170
408007	Guard, fan 167
408008	Plate 144, 147
408015	Fan assembly 147, 167
408017	Cable assembly 147, 167
408018	Switch, toggle 164
408022	Bracket 147, 167
408029	Filter assembly 167, 181
408030	Guard assembly, fan 95, 167
408038	Plate, front 144, 147
408039	Insulator, switch 164
408041	Bracket 161
408042	Clip, cable 93
408043	Holder 161
408044	Bracket 169, 170
408045	Modification kit 169
408047	Modification kit 170
408048	Ptl, front 83
408049	Modification kit 170
408050	Ventilation assembly 83, 84, 95, 144, 147, 167
408051	Modification kit 144
408052	Switch assembly 92, 94, 164
408053	Modification kit 168
408054	Modification kit 168
408064	Foot w/nut 161, 173
408073	Label 170
408676	Lever 192
408677	Bracket 192
408881	Insulator 163, 190
408882	Strip, terminal 163, 190
408887	Screw, 6-32 spl 90
408893	Cover 179
408894	Cover w/pad 179
408895	Pad 179
408896	Cradle w/bracket 143
408897	Cradle w/bracket 143
408898	Adhesive 194, 195, 196
408981	Cord assembly 163
408986	Guide, paper 133
409624	Card, circuit 131
410056	Card, circuit 128, 149, 157
410624	Card, circuit 131
410626	Card, circuit 132
430566	Switch, rocker 178, 197

PART 10 -- MODEL 40 SETS AND STATIONS

INDEX PAGE

A. GENERAL. 2

B. SET AND STATION IDENTIFICATION
1. GENERAL. 2
2. IDENTIFICATION 7
3. OPTIONS FOR MODEL 40 SETS. 12
4. OPTIONS FOR INTEGRATED CONTROLLER ROP. 42
5. OPTIONS FOR 9140 STATION CONTROLLER. 59
6. OPTIONS FOR SYNCHRONOUS STATION ARRANGEMENTS (40/4). 66
7. OPTIONS FOR SYNCHRONOUS SINGLE DISPLAY STATIONS (40/4) 83
8. SET INTERFACE. 91
9. DIMENSIONS 95

C. TESTING
1. GENERAL. 97
2. PROTECTIVE GROUND AND PREOPERATIONAL CHECKS. 98
3. BRIEF OFF-LINE CHECKOUT -- KD AND KDP SETS (40/0, 40/1, 40/2, AND 40/3). 100
4. COMPLETE OFF-LINE CHECKOUT -- KD AND KDP SETS (40/0, 40/1, 40/2, AND 40/3). 103
5. COMPLETE OFF-LINE CHECKOUT -- ROP SETS WITH 40C103 CONTROLLER. . . . 117
6. BACK-TO-BACK CHECKOUT USING EIA INTERFACE CABLE (40/1, 40/2, AND 40/3). 120
7. COMPLETE OFF-LINE CHECKOUT -- ROP SETS (40C303AA/001 OR 40C303AD). . 122
8. COMPLETE OFF-LINE CHECKOUT -- ROP SETS (40C303AC/003). 126
9. ON-LINE CHECKOUT -- ROP TERMINALS. 129
10. RECEIVE AND SEND OPERATION CHECKOUT (40/0) 130
11. MODEL 40/4 MINI- AND MAXI-CLUSTER ARRANGEMENTS OFF-LINE CHECKOUT . . 151
12. MODEL 40/4 ON-LINE TESTING 166
13. SINGLE DISPLAY ARRANGEMENTS OFF-LINE CHECKOUT (40/4) 168

D. TROUBLESHOOTING
1. GENERAL. 192
2. SET ANALYSIS 195
3. 9140 STATION CONTROLLER ANALYSIS 205
4. MODEL 40/4 MINI- AND MAXI-STATION ANALYSIS 225
5. MODEL 40/4 SINGLE DISPLAY STATION ANALYSIS 227

E. WIRING DIAGRAMS. 239

F. CABLE INTERCONNECTION. 291

PART 10 -- MODEL 40 SETS AND STATIONS

A. GENERAL

This section provides information to identify the Model 40/0, 40/1, 40/2, 40/3, and 40/4 Sets or Stations and to test, troubleshoot, and service them. It includes a description of options that may be implemented and variable features that may be ordered for the set or station. Also provided is information on set and station wiring and cable interconnection.

NOTE: When ordering replaceable components, unless otherwise specified, prefix each part number with the letters "TP" (ie, TP410055).

B. SET AND STATION IDENTIFICATION

1. GENERAL

A Model 40/0, 40/1, 40/2, 40/3, or 40/4 Set or Station is a combination of modular components (ie, display monitor, operator console, electronics package, etc) interconnected to provide data communications on switched network or private line applications.

For 40/1, 40/2, and 40/3, there are three basic set or station configurations: Keyobard Display (KD), Keyboard Display Printer (KDP), and Receive-Only Printer (ROP). The KD and KDP configurations provide send and receive operation with facilities to prepare and edit data for send operation. The ROP provides hard copy of received data. The Keyboard Display (KD) is the basic set or station configuration used in 40/0 applications.

For 40/4, there are three basic types of synchronous Model 40 configurations: maxi-cluster and mini-cluster. A maxi-cluster configuration consists of one Station Cluster Controller (SCC) which can handle from one to six Device Cluster Controllers (DCCs). Each DCC is capable of handling from one to six devices (keyboard displays and printers). At least one of the devices will be a KD. A DCC can handle a maximum of four KDs.

A mini-cluster configuration consists of one Mini-Cluster Controller (MCC) which is capable of handling from one to three devices (keyboard displays and printers). At least one of the devices will be a KD. A MCC can handle a maximum of two KDs.

A single display configuration consists of one Single Display Controller (SDC) which is capable of handling one keyboard display and one printer (refer to Page 6).

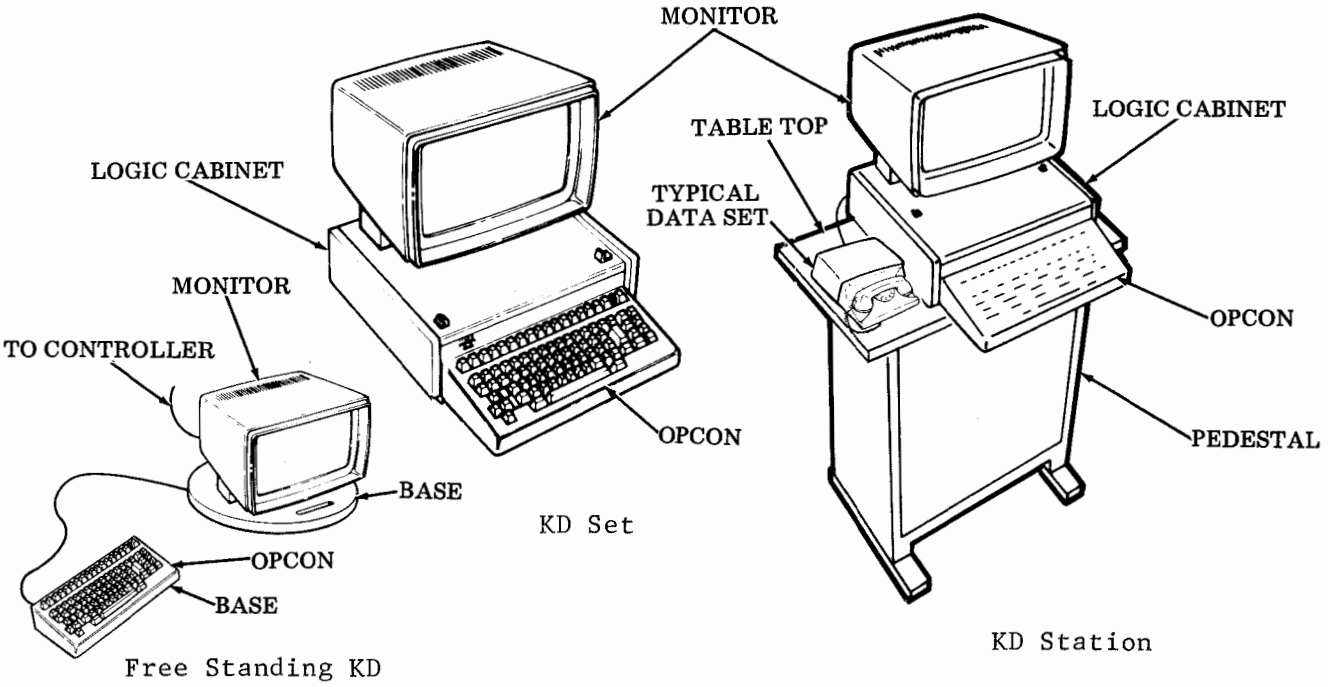

KD Set

Free Standing KD

KD Station

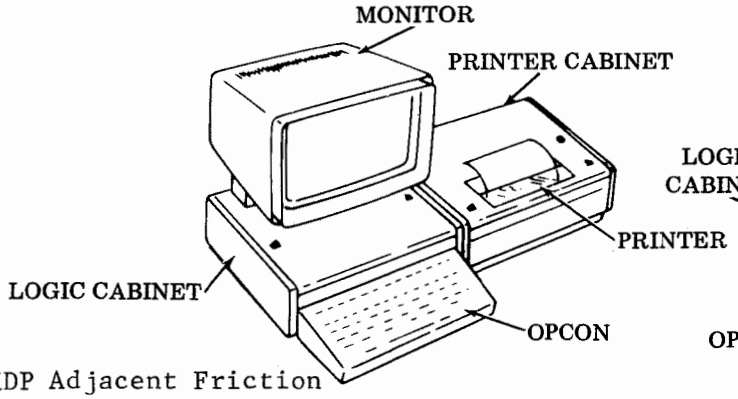

KDP Adjacent Friction Feed Printer

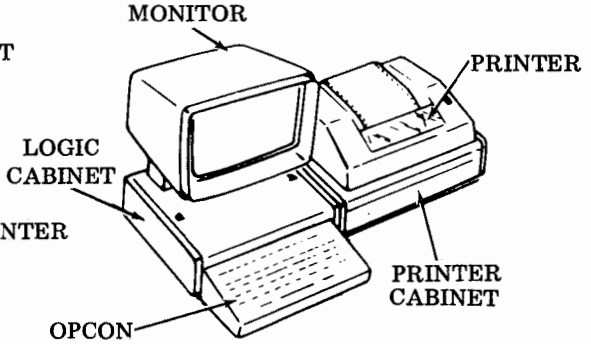

KDP Adjacent Tractor Feed Printer

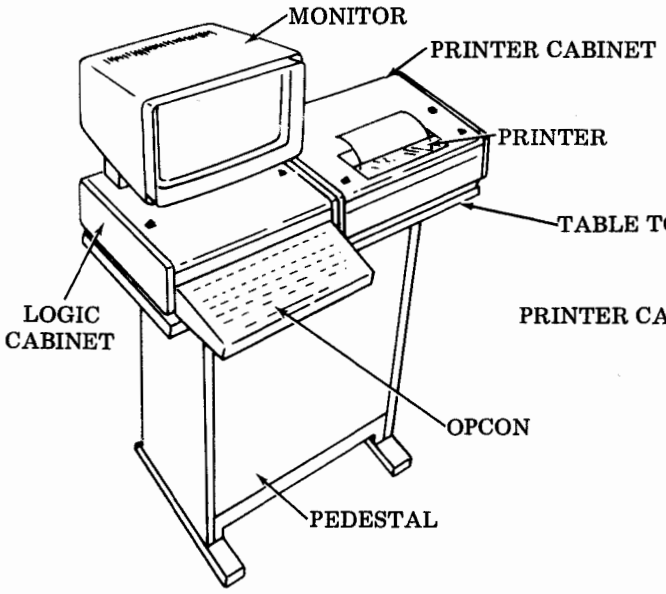

KDP Adjacent Friction Feed Printer and Pedestal

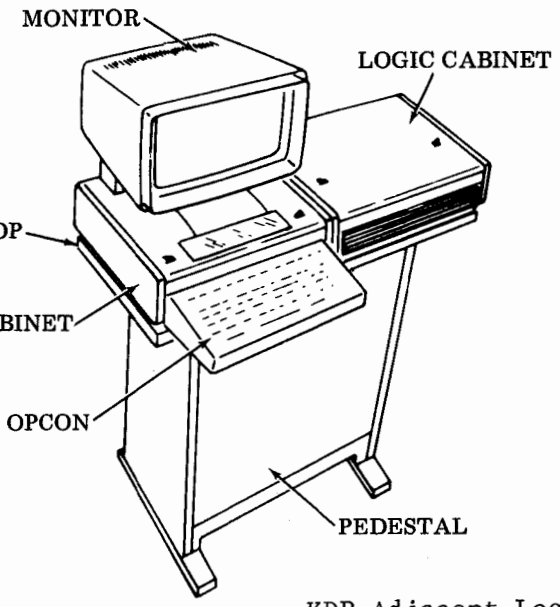

KDP Adjacent Logic and Pedestal

B. SET AND STATION IDENTIFICATION (Cont)

1. GENERAL (Cont)

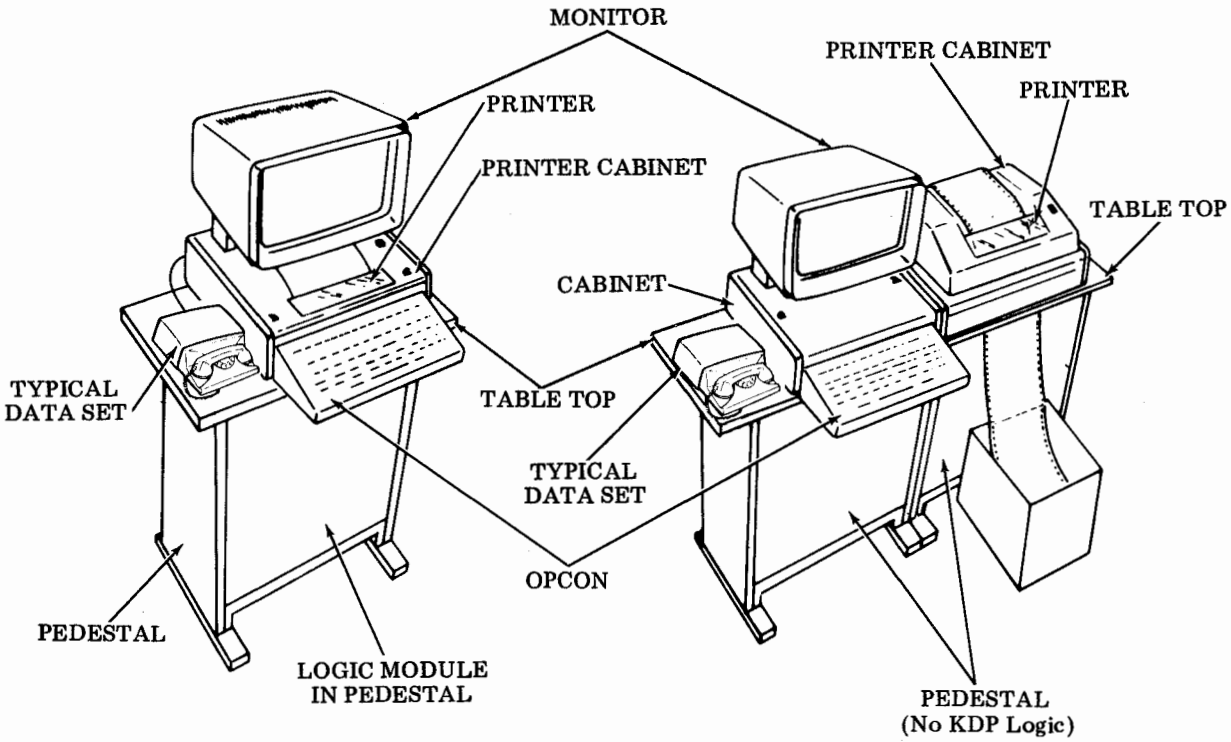

KDP Station

KDP Station W/Tractor Feed Printer on Pedestals

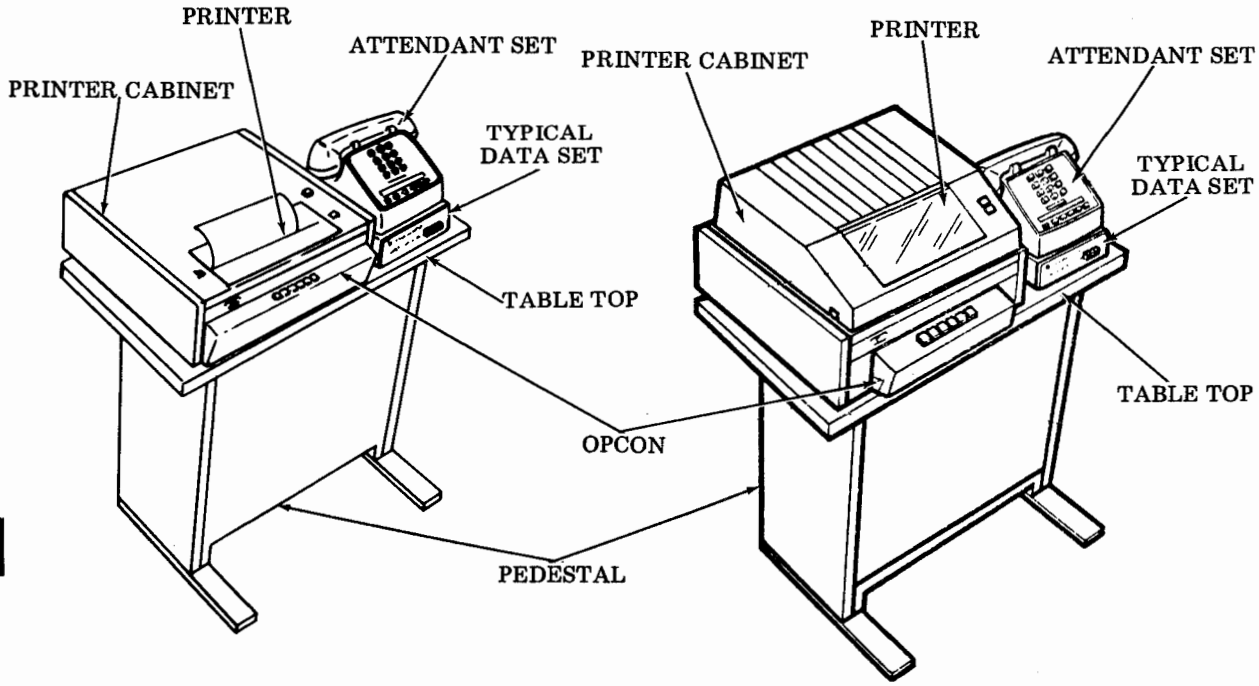

ROP Station (Friction Feed Printer)

ROP Station (Tractor Feed Printer)

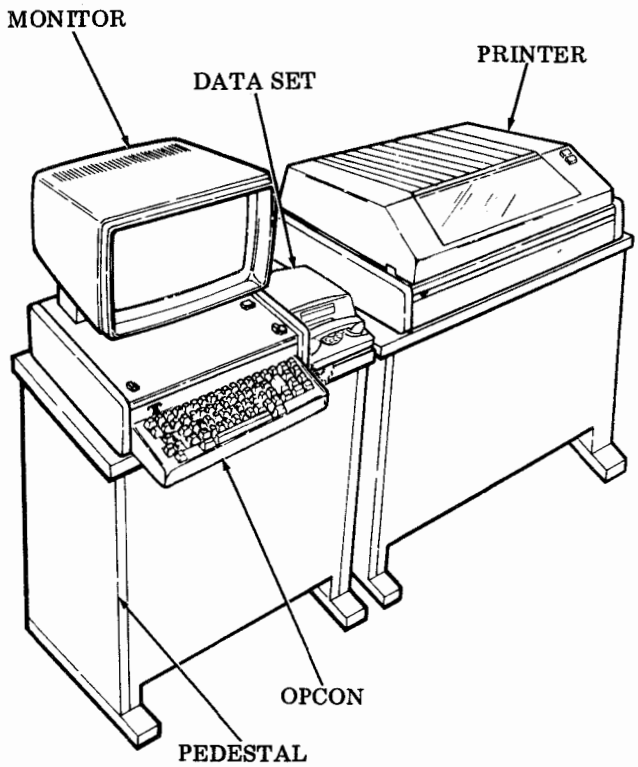

KDP With Adjacent 132-Column
Tractor Feed Printer Set

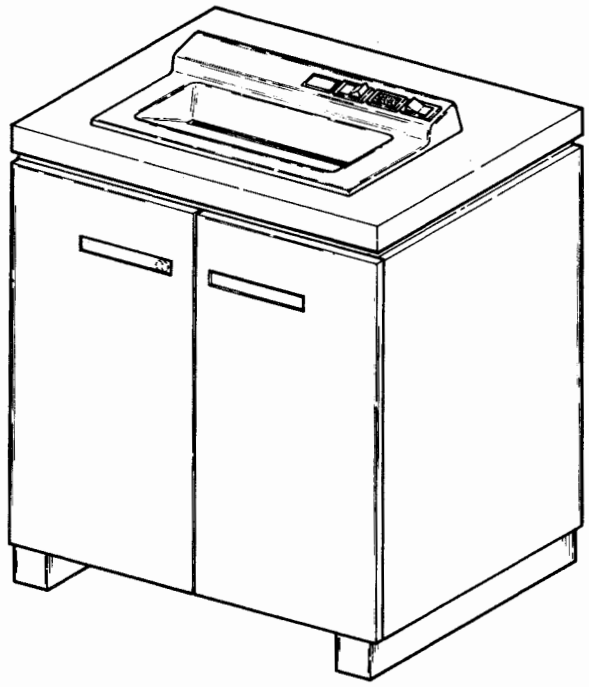

Forms Access Printer Set

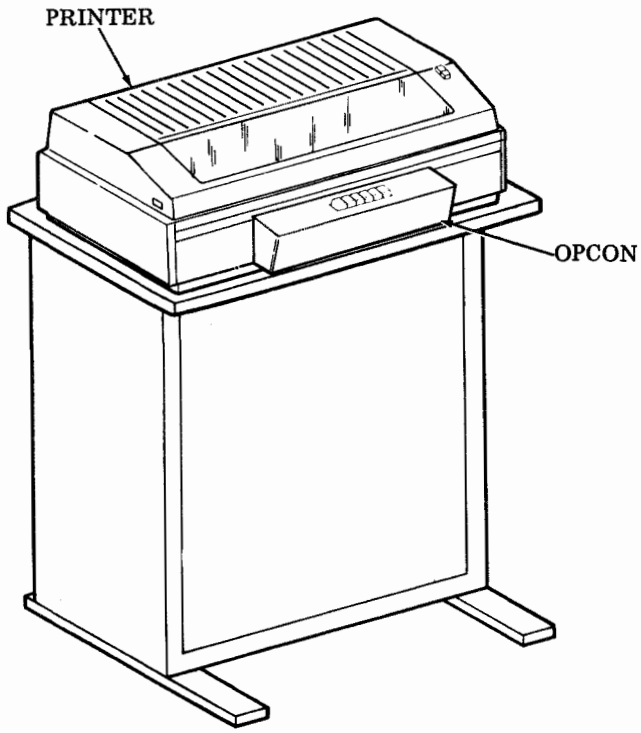

132-Column Tractor
Feed ROP Set

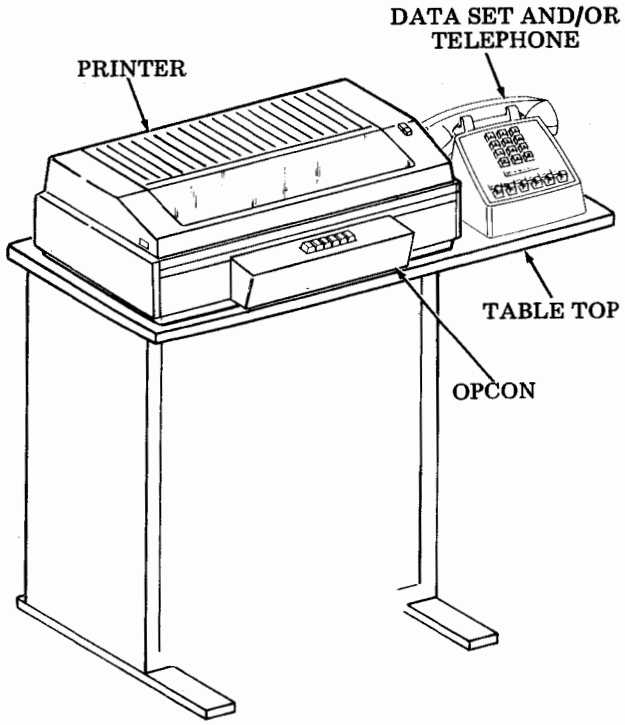

132-Column Tractor Feed ROP Set
With Data Set or Telephone

B. SET AND STATION IDENTIFICATION (Cont)

1. GENERAL (Cont)

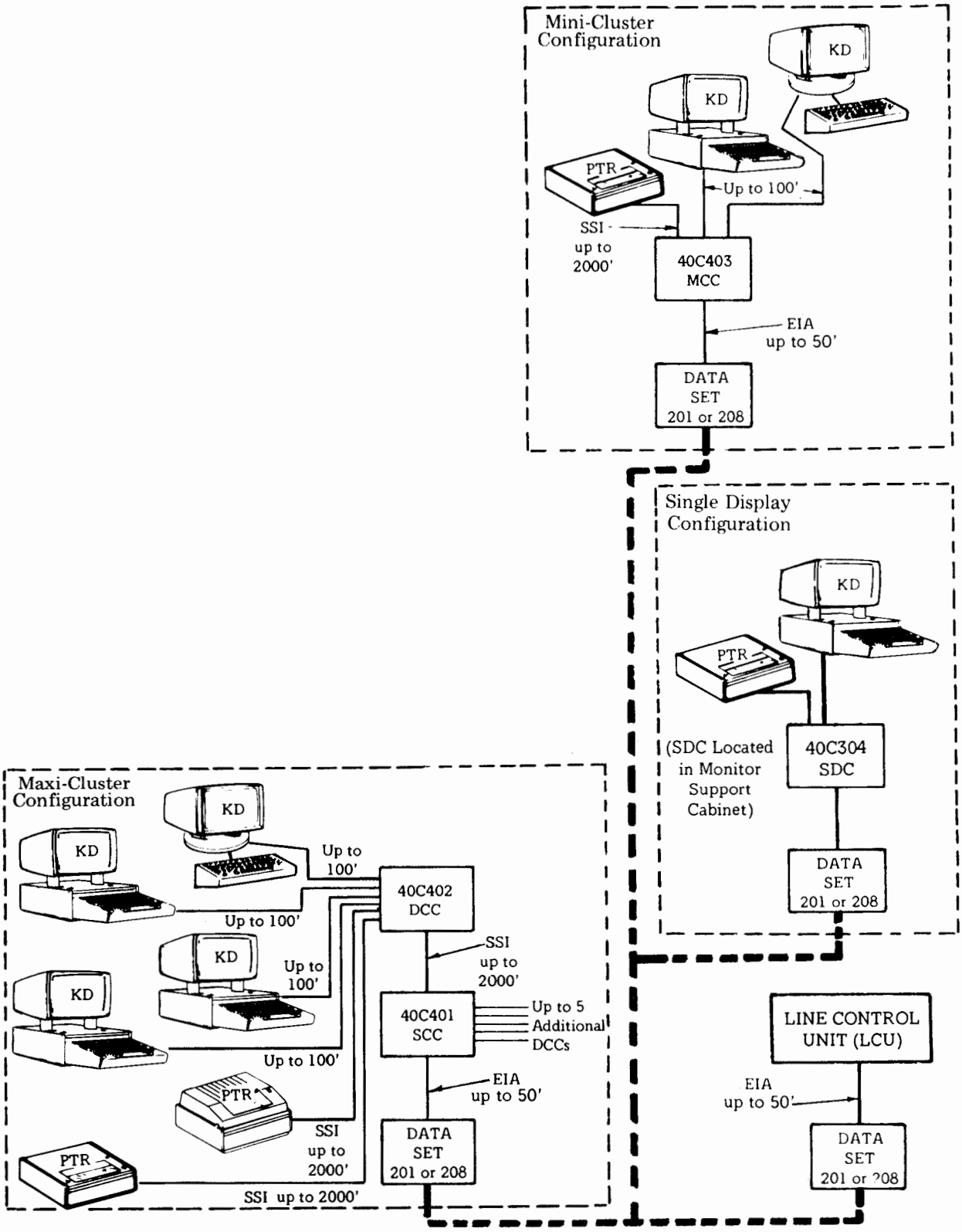

Typical 40/4 Configurations

2. IDENTIFICATION

Knowing what features are provided and how those features are optioned to operate is necessary for installation and operational checkout. Several methods are presented in the following paragraphs for determining terminal features and optioning.

Features included in a terminal or station can be identified by observing if certain keytops are provided on the operator console, or if a certain type or quantity of printed circuit boards are present in the controller and display logic circuitry.

Options selected in the Model 40 Terminal or Station should be recorded on a Features and Options Record. Typical forms for this purpose are shown in 3. OPTIONS FOR MODEL 40 SETS. Storage locations for Features and Options Record forms are provided in cabinetry. A record form should be maintained with each terminal or station controller logic to indicate how the optional features are selected.

NOTE: References in this manual to Teletype Corporation Standard Serial Interface (SSI) describe input/output signaling characteristics for devices using high speed SSI signals.

References in this manual to American National Standard Code for Information Interchange (ASCII) and Extended Binary Coded Decimal Interchange Code (EBCDIC) describe line codes used in communications with Data Communications Processor.

References in this manual to: 1. Synchronous operation describes terminals equipped with an EIA interface that require an external clock to send or receive on-line. Start and stop bits are not present in the data stream. Synchronism between a sender and receiver is maintained by the transmission of synchronous characters. On-line protocol is dependent on design. The Baud rate is determined by the external clock.

2. Asynchronous operation describes terminals equipped with either an EIA or 20/60 milliampere interface that have an internal clock, that determines the on-line Baud rate. Start and stop bits for each character are transmitted to maintain synchronism between the sender and receiver.

3. Isochronous operation describes terminals equipped with an EIA interface that require either an external clock or provide timing across the interface. Start and stop bits for each character are transmitted to maintain synchronism. This kind of operation permits a station arrangement of an asynchronous terminal with a synchronous data set.

4. Parallel Terminal Interface (PTI) operation is a special case of synchronous operation where the Model 40 devices are connected to a controller through Teletype Corporation parallel interfaces.

B. SET AND STATION IDENTIFICATION (Cont)

2. IDENTIFICATION (Cont)

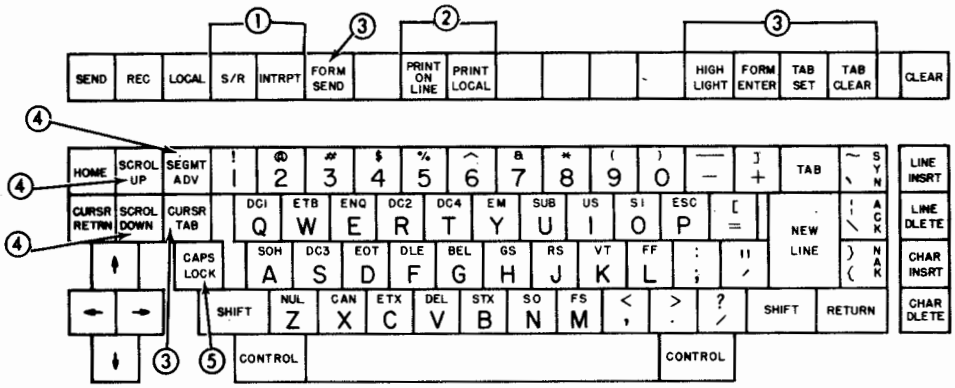

Fractions

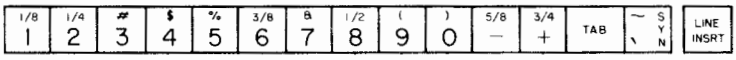

Weather

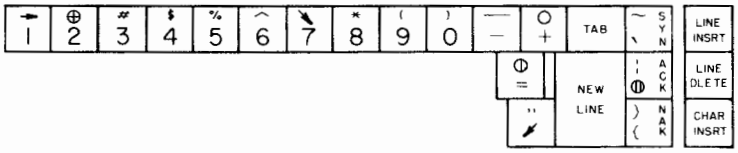

Asynchronous Model 40/0, 40/1, 40/2, and 40/3 (Complete Complement)

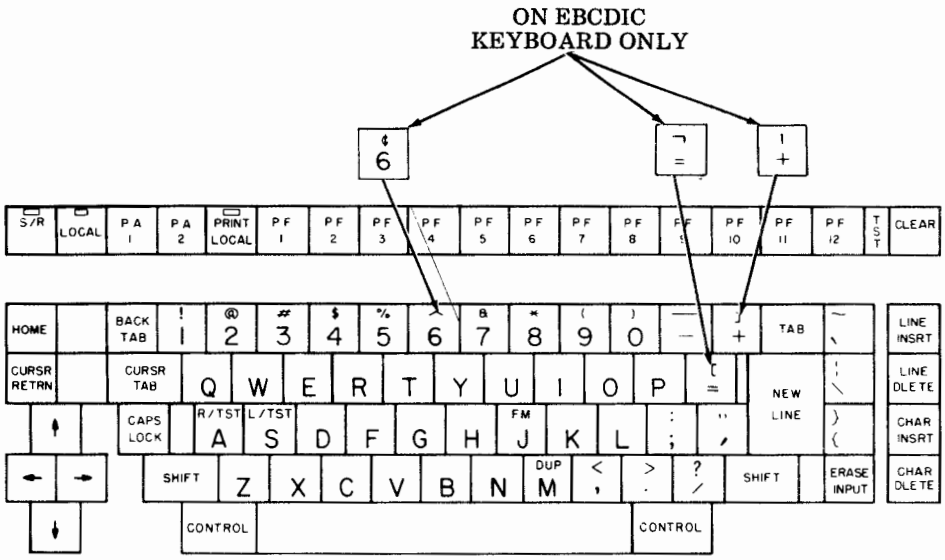

Synchronous Model 40/4 40K104 Opcon (ASCII and EBCDIC)

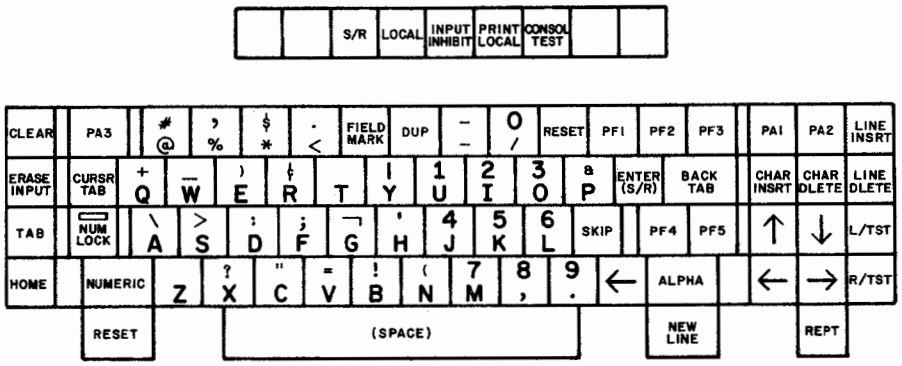

Synchronous Model 40/4 40K105 Opcon
(Internal Numeric Cluster)

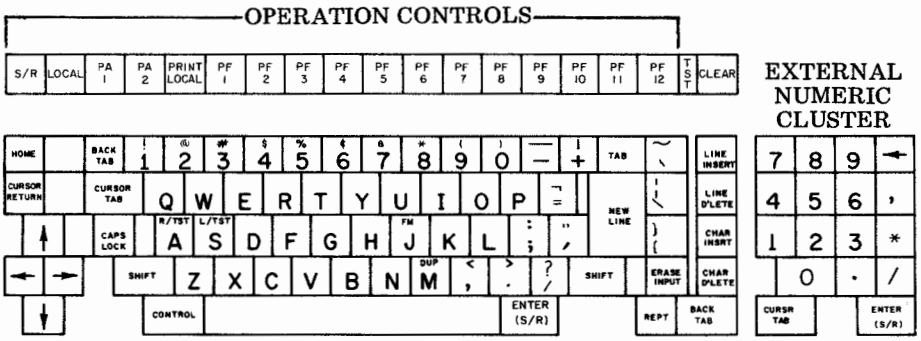

Synchronous Model 40/4 40K203GAB (Wide Opcon)

① Keytops present for S/R (conversation mode) (see Note).

② Keytops present when terminal is equipped with page printer (see Note).

③ Keytops present only if terminal has full edit feature (see Note).

④ Keytops present only if terminal has 48 or 72 line display memory (see Note).

⑤ If CAPS LOCK keytop is not present, keyswitch plunger is latched (down) for monocase (all caps) operation; blocking type keytop is installed over switch housing. First depression latches keyswitch (down); second depression unlatches keyswitch (up).

CAUTION: IF KEYTOP IS PRESENT AND REMOVAL IS REQUIRED, DO NOT REMOVE KEYTOP FROM SWITCH SHAFT UNLESS SWITCH PLUNGER IS OPERATED INTO UNLATCHED UP POSITION.

NOTE: If keytop is not provided within console arrangement, a blocking type keytop (unmarked) is installed over housing of keyswitch. Keytops are not present under blocking cap.

B. SET AND STATION IDENTIFICATION (Cont)

2. IDENTIFICATION (Cont)

Opcon Add-On Features for Model 40 Sets

Expanded Memory

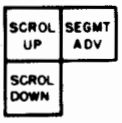

These edit controls are provided when display memory is expanded to either 48 or 72 lines.

48 line expanded memories have two 410014 or 410015 circuit cards (in Segment 1 and Segment 2 positions) in display logic module.

72 line expanded memories have three 410014 or 410015 circuit cards (in Segment 1, 2, and 3 positions) in display logic module.

Full Edit

These edit controls are provided for a complete edit complement.

Conversation Mode

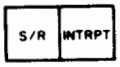

Provided on operator console for "line at a time" or "multiple line" operation except with Teletypewriter Compatible Model 40 Stations where S/R operation is "character at a time".

Page Printer

Provided in operator console arrangement when Model 40 page printer is provided with terminal.

Standard Features for Model 40 ROP Sets

Operator Console

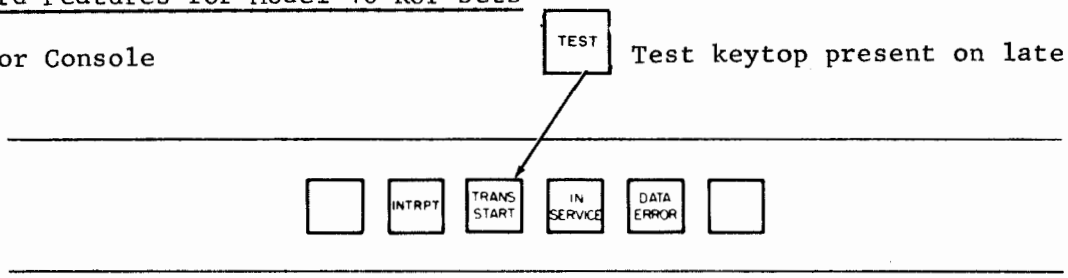

Test keytop present on late design.

Asynchronous Model 40/0, 40/1, 40/2, and 40/3 Operator Console

Standard Features for Model 40 Single Display, Mini, and Maxi Configurations

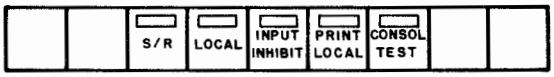

Synchronous Model 40/4

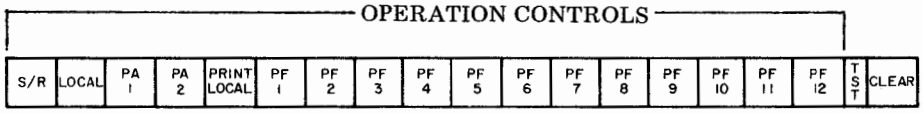

Synchronous Model 40/4

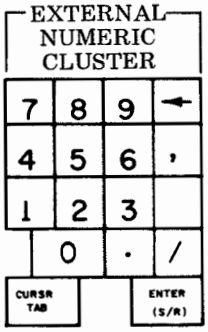

Before assembly, checkout, or servicing, a review of features and field options or other descriptions and records should be made to determine which options, if any, should be changed from the way they were furnished by the factory, or altered during earlier service applications.

A Station Features and Options Record for the station should be maintained with the equipment to facilitate checkout or operation. The blank forms may be duplicated locally and marked up for this purpose.

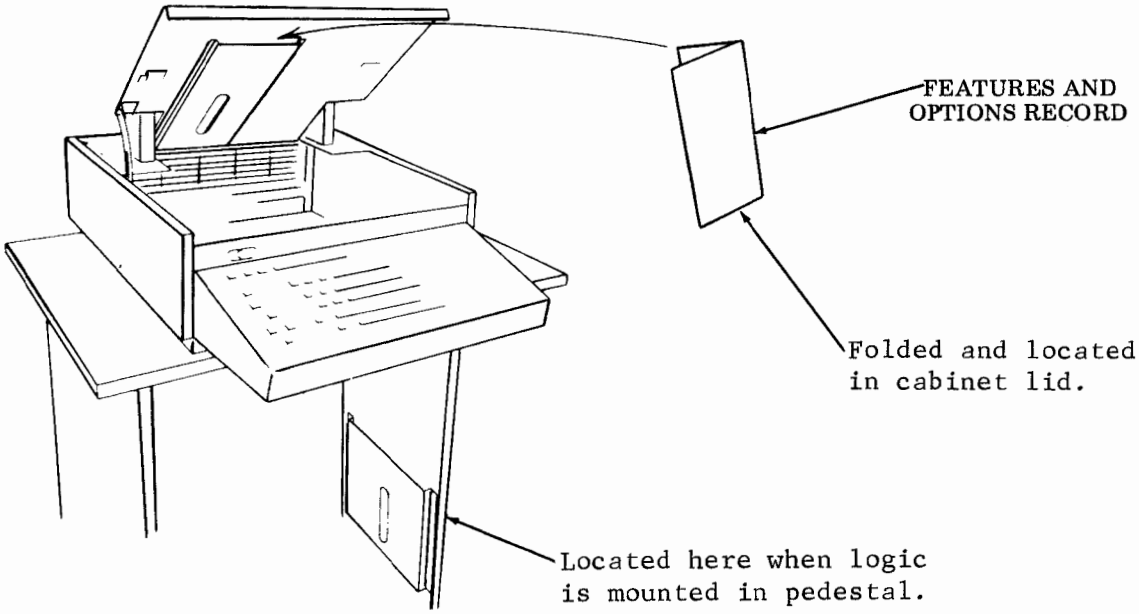

B. SET AND STATION IDENTIFICATION (Cont)

3. OPTIONS FOR MODEL 40 SETS

The Model 40 Set or Station components provide a number of field options to satisfy operating requirements of the user. These options are implemented by switches or screws on the logic cards or straps on the 9140 station controller cards or diodes removed on the integrated controller diode matrix circuit cards. Location of all circuit cards with options can be found in the appropriate individual component sections of this manual.

The following options are grouped according to the type of set. The options in any group apply only to the type of set(s) indicated. Any change in options should be entered on the Station Features and Options Record.

Station Feature and Options Record for Model 40/0, 40/1, 40/2, and 40/3

☒ Check on variable number as furnished.
* Factory optioned.

KD OR KDP CONTROLLER

1.a.	☐		9.a.	☐		36.a.	☐	
1.b.	☐	*	9.b.	☐	*	36.b.	☐	
2.a.	☐		10.a.	☐		37.a.	☐	*
2.b.	☐		10.b.	☐	*	37.b.	☐	
3.a.	☐		10.c.	☐		40.a.	☐	
3.b.	☐	*	11.a.	☐	*	40.b.	☐	*
3.c.	☐		11.b.	☐		41.a.	☐	
3.d.	☐		11.c.	☐		41.b.	☐	*
3.e.	☐		12.a.	☐		42.a.	☐	*
3.f.	☐		12.b.	☐	*	42.b.	☐	
3.g.	☐		13.a.	☐		42.c.	☐	
3.h.	☐		13.b.	☐	*	42.d.	☐	
3.i.	☐		13.c.	☐		43.a.	☐	*
3.j.	☐		13.d.	☐		43.b.	☐	
4.a.	☐		13.e.	☐		44.a.	☐	*
4.b.	☐	*	13.f.	☐		44.b.	☐	
5.a.	☐	*	13.g.	☐		45.a.	☐	
5.b.	☐		13.h.	☐		45.b.	☐	*
5.c.	☐	*	27.a.	☐		46.a.	☐	
5.d.	☐		27.b.	☐	*	46.b.	☐	*
5.e.	☐	*	28.a.	☐		47.a.	☐	
5.f.	☐		28.b.	☐	*	47.b.	☐	*
5.g.	☐	*	29.a.	☐	*	49.a.	☐	
5.h.	☐		29.b.	☐		49.b.	☐	
5.i.	☐	*	29.c.	☐		50.a.	☐	
5.j.	☐		29.d.	☐		50.b.	☐	
6.a.	☐		30.a.	☐	*	50.c.	☐	*
6.b.	☐	*	30.b.	☐		51.a.	☐	*
7.a.	☐		31.a.	☐	*	51.b.	☐	
7.b.	☐	*	31.b.	☐		51.c.	☐	
8.a.	☐		32.a.	☐	*	52.a.	☐	
8.b.	☐	*	32.b.	☐		52.b.	☐	*
8.c.	☐	*	33.a.	☐		53.a.	☐	
8.d.	☐		33.b.	☐	*	53.b.	☐	*
8.e.	☐	*	34.a.	☐	*			
8.f.	☐		34.b.	☐				
8.g.	☐	*	35.a.	☐	*			
8.h.	☐		35.b.	☐				

ROP CONTROLLER 103

3.a.	☐	
3.b.	☐	*
3.c.	☐	
3.d.	☐	
24.a.	☐	*
24.b.	☐	
25.a.	☐	
25.b.	☐	*
25.c.	☐	
25.d.	☐	*
35.a.	☐	*
35.b.	☐	
36.a.	☐	*
36.b.	☐	
38.a.	☐	
38.b.	☐	*

ROP CONTROLLER 303

101.a.		121.a.	*
101.b.		121.b.	
101.c.		122.a.	*
101.d.		122.b.	
101.e.		123.a.	*
101.f.	*	123.b.	
101.g.		124.a.	*
101.h.		124.b.	
101.i.		125.a.	*
101.j.		125.b.	
101.k.		126.a.	*
101.l.		126.b.	
102.a.		127.a.	*
102.b.		127.b.	
102.c.		128.a.	*
102.d.		128.b.	
102.e.		129.a.	*
102.f.		129.b.	
102.g.		130.a.	*
102.h.		130.b.	
102.i.		131.a.	*
102.j.		131.b.	
102.k.		132.a.	*
102.l.		132.b.	
102.m.		133.a.	*
102.n.		133.b.	
103.a.	*	134.a.	*
103.b.		134.b.	
104.a.	*	135.a.	*
104.b.		135.b.	
105.a.	*	136.a.	*
105.b.		136.b.	
106.a.	*	137.a.	*
106.b.		137.b.	
107.a.	*	138.a.	*
107.b.		138.b.	
108.a.	*	139.a.	*
108.b.		139.b.	
109.a.	*	140.a.	*
109.b.		140.b.	
110.a.	*	141.a.	*
110.b.		141.b.	
111.a.	*	142.a.	*
111.b.		142.b.	
112.a.	*	143.a.	*
112.b.		143.b.	
113.a.	*	144.a.	*
113.b.		144.b.	
114.a.	*	145.a.	*
114.b.		145.b.	
115.a.	*	146.a.	*
115.b.		146.b.	
116.a.	*	147.a.	*
116.b.		147.b.	
117.a.	*	148.a.	*
117.b.		148.b.	
118.a.	*	149.a.	*
118.b.		149.b.	
119.a.		150.a.	*
119.b.		150.b.	
119.c.		151.a.	*
119.d.		151.b.	
119.e.		152.a.	*
119.f.		152.b.	
119.g.		153.a.	*
119.h.		153.b.	
119.i.		154.a.	*
119.j.		154.b.	
119.k.		155.a.	*
119.l.		155.b.	
119.m.		156.a.	
119.n.		156.b.	
119.o.		156.c.	*
119.p.		156.d.	
120.a.		157.a.	*
120.b.		157.b.	
120.c.		158.a.	
120.d.		158.b.	*
120.e.		158.c.	
120.f.		189.a.	*
120.g.		189.b.	
120.h.		190.a.	*
120.i.		190.b.	
120.j.			
120.k.			
120.l.			
120.m.			
120.n.			
120.o.			
120.p.			

PRINTER (In ROP of KD and ROP Only)

	I	II
17.a.		
17.b.		
17.c.		*
17.d.		
17.e.		*
17.f.		
17.g.		
17.h.		
17.i.		
17.j.		
17.k.		
17.l.		
17.m.		
17.n.		
17.o.		
17.p.		
18.a.		
18.b.		
18.c.		*
19.a.		*
19.b.		
19.c.		
19.d.		
19.e.		
19.f.		
19.g.		
20.a.		*
20.b.		
21.a.		*
21.b.		
22.a.		
22.b.		*
23.a.		
23.b.		*
39.a.		
39.b.		*
48.a.		*
48.b.		*
54.a.		*
54.b.		
55.a.		*
55.b.		
56.a.		*
56.b.		
57.a.		*
57.b.		
58.a.		
58.b.		*
59.a.		
59.b.		
59.c.		
59.d.		
59.e.		
59.f.		
59.g.		
59.h.		
60.a.		
60.b.		*
61.a.		
61.b.		*
61.c.		

9140 STATION CONTROLLER

1.a.	—	16.c.	
1.b.	—	17.a.	
1.c.	—	17.b.	
1.d.	—	17.c.	
1.e.	—	17.d.	
1.f.	—	17.e.	
1.g.	—	17.f.	
1.h.	—	17.g.	
1.i.	—	17.h.	
1.j.	—	17.i.	
1.k.	—	18.a.	
1.l.	—	18.b.	
1.m.	—	19.a.	
1.n.	—	19.b.	
1.o.	—	19.c.	
1.p.	—	19.d.	
1.q.	—	19.e.	
2.a.		19.f.	
2.b.		20.a.	
3.a.		20.b.	
3.b.		20.c.	
4.a.		20.d.	
4.b.		21.a.	
5.a.		21.b.	
5.b.		22.a.	
6.a.		22.b.	
6.b.		23.a.	
6.c.		23.b.	
6.d.		24.a.	
6.e.		24.b.	
6.f.		25.a.	
7.a.		25.b.	
7.b.		25.c.	
8.a.		25.d.	
8.b.		26.a.	
9.a.		26.b.	
9.b.		26.c.	
10.a.		26.d.	
10.b.		27.a.	
11.a.		27.b.	
11.b.		27.c.	
11.c.		27.d.	
12.a.		27.e.	
12.b.			
13.a.			
13.b.			
14.a.			
14.b.			
15.a.			
15.b.			
15.c.			
16.a.			
16.b.			

SET VARIATIONS

	KD
	KDP
	KD — ROP
	KDP+ROP
	ROP
	Basic Edit
	Full Edit
	S/R Mode
	Monocase
	Upper-Lower Case
	24-Line Display
	48-Line Display
	72-Line Display
	Pedestal
	Paper Winder
	Copyholder
	1000-Character Buffer
	80-Column Friction
	80-Column Tractor
	132-Column Tractor
	410018 Continuous Scroll

B. SET AND STATION IDENTIFICATION (Cont)

3. OPTIONS FOR MODEL 40 SETS (Cont)

Station Feature and Options Record for Model 40/0

BISP-TYPE STATION ARRANGEMENTS FEATURES & OPTIONS RECORD
STATION ARRANGEMENT NO. 1 ☐ 2 ☐ 3 ☐ 4 ☐ 5 ☐

☑ Check as Installed
* Factory Optioned

Page 1 of 2

"DATASPEED" 40 CONTROLLER (PTI) — FULL EDIT

5 (a) Reject NULL	*	☐	5 (b) Accept NULL		☐
5 (c) Reject CR	*	☐	5 (d) Accept CR		☐
5 (e) Reject DELETE	*	☐	5 (f) Accept DELETE		☐
6 (a) Esc. Displayed/No Functions		☐	6 (b) Esc. Not Displayed/Function Enabled	*	☐
7 (a) Vert. Par. Err. Char. Not Displayed		☐	7 (b) Vert. Par. Err. Char. Displayed	*	☐
8 (a) End Page on FF		☐	8 (b) Do Not End Page on FF	*	☐
8 (c) End Page on ETX	*	☐	8 (d) Do Not End Page on ETX		☐
8 (e) End Page on EOT	*	☐	8 (f) Do Not End Page on EOT		☐
8 (g) End Page on GS	*	☐	8 (h) Do Not End Page on GS		☐
9 (a) High Light Not Sent		☐	9 (b) High Light Sent	*	☐
10 (a) Send CR LF		☐	10 (b) Send CR CR LF	*	☐
10 (c) Send LF		☐			
11 (a) Go Local after Send	*	☐	11 (b) Go Receive after Send		☐
11 (c) External Mode		☐			
12 (a) No Form Enter in Local		☐	12 (b) Form Enter Enabled in Local	*	☐
13 (a) Send All (P and Unp.) as Displayed		☐	13 (b) Send All/HT Convert to SPACE	*	☐
13 (c) Send Protect as SPACE		☐	13 (d) Send Protect & HT as SPACE		☐
13 (e) Send Protect as DELETE		☐	13 (f) Send Unptrotect (Unp.) Only		☐
13 (g) Send Unp. and HT at End of Field		☐	13 (h) Send Unp. and HT as SPACE		☐
14 (a) Rec. Select On	*	☐	14 (b) Rec. Select Off		☐
15 (a) Override goes to Rec.		☐	15 (b) Stays in Send or Loc	*	☐
16 (a) Rec. after TDA	*	☐	16 (b) Loc after TDA		☐
16 (c) Home after TDA		☐	16 (d) Stays at Mess. end	*	☐
27 (a) Home Cursor on Transmit		☐	27 (b) Send from Cursor Position		☐

BISP-TYPE STATION ARRANGEMENTS FEATURES & OPTIONS RECORD
STATION ARRANGEMENT NO. 1 ☐ 2 ☐ 3 ☐ 4 ☐ 5 ☐

☑ Check as Installed
* Factory Optioned

Page 2 of 2

2550 CLUSTER CONTROLLER

1 (a) Receiver Selectable Forced		1 (b) Receiver Selectable Not Forced	*
2 (a) Controller Answers Back	*	2 (b) Controller Does Not Answer Back	
3 (a) " " Substitute Character	*	3 (b) Other Sub. Char (Specify) ____	
4 SID Char 1-S1 Card (Specify) ___			
5 (a) Odd Receive Parity	*	5 (b) Even Receive Parity	
6 (a) Controller Receives MCC	*	6 (b) Controller Ignores MCC	
7 (a) Controller Sends MCC	*	7 (b) Controller Does Not Send MCC	
8 (a) Controller Ignores MCC Error		8 (b) Controller Responds to MCC Error	*
9 (a) Substitute Character Used	*	9 (b) Substitute Character Not Used	
10 (a) Controller NAKs On Parity Error	*	10 (b) Controller Doesn't NAK on Parity Error	
11 (a) Controller Transmits MCC	*	11 (b) Controller Doesn't Transmit MCC	
12 (a) Controller Transmits Odd Parity	*	12 (b) Controller Transmits Even Parity	
13 (a) Controller Regenerates Parity	*	13 (b) Transmitter Generates Parity	
14 (a) Controller Regenerates Parity	*	14 (b) Controller Acts on Parity Error	
15 SID Char 1-S2 Card (Specify) ___			
16 SID Char 2-S2 Card (Specify) ___			
17 SID Char 1-S3 Card (Specify) ___			
18 (a) SID Char 2-S3 Card "?"	*	18 (b) SID Char 2-S3 Card Other (Specify) ___	
19 (a) CTS Alarm Enabled	*	19 (b) CTS Alarm Disabled	
20 (a) DTR Always On		20 (b) DTR is a Function of DSR	*
21 (a) CONT RTS Sent		21 (b) CONT RTS Not Sent	*
22 (a) CD Fail Alarm Enabled		22 (b) CD Fail Alarm Disabled	
23 (a) SCTE Enabled		23 (b) SCTE Disabled	*

CDIF814 INTERFACE MODULE (Space provided for 2 options of module.)

30 (a) Responds to Specific Poll (DC1)	*	30 (b) Responds to a General Poll (DC3)	
31 Receive SID 1 (Specify) ____			
32 (a) Receive SID 2 (Specify) ____		32 (b) SID 2 Not Used	
33 (a) Receive SID 3 (Specify) ____		33 (b) SID 3 Not Used	
34 Transmit SID 1 (Specify) ____			
35 (a) Transmit SID 2 (Specify) ____		35 (b) SID 2 Not Used	
36 (a) Transmit SID 3 (Specify) ____		36 (b) SID 3 Not Used	
37 (a) Terminal Forced Into REC Mode		37 (b) Terminal Not Forced Into REC Mode	*
38 (a) Controller Transmits Odd Parity	*	38 (b) Controller Transmits Even Parity	
39 (a) Controller Detects Vertical Parity	*	39 (b) Controller Generates Vertical Parity	
40 (a) Controller Det/Gen Odd Parity	*	40 (b) Controller Det/Gen Even Parity	
41 (a) Controller Sends Overwrite Char Overwrite Char (Specify) ____		41 (b) Controller Does Not Use Overwrite Character	

"DATASPEED" MAGNETIC TAPE

50 (a) Search Char A (Specify)		50 (b) Char A Not Used	
51 (a) Search Char B (Specify)		51 (b) Char B Not Used	
52 (a) Search Char C (Specify)		52 (b) Char C Not Used	
53 (a) Char A — Search Only		53 (b) Char A — Send and Search	
		53 (c) Char A Disabled	*
54 (a) Char B — Search Only		54 (b) Char B — Send and Search	
		54 (c) Char B Disabled	*
55 (a) Char C — Search Only		55 (b) Char C — Control Code Delay	
		55 (c) Char C Disabled	
56 (a) Parity Error — Search Only		56 (b) Parity Error — Search and Send	
		56 (c) Parity Error Disabled	*

CDBU806 BUFFER

2K Memory
4K Memory
6K Memory

Options: None

B. SET AND STATION IDENTIFICATION (Cont)

3. OPTIONS FOR MODEL 40 SETS (Cont)

The options listed below are numbered and provide brief descriptions to facilitate choices available.

1. Interface to Printer (Service 40/1, 40/2, and 40/3)

a. KD-ROP
40C202
40C204
CONTROLLER

EIA →

40C103
40C303

ROPs

b. KDP
40C202
40C204
CONTROLLER

SSI → *

40P101 40P152 40P203
40P150 40P153 40P204
40P151 40P201

PRINTERS

Interface to printers will depend upon the type of printer being used, and for what service. Late design printer logic cards have provisions for an OEM interface (modified EIA) as well as the SSI interface. The ROP sets have their own controllers which convert EIA signals to SSI signals for interfacing to the printers.

PRINTER CODE	DESCRIPTION	COMPATIBLE PRINTER LOGIC CIRCUIT CARD
40P101	FF 80-COLUMN	410640 or 410076
40P102	FF 80-COLUMN (QUIET PRINTER)	410076 only
40P150	TF 80-COLUMN	410640 or 410076
40P151	TF 80-COLUMN	410640 or 410076
40P152	TF 80-COLUMN	410640 or 410076
40P153	TF 80-COLUMN	410640 or 410076
40P154	TF 80-COLUMN	410071 only
40P250	FORMS ACCESS -- 72	410071 only
40P252	FORMS ACCESS -- 80	410071 only
40P253	FORMS ACCESS -- 80	410071 only
40P254	FORMS ACCESS -- 80	410071 only
40P255	FORMS ACCESS -- 80	410071 only
40P200	TF 132-COLUMN	410729 or 410072**
40P201	TF 132-COLUMN	410729 or 410072**
40P202	TF 132-COLUMN	410072 only
40P203	TF 132-COLUMN (REINKER)	410072 only
40P204	TF 132-COLUMN (REINKER, PAPER JAM ALARM)	410072 only

*Factory optioned.

**Use of the 410072 circuit card in a 40P200 or 40P201 printer requires use of a 402980 lower pan assembly. The 402887 modification kit includes the 410072 circuit card and a 402980 lower pan assembly. The 402980 lower pan assembly is compatible with the 410729 or the 410072 circuit card.

2. S/R Send -- Conversational Mode (Service 40/1)

a. DC2 Sent Auto $^{D}C_2$ [T]HE QUICK BROWN FOX $^{D}C_4$*

DC2 is sent when entered by operator. Cursor is placed over the T in THE after entering DC4. Then the SEND key is depressed.

b. DC2 Sent W/Message [$^{D}C_2$] THE QUICK BROWN FOX $^{D}C_4$

DC2 is sent with following data. Cursor is placed over the DC2 after entering DC4. Then the SEND key is depressed.

[ ] = CURSOR

Option 2.a. is used when the remote processor requires advance notice so as to have time to secure additional storage space for the data.

3. EIA Send Receive Data Baud Rate (Service 40/1, 40/2, and 40/3)

KD, KDP and ROP 40/1 and 40/3
40C202
40C103
CONTROLLERS — [D/S] ← a. 1050 BAUD, b. 1200 BAUD, c. 2400 BAUD, d. 1800 BAUD → DISTANT END

40/2
40C204
CONTROLLER — [D/S] — a. 1050 BAUD, b. 1200 BAUD*, c. 2400 BAUD, f. 4800 BAUD, g. 600 BAUD, h. 300 BAUD, i. 150 BAUD, j. 110 BAUD, k. 9600 BAUD → DISTANT END

4. EIA Reverse Channel (Service 40/1, 40/2, and 40/3)

a. Reverse Channel Required To Send

KDP and ROP
RECEIVE INTERRUPT KEY ← DATA / REVERSE CHANNEL → RECEIVED SENT

*Factory Installed Option

B. SET AND STATION IDENTIFICATION (Cont)

3. OPTIONS FOR MODEL 40 SETS (Cont)

4. EIA Reverse Channel (Cont)

a. Reverse Channel Required to Send*

a. Reverse Channel Required to Send

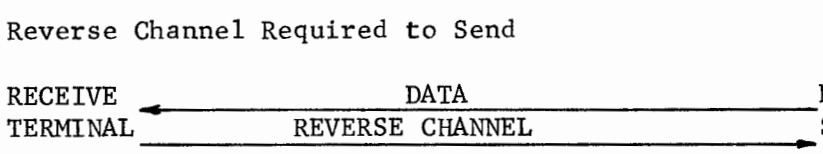

Choice is open, sender and receiver both assured ready for transmission.

b. Reverse Channel Not Required to Send

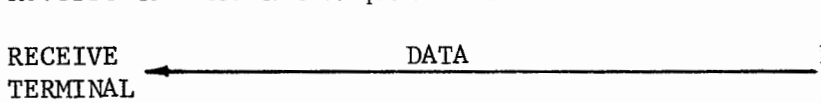

Reverse channel not required or desired.

5. Response to Received Characters
Receipt or Rejection of NUL, CR, and DEL (Service 40/0, 40/1, 40/2, and 40/3)

a. Reject Null

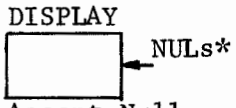

b. Accept Null

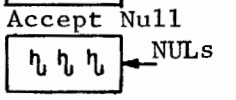

c. Reject CR

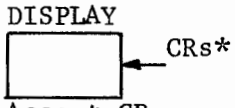

d. Accept CR

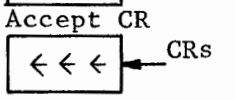

e. Reject Delete

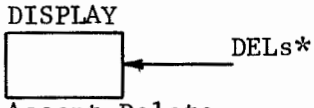

f. Accept Delete

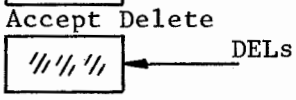

Options 5.a., 5.c., and 5.e. reject characters for specific reasons. For 5.a. and 5.e. the NULs and DELs are stripped from the data stream so that they do not occupy space in the display buffer. When 5.c. is selected, CR is stripped from the data stream so it will not occupy space in the display buffer and may interfere with the normal new line function either because of duplication of the CR character or the lack of it.

NOTE: Only Options 5.a., 5.c., and 5.e. are used with 2550 Cluster Controller.

Receipt or Rejection of DC1 and DC3 (Service 40/1, 40/2, and 40/3)

g. Reject DC1

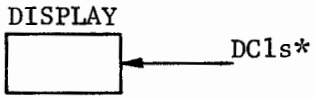

h. Accept DC1

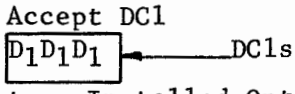

i. Reject DC3

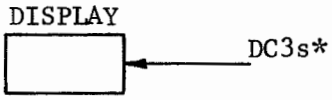

j. Accept DC3

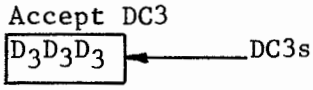

*Factory Installed Option

Options 5.g. through 5.j. (reject and accept control characters DC1 and DC3) apply to Issues 4B and later of the 410674 circuit card.

6. Function of Received (Service 40/0, 40/1, 40/2 and 40/3) (Displayed or Not Displayed)

a. All Escape Sequences Displayed as Received

DISPLAY

E E S_C 3U S_C 4*

ESCAPE SEQUENCES ← RECEIVED

b. All Escape Sequences are Performed as Received but Not Displayed*

(U) *

ESCAPE SEQUENCES ← RECEIVED

◯ = Highlighted

NOTE: Option 6.b. is used with 2550 Cluster Controller.

7. Errored Character on Received (Service 40/1, 40/2, and 40/3)

a. Not Displayed on Vertical Parity Error (Required for Standard 40/2)

DISPLAY

TBE (for THE)

INCORRECT CHARACTER ← RECEIVED

b. Displayed on Vertical Parity Error*

T_B^SE (for THE)

INCORRECT CHARACTER ← RECEIVED

NOTE: Option 7.b. is used with 2550 Cluster Controller.
Send Message Ending Character.

8. Recognition of FF, ETX or GS (Service 40/1, 40/2, and 40/3)
Option (11) Mode After Send (Service 40/1, 40/2, and 40/3)

a. End on FF
or KD, KDP

SEND MODE

FF, ETX OR GS → SENT

c. End on ETX

or TO

g. End on GS
and

LOCAL MODE

11.a. Local (Goes REC on Sent EOT)

*Factory Installed Option

B. SET AND STATION IDENTIFICATION (Cont)

3. OPTIONS FOR MODEL 40 SETS (Cont)

CAUTION: CONTROLLERS USING 410018 CARDS WILL PREVENT MESSAGES BEING SENT WHEN THEY DO NOT CONTAIN END CHARACTERS, AND WILL PUT THE KD, KDP IN LOCAL OR RECEIVE MODE.

a. End on FF
or [SEND MODE] —— FF, ETX, OR GS ——→ SENT ETX used for 40/0
c. End on ETX

or TO

g. End on GS
and [RECEIVE MODE]

11.b. Receive

11.b. NOTE: If DLE EOT is used as a sent disconnect sequence, Option 11.b. will cause REC LAMP to light. DTR stays on and disconnect will not occur.

8.b., 8.d., and 8 h. inhibit FF, ETX, and GS. 11.b. is elected on certain special purpose systems where 11.a. is incompatible.

RECOGNITION OF EOT

e. End of EOT
[SEND MODE] —— EOT ——→ SENT

TO

[RECEIVE MODE] —— EOT ——→ RECEIVED

TO

[LOCAL MODE]

NOTE: 8.f. is elected on certain special purpose systems where 8.e. is incompatible. 8.b., 8.c., 8.f., and 8.h. are used with 2550 Cluster Controller.

11.c. External Mode (must be used when 40/0 service is used, using the 410678 Card).

9. Highlight Data Send (Service 40/0, 40/1, 40/2 and 40/3)
(Escape sequences sent or not sent)

a. Delimiters Not Sent (Except in Form Send Mode)

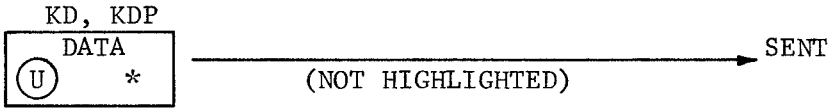

b. Delimiters Sent (Modifies Option 13.)*

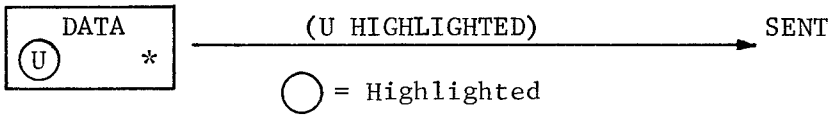

NOTE: Option 9.a. is used with 2550 Cluster Controller.

10. Line Ending Sequence (Service 40/0, 40/1, 40/2, and 40/3)

a. CR LF
KD, KDP
DATA NL ——— CR NL ———→ SENT

b. CR CR LF
DATA NL ——— CR CR NL ———→ SENT*

c. LF
DATA NL ——— NL ———→ SENT

NOTE: 10.c. is required for 40/0 stations using a 2550 or 2541 Controller.

When remote receiver is a character-at-a-time printer, fill characters may be required, therefore, the sender may send an extra CR or two for this purpose.

11. Mode After Send (See Option 8.)

a. Local*
b. Receive
c. External Mode (Must be used when 410678 card is present.)
If DLE EOT is used as a disconnect sequence, do not enable 11.b.

NOTE: Option 11.c. is used with 2550 and 2541 Cluster Controllers.

12. Entry of Protected Data (Service 40/0, 40/1, 40/2, and 40/3)

a. Disabled in Local

PROTECT DATA
cannot be entered from keyboard

*Factory Installed Option

B. SET AND STATION IDENTIFICATION (Cont)

3. OPTIONS FOR MODEL 40 SETS (Cont)

12. Entry of Protected Data (Cont)

b. Enabled in Local*

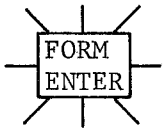

PROTECT
can be entered from keyboard

If only certain stations in the system will be authorized to prepare or revise protected data forms, elect Option 12.b. for them and Option 12.a. for all other stations in the system. (All stations will be able to display protected data regardless of which option is chosen.)

NOTE: Option 12.b. is used with 2550 Cluster Controller.

13. Send Variations (Service 40/0, 40/1, 40/2, and 40/3)

These options can be overridden via FORM SEND

Protected Data Send Options
(Options 13.a., 13.b., 13.c., 13.d., 13.e., 13.f., 13.g., and 13.h.)

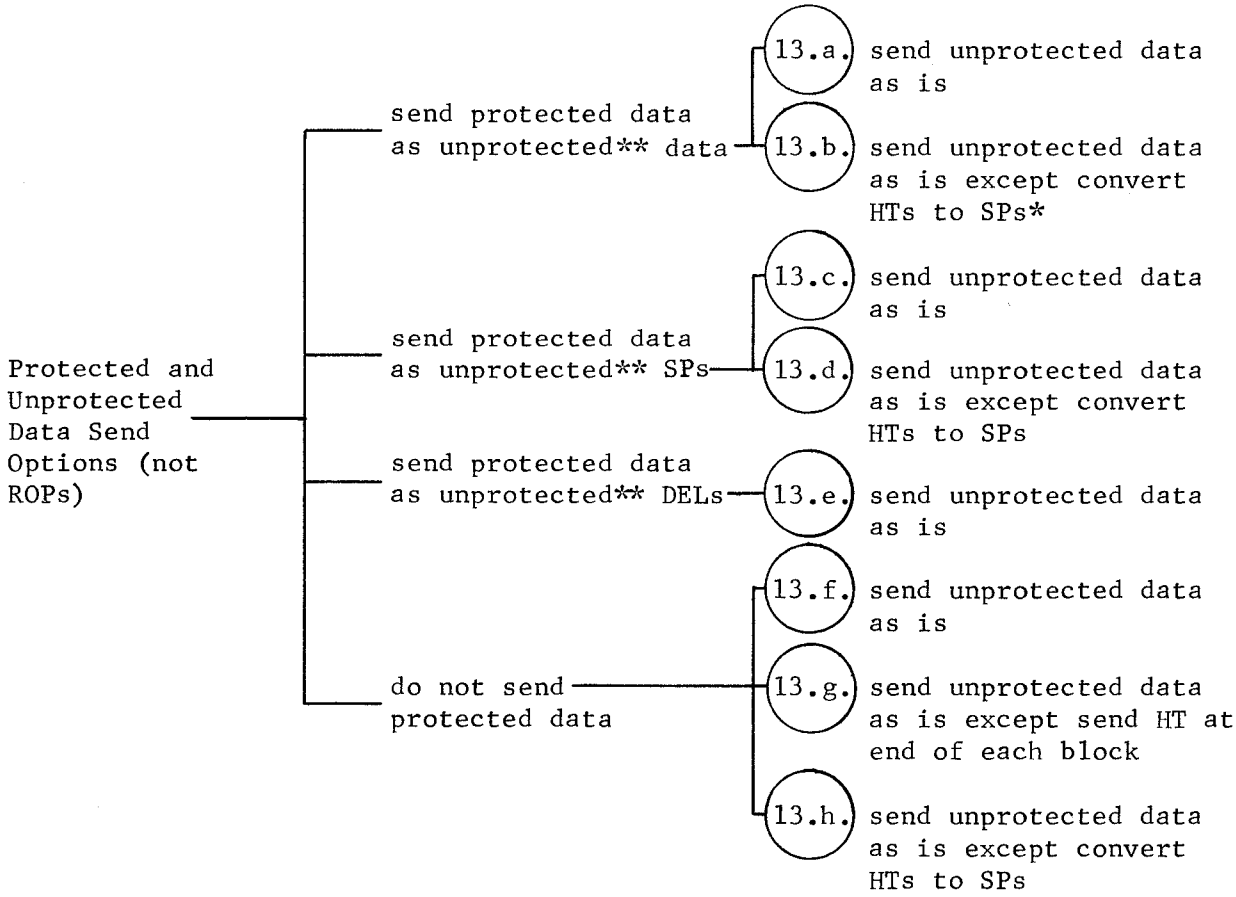

**not delimited, ie, not preceded by ESC W nor followed by ESC X

*Factory Installed Option

13.a., b., c., d., and e. Protected Data sent as other than protected.

Used when protected and unprotected data are required at the computer and/or the receiving station.

Use 13.b. when HTs** appear in data, when they cause errors in the format at the receive station. When this is not the case, use Option 13.a. Options 13.c. and 13.d. are used when protected data is preprinted on a business form.

**HT = Horizontal Tab

Option 13.d. is used over 13.c. when HTs appear in data anyway, as a result of prior reception, or operator preference for TAB key over CURSOR TAB key, otherwise, use 13.c. Option 13.e. causes protected data to be sent as unprotected DELETES used for special purpose application.

NOTE: Option 13.d. is used with 2550 Cluster Controller, 806 and 814 Module.

13.f., g., and h. Protect Data Not Sent at all.

Used where either the computer or the receiving station already has the protected data.

Use 13.f. where operator enters HT after last character entered in each unprotected field, when variable field lengths are used. Use 13.g. when the HTs are generated for the operator at the end of each unprotected field, where a fixed number of characters are sent by the computer regardless of the number of characters entered by the operator.

Option 13.h. eliminates any HTs that might be in the data, where neither the computer nor the receiving stations want protected data.

Options 13.f. and 13.g. HT will cause the receivers to tab to already existing protected data at the receivers. Option 13.h. disregards any protected data.

14. Receive Selectable (Service 40/0) PTI

a. KD, KDP

RECEIVE SELECTABLE (ON)	Terminals when not in Send or Local will be in Receive mode. Does not require the receipt of receive selectable from the 2550 Controller.*

b.

RECEIVE SELECTABLE (OFF)	Terminal must be put in Receive mode by depressing the Receive key.

NOTE: Option 14.a. is used with 2550 Controller and 814 Module.

*Factory Installed Option

B. SET AND STATION IDENTIFICATION (Cont)

3. OPTIONS FOR MODEL 40 SETS (Cont)

15. Local and Send Mode Override (Service 40/0)

a. Goes from Send or Local to Receive

KD, KDP

[SEND OR LOCAL] ← RECEIVE MESSAGE (SEND or LOCAL OVERRIDE)

to

[RECEIVE]

b. Stays in Local or Send*

[SEND OR LOCAL stay in their modes] ← NO OVERRIDE

NOTE: Option 15.a. is used with 2550 and 2541 Cluster Controllers.

16. Mode After TDA (Service 40/0) PTI (Parallel Terminal Interface)

a. Goes to Receive*

KD

[SEND] ← AFTER TDA (transmit Data acknowledge)

to

[RECEIVE]

b. Goes to Local

[SEND] ← AFTER TDA

to

[LOCAL]

c. Cursor Goes to Home

[☐ CURSOR GOES TO HOME]

*Factory Installed Option

NOTE: Options 16.b. and 16.c. are used with 2550 and 2541 Cluster Controllers.

d. Cursor Stays at Message End*

CURSOR STAYS AT MESSAGE END ☐

Printer (Options 17. through 23.)

Since there are a variety of printers, options are listed according to printer circuit cards (early and late design). See listing under Option 1.

17. Printer Right Margin (Service 40/0, 40/1, 40/2, 40/3, and 40/4)

80-column 410640 Circuit Card

73	74	75	76	77	78	79	80
(17.d.) Last Character on 79th Column							(17.c.) Last Character on 80th Column*

80-column 410071 and 410076 Cards

25 ——— to ——— 79 80

(17.d.) (17.c.)*

NOTE: To implement Option 17. on the 410071 card of the forms access 72-column printer (40P250) refer to the bottom plate on the printer for instructions or the 355 Printer Manual.

132-column 410072 Card

73 ——— to ——— 131 132

(17.f.) Last Character on 131st Column (17.e.) Last Character on 132nd Column*

NOTE: Option 17.c. is used with 2550 Cluster Controller.

132-column 410729 Card

121	122	123	124	125	126	127	128	129	130	131	132
17	17	17	17	17	17	17	17	17	17	17	17e

(17.f.)

*Factory Installed Option

B. SET AND STATION IDENTIFICATION (Cont)

3. OPTIONS FOR MODEL 40 SETS (Cont)

17. Printer Left Margin (Service 40/1, 40/2, 40/3, and 40/4)

80-column 410071 and 410076 Cards

1 — 2 ——— to ——————— 13
(17.a.) (17.b_2.) to (17.b_{13}.)*

132-column 410072 Card

1 — 2 ——— to ——————— 13
(17.a.)* (17.b_2.) to (17.b_{13}.)

18. Paper Feedout (Service 40/0, 40/1, 40/2, 40/3, and 40/4)

a. No Paper Feed Out

b. Paper Feed Out on DSR Loss -- 16 Lines

c. Paper Feed Out on DSR Loss or ETX*

Message separation required after end of each message and message separation at end of each reception

NOTE: Option 18.c. is used with 2550 Cluster Controller.

Regardless of the previous options, line feed or manual paper advance will cause line feed(s).

Refer to Printer Manual 355 for option switch setting for Options 18.a., b., and c.

19. Printer Errored Character Symbol (Service 40/0, 40/1, 40/2, 40/3, and 40/4)

a. Printed on Even Parity Error*

T ≡ E (for THE)	← T(INCORRECT CHARACTER)E EVEN PARITY	RECEIVED

b. Printed on Odd Parity Error

T ≡ E (for THE)	← T(INCORRECT CHARACTER)E ODD PARITY	RECEIVED

c. Printed on Parity Error

TBE (for THE)	← T(INCORRECT CHARACTER)E NO PARITY ERROR	RECEIVED

*Factory Installed Option

d. Printers with 96 Character Set

e. Printers with 64 Character Set

f. Printers with Extended ASCII (To be locally engineered.)

g. Printers with Less Than 64 Characters

NOTE: Options 19.a., d., or e. are used with 2550 Cluster Controller.

20. Printers Line Feed Switch (Service 40/0, 40/1, 40/2, 40/3, and 40/4)

a. Single*

b. Double

NOTE: Option 20.a. is used with 2550 Cluster Controller

21. Foldover on Up-Low Printer (Service 40/1, 40/2, 40/3, and 40/4)

Used on systems to be converted from monocase to full ASCII (UP-LOW)

a. Lower Case and Upper Case Print*

PRINTER WITH FULL ASCII TYPE CARRIER PRINTS AS MONOCASE	← As printers are being converted from monocase to full ASCII.

b. Lower Case Prints as Upper Case

PRINTER WITH FULL ASCII TYPE CARRIER PRINTS AS FULL ASCII	← After all printers have been converted to full ASCII.

22. Foldover on Monocase Printer (Service 40/1, 40/2, 40/3, and 40/4)

Used on systems with all monocase terminals sending only monocase characters.

a. Lower Case Prints as Error Symbol

PRINTER WITH MONOCASE TYPE CARRIER	← Receipt of any character other than monocase will be printed as ≡A≡ for lower case a, b, c, etc.

Used on systems with a mixture of monocase and full ASCII terminals sending full ASCII.

b. Lower Case Prints as Upper Case*

PRINTERS WITH MONOCASE TYPE CARRIER	← Receipt of a lower case character will be printed as upper case equivalent; A for a, etc.

*Factory Installed Option

B. SET AND STATION IDENTIFICATION (Cont)

3. OPTIONS FOR MODEL 40 SETS (Cont)

23. Extended ASCII on Printer (Service 40/1, 40/2, and 40/3)

a. Prints Extended ASCII Characters Using the 8th Bit for Character Selection Instead of Parity Check (No Parity).

b. Does Not Print Extended ASCII Characters.*

24. Odd/Even Character Parity Check (Service 40/1 and 40/3)

a. Even Vertical Parity (Response for Odd Parity)*

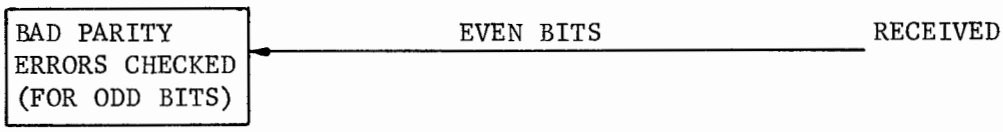

b. Odd Vertical Parity (Response for Even Parity)

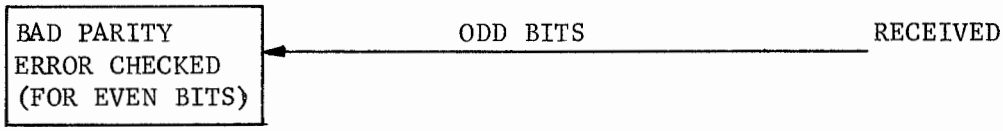

25. Response to Receiving Parity Error For ROP (Service 40/1 and 40/3)

a. Printer Receives Spacing Character With Eighth Bit Mark

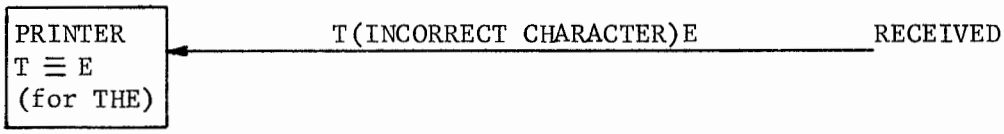

b. Printer Receives Character Even Though it has Parity Error*

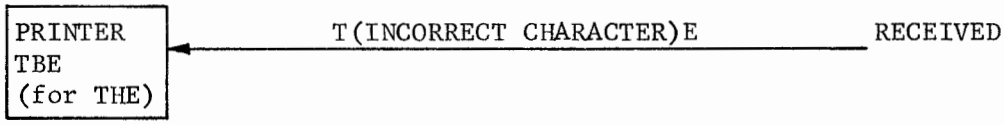

c. DATA ERROR Key Lights

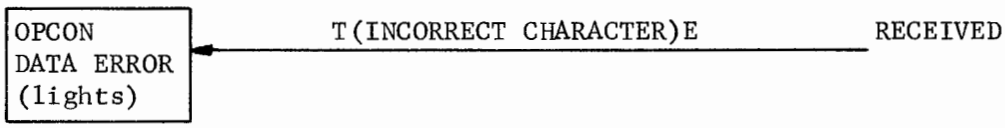

d. DATA ERROR Key Does Not Light*

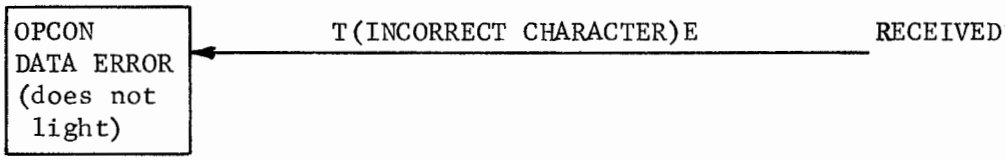

*Factory Installed Option

26. Trans Start is Always Operable Off-Line (ROP) to Generate Local Test Message.

27. Message Start (Service 40/0, 40/1, 40/2, and 40/3)

a. Home on Transmit

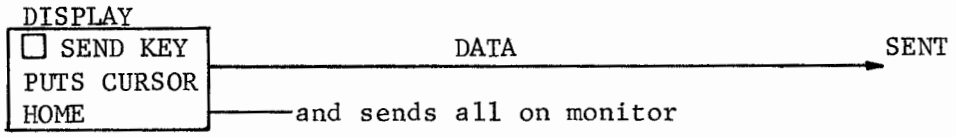

NOTE: Almost always 40/3.

b. Send From Cursor*

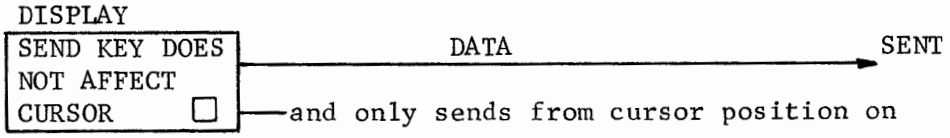

28. Disconnect on Loss of Carrier (Service 40/1, 40/2, and 40/3)

a. Disconnect After 45 Seconds*

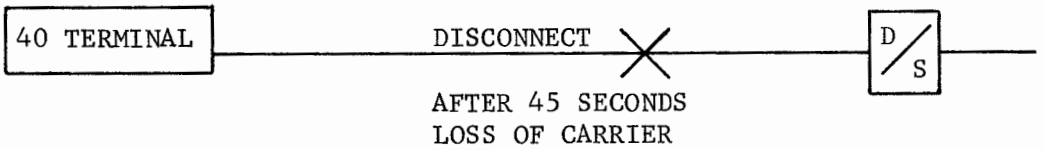

b. Does Not Disconnect -- Timer Disabled

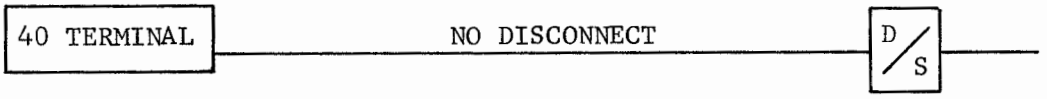

NOTE: Does not disconnect in S/R Mode for 40/1 and 40/2.

29. Printer Message Mode (Service 40/2 and 40/3)

a. When in Print On-Line Mode, Copies Display in Send or Copies Line in Receive or Local*

Print on-Line (POL)

MANUAL AND REMOTE CONTROL	Option 47.a.	40/2 only	MANUAL -- KEYBOARD
MANUAL ONLY	Option 47.b.		REMOTE -- DC2 and DC4

*Factory Installed Option

B. SET AND STATION IDENTIFICATION (Cont)

3. OPTIONS FOR MODEL 40 SETS (Cont)

This option causes the printer to print sent messages when the station is sending and received messages when the station is receiving, if PRINT-ON-LINE key has been depressed. This option is of interest where it is desired to have the operator decide whether to print each sent and received message or not.

b. Permanent Print On-Line

40/2 only

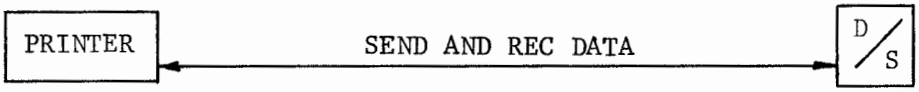

PRINT ON-LINE (POL) not operator controlled

Prints record of all data sent and received

c. Permanent Print On-Line, Received Data Only

40/2 Only

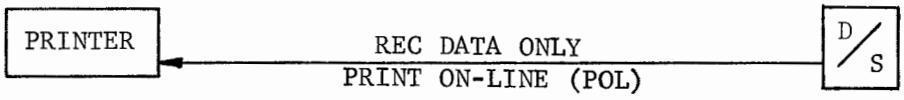

Not operator controlled

Prints only received data

d. When in Print On-Line, Copies Received Data When in Receive or Local

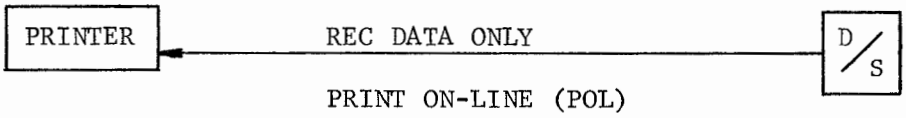

MANUAL AND REMOTE CONTROL Option 47.a.
MANUAL ONLY Option 47.b.
} 40/2 only

Manual -- Keyboard
Remote -- DC2 & DC4

This option causes the printer to print only received messages when the PRINT ON-LINE key is depressed. This option is of interest where it is not desired to print messages as they are being sent, either because a print-out is not needed, a print-out was made prior to transmission by means of the PRINT LOCAL key, or the station included its address among the addresses of the stations to receive the message. It is also of interest where the printer must always be ready to receive and print an incoming message, in which case the PRINT ON-LINE key would normally be left depressed.

Options 30., 31., 32., 33., and 34. are not applicable to 40/0, 40/1, 40/2, and 40/4.

30. Message Preparation (Service 40/3)

    a. Automatic Cursor Home and Send Mode on Opcon Entry of Message Ending Character*
    b. Manual Cursor Home and Send Mode on Opcon Entry of Message Ending Character

31. KD Forced to Receive Mode When Alarm Lead is On

    a. Independent of Printer Mode or Alarm*
    b. Dependent on Printer Mode or Alarm
       (Goes Receive Only if in Print On-Line Mode)

32. Printer Access From Line (When PRINT ON-LINE Lamp is On)

    a. If KD is in Send, Receive, or Local Mode*
    b. If KD is in Receive Mode Only

33. 9140 Controller Mode

    a. Full Duplex (FDX)
    b. Half-Duplex (HDX)*

34. Control Signal Restrictions

    a. RTS Can Turn On When STR is On*
    b. RTS Cannot Turn On When STR is On

35. Printer Motor Control (Service 40/1 and 40/3)

    a. "Data Set Ready" Controls Printer Motor*

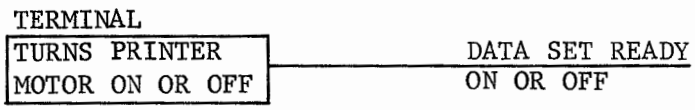

    b. Carrier Detect Controls Printer Motor

    35.a. is used for switched network.

    35.b. is used for multipoint private line 40/3 service

36. Printer Paper Alarm (Service 40/1)

    a. Low Paper Does Not Affect STD*

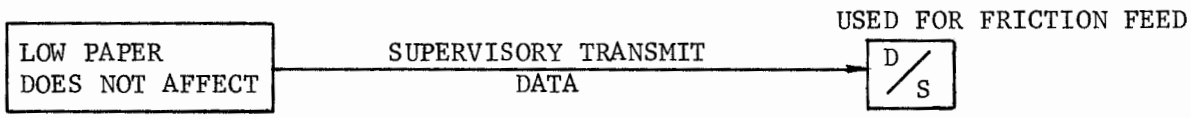

*Factory Installed Option

B. SET AND STATION IDENTIFICATION (Cont)

3. OPTIONS FOR MODEL 40 SETS (Cont)

36. Printer Paper Alarm (Cont)

b. Low Paper Drops STD Immediately

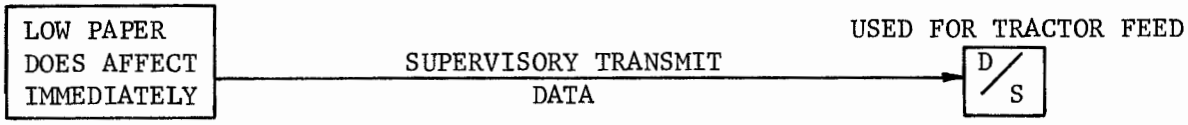

36. Printer Paper Alarm (Service 40/1 and 40/3) ROP

a. Paper Alarm Affects "Data Terminal Ready" at End of Call. DTR Held Off Until Paper is Restored*

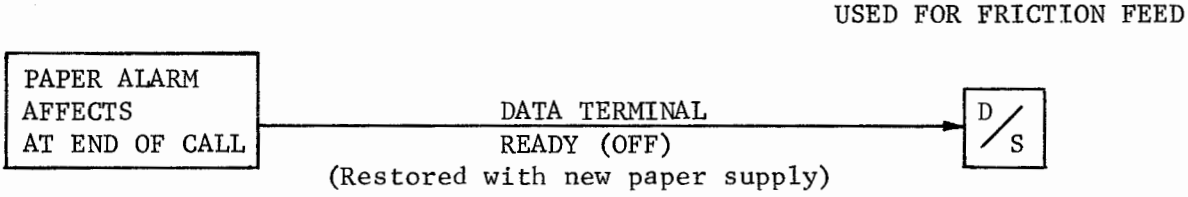

b. Paper Alarm Affects "Data Terminal Ready" Immediately. DTR Held Off Until Paper is Restored

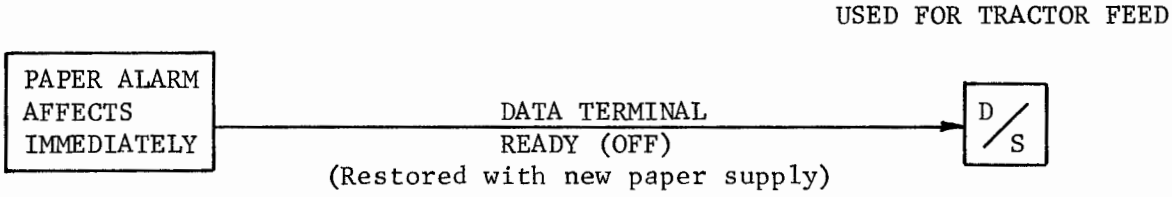

37. CTS Required for Sending (Service 40/3)

a. CTS Signal Required for Sending*

b. CTS Signal Not Required for Sending

Option 37.a. is required for multipoint private line operation (See 9140 -- M40 options). Option 37. is not applicable to 40/0, 40/1, and 40/2.

38. Data Stacking (Service 40/1, 40/2, and 40/3)

a. Enable Data Stacking

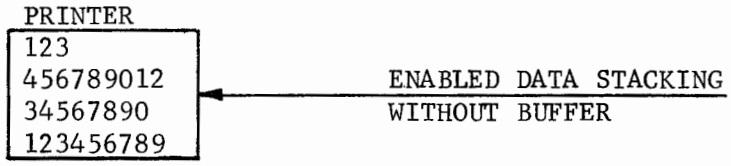

*Factory Installed Option

b. Disable Data Stacking*

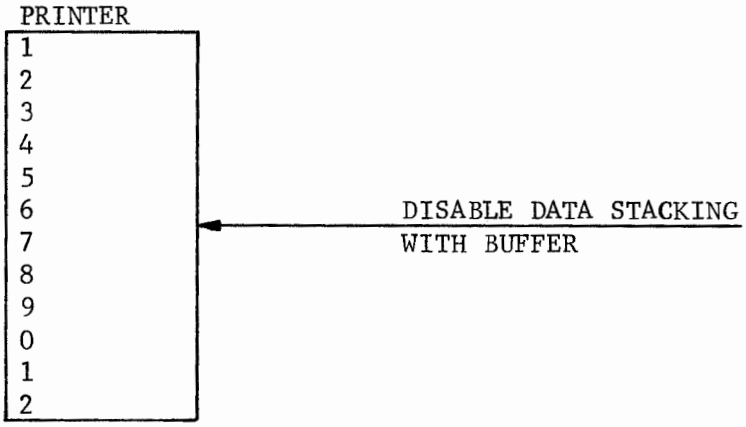

39. Tractor Printer Forms Switch (Service 40/1, 40/2, 40/3, and 40/4)

a. On

b. Off*

NOTE: Option 39.a. is used with 2550 Cluster Controller.

40. Go Receive on Sending CR (←) (Service 40/0, 40/1, 40/2, and 40/3)

a. Go Receive on Sending CR

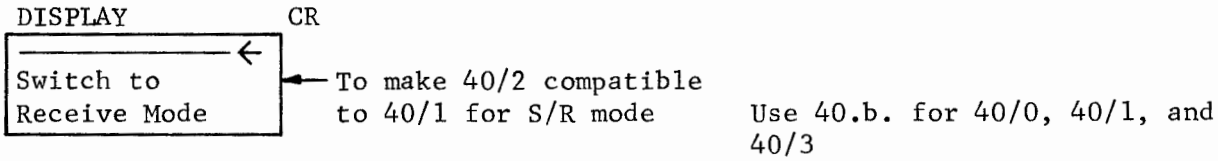

b. Do Not Go Receive on Sending CR*

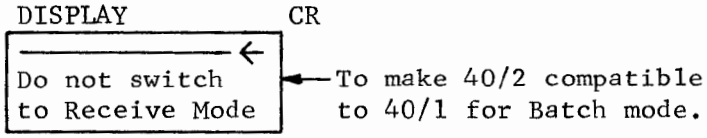

EOT causes terminal to switch to Receive mode regardless of Option 40.

41. Mode of Operation (Service 40/2)

a. Half-Duplex

b. Full Duplex (use this option for 202-type data set)*

*Factory Installed Option

B. SET AND STATION IDENTIFICATION (Cont)

3. OPTIONS FOR MODEL 40 SETS (Cont)

41. Mode of Operation (Cont)

This option applies to S/R mode only. Batch mode is always half-duplex. 41.b. must be activated if transmitted data is looped back for "local copy" by modem, or if computer uses "echoplex" technique.

In Half-Duplex mode, keyboarded data is transferred to both line and local display. Simultaneous keyboarding and receipt of characters from line will cause errored characters on the display.

42. Parity Generation (Service 40/2)

a. Send Even Parity*

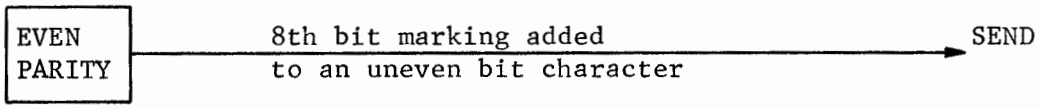

b. Send Odd Parity

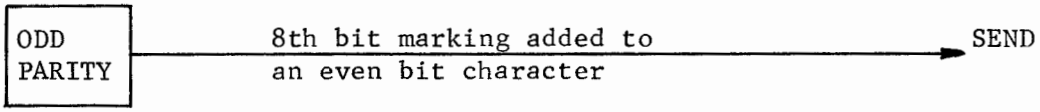

c. Send 8th Bit as Mark

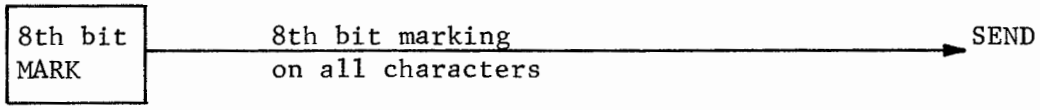

d. Send 8th Bit as Space

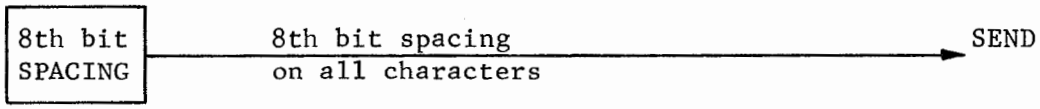

43. Stop Bit Generation (Service 40/2)

a. Send One Stop Bit*

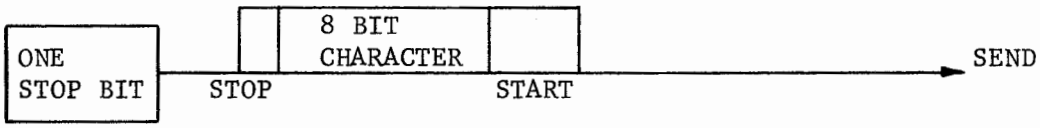

b. Send Two Stop Bits

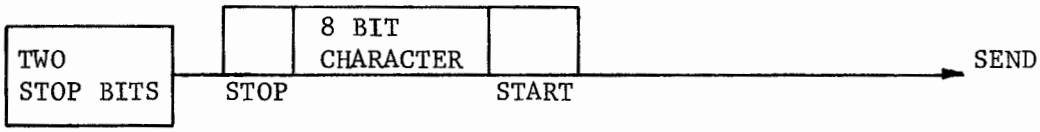

*Factory Installed Option

44. EIA Received Data (Service 40/2)

a. Enable EIA Receive Data*

Enable

103A, 113J and 212A DATA SETS	2 WIRE	Use EOT for disconnect EIA full duplex
202 DATA SET	2 WIRE	Use DLE-EOT for disconnect EIA half duplex

a. Enable

b. Disable EIA Receive Data

Disable

20 - 60 MILLI-AMP		Current Interface

45. Current Loop Data (Service 40/2)

a. Enable Receive Data From Current Loop

Enable

20 - 60 MILLI-AMP	
103A, 113J and 212A DATA SETS	2 WIRE

b. Disable

b. Disable Receive Data From Current Loop*

Disable

202 DATA SET	2 WIRE

46. Interface Select (Service 40/2)

a. 103-Type Modem Interface or 20/60 Milliampere Interface (also 113A)

103A, 113J and 212A DATA SETS	2 WIRE	Line drops on EOT
20 - 60 MILLI-AMP	2 WIRE	

a.

b. 202-Type Modem Interface*

202 DATA SET	2 WIRE

*Factory Installed Option

B. SET AND STATION IDENTIFICATION (Cont)

3. OPTIONS FOR MODEL 40 SETS (Cont)

47. Printer Interface (Service 40/2)

Used with Options 29.a. and d. Auto-answer active for Option 47.a. regardless of mode of POL key.

a. Enable Printer Interface

b. Disable Printer Interface*

48. Incomplete Form Suppresses Paper Alarm (Service 40/1, 40/2, 40/3, and 40/4)

On new printer cards 410071, 410072, and 410076

a. No (Paper out not gated with form out)*

b. Yes (Paper out gated with form out. On 48.b. paper out does not occur until the form out contact closes and stops form out and paper alarm.)

49. Interrupt Feature (Service 40/2)

a. Enable — INTRPT — Keytop enables KD Interrupt Feature
Activates reverse channel
(49.a. must use SSI Interface Option 1.b.)

b. Disable — To Disable Interrupt Feature on KD Stations, Place a Blocking Keytop Over the Interrupt Key on the Operator Console.

Blocking keytop disables KD Interrupt Feature

NOTE: Issue 2A or earlier, 410770 circuit card assemblies require the circuit path (component side) between MLB6-1 and the plated through hole be cut in addition to programming C7 switches. (The C10 pack is not present on Issue 2A or earlier.) Issue 3A and later cards require programming of C7 and C10 option switches only (land cut is not required).

Printer Options

On new printer cards 410071, 410072, and 410076

50. Action Upon Printer SSI Loss (Service 40/2 and 40/3)

a. Go Local and Hold (Power off to reset)

b. Go Local and Release (SEND or RECEIVE key to reset)

c. No Mode Change*

*Factory Installed Option

Print on-line (POL) turned off for 50.a., b., and c. Card issue 1 will not change mode (and POL stays on) if SSI fails. Card issue 2 will not change mode (but POL goes off) if SSI fails.

51. Remote Control (Service 40/2 and 40/3)

a. 4210 Character Control*

b. 9140 POL Control

c. 212A Data Set Operation 40/2 Only

Card issues 1 and 2 are permanently equipped with Option 51.a.

If Options 51.b. and 53.a. are selected, cut Strap A. Otherwise, Strap A must be left intact.

52. Print On-Line Control (Service 40/2 and 40/3)

a. Copy all Sent Data

b. POL as Determined by Option 29.*

POL is automatically turned on when SEND is lighted for Option 52.a. Card issues 1 and 2 are permanently equipped with Option 52.b. Switch pack C10 is only present on Issue 3A or later circuit card. Selection of Option 52.a. does not allow use of DC2 and DC4 printer motor control in the S/R mode. Option 52.b. must be selected if DC2 and DC4 operation is required.

53. Printer Motor Hold Timer (Service 40/2 and 40/3)

a. Enabled (See Option 51.)

b. Disabled*

If Option 53.a. is selected, printer motor is held on for two minutes following end of message. This is useful if messages are ever less than two minutes apart. Card issue 1 is equipped with Option 53.b. Card issue 2, labeled "Motor hold option" is equipped with Option 53.a. Card issue 2 not labeled "Motor hold option" is equipped with Option 53.b.

54. Printing of Escape Sequences Suppressed
(Service 40/1, 40/2, 40/3, and 40/4)

a. Character After ESC Printed as Received*

b. Printing of Character after ESC Suppressed

Final characters after ESC -- ETX, EOT, NL, VT, FF, CR, SO, SI, SUB, and ESC should not be used; also any character from Column 2 from the ASCII code chart should not be used.

<u>NOTE:</u> Option 54.b. is not used in 40/2 applications.

*Factory Installed Option

B. SET AND STATION IDENTIFICATION (Cont)

3. OPTIONS FOR MODEL 40 SETS (Cont)

55. Shift In/Shift Out Detection (Service 40/1, 40/2, 40/3, and 40/4)

a. SI/SO Detection Not Used*

b. SI/SO Detection Enables Printing Additional Characters

Shift out involves an additional set of 94 graphic characters. Shift in permits reuse of standard set of graphic characters.

56. Friction Feed/Tractor Feed Printer (Service 40/1, 40/2, 40/3, and 40/4)

a. Friction Feed Printer -- Motor Held On After Paper Alarm.*

b. Tractor Feed Printer -- Motor Turned Off After Paper Alarm.

Option 56. applies only to the 410076 circuit card (FF)

57. SSI/OEM Interface (Service 40/1, 40/2, 40/3, and 40/4)

OEM = EIA modified

a. SSI -- Standard Serial Interface*

b. OEM -- Original Equipment Manufacture

58. Idle Line Motor Control (Service 40/1, 40/2, 40/3, and 40/4)

a. Disabled -- Motor Held On Indefinitely During Idle Line*

b. Enabled -- Motor Turned Off After 40-Second Idle Line

The idle line timer option, when enabled, provides a 40 second marking line time out, commencing from the receipt of the last data character and terminating when the printer logic automatically turns off the printer motor and DTR.

*Factory Installed Option

59. Speed Selection (Service (OEM only) 40/1 and 40/2)
(Applies only when Option 57.b. is selected)

a. 75 baud

b. 150 baud

c. 300 baud

d. 600 baud

e. 1200 baud

f. 2400 baud*

g. 4800 baud

h. 9600 baud

60. Auxiliary Alarm (Service 40/1 and 40/2)

a. Enable

b. Disable*
This option has been provided for a possible future alarm sensing mechanism option

61. Regulator Grounding (Service 40/1 and 40/2)

a. SSI

b. OEM Frame Ground at Printer*

c. OEM Frame Ground External to Printer

Whether 61.b. or 61.c. is used will depend on the type of equipment's power supply driving the printer.

Options 62. through 69. are reserved for future use.

Options for 40AB101/AA and 40CAB101/AC Answer-Back

70. Answer-Back Message

a. Coded

b. Not Coded*

71. Answer-Back on Enq

a. Yes*

b. No

*Factory Installed Option

B. SET AND STATION IDENTIFICATION (Cont)

3. OPTIONS FOR MODEL 40 SETS (Cont)

72. Disconnect Timer (45 seconds)

a. Disconnect on Loss of Carrier

b. Disconnect on Loss of Reverse Channel

c. Disable Disconnect Timer*

NOTE: Option 72. does not apply to 40AB101/AA answer-back unit.

73. Reversed Channel Required to Send

a. Yes

b. No*

74. Answer-Back on Auto Answer

a. Yes*

b. No

75. Local Copy of Answer-Back

a. Yes

b. No*

76. Parity

a. Even*

b. Odd

77. Data Bits (Excluding Parity Bit)

a. 5 Bits

b. 6 Bits

c. 7 Bits (ASCII)*

d. 8 Bits

*Factory Installed Option

78. Stop Bits

a. 1 Stop Bit*

b. 2 Stop Bits

79. Baud Rate

a. 75

b. 110

c. 150

d. 300

e. 1050

f. 1200*

g. 1800

h. 2400

i. 4800

j. 9600

NOTE: Options 79.e. and f. are the only two options used with 40AB101/AA answer-back unit.

80. Answer-Back on "Here-Is"

a. No*

b. Yes

Options 81. through 100. are reserved for future use.

*Factory Installed Option

B. SET AND STATION IDENTIFICATION (Cont)

4. OPTIONS FOR INTEGRATED CONTROLLER ROP

101. Operation Speed (Service 40/1, 40/2, and 40/3)

ASYNCHRONOUS CONTROLLERS 40C303AA/001 AND 40C303AD

CONTROLLER OPTIONS -- 410140 VARIABLE BIT TIMER CARD 40C303AA/001	CONTROLLER OPTIONS -- 410734 DIODE MATRIX CARD 40C303AD
101. Operating Speed	
a. 110 Baud ☐	g. 1800 Baud ☐
b. 150 Baud ☐	h. 2100 Baud ☐
c. 300 Baud ☐	i. 2400 Baud ☐
d. 600 Baud ☐	j. 3000 Baud ☐
e. 1050 Baud ☐	k. 3600 Baud ☐
f. 1200 Baud* ☐	l. 4800 Baud ☐

NOTE 1: Be sure that the chosen speed matches the capabilities of the communications facilities to be used.

NOTE 2: To activate controller options and for associated option notes, refer to Part 7 of this manual.

*Factory Installed Option

For more in-depth option description refer to Part 7 of this manual.

410141 or 410734 Diode Matrix Circuit Card

102.	Variable Characters for Multipoint Private Line Operation	Diode Assignment Row	Diode Assignment Column
a.	CDC No. 1, Character 1	R1	b0-b6
b.	CDC No. 1, Character 2	R2	b0-b6
c.	CDC No. 2, Character 1	R3	b0-b6
d.	CDC No. 2, Character 2	R4	b0-b6
e.	CDC No. 3, Character 1	R5	b0-b6
f.	CDC No. 3, Character 2	R6	b0-b6
g.	Answer-Back 1, Character 1 (R1)	R7	b0-b6
h.	Answer-Back 1, Character 2 (R2)	R8	b0-b6
i.	Answer-Back 2 (R3)	R9	b0-b6
j.	Answer-Back 3 (R4)	R10	b0-b6
k.	Interrupt	R11	b0-b6
l.	Start of Heading/Start of Text 1	R12	b0-b6
m.	Start of Heading/Start of Text 2	R13	b0-b6
n.	End of Transmission (in addition to EOT or DLE EOT)	R14	b0-b6

REMINDER: LEAVE DIODES IN PLACE (▭) FOR SPACING OR 0 BITS. CUT AND REMOVE (⊠) DIODES FOR MARKING OR 1 BITS.

103.	Number of Characters in CDC No. 1	R15, b0	
a.	One Character CDC	▭	*
b.	Two Character CDC	⊠	

104.	Number of Characters in CDC No. 2	R15, b1	
a.	One Character CDC	▭	*
b.	Two Character CDC	⊠	

105.	Number of Characters in CDC No. 3	R15, b2	
a.	One Character CDC	▭	*
b.	Two Character CDC	⊠	

106.	DELETE Must Follow CDC No. 1	R15, b3	
a.	No	▭	*
b.	Yes	⊠	

107.	DELETE Must Follow CDC No. 2	R15, b4	
a.	No	▭	*
b.	Yes	⊠	

108.	DELETE Must Follow CDC No. 3	R15, b5	
a.	No	▭	*
b.	Yes	⊠	

109.	Answer-Back Generated for CDC No. 2	R15, b6	
a.	Answer-Back to CDC No. 2	▭	*
b.	No Answer-Back to CDC No. 2	⊠	

110.	Answer-Back Generated for No. 3	R15, b7	
a.	Answer-Back to CDC No. 3	▭	*
b.	No Answer-Back to CDC No. 3	⊠	

▭ Diode left in.
⊠ Diode cut and removed.
* Factory installed.

B. SET AND STATION IDENTIFICATION (Cont)

4. OPTIONS FOR INTEGRATED CONTROLLER ROP (Cont)

410141 or 410734 Diode Matrix Circuit Card (Cont)

111.	Printer-Controlled Answer-Back	R16, b0	
a.	All Answer-Backs Delayed by Time of Option 118. (118.a. — No Delay, 118.b. — Approximately 180 Milliseconds)	▭	*
b.	Answer-Back 1 Delayed Until Printer Ready to Accept a Character or by Time of Option 118. (Whichever is Longer), Answer-Backs 2 and 3 Delayed by Time of Option 118. (If Printer is Not Ready to Accept a Character After 2 Seconds, Answer-Back 2 is Sent.)	⊠	

112.	Form Feed On Deselect	R16, b1	
a.	No Form Feed on Deselect	▭	*
b.	FF Character Sent to Printer on Deselect	⊠	

113.	Loss of Ability to Receive Causes Deselect	R16, b2	
a.	Loss of Ability to Receive Does Not Cause Deselect	▭	*
b.	Loss of Ability to Receive Causes Deselect	⊠	

114.	Line Break on Loss of DTR	R16, b3	
a.	Loss of DTR Does Not Cause Line Break	▭	*
b.	Loss of DTR Does Cause Line Break	⊠	

115.	Line Break on Vertical Parity Error	R16, b4	
a.	Vertical Parity Error Does Not Cause Line Break	▭	*
b.	Vertical Parity Error Does Cause Line Break	⊠	

116.	Copy Before STX (As Selected by Options 102.l. and m.)	R16, b5	
a.	Copy After STX	▭	*
b.	Copy After Receiving Valid CDC if Ready to Receive (Before STX)	⊠	

117.	Number of Characters in Answer-Backs	R16, b6	
a.	Answer-Backs Consist of 1 Character	▭	*
b.	Answer-Backs Consist of 2 Characters	⊠	

118.	Answer-Back Response Delay	R16, b7	
a.	No Delay After Clear to Send (CB) ON From Data Set	▭	*
b.	Fixed Delay of Approximately 180 Milliseconds	⊠	

▭ Diode left in.
⊠ Diode cut and removed.
* Factory installed.

119.	Variable Characters for Switched Network Answer-Back	Diode Assignment		
		Row	Column ASCII	Column Baudot
a.	Answer-Back Character 1	R1	b0-b6	b0-b4
b.	Answer-Back Character 2	R2	b0-b6	b0-b4
c.	Answer-Back Character 3	R3	b0-b6	b0-b4
d.	Answer-Back Character 4	R4	b0-b6	b0-b4
e.	Answer-Back Character 5	R5	b0-b6	b0-b4
f.	Answer-Back Character 6	R6	b0-b6	b0-b4
g.	Answer-Back Character 7	R7	b0-b6	b0-b4
h.	Answer-Back Character 8	R8	b0-b6	b0-b4
i.	Answer-Back Character 9	R9	b0-b6	b0-b4
j.	Answer-Back Character 10	R10	b0-b6	b0-b4
k.	Answer-Back Character 11	R11	b0-b6	b0-b4
l.	Answer-Back Character 12	R12	b0-b6	b0-b4
m.	Answer-Back Character 13	R13	b0-b6	b0-b4
n.	Answer-Back Character 14	R14	b0-b6	b0-b4
o.	Answer-Back Character 15	R15	b0-b6	b0-b4
p.	Answer-Back Character 16	R16	b0-b6	b0-b4

120.	Number of Characters in Switched Network Answer-Back	Cut and Remove Diode
a.	1	R1, b7
b.	2	R2, b7
c.	3	R3, b7
d.	4	R4, b7
e.	5	R5, b7
f.	6	R6, b7
g.	7	R7, b7
h.	8	R8, b7
i.	9	R9, b7
j.	10	R10, b7
k.	11	R11, b7
l.	12	R12, b7
m.	13	R13, b7
n.	14	R14, b7
o.	15	R15, b7
p.	16	R16, b7

121.	Left Margin Setting	R17, b1 to R18, b7
a.	Left Margin at Column 1	▭ *
b.	Left Margin at Column 2 or Beyond	⊠

▭ Diode left in.
⊠ Diode cut and removed.
* Factory installed.

B. SET AND STATION IDENTIFICATION (Cont)

4. OPTIONS FOR INTEGRATED CONTROLLER ROP (Cont)

410141 or 410734 Diode Matrix Circuit Card (Cont)

122.	Horizontal Tabulation Settings	R17, b1 to R33, b3	
a.	No Horizontal Tab Settings	▭ (ALL)	*
b.	Preselected Horizontal Tab Settings in Any Column 2 Through 80 (80-Column Printer) or 2 Through 132 (132-Column Printer)	⊠	

123.	Vertical Tabulation Settings	R34, b1 to R42, b7	
a.	No Vertical Tab Settings (See Note)	▭ (ALL)	*
b.	Preprogrammed Vertical Tab Settings for Any Line 2 Through 72 Lines (See Note)	⊠	

NOTE: Diode R34, b0 is NOT cut for Option 123.a. or b.

124.	Receipt of ENQ Starts Switched Network Answer-Back/ Multipoint Private Line Diagnostic Test	R43, b0	
a.	ENQ Does Not Start Answer-Back/Test	▭	*
b.	ENQ Starts Answer-Back/Test	⊠	

125.	Type of Printer Used	R43, b1
a.	80-Column Printer	▭
b.	132-Column Printer	⊠

NOTE: Option 125. is not applicable to the 40C303AD Controller.

126.	Pulse or Tone Generated on Receipt of BEL	R43, b2	
a.	Received BEL Character Does Not Cause Pulse or Tone	▭	*
b.	Received BEL Character (ASCII or — if Option 127.b., 138.b., or 139.b. is selected — Baudot or Teletypesetter Code No. 1 or No. 2) Causes 1-Second Pulse or Tone Generation	⊠	

127.	Baudot Code Converted to ASCII	R43, b3	
a.	Baudot Code Not Accepted	▭	*
b.	Baudot Code Converted to ASCII for Printer	⊠	

▭ Diode left in.
⊠ Diode cut and removed.
* Factory installed.

128.	Shift In/Shift Out (SI/SO) Detection	R43, b4	
a.	SI/SO Detection Not Used	▭	*
b.	SI/SO Detection Enables Printing Additional Characters	⊠	

129.	Horizontal Tabulation	R43, b5	
a.	HT Character Ignored by ROP	▭	*
b.	HT Character Causes Horizontal Tab as Selected in Option 122. or Set On-Line	⊠	

130.	Vertical Tabulation	R43, b6	
a.	VT Character Causes Line Feed	▭	*
b.	VT Character Causes Vertical Tab as Selected in Option 123. or Set On-Line	⊠	

131.	Left Margin	R43, b7	
a.	Left Margin Begins at Column 1 Regardless of Selection of Options 121. and 122.	▭	*
b.	Left Margin Begins as Selected in Option 121.	⊠	

132.	Printing of Escape Sequences Suppressed	R44, b0	
a.	Character After ESC Printed as Received	▭	*
b.	Printing of Character After ESC Suppressed	⊠	

133.	DLE EOT/EOT Disconnect	R44, b1	
a.	DLE EOT Sequence Causes Disconnect or Deselect (No Disconnect or Deselect on EOT Alone)	▭	*
b.	EOT Causes Disconnect or Deselect	⊠	

134.	On-Line Printer Control	R44, b2	
a.	DC2 and DC4 Ignored by ROP	▭	*
b.	DC4 Blinds Printer, DC2 Unblinds Printer	⊠	

135.	Idle Line Disconnect	R44, b3	
a.	No Disconnect on Idle Line	▭	*
b.	Disconnect After Idle Line of Approximately 30 Seconds	⊠	

▭ Diode left in.
⊠ Diode cut and removed.
* Factory installed.

B. SET AND STATION IDENTIFICATION (Cont)

4. OPTIONS FOR INTEGRATED CONTROLLER ROP (Cont)

410141 or 410734 Diode Matrix Circuit Card (Cont)

136.	Normal/Inverted SI/SO	R44, b4	
a.	Normal (SI = ASCII)	▭	*
b.	Inverted (SO = ASCII)	⊠	

137.	Carrier Fail Disconnect	R44, b5	
a.	No Disconnect on Carrier Fail	▭	*
b.	Disconnect After No Carrier for Approximately 15 Seconds	⊠	

138.	Teletypesetter Code No. 1 Converted to ASCII	R44, b6	
a.	Teletypesetter Code No. 1 Not Accepted	▭	*
b.	Teletypesetter Code No. 1 Converted to ASCII for Printer	⊠	

139.	Teletypesetter Code No. 2 Converted to ASCII	R44, b7	
a.	Teletypesetter Code No. 2 Not Accepted	▭	*
b.	Teletypesetter Code No. 2 Converted to ASCII for Printer	⊠	

140.	Interface to Transmission Facilities	R45, b0	
a.	EIA	▭	*
b.	20/60 mA	⊠	

141.	Data Link Control Procedures	R45, b1	
a.	Switched Network and Point-to-Point Private Line Applications	▭	*
b.	Multipoint Private Line Applications	⊠	

142.	Automatic Answer Starts Switched Network Answer-Back	R45, b2	
a.	Auto Answer Does Not Start Answer-Back	▭	*
b.	Auto Answer Starts Answer-Back	⊠	

▭ Diode left in.
⊠ Diode cut and removed.
* Factory installed.

143.	Reverse Channel Used/Not Used	R45, b3	
a.	Reverse Channel Not Used — Minimum 400 Milliseconds of Line Break Generated to Stop Sender	▭	*
b.	Reverse Channel Send and Receive (SCA and SCF) Used — SCA Turned OFF to Stop Sender, SCF ON Required to Send Answer-Back	⊠	

144.	Monitor Receive Data on Data Carrier Detect (CF) or Data Set Ready (CC)	R45, b4	
a.	Monitor Receive Data on Recognition of CC and CF ON	▭	*
b.	Monitor Receive Data on Recognition of CC ON	⊠	

145.	Local Copy of Switched Network Answer-Back	R45, b5	
a.	No Local Copy of Answer-Back	▭	*
b.	Local Copy of Answer-Back	⊠	

146.	Friction Feed/Tractor Feed Printer	R45, b6	
a.	Friction Feed Printer — Paper Alarm Causes AB 2 to be Sent on Next CDC or Data Terminal Ready (CD) OFF on New Call	▭	*
b.	Tractor Feed Printer — Paper Alarm Causes Immediate Disconnect	⊠	

147.	Buffer Fully Enabled/Minimum Usage of Buffer	R45, b7	
a.	Buffer Fully Enabled — Data Flow to Printer Controlled by Printer Request-Next-Character Signal to Avoid Data Stacking	▭	*
b.	Minimum Usage of Buffer — Data Sent to Printer at Approximately Same Rate as Received	⊠	

148.	Motor Turn-Off Delay	R46, b0	
a.	Minimum Delay — Motor Turns Off Approximately 30 Seconds After Detection of Idle Line	▭	*
b.	Maximum Delay — Motor Turn Off Delayed Approximately 2 Minutes After Detection of Idle Line	⊠	

▭ Diode left in.
⊠ Diode cut and removed.
* Factory installed.

B. SET AND STATION IDENTIFICATION (Cont)

4. OPTIONS FOR INTEGRATED CONTROLLER ROP (Cont)

410141 or 410734 Diode Matrix Circuit Card (Cont)

149.	New Line Substitution on Carriage Return	R46, b1	
a.	Carriage Return Passed to Printer	▭	*
b.	New Line Substituted for Carriage Return	⊠	

150.	DATA ERROR Lamp Used/Not Used	R46, b2	
a.	DATA ERROR Lamp Lit on Parity Error	▭	*
b.	DATA ERROR Lamp Not Used to Indicate Parity Errors	⊠	

151.	Switched Network/Private Line Applications	R46, b3	
a.	Switched Network Applications — Data Set Ready (CC) ON Turns on Motor	▭	*
b.	Private Line Applications — Character in Buffer Turns on Motor	⊠	

152.	Errored Character/Substitute Character to Printer on Parity Error	R46, b4	
a.	Errored Character Sent to Printer (See Note)	▭	*
b.	Substitute Character, (type carrier symbol on Monocase without foldover or ~ on Up-Low Printers without foldover) Sent to Printer on Parity Error	⊠	

153.	Future Use	R46, b5	
a.	All Present Applications	▭	*
b.	Possible Future Use	⊠	

154.	Future Use	R46, b6	
a.	All Present Applications	▭	*
b.	Possible Future Use	⊠	

155.	Future Use	R46, b7	
a.	All Present Applications	▭	*
b.	Possible Future Use	⊠	

▭ Diode left in.
⊠ Diode cut and removed.
* Factory installed.

156.	Number of Data Bits Per Character (Excluding Parity Bit, if Used)	S 2	S 3	
a.	5 Bits Per Character (Baudot Code)	●	●	
b.	6 Bits Per Character (Teletypesetter Code)	○	●	
c.	7 Bits Per Character (ASCII Code With Parity)	●	○	*
d.	8 Bits Per Character (ASCII Code Without Parity)	○	○	

157.	Number of Stop Bits Per Character	S 4	
a.	1 Stop Bit	●	*
b.	2 Stop Bits	○	

158.	Parity Used	S 1	S 5	
a.	Odd Parity Used	●	●	
b.	Even Parity Used	○	●	*
c.	No Parity Check or Parity Bit Used	—	○	

NOTE: Options 156., 157., and 158. are not used with the 40C303AD Controller.

● Indicates dot end of rocker switch depressed, toggle or slide positioned to ON.
○ Indicates blank end of rocker switch depressed, toggle or slide positioned to OFF.
— Position of switch does not affect option.
* Factory installed.

191.	Line Wraparound Operation	R43, b1
a.	Line Wraparound Performed by Printer	▭
b.	Line Wraparound Performed by Controller	▭✕

▭ Diode left in.
▭✕ Diode cut and removed.
* Factory installed.

B. SET AND STATION IDENTIFICATION (Cont)

4. OPTIONS FOR INTEGRATED CONTROLLER ROP (Cont)

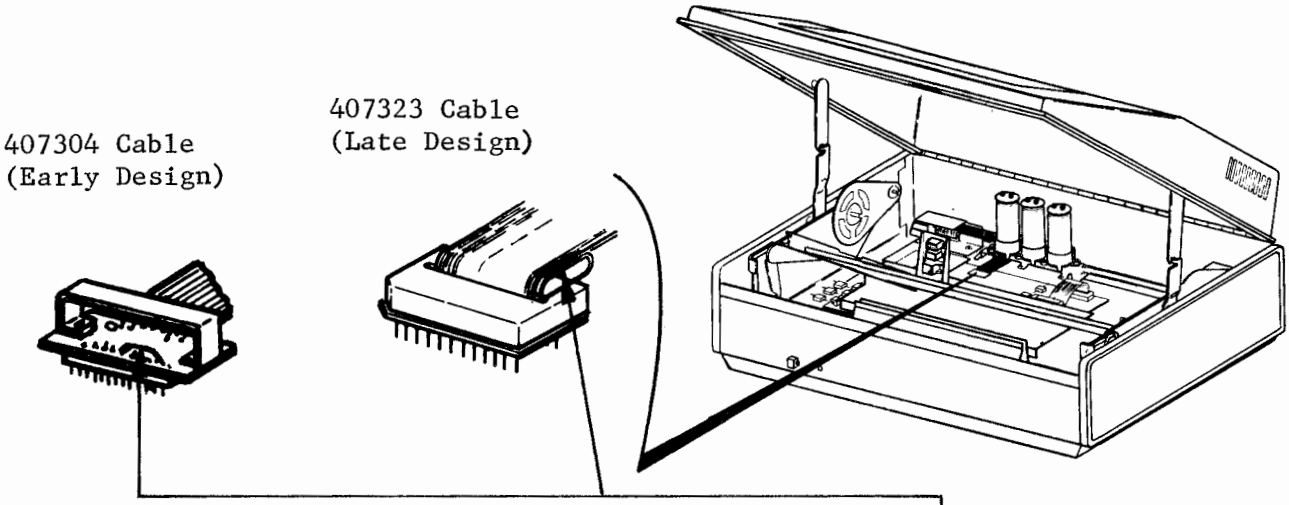

	Ground Connection	Action Required
a.	Frame Ground Connected to Signal Ground in Cabinet at P4	None *
b.	Frame Ground Not Connected to Signal Ground in Cabinet at P4	Cut Land at P4 or Lead

NOTE 1: Ground connection for the 40C303AA/001 Controller. Not used on Controller 40C303AD.

NOTE 2: Where a longer than normal 408065 cable for connecting ROP and data set is used, and when electrical noise is a problem, the frame ground to signal ground connection may be broken at the ROP (Option b.) or in the data set. DO NOT break the ground connection at BOTH places as proper operation of the internal test message will be affected.

Integrated Controller ROP Synchronous Controller 40C303AC/003

NOTE: To activate controller options and for associated option notes refer to Part 7 of this manual.

410734 Diode Matrix Circuit Card

121.	Left Margin Setting	R1, b0 to R2, b7
a.	Left Margin at Column 1	▭ All
b.	Left Margin at Column 2 or Beyond	☒

▭ Diode left in.
☒ Diode cut and removed.
* Factory installed.

122.	Horizontal Tabulation Settings	R1, b0 to R17, b3
a.	No Horizontal Tab Settings	(ALL)
b.	Preselected Horizontal Tab Settings in Any Column Through 80 (80-Column Printer) or Through 132 (132-Column Printer)	

123.	Vertical Tab Settings	R18, b0 to R29, b7
a.	No Vertical Tab Settings	(ALL)
c.	1st Vertical Tab Line	R18
d.	2nd Vertical Tab Line	R19
e.	3rd Vertical Tab Line	R20
f.	4th Vertical Tab Line	R21
g.	5th Vertical Tab Line	R22
h.	6th Vertical Tab Line	R23
i.	7th Vertical Tab Line	R24
j.	8th Vertical Tab Line	R25
k.	9th Vertical Tab Line	R26
l.	10th Vertical Tab Line	R27
m.	11th Vertical Tab Line	R28
n.	12th Vertical Tab Line	R29

NOTE: Refer to Part 7 of this manual when selecting vertical tab settings.

124. Not Present on 40C303AC/003 Controller

125.	Type of Printer Used	R46, b6
a.	80-Column Printer	
b.	132-Column Printer	

NOTE: Option 125. will be factory installed to match the printer used.

126.-130. Not Present

131.	Left Margin	R46, b4
a.	Left Margin Begins at Column 1 Regardless of Selection of Options 121. and 122.	*
b.	Left Margin Begins as Selected in Option 121.	

Diode left in.
Diode cut and removed.
* Factory installed.

B. SET AND STATION IDENTIFICATION (Cont)

4. OPTIONS FOR INTEGRATED CONTROLLER ROP (Cont)

410734 Diode Matrix Circuit Card (Cont)

132.-147. Not Present

148.	Motor Turn-Off Delay	R46, b5	
a.	Minimum Delay — Motor Turns Off Approximately 30 Seconds After Buffer Empties	▭	*
b.	Maximum Delay — Motor Turn Off Delayed Approximately 3 Minutes After Buffer Empties	⊠	

149.-158. Not Present

159.	Variable Characters for System Operation	DIODE ASSIGNMENT		
			COLUMN	
		ROW	ASCII	EBCDIC
a.	Programmable Character 1	R43	b0-b6	b0-b7
b.	Programmable Character 2	R42	b0-b6	b0-b7
c.	Programmable Character 3	R41	b0-b6	b0-b7
d.	Programmable Character 4	R40	b0-b6	b0-b7
e.	Programmable Character 5	R39	b0-b6	b0-b7
f.	Programmable Character 6	R38	b0-b6	b0-b7
g.	Programmable Character 7	R37	b0-b6	b0-b7
h.	Programmable Character 8 (DLE)	R36	b0-b6	b0-b7
i.	Programmable Character 9 (ZERO)	R35	b0-b6	b0-b7
j.	Programmable Character 10 (ONE)	R34	b0-b6	b0-b7
k.	Programmable Character 11 (EOT)	R33	b0-b6	b0-b7
l.	Programmable Character 12 (NAK)	R32	b0-b6	b0-b7
m.	Programmable Character 13 (ENQ)	R31	b0-b6	b0-b7
n.	Programmable Character 14	R30	b0-b6	b0-b7

160.	Communication Code-Line Operation	R46, b0	
a.	ASCII	▭	*
b.	EBCDIC	⊠	

161.	Future Use	R46, b1	
a.	All Present Applications	▭	*
b.	Possible Future Use	⊠	

162.	Type Font Length	R46, b2	
a.	64 or 96 Characters	▭	*
b.	48 Characters	⊠	

▭ Diode left in.
⊠ Diode cut and removed.
* Factory installed.

163.	Future Use	R46, b3	
a.	All Present Applications	▭	*
b.	Possible Future Use	⊠	

164.	Block Size	R45, b0	R45, b1	
a.	128 Characters	▭	⊠	
b.	256 Characters	⊠	▭	
c.	512 Characters	▭	▭	*

165.	Future Use	R45, b2	
a.	All Present Applications	▭	*
b.	Possible Future Use	⊠	

166.	Data Carrier Disconnect	R45, b3	
a.	Disconnect if Carrier is Lost for 30 Seconds or No Carrier Within 30 Seconds After Call Connection	▭	*
b.	No Disconnect on Absence of Carrier	⊠	

167.	Permanent Request-to-Send (RTS)	R45, b4	
a.	RTS ON Only When Required For Transmission	▭	*
b.	RTS ON at All Times That DTR is ON	⊠	

168.	Future Use	R45, b5
a.	All Present Applications	▭
b.	Possible Future Use	⊠

169.	Future Use	R45, b6
a.	All Present Applications	▭
b.	Possible Future Use	⊠

170.	Space Extension	R45, b7
a.	Single Space on Space Character	▭
b.	Three Spaces on Space Characters	⊠

171.	Selection Formats (PAD and SYN Characters Omitted)	R44, b0-b7
a.	Point-to-Point Private Line/Switched-Network Without Terminal Identification Providing Device Selection — E S D N [ ] T C Q X n	⊠ b0
b.	Point-to-Point Private Line/Switched-Network Without Terminal Identification or Device Selection — E S N [ ] T Q X	⊠ b1
c.	Multipoint Private Line Providing Device Selection — ∝ # E S N [ ] T Q X	⊠ b2

▭ Diode left in.
⊠ Diode cut and removed.
* Factory installed.

B. SET AND STATION IDENTIFICATION (Cont)

4. OPTIONS FOR INTEGRATED CONTROLLER ROP (Cont)

410734 Diode Matrix Circuit Card (Cont)

171. Selection Formats (PAD and SYN Characters Omitted) (Cont)		
d.	Multipoint Private Line Without Device Selection — $\alpha_1 \alpha_2$ E N Q [ ] S T X	b3
e.	Switched-Network With Terminal Identification Providing Device Selection — $\alpha_A \alpha_B$ E N Q [ ] S T X' D C n	b4
f.	Switched-Network With Terminal Identification; Without Device Selection — $\alpha_A \alpha_B$ E N Q [ ] S T X	b5
g.	Multipoint Private Line With Device Selection — $\alpha_1 \alpha_2$ # E N Q [ ] S T X	b6
h.	Switched-Network Providing Device Selection and Security Identification — $\alpha_A \alpha_B$ A_1 B_1 C_1 E N Q [ ] S T X' D C n	b7

172.	Future Use	R46, b7	
a.	All Present Applications	▭	*
b.	Possible Future Use	⊠	

173.	ETB	R47, b0	
a.	Block Terminator	▭	*
b.	Block Terminator, Executes Printing a Line, Executes Vertical Tab ESC Sequence (or NL if None) or Terminates a Horizontal Tab Setting Sequence.	⊠	

174.	ETX	R47, b1	
a.	Block Terminator or Terminates Horizontal Tab Setting Sequence	▭	*
b.	Block Terminator, Terminates Horizontal Tab Sequence, Executes Printing a Line or Executes Vertical Tab ESC Sequence (or NL if None).	⊠	

▭ Diode left in.
⊠ Diode cut and removed.
* Factory installed.

175.	ITB	R47, b2	
a.	Intermediate Block Terminator	▭	*
b.	Block Terminator, Executes Printing a Line, Executes Vertical Tab ESC Sequence (or NL if None) or Terminates Horizontal Tab Setting Sequence.	⊠	

176.	LINE FEED/NEW LINE	R47, b3	
a.	Executes Printing a Line, Executes Vertical Tab ESC Sequence (or NL if None) or Terminates Horizontal Tab Setting Sequence.	▭	*
b.	SPACE Only	⊠	

177.	RS or IRS (EBCDIC)	R47, b4	
a.	Executes Printing a Line and Executes Vertical Tab ESC Sequence (or NL if None)	▭	*
b.	SPACE Only	⊠	

178.	Immediate WACK	R47, b5	
a.	Disabled	▭	*
b.	Enabled	⊠	

179.	WACK/BUFFER CONTROL	R48, b6	
a.	Enabled, Multiple Block Buffer	▭	*
b.	Disabled, Single Block Buffer	⊠	

180.	Future Use	R47, b7	
a.	All Present Applications	▭	*
b.	Possible Future Use	⊠	

181.	Future Use	R48, b0	
a.	All Present Applications	▭	*
b.	Possible Future Use	⊠	

182.	Future Use	R48, b1	
a.	All Present Applications	▭	*
b.	Possible Future Use	⊠	

183.	Future Use	R48, b2	
a.	All Present Applications	▭	*
b.	Possible Future Use	⊠	

184.	Future Use	R48, b3	
a.	All Present Applications	▭	*
b.	Possible Future Use	⊠	

▭ Diode left in.
⊠ Diode cut and removed.
* Factory installed.

B. SET AND STATION IDENTIFICATION (Cont)

4. OPTIONS FOR INTEGRATED CONTROLLER ROP (Cont)

410734 Diode Matrix Circuit Card (Cont)

185.	Future Use	R48, b4	
a.	All Present Applications	▭	*
b.	Possible Future Use	⊠	

186.	Future Use	R48, b5	
a.	All Present Applications	▭	*
b.	Possible Future Use	⊠	

187.	Future Use	R48, b6	
a.	All Present Applications	▭	*
b.	Possible Future Use	⊠	

188.	Future Use	R48, b7	
a.	All Present Applications	▭	*
b.	Possible Future Use	⊠	

▭ Diode left in.
⊠ Diode cut and removed.
* Factory installed.

		SW1				
189.	Receiver Clock Control	1	2	3	4	
a.	Rec Clock from Associated Data Set	—	—	O	●	*
b.	Rec Clock Generated Internally	—	—	●	O	

		SW1				
190.	Transmitter Clock Control	1	2	3	4	
a.	Trans Clock from Associated Data Set	O	●	—	—	*
b.	Trans Clock Generated Internally	●	O	—	—	

		CUT STRAP		
	Ground Connection	18	19	
a.	Frame Ground Connected to Signal Ground	NO	NO	*
b.	Frame Ground Not Connected to Signal Ground	YES	YES	

● Indicates dot end of rocker switch depressed, toggle or slide positioned to ON.
O Indicates blank end of rocker switch depressed, toggle or slide positioned to OFF.
— Position of switch does not affect option.
* Factory installed.

5. OPTIONS FOR 9140 STATION CONTROLLER

NOTE: All 9140 Station Controller options will be prefixed with the number 9. For option coding instructions, refer to Part 8 of this manual.

9-1.		Variable Characters	Coding Instructions	
	a.	Answer-Back Character 1		
	b.	Answer-Back Character 2		
	c.	Answer-Back Character 3 (Optional AB)		
	d.	Answer-Back Character 4 (Negative AB)		
	e.	Transmitter On (Recommend DC1)		Choose 1
	f.	Transmitter Off (Recommend EOT)		
	g.	Acknowledge (Recommend ACK)		
	h.	Interrupt Character		
	i.	Transmitter Start Code (TSC) Character 1		Choose 1
	j.	Transmitter Start Code (TSC) Character 2		
	k.	Call Directing Code (CDC) 1, Character 1		
	l.	Call Directing Code (CDC) 1, Character 2		
	m.	Call Directing Code (CDC) 2, Character 1		
	n.	Call Directing Code (CDC) 2, Character 2		
	o.	Call Directing Code (CDC) 3, Character 1		
	p.	Call Directing Code (CDC) 3, Character 2		
	q.	Substitute Character		

B. SET AND STATION IDENTIFICATION (Cont)

5. OPTIONS FOR 9140 STATION CONTROLLER (Cont)

9-2.		Number of Characters in TSC	Strap 52
	a.	Two Characters	○
	b.	Two Characters Followed by Delete	●

Choose 1

9-3.		Unit Code of Answer-Back Characters Sent	Strap 13
	a.	10-Unit Code	○
	b.	11-Unit Code	●

Choose 1

9-4.		Unit Code of Characters Sent	Strap 50
	a.	10-Unit Code	●
	b.	11-Unit Code	○

Choose 1

9-5.		Code Level of Characters Sent	Strap 30
	a.	8-Unit Code	●
	b.	7-Unit Code or Less	○

Choose 1

9-6.		HDX or FDX Stop Sending	Straps	
			14	53
	a.	Stop on "SENT" Interrupt and EOT, Requires Option 9-8.b.	○	○
	b.	No Stopping of Sender	○	●
	c.	Not Used in 40/3-Type Applications	—	—
	d.	Not Used in 40/3-Type Applications	—	—
	e.	Not Used in 40/3-Type Applications	—	—
	f.	Not Used in 40/3-Type Applications	—	—

Choose 1

(See Legend for ●, ○, –, and * on Page 10-58)

9-7.		Local Copy on ROP of KD Send Data (KD and ROP Arrangements)	Strap 15
	a.	Local Copy (Can be Used for KD and ROP)	O
	b.	No Local Copy (May be Overridden by Option 9-13.) (Choose for Other Arrangements or KD and ROP, if Desired)	●

Choose 1

9-8.		Regeneration of Sent Data (Requirements of Options 9-6.c. — 9-6.f. Override Option 9-8.) (See Option 9-6., Card D1.)	Strap 26
	a.	No Regeneration	O
	b.	Regeneration	●

Choose 1

9-9.		Interrupt Feature	Strap 34
	a.	Stop on Interrupt Character and Blind Receive Data, Start on STX.	●
	b.	Does Not Stop on Interrupt Character	O

Choose 1

9-10.		Function of EOT Sent by Terminal	Strap 51
	a.	EOT Deselects 9140 Sender	●
	b.	EOT Does Not Deselect Sender	O

Choose 1

(See Legend for ●, O, —, and * on Page 10-58)

B. SET AND STATION IDENTIFICATION (Cont)

5. OPTIONS FOR 9140 STATION CONTROLLER (Cont)

		9-11. Delay in Turning Off Carrier	Straps 69	70	71	72	
	a.	Retain Until Last Character Is Sent	●	●	○	●	Choose 1
	b.	Retain for One Character After Interrupt	●	○	●	○	
	c.	Retain for Three Characters After Interrupt	○	○	●	○	

		9-12. 1st or 2nd A/B Character Restarts Sender, or Sender Does Not Stop for A/B at All	Straps 58	59	60	
	a.	2nd Character (If Option 9-6.c., 9-6.d., 9-6.e., or 9-6.f. Must be Used) (See Option 9-6., Card D1)	○	●	○	Choose 1
	b.	1st Character (If Option 9-6.c., 9-6.d., 9-6.e., or 9-6.f. Is Used) or Does Not Stop (If Option 9-6.a. or 9-6.b. Is Used) (See Option 9-6., Card D1) Should Not be Used in 40/3-Type Applications.	●	○	●	

		9-13. Local ROP Copy of KD Send Data Provided/Not Provided by 9140	Straps 75	76	
	a.	Copy All Sent Data and CPU Responses	●	●	Choose 1
	b.	Copy Sent Data Only After STX is Sent	○	○	

		9-14. Number of Characters in CDC1 (Exclusive of Delete, if Used)	Straps 1	2	3	
	a.	One-Character CDC	●	○	●	Choose 1
	b.	Two-Character CDC	○	●	●	

		9-15. Number of Characters in CDC2 (Exclusive of Delete, if Used)	Straps 4	5	6	
	a.	One Character CDC	●	○	●	Choose 1
	b.	Two-Character CDC	○	●	●	
	c.	No CDC2	○	○	○	

(See Legend for ●, ○, –, and * on Page 10-58)

9-16.		Number of Characters in CDC3 (Exclusive of Delete, if Used)	Straps 10	Straps 11	
	a.	One Character CDC	●	○	Choose 1
	b.	Two Character CDC	○	●	
	c.	No CDC3	Remove Card A-1		

9-17.		Answer-Back Generated for CDCs	Straps 7	Straps 8	Straps 9	Straps 35	
	a.	Answer-Back to CDC1 (No Delete After CDC)	—	—	●	○	Choose 1
	b.	Answer-Back to CDC1 After Delete	—	—	●	●	
	c.	No Answer-Back to CDC1	—	—	○	—	
	d.	Answer-Back to CDC2 (No Delete After CDC)	●	—	—	○	Choose 1
	e.	Answer-Back to CDC2 After Delete	●	—	—	●	
	f.	No Answer-Back to CDC2	○	—	—	—	
	g.	Answer-Back to CDC3 (No Delete After CDC)	—	●	—	○	Choose 1
	h.	Answer-Back to CDC3 After Delete	—	●	—	●	
	i.	No Answer-Back to CDC3	—	○	—	—	

9-18.		Type of Answer-Back to TSC	Strap 20	
	a.	Same as Ready to Receive to a CDC Only When DTR is On	○	Choose 1
	b.	Same as Ready to Receive to a CDC (Independent of DTR)	●	

9-19.		Answer-Back to CDC (Observe That, for Example, Option 9-17.c. Can Override Option 9-19.a. or 19.b.) (See Option 9-17., Card C2.)	Straps 28	Straps 29	
	a.	Answer-Back CDC1 Always	○	—	Choose 1
	b.	Answer-Back to CDC1 Only When Ready to Receive	●	—	

(See Legend for ●, ○, —, and * on Page 10-58)

B. SET AND STATION IDENTIFICATION (Cont)

5. OPTIONS FOR 9140 STATION CONTROLLER (Cont)

9-19. (Cont)			Straps 28	Straps 29	
	c.	Answer-Back to CDC2 Always	—	○	Choose 1
	d.	Answer-Back to CDC2 Only When Ready to Receive	—	●	
	e.	Answer-Back to CDC3 Always	—	—	Choose 1
	f.	Answer-Back to CDC3 When Ready to Receive	—	—	

9-20.		Optional Answer-Back to CDC or TSC	Straps 73	Straps 74	
	a.	Optional Negative Answer-Back	●	○	Choose 1
	b.	Optional Positive Answer-Back (CDC Only)	○	●	
	c.	No Optional Answer-Back	○	○	
	d.	Optional Positive and Negative Answer-Back — Should Not be Used in 40/3-Type Applications.	●	●	

9-21.		Response Delay for Motor Start-Up	Strap 68	
	a.	Nominal 2-Second Delay	○	Choose 1
	b.	Nominal 200-Millisecond Delay	●	

9-22.		Received Vertical Parity Error Response	Strap 16	
	a.	Odd Parity Causes Line Break	●	Choose 1
	b.	Odd Parity Does Not Cause Line Break	○	

9-23.		Loss of DTR Response (Data Terminal Ready)	Strap 17	
	a.	Loss of DTR Causes Line Break	●	Choose 1
	b.	Loss of DTR Does Not Cause Line Break	○	

(See Legend for ●, ○, —, and * on Page 10-58)

9-24.		Type of F Card Used	Strap 61	
	a.	F1 Circuit Card — Without 9140 Substitute Character	●	Choose 1
	b.	F2 Circuit Card — With 9140 Substitute Character	○	

9-25.		9140 Recognition of SOH and ETX	Straps			
			64	65	66	
	a.	SOH Only	●	○	○	Choose 1
	b.	ETX Only (Action of ETX Requires Local Engineering)	○	●	○	
	c.	Both SOH and ETX	○	○	○	
	d.	Neither SOH or ETX	○	○	●	

9-26.		Data Set Interface	Straps		
			38	39	
	a.	Gate Data Set CTS With 9140 Signals (Recommended)	○	—	Choose 1
	b.	Do Not Gate Data Set CTS With 9140 Signals	●	—	Choose 1
	c.	Gate Data Set DSR With 9140 Signals (Recommended)	—	○	
	d.	Do Not Gate Data Set DSR With 9140 Signals	—	●	

9-27.		Alarm Time and Reset on STX or EOT	Straps			
			X	Y	Z	
	a.	30-Second Alarm (See Note below.)	—	○	○	Choose 1
	b.	60-Second Alarm (See Note below.)	—	●	○	
	c.	90-Second Alarm (See Note below.)	—	●	●	Choose 1
	d.	Initialize Optional A/B Circuit on STX or EOT	●	—	—	
	e.	Initialize Optional A/B Circuit on EOT	○	—	—	

NOTE: Audible Alarm on receipt of CDC if not ready to receive (DTR off).

(See Legend for ●, ○, —, and * on Page 10-58)

B. SET AND STATION IDENTIFICATION (Cont)

6. OPTIONS FOR SYNCHRONOUS STATION ARRANGEMENTS (40/4)

This section will include all options that are utilized in the Model 40/4 Station. It also covers handling of circuit cards, location of circuit card switch packs, and information on how to activate or change switch positions. Station controller option switches are enabled per the service order request and should be checked per the controller arrangement form included with each controller. This form is taped to the inside of each controller cover.

If a station worksheet is not included with the station, a worksheet can be prepared from the order. Example of an order: If a customer wishes to install one maxi-cluster at one location and one mini-cluster at a second location, the maxi-cluster will have associated with it one DCC, three KDs and one printer. The mini-cluster will have one KD.

Option 401. entries 00 and 06 provide the addresses for the customers polling and selection. Station number 00 corresponds to SPA of SP(space) and SSA of - (minus) in the sample worksheet shown. Although the following examples are shown with common name titles (for KD and printer), Teletype Corporation codes may be entered if desired. See Examples 1 and 2.

Examples of Worksheet Preparation

Example 1: Maxi-Cluster

Synchronous Model 40 Station Configuration Worksheet -- Station Cluster

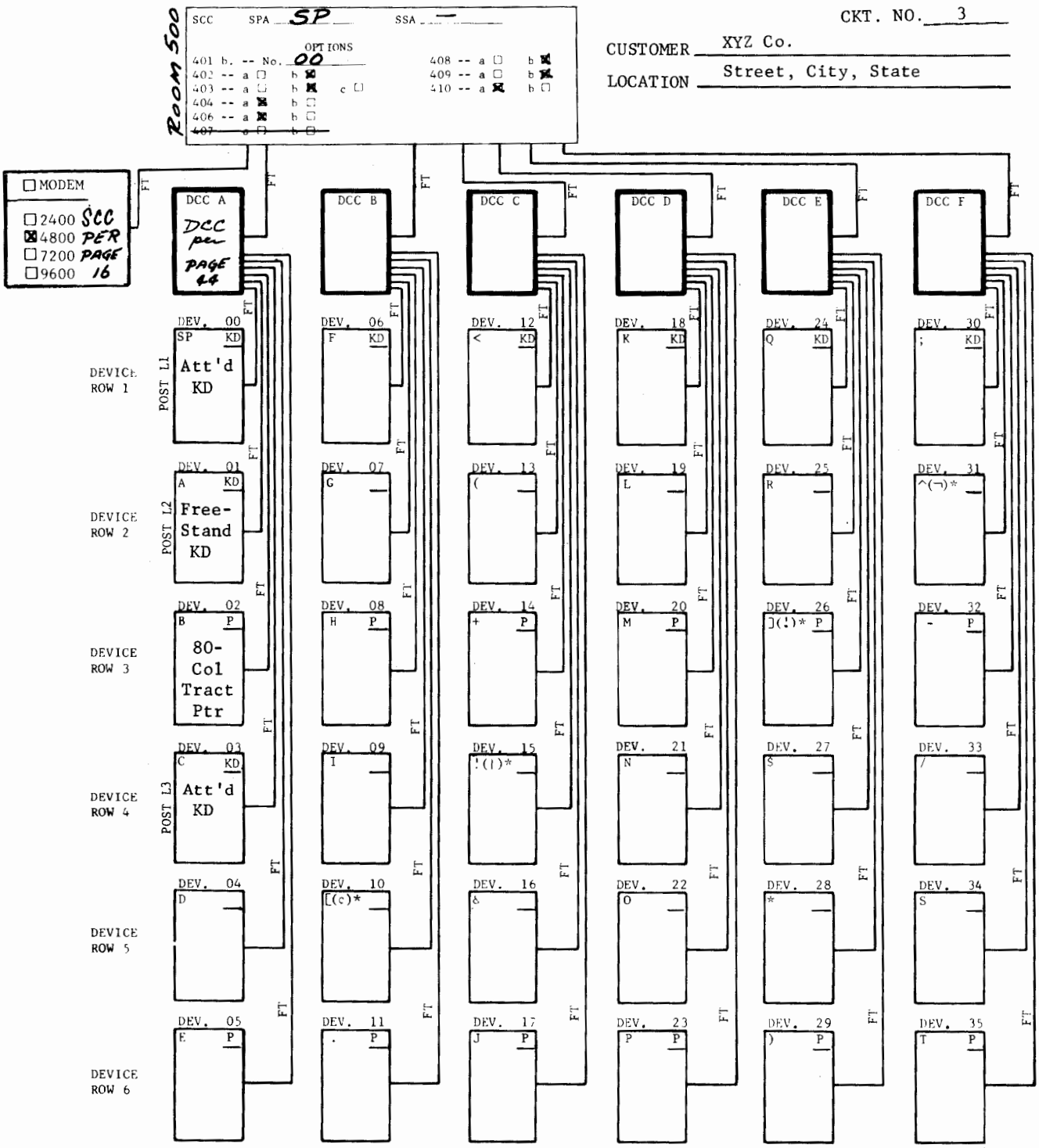

B. SET AND STATION IDENTIFICATION (Cont)

6. OPTIONS FOR SYNCHRONOUS STATION ARRANGEMENTS (40/4) (Cont)

Example 2: Mini-Cluster: In example 2, Option 407, was lined out because it did not apply to the order. Cable lengths (not distance between components) is entered.

Synchronous Model 40 Station Configuration Worksheet -- Mini-Cluster

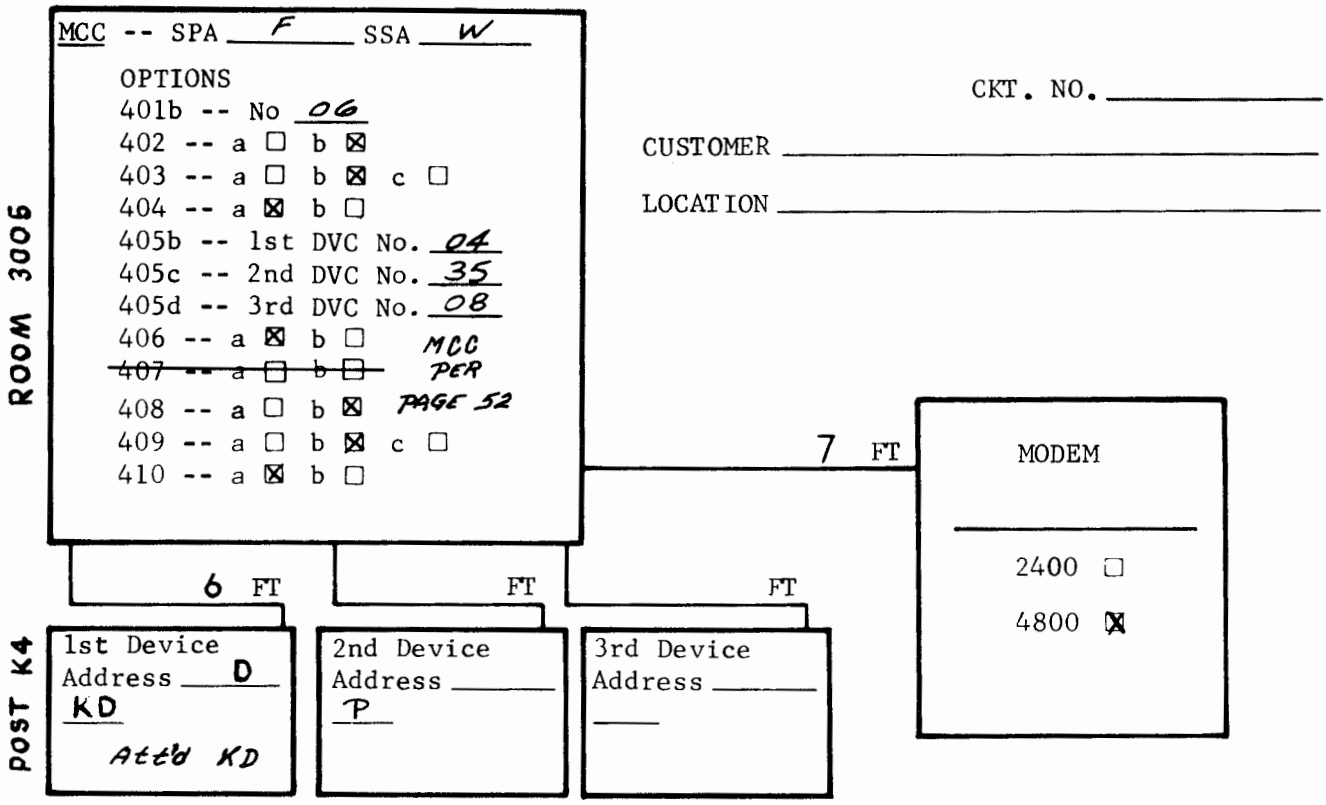

NOTE: 2nd Device is always a printer. 3rd Device is either KD or printer.

PRINTER OPTIONS			
PRINTER I/O SOCKET		S7	S8
Friction Feed			
Tractor Feed 80 Col			
Tractor Feed 132 Col			
17.	Specify Right Margin		
	Specify Left Margin		
18.a.	No Paper Feed Out		
18.b.	Paper FO on "RM" Loss		
18.c.	Paper FO on "RM" Loss and ETX		
19.d.	96 Character Set		
19.e.	64 Character Set		
19.f.	Ext. ASCII Set		
20.a.	Single LF		
20.b.	Double LF		
21.a.	Lower and Upper Case Print		
21.b.	Lower Case Prints as Upper Case		
22.a.	Lower Case Prints as Error		
22.b.	Lower Case Prints as Upper Case		
39.a.	Forms on		
39.b.	Forms off		
48.a.	Paper Out Not Gated W/FF		
48.b.	Paper Out Gated W/FF		

NOTE: Selected printer options must be entered on the Controller Arrangement Form located in the DCC or MCC to which printer is connected.

The worksheet examples included in this section provide the required information contained on the worksheets to be used during installation.

A Station Configuration Worksheet should be included as part of every Model 40/4 Station; however, if the worksheet is not included with the station, fill in the blank samples that follow by using the information included on the order.

Sample Worksheets

Synchronous Model 40 Station Configuration Worksheet -- Maxi-Cluster

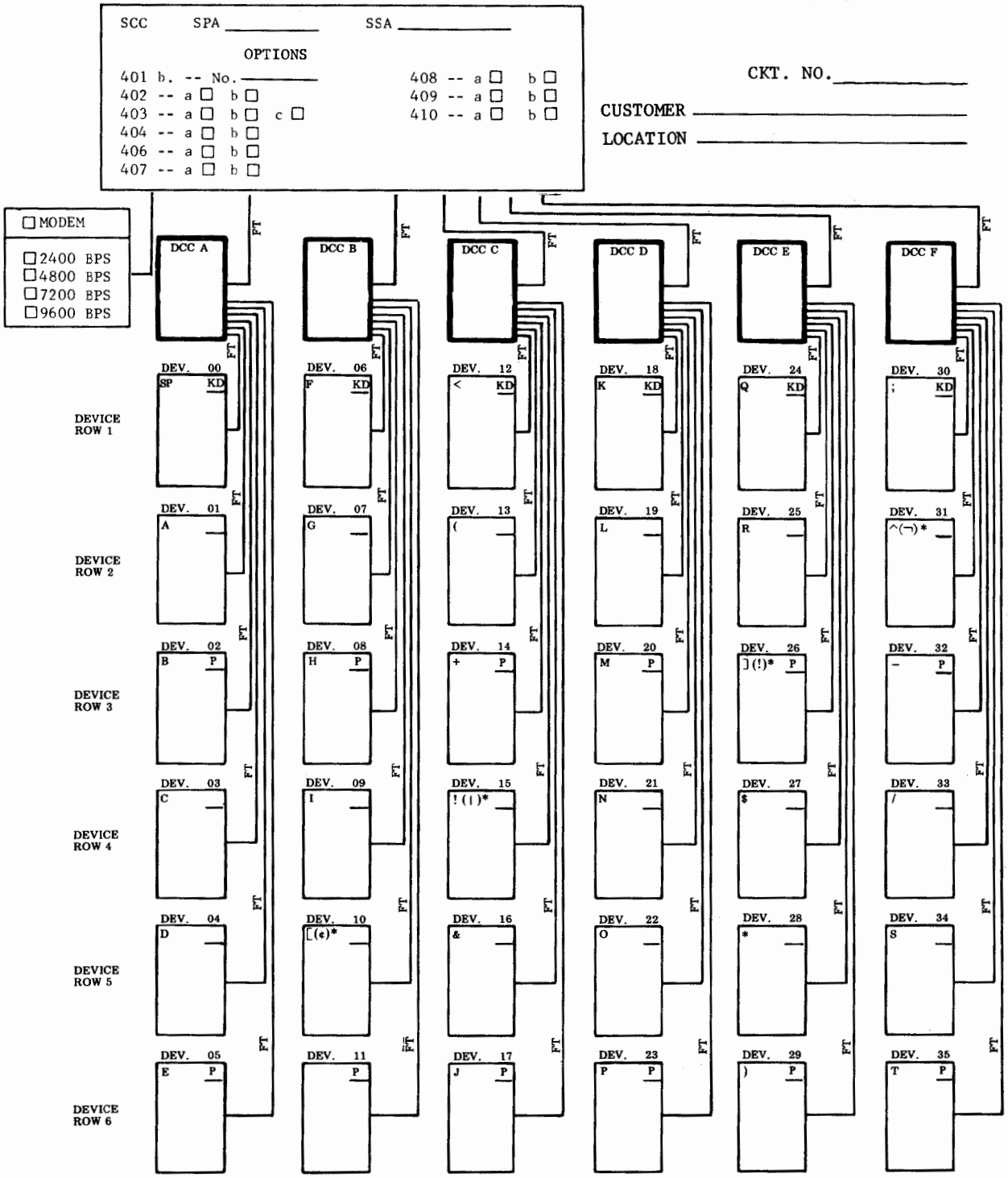

*Characters in parentheses are EBCDIC.

B. SET AND STATION IDENTIFICATION (Cont)

6. OPTIONS FOR SYNCHRONOUS STATION ARRANGEMENTS (40/4) (Cont)

Synchronous Model 40/4 Station Configuration Worksheet -- Mini-Cluster

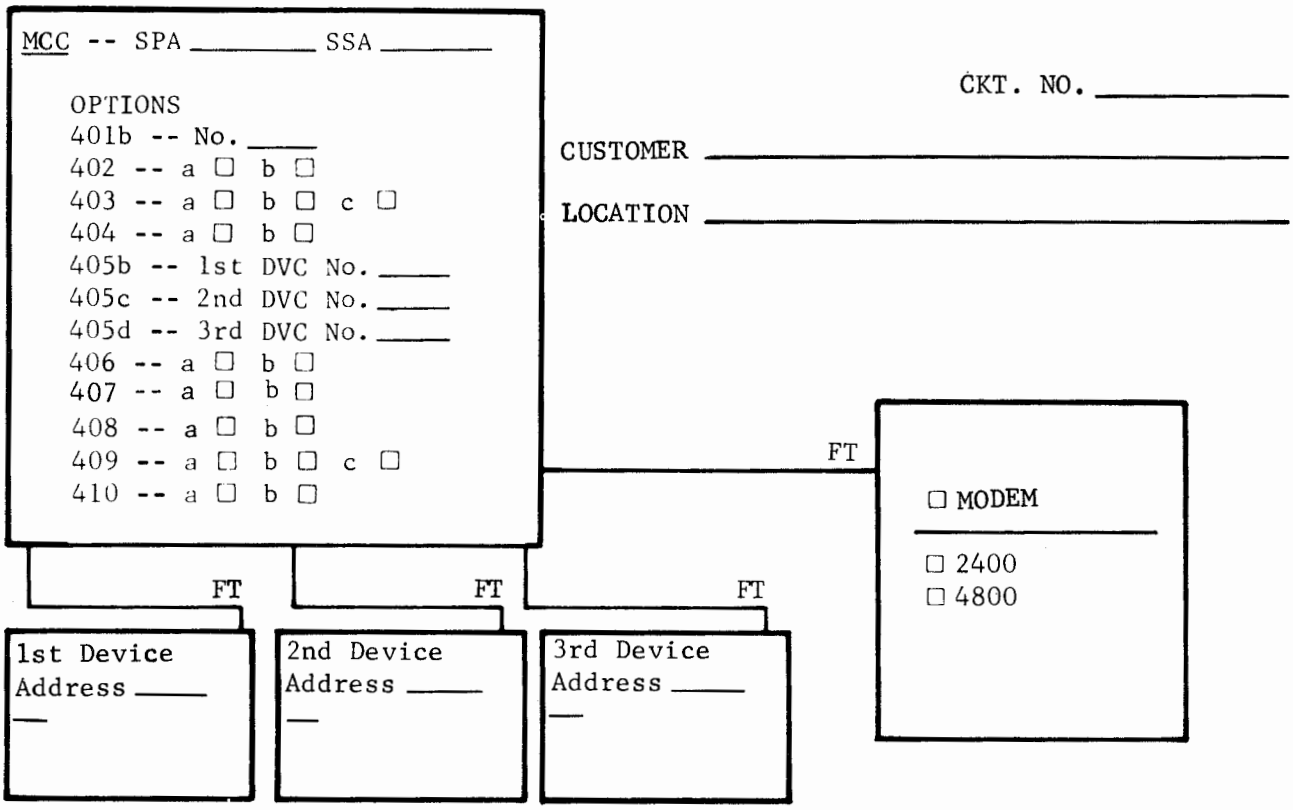

NOTE: 2nd Device is always a printer. 3rd Device is either KD or printer.

The following cautions are to be used as safety measures for the apparatus and the craftsperson.

CAUTION 1: TURN OFF ALL THE POWER AND SIGNAL SOURCES BEFORE REMOVING OR REPLACING ANY COMPONENT.

Attach static ground strap tightly to wrist.

Attach clip end of static discharge strap to frame ground.

CAUTION 2: TO AVOID POSSIBLE INTERNAL DAMAGE TO CIRCUITRY, WEAR A 346392 STATIC DISCHARGE STRAP CONNECTED TO GROUND TO ALLOW STATIC DISCHARGE BEFORE HANDLING CIRCUIT CARDS FOR REMOVAL OR REPLACEMENT. AVOID TOUCHING CIRCUIT LANDS OR COMPONENTS AS MUCH AS POSSIBLE.

CAUTION 3: PLACE LISTED CARD IN AN RM150592 STATIC BAG IMMEDIATELY AFTER REMOVAL FROM UNIT. DO NOT PLACE ANY PRINTER PAPER IN THE BAG WITH THE CARD. KEEP THE CARD IN THE STATIC BAG AT ALL TIMES. NEVER HANDLE THE CARD OUTSIDE THE BAG WITHOUT WEARING A PROPERLY GROUNDED 346392 STATIC GROUND STRAP.

Cards List

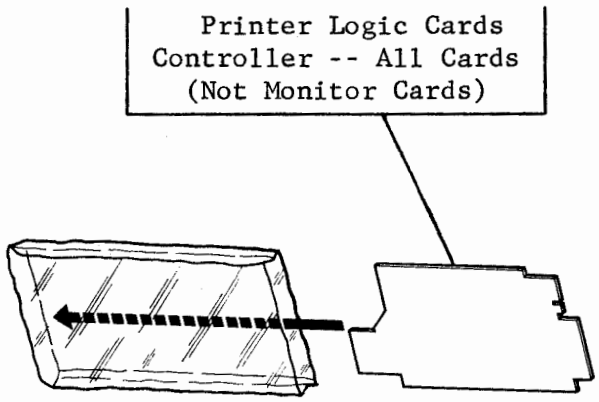

B. SET AND STATION IDENTIFICATION (Cont)

6. OPTIONS FOR SYNCHRONOUS STATION ARRANGEMENTS (40/4) (Cont)

If any field options are to be changed, turn off power and remove cards using the following procedures. Check card to see that pins are not bent before reinserting.

Extracting Circuit Cards From Controller

a. Lift up on the extractor handles of the circuit card.

b. Lift circuit card straight up.

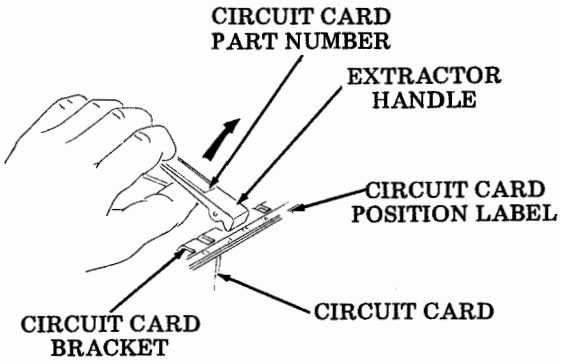

Locating Switch Packs on Circuit Cards

Example: SP A 15

NOTE: "1" is always at the top, and "ON" is always to the left.

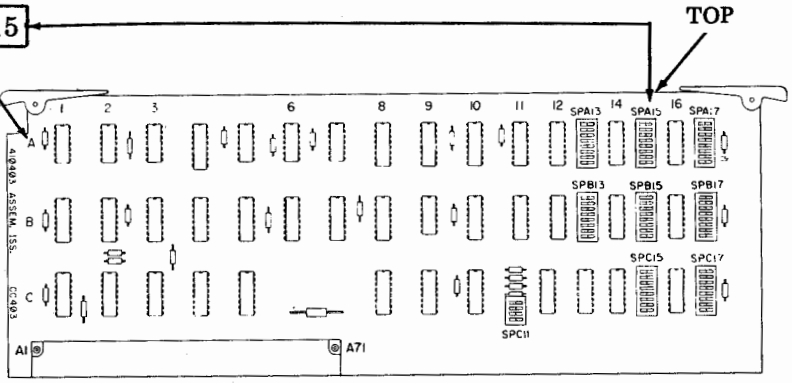

Activating Options or Changing Switch Positions

Switch OFF = ○ (Depress right side or throw to right)
Switch ON = ● (Depress left side or throw to left)

ROCKER-TYPE SWITCH
(Press to operate.)

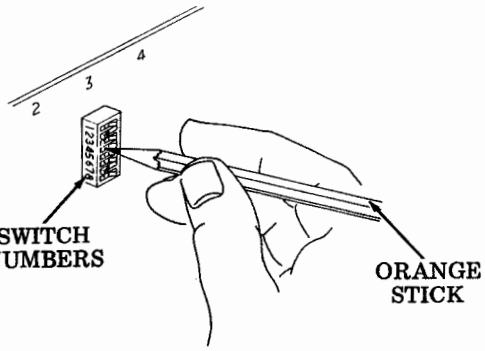

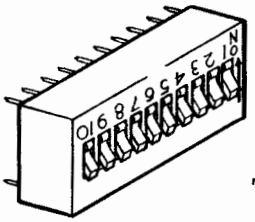

TOGGLE-TYPE SWITCH
(Throw to operate.)

NOTE: All station controller options will be prefixed with the number 40 to indicate 40/4 Station Controller options.

Controller Option 401. -- Station Poll and Select Addresses

Option 401. is determined by the station number entered in the SCC or MCC portion of the Station Configuration Worksheet.

401 — Station Poll and Select Address		410403 (SPA15,17) 410411 (SPB1,2)
a.	None (Does Not Provide Proper Operation)	(See Tables A and B for ASCII and Tables C and D for EBCDIC.)
b.	Station Number (Specify a Station Number From 00 to 31)	

Example 1: Station Number = "04", Line Code = ASCII

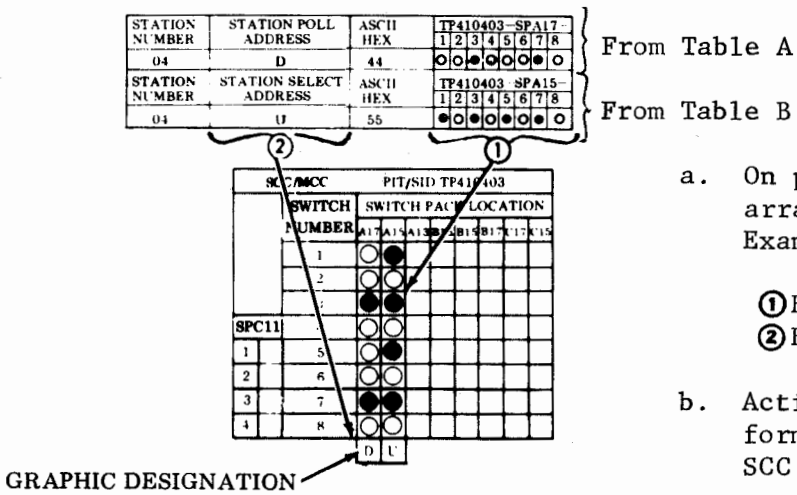

a. On portions of controller arrangement forms shown in Examples 1 and 2.

① Enter switch selections.
② Enter graphic designations.

b. Activate switches (as entered on form) on 410403 circuit card in SCC or MCC.

Example 2: Station Number = "02", Line Code = EBCDIC

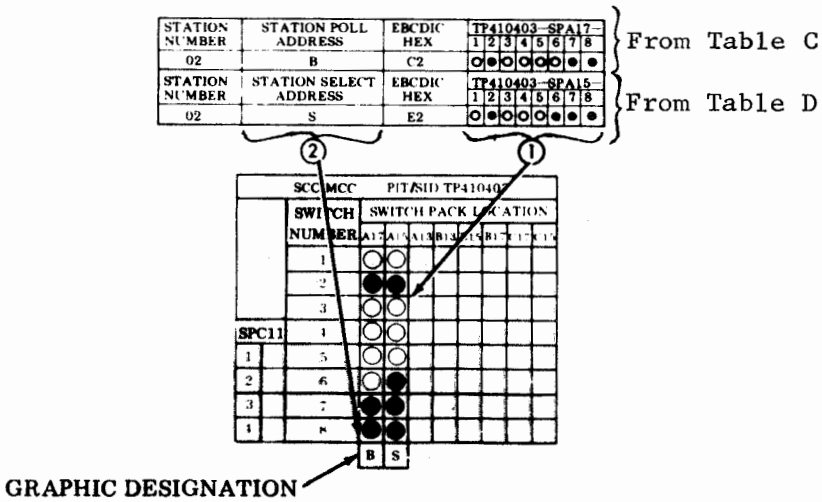

Switch ON ●
Switch OFF ○

B. SET AND STATION IDENTIFICATION (Cont)

6. OPTIONS FOR SYNCHRONOUS STATION ARRANGEMENTS (40/4) (Cont)

TABLE A

ASCII

STATION POLL ADDRESS

STATION NUMBER	STATION POLL ADDRESS CHARACTER	HEX	410403–SPA17– 1	2	3	4	5	6	7	8
00	SPACE	20	○	○	○	○	○	●	○	○
01	A	C1	●	○	○	○	○	○	●	○
02	B	C2	○	●	○	○	○	○	●	○
03	C	43	●	●	○	○	○	○	●	○
04	D	C4	○	○	●	○	○	○	●	○
05	E	45	●	○	●	○	○	○	●	○
06	F	46	○	●	●	○	○	○	●	○
07	G	C7	●	●	●	○	○	○	●	○
08	H	C8	○	○	○	●	○	○	●	○
09	I	49	●	○	○	●	○	○	●	○
10	[	5B	●	●	○	●	●	○	●	○
11	. (PERIOD)	AE	○	●	●	●	○	●	○	○
12	<	BC	○	○	●	●	●	●	○	○
13	(	A8	○	○	○	●	○	●	○	○
14	+	AB	●	●	○	●	○	●	○	○
15	!	A1	●	○	○	○	○	●	○	○
16	&	26	○	●	●	○	○	●	○	○
17	J	4A	○	●	○	●	○	○	●	○
18	K	CB	●	●	○	●	○	○	●	○
19	L	4C	○	○	●	●	○	○	●	○
20	M	CD	●	○	●	●	○	○	●	○
21	N	CE	○	●	●	●	○	○	●	○
22	O	4F	●	●	●	●	○	○	●	○
23	P	D0	○	○	○	○	●	○	●	○
24	Q	51	●	○	○	○	●	○	●	○
25	R	52	○	●	○	○	●	○	●	○
26	]	5D	●	○	●	●	●	○	●	○
27	$	44	○	○	●	○	○	●	○	○
28	*	2A	○	●	○	●	○	●	○	○
29	)	29	●	○	○	●	○	●	○	○
30	;	3B	●	●	○	●	●	●	○	○
31	^	5E	○	●	●	●	●	○	●	○

[redacted]

NOTE: The "HEX" addresses shown above do not necessarily relate to the setting of the switches.

TABLE B

ASCII

STATION SELECT ADDRESS

STATION NUMBER	STATION SELECT ADDRESS		410403—SPA15—							
	CHARACTER	HEX	1	2	3	4	5	6	7	8
00	- (MINUS)	AD	●	○	●	●	○	●	○	○
01	/	2F	●	●	●	●	○	●	○	○
02	S	D3	●	●	○	○	●	○	●	○
03	T	54	○	○	●	○	●	○	●	○
04	U	D5	●	○	●	○	●	○	●	○
05	V	D6	○	●	●	○	●	○	●	○
06	W	57	●	●	●	○	●	○	●	○
07	X	58	○	○	○	●	●	○	●	○
08	Y	D9	●	○	○	●	●	○	●	○
09	Z	DA	○	●	○	●	●	○	●	○
10	| (VERTICAL LINE)	7C	○	○	●	●	●	●	●	○
11	, (COMMA)	2C	○	○	●	●	○	●	○	○
12	?	25	●	○	●	○	○	●	○	○
13	_ (UNDERSCORE)	DF	●	●	●	●	●	○	●	○
14	>	3E	○	●	●	●	●	●	○	○
15	?	BF	●	●	●	●	●	●	○	○
16	0 (ZERO)	B0	○	○	○	○	●	●	○	○
17	1 (ONE)	31	●	○	○	○	●	●	○	○
18	2	32	○	●	○	○	●	●	○	○
19	3	B3	●	●	○	○	●	●	○	○
20	4	34	○	○	●	○	●	●	○	○
21	5	B5	●	○	●	○	●	●	○	○
22	6	B6	○	●	●	○	●	●	○	○
23	7	37	●	●	●	○	●	●	○	○
24	8	38	○	○	○	●	●	●	○	○
25	9	B9	●	○	○	●	●	●	○	○
26	:	BA	○	●	○	●	●	●	○	○
27	#	23	●	●	○	○	○	●	○	○
28	@	40	○	○	○	○	○	○	●	○
29	'	A7	●	●	●	○	○	●	○	○
30	=	3D	●	○	●	●	●	●	○	○
31	"	A2	○	●	○	○	○	●	○	○

NOTE: The "HEX" addresses shown above do not necessarily relate to the setting of the switches.

B. SET AND STATION IDENTIFICATION (Cont)

6. OPTIONS FOR SYNCHRONOUS STATION ARRANGEMENTS (40/4) (Cont)

TABLE C

EBCDIC

OPTION 401.-- STATION POLL ADDRESS (SCC OR MCC)

STATION NUMBER	STATION POLL ADDRESS	EBCDIC HEX	410403—SPA17—							
			1	2	3	4	5	6	7	8
00	SPACE	40	○	○	○	○	○	○	●	○
01	A	C1	●	○	○	○	○	○	●	●
02	B	C2	○	●	○	○	○	○	●	●
03	C	C3	●	●	○	○	○	○	●	●
04	D	C4	○	○	●	○	○	○	●	●
05	E	C5	●	○	●	○	○	○	●	●
06	F	C6	○	●	●	○	○	○	●	●
07	G	C7	●	●	●	○	○	○	●	●
08	H	C8	○	○	○	●	○	○	●	●
09	I	C9	●	○	○	●	○	○	●	●
10	¢	4A	○	●	○	●	○	○	●	○
11	. (PERIOD)	4B	●	●	○	●	○	○	●	○
12	<	4C	○	○	●	●	○	○	●	○
13	(	4D	●	○	●	●	○	○	●	○
14	+	4E	○	●	●	●	○	○	●	○
15	| (VERTICAL BAR)	4F	●	●	●	●	○	○	●	○
16	&	50	○	○	○	○	●	○	●	○
17	J	D1	●	○	○	○	●	○	●	●
18	K	D2	○	●	○	○	●	○	●	●
19	L	D3	●	●	○	○	●	○	●	●
20	M	D4	○	○	●	○	●	○	●	●
21	N	D5	●	○	●	○	●	○	●	●
22	O	D6	○	●	●	○	●	○	●	●
23	P	D7	●	●	●	○	●	○	●	●
24	Q	D8	○	○	○	●	●	○	●	●
25	R	D9	●	○	○	●	●	○	●	●
26	!	5A	○	●	○	●	●	○	●	○
27	$	5B	●	●	○	●	●	○	●	○
28	*	5C	○	○	●	●	●	○	●	○
29	)	5D	●	○	●	●	●	○	●	○
30	:	5E	○	●	●	●	●	○	●	○
31	¬	5F	●	●	●	●	●	○	●	○

LEGEND: | is "logical OR" (see Station No. 15).
¬ is "logical NOT" (see Station No. 31).

TABLE D

EBCDIC

OPTION 401 -- STATION SELECT ADDRESS (SCC OR MCC)

STATION NUMBER	STATION SELECT ADDRESS	EBCDIC HEX	410403—SPA15—							
			1	2	3	4	5	6	7	8
00	- (MINUS)	60	○	○	○	○	○	●	●	○
01	/	61	●	○	○	○	○	●	●	○
02	S	E2	○	●	○	○	○	●	●	●
03	T	E3	●	●	○	○	○	●	●	●
04	U	E4	○	○	●	○	○	●	●	●
05	V	E5	●	○	●	○	○	●	●	●
06	W	E6	○	●	●	○	○	●	●	●
07	X	E7	●	●	●	○	○	●	●	●
08	Y	E8	○	○	○	●	○	●	●	●
09	Z	E9	●	○	○	●	○	●	●	●
10	¦ (VERTICAL LINE)	6A	○	●	○	●	○	●	●	○
11	, (COMMA)	6B	●	●	○	●	○	●	●	○
12	%	6C	○	○	●	●	○	●	●	○
13	— (UNDERSCORE)	6D	●	○	●	●	○	●	●	○
14	>	6E	○	●	●	●	○	●	●	○
15	?	6F	●	●	●	●	○	●	●	○
16	0(ZERO)	F0	○	○	○	○	●	●	●	●
17	1 (ONE)	F1	●	○	○	○	●	●	●	●
18	2	F2	○	●	○	○	●	●	●	●
19	3	F3	●	●	○	○	●	●	●	●
20	4	F4	○	○	●	○	●	●	●	●
21	5	F5	●	○	●	○	●	●	●	●
22	6	F6	○	●	●	○	●	●	●	●
23	7	F7	●	●	●	○	●	●	●	●
24	8	F8	○	○	○	●	●	●	●	●
25	9	F9	●	○	○	●	●	●	●	●
26	:	7A	○	●	○	●	●	●	●	○
27	#	7B	●	●	○	●	●	●	●	○
28	@	7C	○	○	●	●	●	●	●	○
29	`	7D	●	○	●	●	●	●	●	○
30	=	7E	○	●	●	●	●	●	●	○
31	"	7F	●	●	●	●	●	●	●	○

B. SET AND STATION IDENTIFICATION (Cont)

6. OPTIONS FOR SYNCHRONOUS STATION ARRANGEMENTS (40/4) (Cont)

Controller Options

Options 402. -- 410. are determined from the Service Order and Station Configuration Worksheet and apply to either ASCII or EBCDIC Stations. Either 410403 or 410411 will be present.

402 — Type of Alarm on Receipt of Alarm Write Control or Copy Control Character		410403 SPC17-1	410411 SPB7-1	
a.	Continuous — ("Local" Must be Depressed to Stop Alarm)	●	●	
b.	One Second (Alarm Sounds Only Once)	O	O	*

403 — Display Field Intensities		410403		410411		
		SPC17-2	SPC17-3	SPB7-2	SPB7-3	
a.	Intensified and Blink Fields are Intensified	O	O	O	O	*
b.	Intensified and Blink Fields are Blinked	●	O	●	O	
c.	Blink Fields are Blinked. Intensified Fields are Intensified. Mixed Intensified and Blinked Fields on the same Display are Blinked.	O	●	O	●	

404 — Type of Block Abort Procedure Used When Station Abnormally Stops Sending On-Line **		410403 SPC17-5	410411 SPB7-5	
a.	Terminate With ETX	O	O	
b.	Terminate With SUB ENQ and Prime Alarm Flag	●	●	*

405 — Device Addresses (MCC Only)		410403 SPB 13, 15, or 17	410411 SPB4,B5, or B6
a.	None (Does Not Provide Proper Operation)	(See Table E for ASCII and Table F for EBCDIC.)	As for 410403
b.	First Device (Specify Device No.)		
c.	Second Device (Specify Device No.)		
d.	Third Device (Specify Device No.)		

406 — Numeric Field Override (Applies to typewriter style opcons)		410403 SPC17-4	410411 SPB7-4	
a.	Alpha Data Can be Entered in Numeric Field	●	●	
b.	Alpha Data Cannot be Entered in Numeric Field	O	O	*

NOTE: In Option 406.a. or b.; when entering or trying to enter alpha data in numeric field, alarm will sound.

407 — Numeric Lock Special Feature (Applies to internal numeric cluster style opcons)		410403 SPC17-8	410411 SPB7-8	
a.	Enabled	●	●	
b.	Disabled	O	O	*

● = ON O = OFF

*Factory optioned.
**Install Option 404.b. unless otherwise specified.

408.	Line Code	(410408 present) 410403 SPC17-6	(410409 present) 410403 SPC17-6	(No 410408 or 410409) 410411 SPB7-6
a.	ASCII	●	N.A.	●
b.	EBCDIC	N.A.	O	O

409.	Up-Low/Monocase Font for KD	Type of D I/O Card Required in DCC or MCC	
		ASCII	EBCDIC
a.	Up-Low	410431	410435
b.	Monocase	410434	410436

NOTE: For printer type font, see Options 19.d. and 19.e.

410.	Typewriter/Internal Numeric Cluster Opcon	Cards Required			
		PROM Version		EPROM Version	
		DCC	MCC	DCC	MCC
a.	DCC or MCC Will Accept Typewriter Style Opcon (ASCII or EBCDIC)	410809 410911	410808 410909 410910	410509	410512 410513
b.	DCC or MCC Will Accept Internal Numeric Cluster Style Opcon (EBCDIC Only)	410810 410907	410812 410914 410915	410510	410514 410515

● Indicates on.
O Indicates off.
N.A. Indicates option is not available.

B. SET AND STATION IDENTIFICATION (Cont)

6. OPTIONS FOR SYNCHRONOUS STATION ARRANGEMENTS (40/4) (Cont)

TABLE E

ASCII

DEVICE ADDRESS

DEVICE NUMBER	DEVICE ADDRESS		410403 —SPB13, B15 or B17—							
	CHARACTER	HEX	1	2	3	4	5	6	7	8
00	SPACE	20	O	O	O	O	O	●	O	O
01	A	C1	●	O	O	O	O	O	●	O
02	B	C2	O	●	O	O	O	O	●	O
03	C	43	●	●	O	O	O	O	●	O
04	D	C4	O	O	●	O	O	O	●	O
05	E	45	●	O	●	O	O	O	●	O
06	F	46	O	●	●	O	O	O	●	O
07	G	C7	●	●	●	O	O	O	●	O
08	H	C8	O	O	O	●	O	O	●	O
09	I	49	●	O	O	●	O	O	●	O
10	[	5B	●	●	O	●	●	O	●	O
11	. (PERIOD)	AE	O	●	●	●	O	●	O	O
12	<	BC	O	O	●	●	●	●	O	O
13	(	A8	O	O	O	●	O	●	O	O
14	+	AB	●	●	O	●	O	●	O	O
15	!	A1	●	O	O	O	O	●	O	O
16	&	26	O	●	●	O	O	●	O	O
17	J	4A	O	●	O	●	O	O	●	O
18	K	CB	●	●	O	●	O	O	●	O
19	L	4C	O	O	●	●	O	O	●	O
20	M	CD	●	O	●	●	O	O	●	O
21	N	CE	O	●	●	●	O	O	●	O
22	O	4F	●	●	●	●	O	O	●	O
23	P	D0	O	O	O	O	●	O	●	O
24	Q	51	●	O	O	O	●	O	●	O
25	R	52	O	●	O	O	●	O	●	O
26	]	5D	●	O	●	●	●	O	●	O
27	$	44	O	O	●	O	O	●	O	O
28	*	2A	O	●	O	●	O	●	O	O
29	)	29	●	O	O	●	O	●	O	O
30	;	3B	●	●	O	●	●	●	O	O
31	^	5E	O	●	●	●	●	O	●	O
32	- (MINUS)	AD	●	O	●	●	O	●	O	O
33	/	2F	●	●	●	●	O	●	O	O
34	S	D3	●	●	O	O	●	O	●	O
35	T	54	O	O	●	O	●	O	●	O

[redacted]

NOTE: The "HEX" addresses shown above may not necessarily reflect the position of the switches.

TABLE F

EBCDIC

OPTION 405 -- DEVICE ADDRESS (MCC)

DEVICE NUMBER	DEVICE ADDRESS	EBCDIC HEX	410403 —SPB13, B15, or B17—							
			1	2	3	4	5	6	7	8
00	SPACE	40	O	O	O	O	O	O	●	O
01	A	C1	●	O	O	O	O	O	●	●
02	B	C2	O	●	O	O	O	O	●	●
03	C	C3	●	●	O	O	O	O	●	●
04	D	C4	O	O	●	O	O	O	●	●
05	E	C5	●	O	●	O	O	O	●	●
06	F	C6	O	●	●	O	O	O	●	●
07	G	C7	●	●	●	O	O	O	●	●
08	H	C8	O	O	O	●	O	O	●	●
09	I	C9	●	O	O	●	O	O	●	●
10	¢	4A	O	●	O	●	O	O	●	O
11	. (PERIOD)	4B	●	●	O	●	O	O	●	O
12	<	4C	O	O	●	●	O	O	●	O
13	(	4D	●	O	●	●	O	O	●	O
14	+	4E	O	●	●	●	O	O	●	O
15	| (VERTICAL BAR)	4F	●	●	●	●	O	O	●	O
16	&	50	O	O	O	O	●	O	●	O
17	J	D1	●	O	O	O	●	O	●	●
18	K	D2	O	●	O	O	●	O	●	●
19	L	D3	●	●	O	O	●	O	●	●
20	M	D4	O	O	●	O	●	O	●	●
21	N	D5	●	O	●	O	●	O	●	●
22	O	D6	O	●	●	O	●	O	●	●
23	P	D7	●	●	●	O	●	O	●	●
24	Q	D8	O	O	O	●	●	O	●	●
25	R	D9	●	O	O	●	●	O	●	●
26	!	5A	O	●	O	●	●	O	●	O
27	$	5B	●	●	O	●	●	O	●	O
28	*	5C	O	O	●	●	●	O	●	O
29	)	5D	●	O	●	●	●	O	●	O
30	;	5E	O	●	●	●	●	O	●	O
31	¬	5F	●	●	●	●	●	O	●	O
32	- (MINUS)	60	O	O	O	O	O	●	●	O
33	/	61	●	O	O	O	O	●	●	O
34	S	E2	O	●	O	O	O	●	●	●
35	T	E3	●	●	O	O	O	●	●	●

LEGEND: | is "logical OR" (see Station No. 15).
¬ is "logical NOT" (see Station No. 31).

B. SET AND STATION IDENTIFICATION (Cont)

6. OPTIONS FOR SYNCHRONOUS STATION ARRANGEMENTS (40/4) (Cont)

Blank Worksheet

40/4-Type Station Configuration Worksheet -- Single Display Station (SDS)

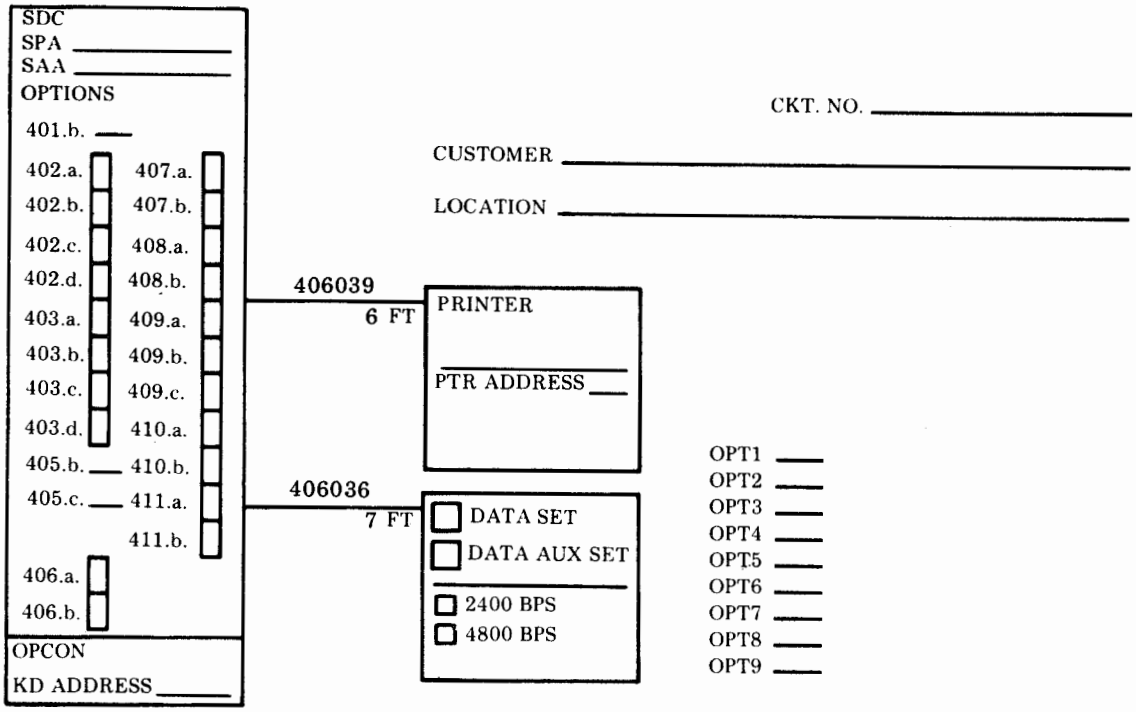

Example Worksheet

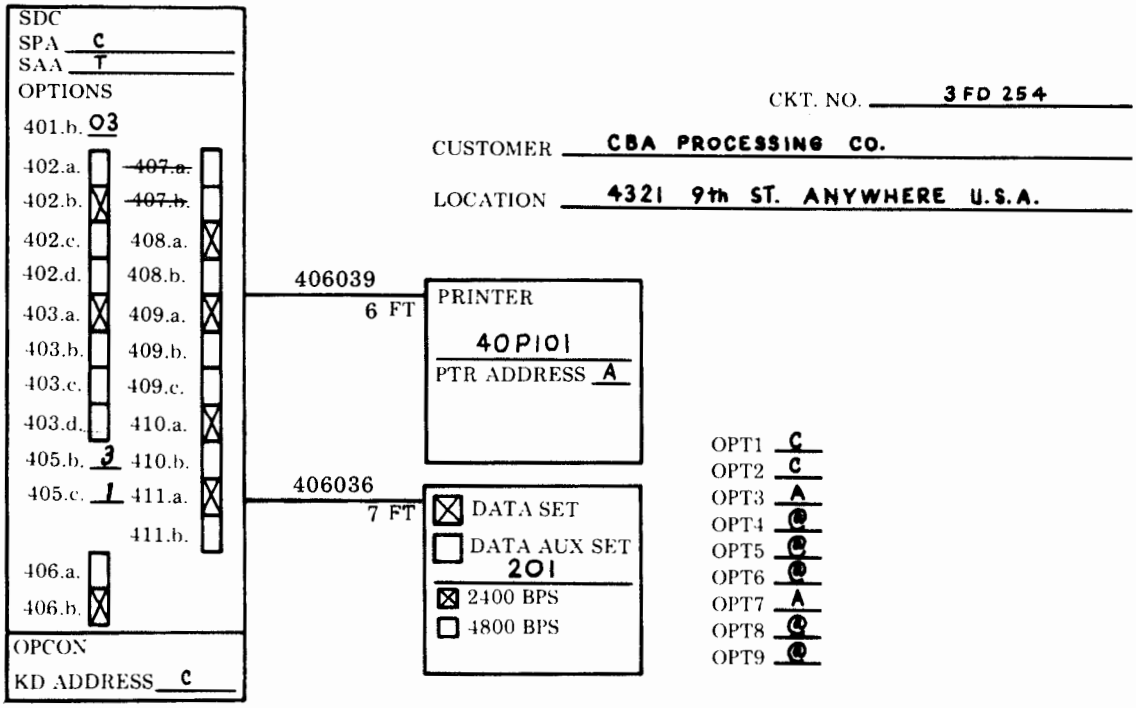

7. OPTIONS FOR SYNCHRONOUS SINGLE DISPLAY STATIONS (40/4)

Controller

All controller optioning is done from the opcon in the "OPT" mode by depressing appropriate keytops while an option listing is displayed on the monitor. All controller cards are left in place. To determine what options to enter in the controller, read the filled out Station Worksheet (and the following cross reference tables, if required) before attempting to enter the "OPT" mode.

NOTE: To insure the nickel-cadmium battery on the 410251 circuit card is fully charged, ac power must be applied to the controller for approximately 20 hours. The battery charge should be sufficient to hold the option selections without ac power being applied to the controller for several weeks.

TABLE G

OPTION CROSS REFERENCE

OPTION	CORRESPONDING DISPLAYED OPT
401.b.	OPT1 (followed by char.)
402.a.	OPT6 H
402.b.	OPT6 @
402.c.	OPT6 I
402.d.	OPT6A
403.a.	OPT5 @
403.b.	OPT5 A
403.c.	OPT5 B
403.d.	OPT5 D
404	(does not apply)
405.b.	OPT2 (followed by char.)
405.c.	OPT3 (followed by char.)
406.a.	OPT7 @
406.b.	OPT7 A
407.a.	OPT7 A
407.b.	OPT7 @

OPTION	CORRESPONDING DISPLAYED OPT
408.a.	OPT4 @ (or B)
408.b.	OPT4 A (or C or G)
409.a.	OPT4 @ (or A)
409.b.	OPT4 B (or C or G)
409.c.	(does not apply)
410.a.	OPT4 @ (or A, or B, or C)
410.b.	OPT4 G
411.a.	OPT8 @
411.b.	OPT8 A (do not use)
—	OPT9 @ (required)

TABLE H

OPTION CROSS REFERENCE

DISPLAYED OPT	CORRESPONDING OPTION
OPT1 (followed by char.)	401.b.
OPT2 (followed by char.)	405.b.
OPT3 (followed by char.)	405.c.
OPT4 @	408.a., 409.a., 410.a.
OPT4 A	408.b., 409.a., 410.a.
OPT4 B	408.a., 409.b., 410.a.
OPT4 C	408.b., 409.b., 410.a.
OPT4 G	408.b., 409.b., 410.b.

DISPLAYED OPT	CORRESPONDING OPTION
OPT5 @	403.a.
OPT5 A	403.b.
OPT5 B	403.c.
OPT5 D	403.d.
OPT6 H	402.a.
OPT6 @	402.b.
OPT6 I	402.c.
OPT6 A	402.d.
OPT7 @	406.a. or 407.b.
OPT7 A	406.b. or 407.a.
OPT8 @	411.a.
OPT8 A	411.b.
OPT9 @ (required)	–

B. SET AND STATION IDENTIFICATION (Cont)

7. OPTIONS FOR SYNCHRONOUS SINGLE DISPLAY STATIONS (40/4) (Cont)

To enter or change any option:

a. Turn on power to the station.
b. Check brightness control level (under monitor).
c. Tilt the monitor up.
d. Unlatch and open the cabinet cover.
e. Depress the Self-Test switch near the front of the 410251 circuit card for about three seconds.

NOTE: If the Self-Test switch is depressed for more than six seconds, the controller will enter the Self-Test mode. If this happens, make sure the switch is in the raised position to allow the controller to return to the Operating mode in about one minute.

The option listing is now displayed on the monitor. Each option (identified by "OPT1", etc) is followed by a graphic character which represents the presently selected option.

The cursor is over the OPT1 graphic character.

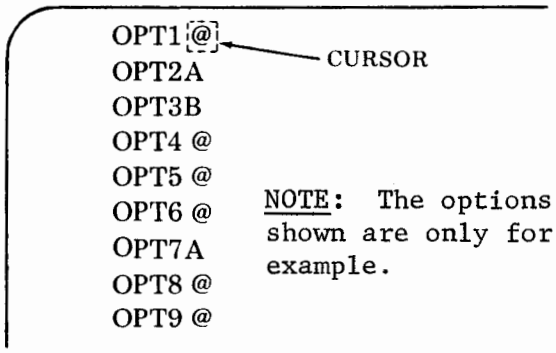

NOTE: Cursor movement to the graphic character for the next option is done by depressing the CURSOR TAB key. Thus, if only one option is to be changed, just use CURSOR TAB to position the cursor to the graphic character to be changed. There is a slight delay of cursor movement in this mode. If the cursor is below the character to be changed, CURSOR TAB will cause the cursor to wraparound (go from OPT9 back to OPT1).

OPT1: Refer to OPT1 List.

To enter the station poll and select address, find the desired station number or poll address in the OPT1 List. OPT1 corresponds to Option 401.b. Depress the corresponding key on the opcon. Check the OPT1 character column to assure that the proper character is now displayed.

OPT1 LIST

STATION NUMBER	DEPRESS/DISPLAY OPT1 CHARACTER			CORRESPONDING STATION	
				POLL ADDRESS	STATION SELECT ADDRESS
00	@			SPACE	- MINUS
01	A			A	/
02	B			B	S
03	C			C	T
04	D			D	U
05	E			E	V
06	F			F	W
07	G			G	X
08	H			H	Y
09	I			I	Z
10	J			[(¢)	¦ VERTICAL LINE
11	K			. PERIOD	, COMMA
12	L			<	%
13	M			(	_ UNDERSCORE
14	N			+	>
15	O			! (|)	?
16	P			&	0 ZERO
17	Q			J	1 ONE
18	R			K	2
19	S			L	3
20	T			M	4
21	U			N	5
22	V			O	6
23	W			P	7
24	X			Q	8
25	Y			R	9
26	Z			] (!)	:
		EBCDIC§			
	ASCII‡	DEPRESS	DISPLAY		
27	[	¬	¢	$	#
28	\	\	\	*	@
29	]	|	|	)	'
30	^	¢	¬	;	=
31	_	_	_	^(¬)	"

Characters in parentheses appear on EBCDIC opcons.
| is "logical OR" (see Station No. 15).
¬ is "logical NOT" (see Station No. 31).

‡ ASCII indicates American National Standard Code for Information Interchange.
§ EBCDIC indicates Extended Binary Coded Decimal Interchange Code.

B. SET AND STATION IDENTIFICATION (Cont)

7. OPTIONS FOR SYNCHRONOUS SINGLE DISPLAY STATIONS (40/4) (Cont)

Depress CURSOR TAB key. OPT2 corresponds to Option 405.b. Find the proper device number for the KD in the OPT1 and OPT3 List. Depress the corresponding key on the opcon. Check the OPT2 or OPT3 character column to assure the proper character is now displayed after OPT2.

Depress CURSOR TAB key. OPT3 corresponds to Option 405.c. If printer is part of the station, a printer device number is required. Use the OPT2 and OPT3 List. Depress the corresponding key for the device number. Check the OPT2 and OPT3 character column to assure the proper character is now displayed. If no printer is present, depress CURSOR TAB key.

NOTE: The printer device number must be different from the KD device number (example: 1 and 5, or 10 and 3 -- not 1 and 1).

OPT2 AND OPT3 LIST

Device Number	(Depress/Display) OPT2 or OPT3 Character	Corresponding Device Address
0	@	SPACE
1	A	A
2	B	B
3	C	C
4	D	D
5	E	E
6	F	F
7	G	G
8	H	H
9	I	I
10	J	[(¢)
11	K	PERIOD
12	L	<
13	M	(
14	N	+
15	O	! (¦)

Characters in parentheses appear on EBCDIC opcons.
¦ is "logic OR" (see Device No. 15).

Depress CURSOR TAB key. Choose the desired operation from the OPT4 list for type of opcon, display font and line code (408). Only one keytop is depressed to select all three options. Depress the required keytop on the opcon. Check the OPT4 character column to assure that the proper character is now displayed.

OPT4 LIST

Option 410. Opcon	Option 409. Display Font	Option 408. Line Code	(Depress/Display) OPT4 Character	
a. Typewriter	a. Up-Low	a. ASCII	@	
a. Typewriter	a. Up-Low	b. EBCDIC	A	
a. Typewriter	b. Monocase	a. ASCII	B	
a. Typewriter	b. Monocase	b. EBCDIC	C	¶
b. Data Entry	a. Up-Low	a. ASCII	D	††
b. Data Entry	a. Up-Low	b. EBCDIC	E	††
b. Data Entry	b. Monocase	a. ASCII	F	††
b. Data Entry	b. Monocase	b. EBCDIC	G	

¶ Factory optioned (for SDC, refers to selection that provides corresponding operation for a SCC/DCC or MCC).
†† Not an offering; do not choose OPT4D, OPT4E or OPT4F to provide service.

Depress CURSOR TAB key. Choose the proper character from the OPT5 List. Depress the required keytop on the opcon for the option selected. Check the OPT5 character column to assure that the proper character is now displayed.

OPT5 LIST

403.	Display Field Intensities	(Depress/Display) OPT5 Character
a.	Intensified and Blink Fields are Intensified	@ ¶
b.	Intensified and Blink Fields are Blinked	A
c.	Blink Fields are Blinked, Intensified Fields are Intensified. Mixed Intensified and Blinked Fields on the same Display are Blinked.	B
d.	Blink Special Intensified Fields All fields marked as intensified, protected and alpha-numeric will be blinked.	D

Depress CURSOR TAB key. Choose from OPT6 List and proceed as for OPT5.

OPT6 LIST

402.	Type of Alarm on Receipt of Alarm, Write Control, or Copy Control Character and Action Upon Opcon Entry of TAB	(Depress/Display) OPT6 Character
a.	Continuous Alarm TAB key erases field (inserts nulls) and moves cursor to first character of next unprotected field.	H
b.	Single Alarm TAB key erases field (inserts nulls) and moves cursor to first character of the next unprotected field.	@
c.	Continuous Alarm TAB key erases field (inserts nulls), no cursor movement.	I
d.	Single Alarm TAB key erases field (inserts nulls), no cursor movement.	A

NOTE: A continuous alarm causes the opcon bell to ring repeatedly. Alarm and TAB have been grouped into OPT6 for convenience. There is no relationship between TAB and alarm.

¶ Factory optioned (for SDC, refers to selection that provides corresponding operation for a SCC/DCC or MCC).

B. SET AND STATION IDENTIFICATION (Cont)

7. OPTIONS FOR SYNCHRONOUS SINGLE DISPLAY STATIONS (40/4) (Cont)

Depress CURSOR TAB key. The style of the opcon determines whether Option 406. or 407. applies. Use the OPT7 List and depress key required for the option selected. Check the OPT7 character column to assure that the proper character is now displayed.

OPT7 LIST

406.	Numeric Field Override (Used With Typewriter Style Opcon — 40K104)	(Depress/Display) OPT7 Character
a.	Alpha Data Can be Entered in Numeric Field (Bell Will Sound)	@
b.	Alpha Data Cannot be Entered in Numeric Field (Bell Will Sound)	A ¶

407.	Numeric Special Feature (Used With Data Entry Style Opcon — 40K105)	
a.	Enabled — Only Digits 0 to 9, Minus, DUP, Period Can be Entered Into a Numeric Field. (These are in the numeric cluster — see Note below.)	A
b.	Disabled — In a Numeric Field, Entry of Unshifted Characters Causes Unshifted Characters to be Displayed.	@ ¶

NOTE: In operation, the numeric lock special feature can be temporarily overridden by simultaneously depressing NUMERIC or ALPHA and a character key.

Depress CURSOR TAB key. Use OPT8 List. Depress required key. Check displayed character.

OPT8 LIST

411.	External Data Set Loopback Testing (See Caution Below.)	(Depress/Display) OPT8 Character
a.	External Data Set	@ ¶
b.	(Do not use)	A
c.	Loopback Testing Only (See PART 5 for testing procedures.)	C

CAUTION: OPTION 411.A. IS REQUIRED TO PROVIDE CUSTOMER OPERATION. OPTION 411.C. IS ONLY USED DURING INSTALLATION OR MAINTENANCE. OPERATION WITH OPTION 411.C. ON THE CUSTOMER DATA CHANNEL CAN CAUSE TRANSMISSION TO BE SCRAMBLED AND POSSIBLY HALT ALL SYSTEM OPERATION.

¶ Factory optioned (for SDC, refers to selection that provides corresponding operation for a SCC/DCC or MCC).

Depress CURSOR TAB key. Use the OPT9 List. Depress SPACE key. Check that the @ character is now displayed.

OPT 9 LIST

Reserved for Future Use	Depress Key	(Depress/Display) OPT9 Character
Proper Station Operation (required)	SPACE	@ ¶

¶Factory optioned (for SDC, refers to selection that provides corresponding operation for a SCC/DCC or MCC).

Option 404. is not used in a single display station because it does not apply. Option 404. is a type of block abort procedure used when station abnormally stops sending on-line.

Depress LOCAL or RESET key on opcon to exit the "OPT" mode. The controller will exit; go through a power-up routine, and begin normal operation. Lower and latch cabinet cover. Tilt monitor forward to the operating position.

412. Selection of Station Identification Sequence — Dial-Up Version	
a.	Specify Second Character of Four Character Sequence
b.	Specify Third Character of Four Character Sequence
c.	Specify Fourth Character of Four Character Sequence

NOTE: The SDS ID sequence consists of 4 characters. The first character is preset (when Option 408. -- ASCII or EBCDIC is chosen) to "F" when the ASCII code is chosen or "f" when the EBCDIC line code is chosen. The remaining 3 characters are chosen from the table and applied to Option 412.

TABLE I

SDS ID CHARACTERS							
SP	(	0	8	.@	H	P	X
!(|)	)	1	9	A	I	Q	Y
"	*	2	:	B	J	R	Z
#	+	3	;	C	K	S	[(¢)
$	,	4	<	D	L	T	\
%	-	5	=	E	M	U	](!)
&	.	6	>	F	N	V	^(¬)
'	/	7	?	G	O	W	—

NOTE: Where 2 characters are shown, ASCII is at left; EBCDIC at right.

B. SET AND STATION IDENTIFICATION (Cont)

7. OPTIONS FOR SYNCHRONOUS SINGLE DISPLAY STATIONS (40/4) (Cont)

413. Amount of time-out before automatic disconnect occurs. Specify time in minutes (1 to 15) (Dial-Up Version)	
a.	Disconnect Sequence DLE EOT
b.	No Subsequent Carrier Indication Received (15 second time-out).
c.	An Optional 1 to 15 Minutes Time-Out is Initiated Each Time the SDS Transmits a Valid Header. The Timer is Reset Each Time the SDS Receives Two Sync Characters From the Line.

414. Buffer Lock		SPB
a.	Buffer Lock Enabled	●
b.	Buffer Lock Disabled	O

● Indicates dot end of rocket switch depressed, toggle or slide positioned to ON.
O Indicates blank end of rocket switch depressed, toggle or slide positioned to OFF.

8. SET INTERFACE

The Model 40 Stations covered in this manual operate on-line with modems used in asynchronous and/or synchronous operation. The interface must conform to EIA (Electronic Industries Association) Standard RS-232-C. Charts 1, 2, and 3 provide EIA interface information for asynchronous (40/1, 2, 3) and synchronous (40/4) operation and PTI interface used in 40/0 operation.

The voltage levels on the EIA interface leads conform to those specified in RS-232-C. Maximum open-circuit voltage does not exceed 25 volts between any signal lead and signal ground or protective ground. Maximum short-circuit current between any two conductors does not exceed 0.5 A.

Marking level for data signal is designated as -5 V to -25 V and spacing level is +5 V to +25 V, with respect to signal ground. For control signals, the On level is designated as +5 V to +25 V, and the Off level is -5 V to -25 V. The -5 V to +5 V region is an undefined transition region. However, any level below +5 V is Marking or Off. Thus, a zero signal condition (including an open circuit or loss of power) results in a constant Marking or Off condition and prevents false indications.

CHART 1

ASYNCHRONOUS DATA SET INTERFACE

PIN NO.	EIA STANDARD DESIGNATION	LEAD
1	AA	Protective Ground
2	BA	Transmitted Data
3	BB	Received Data
4	CA	Request to Send
5	CD	Clear to Send
6	CC	Data Set Ready
7	AB	Signal Ground
8	CF	Received Line Signal Detector
11	NON-EIA	Secondary Request to Send
12	SCF	Secondary Received Line Signal Detector
20	CD	Data Terminal Ready
22	CE	Ring Indicator

Model 40/1, 40/2, and 40/3 Sets -- EIA Interface Connections

B. SET AND STATION IDENTIFICATION (Cont)

8. SET INTERFACE (Cont)

CHART 2

SYNCHRONOUS DATA SET INTERFACE

PIN NO.	EIA STANDARD DESIGNATION	LEAD	LEAD ORIGINATED BY BUSINESS MACHINE (BM) OR DATA SET (DS)	USED IN 40/4
1	AA	Frame Ground (FG)	Ground	Yes
2	BA	Send Data (SD)	BM (+) Space (-) Mark	Yes
3	BB	Receive Data (RD)	DS (+) Space (-) Mark	Yes
4	CA	Request to Send (RTS)	BM (+) ON (-) OFF	Yes
5	CB	Clear to Send (CTS)	DS (+) ON (-) OFF	Yes
6	CC	Data Set Ready (DSR)	DS (+) ON (-) OFF	Yes
7	AB	Signal Ground (SG)	Ground	Yes
8	CF	Carrier On (Delayed) (COD)	DS (+) ON (-) OFF	Yes
9	Reserved for Testing	CI9 (+12 V)	Not to be connected	
10	Reserved for Testing	CI10 (-12 V)	Not to be connected	
11*	Unassigned	Equalizer Mode (QM)	DS (+) ON (-) OFF	
14	SBA	New Sync (NS)	BM (+) Pulse (-) OFF	
15	DB	Serial Clock Transmitter (SCT)	DS Square Wave	Yes
16	SBB	Divided Clock Transmitter (DCT)	DS Square Wave	
17	DD	Serial Clock Receiver (SCR)	DS Square Wave	Yes
18	Unassigned	Divided Clock Receiver (DCR)	DS Square Wave	
19**		Remote Release (RR)	BM Closure	
20**	CD	Remote Control (RC) Data Terminal Ready	BM EIA (+)	Yes
21	CG	Signal Quality Detector (COV)	DS (+) ON (-) OFF	
22	CE	Ring Indicator (RI)	DS	Yes
24	DA	Serial Clock Transmitter External (SCTE)	BM Square Wave	
25*	Unassigned	CI25 (+5 V)	Not to be connected	

Model 40/4 Sets -- EIA Interface Connections

*Not on Data Set 201B or C
**Not on Data Set 208A

CHART 3

PARALLEL TERMINAL INTERFACE

PIN	ABBREVIATION	DESCRIPTION
1	RB1	Receive Bit 1
2	RB2	Receive Bit 2
3	RB3	Receive Bit 3
4	RB4	Receive Bit 4
5	RB5	Receive Bit 5
6	RB6	Receive Bit 6
7	RB7	Receive Bit 7
8	RB8	Receive Bit 8
9	RS	Receiver Selectable
10	RM	Receive Message
11	RR	Receiver Ready
12	RNC	Request Next Character
13	RCA	Receive Character Available
14	RDA	Receive Data Acknowledge
15	RDE	Receive Data Error
16	R12R	Receive Bits 1 and 2 Return
17	R34R	Receive Bits 3 and 4 Return
18	R56R	Receive Bits 5 and 6 Return
19	R78R	Receive Bits 7 and 8 Return
20	RSRR	Receiver Selectable Ready Return
21	RCAR	Receive Character Available Return
22	RNCR	Request Next Character Return
23	RMR	Receive Message Return
24	RAER	Receive Acknowledge and Error Return
25	-	Spare
26	SSRR	Sender Selectable and Ready Return
27	SCAR	Send Character Available
28	SMR	Send Message Return
29	PNCR	Present Next Character Return
30	TAER	Transmit Acknowledge, Error and Abort Return
31	SB1	Send Bit 1
32	SB2	Send Bit 2
33	SB3	Send Bit 3
34	SB4	Send Bit 4
35	SB5	Send Bit 5
36	SB6	Send Bit 6
37	SB7	Send Bit 7
38	SB8	Send Bit 8
39	SS	Sender Selectable
40	SM	Send Message
41	SR	Sender Ready
42	PNC	Present Next Character
43	SCA	Send Character Available
44	TDA	Transmit Data Acknowledge
45	TDE	Transmit Data Error
46	S12R	Send Bits 1 and 2 Return
47	S34R	Send Bits 3 and 4 Return
48	S56R	Send Bits 5 and 6 Return
49	S78R	Send Bits 7 and 8 Return
50	TA	Transmit Abort

B. SET AND STATION IDENTIFICATION (Cont)

8. SET INTERFACE (Cont)

The interface between the controller and KD or KDP operator console, and between the controller and printer, is a Teletype Corporation Standard Serial Interface (SSI). This is a special signaling system in which 18-bit "words" convey information to and from a device on two pairs of 2-conductor cables. In the KDP or ROP controller/printer interface, SSI control and data words are transferred from controller to printer, and SSI words defining the status of the printer are transferred from printer to controller. In the KD or KDP controller/operator console interface, SSI control words are transferred from controller to console, and SSI data and status words are transferred from console to controller.

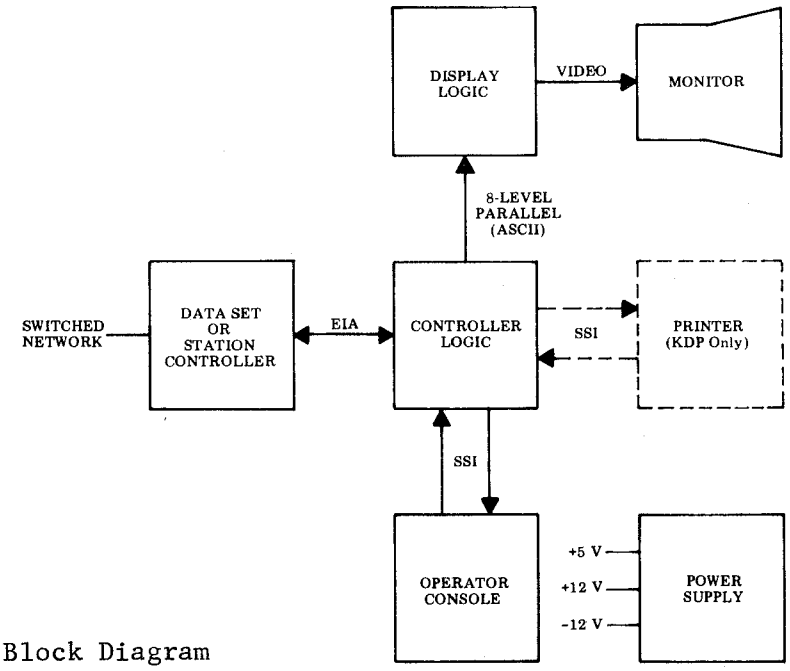

KD and KDP Block Diagram

In the RO printer, the signal interchange between operator console and controller is in the form of switch contact closures and indicator signal voltages.

The printers used with the integrated controller are identical to those previously furnished except for the addition of power supply components to the printer to provide additional voltages to drive the integrated controller.

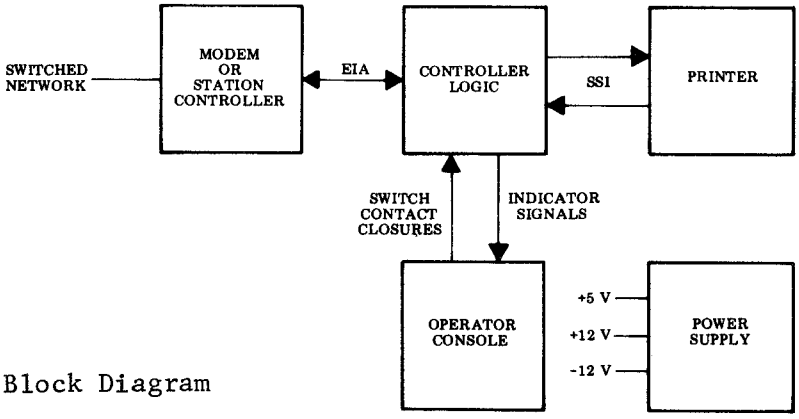

ROP Block Diagram

NOTE: The integrated controller does not have a separate power supply unit.

9. DIMENSIONS

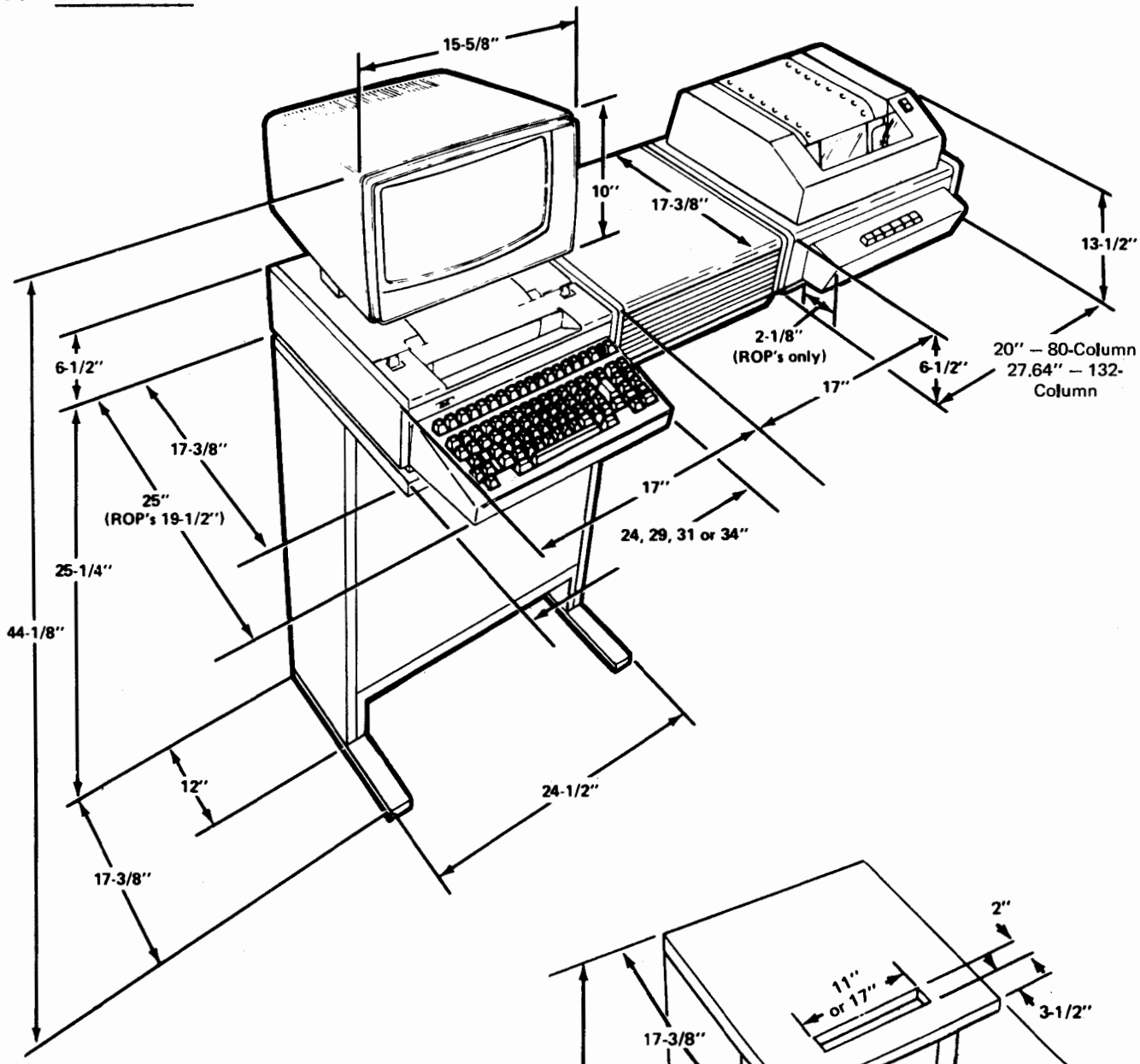

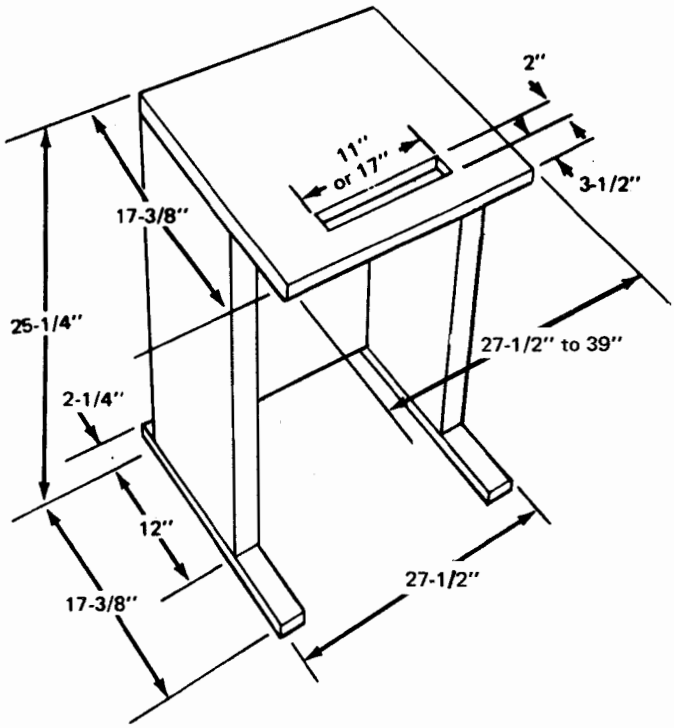

B. SET AND STATION IDENTIFICATION (Cont)

9. DIMENSIONS (Cont)

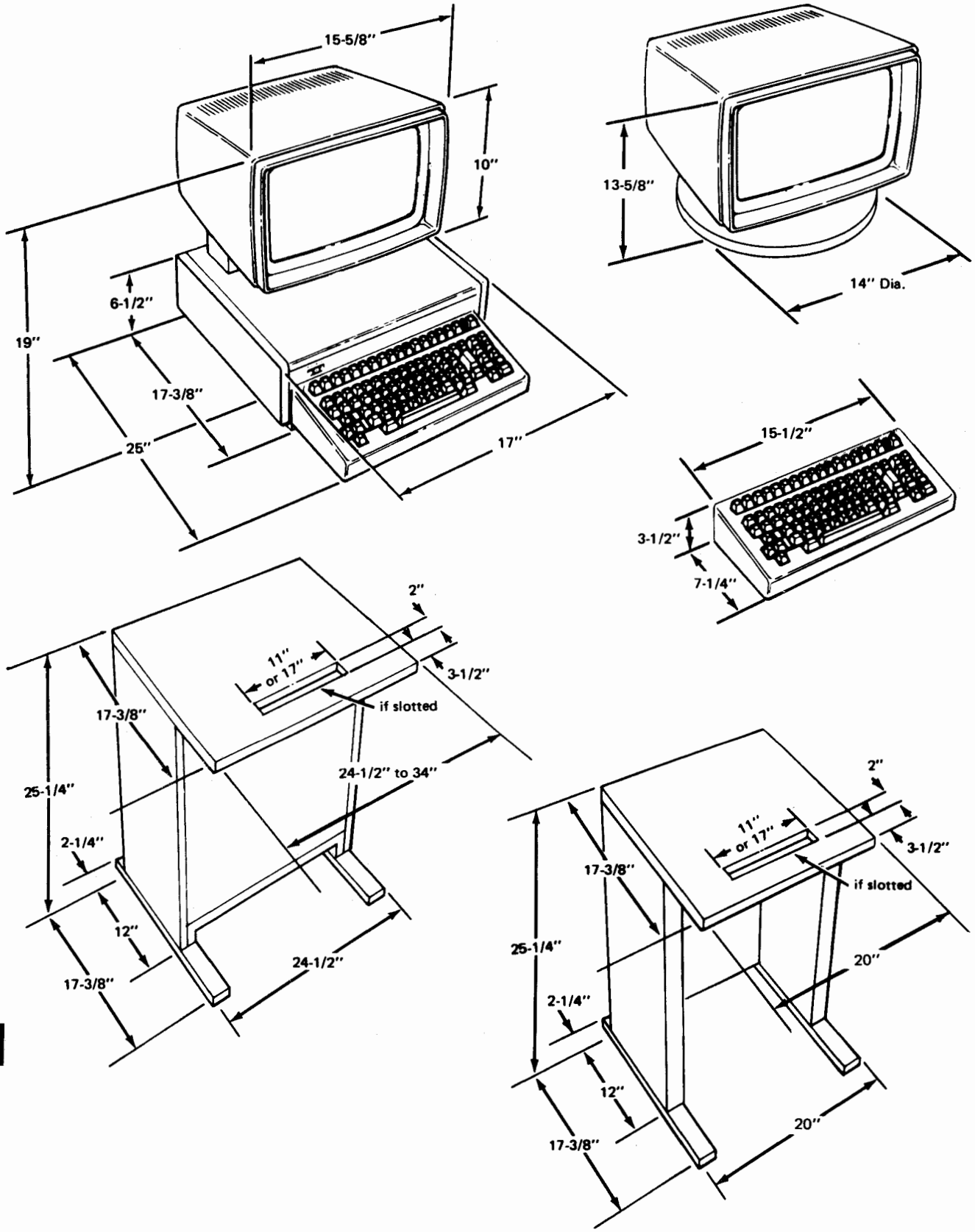

C. TESTING

1. GENERAL

All standard telephone line and data modem checks should be performed before the initial on-line checkout of the Model 40 Station. If trouble analysis indicates a problem in the modem line or data set, refer to the appropriate equipment support literature for the trouble analysis.

Before performing checkout procedures make sure that the station is connected to a properly grounded ac power source, all cards and cable connectors are fully seated, the lids are closed, the paper is installed, etc. The power switches should be turned on or off under the direction of the checkout or other procedures. The checkout should always be performed in the sequence given, since the trouble analysis is based on prior requirements being met. If the indicated response is not obtained in any step of a checkout procedure, repeat the step to make sure that the procedure has been performed correctly. If the results are still unsatisfactory, perform the indicated trouble analysis by going to the troubleshooting portion of the indicated section (example: Display Monitor, Part 2 of this manual).

To quickly locate the appropriate operational checkout procedures for the Model 40 Set or Station under test, refer to index.

Off-Line Checkout

Off-line checkout procedures are indicated for the various Model 40 Set configurations. In general, the off-line checkout procedure is to be successfully completed before conducting on-line checkouts. Off-line checkout procedures do not require connection to a modem, data set, or other system interface. Since off-line checkout procedures do not check the interface or send and receive capabilities, an on-line checkout is also required to completely test the Model 40 Station.

On-Line Checkout

With the Model 40 Station appropriately interfaced to the system where it will be used, conduct a complete checkout of send and receive capabilities taking into account all option and feature variables. Check all operational modes in sending to or receiving from another station in the system.

Alternatively, for 40/1, 40/2, or 40/3 applications, a back-to-back configuration can be achieved locally via a special cable (see Page 120 C. 6. BACK-TO-BACK CHECKOUT USING EIA INTERFACE CABLE). Note that checkout via the back-to-back cable does not test the modem and therefore cannot be considered a complete station test. Also, there are certain features which may not be possible to check. For 40/0 application, a TSG803 test set (available from Teletype Corporation) can be used for send and receive checkout.

C. TESTING (Cont)

2. PROTECTIVE GROUND AND PREOPERATIONAL CHECKS

Protective Ground Checks

As part of standard repair shop procedure, all Model 40 Sets and Stations should be subjected to a protective ground check prior to operation to insure that there is no potential shock hazard.

Check that the following ground straps are present.

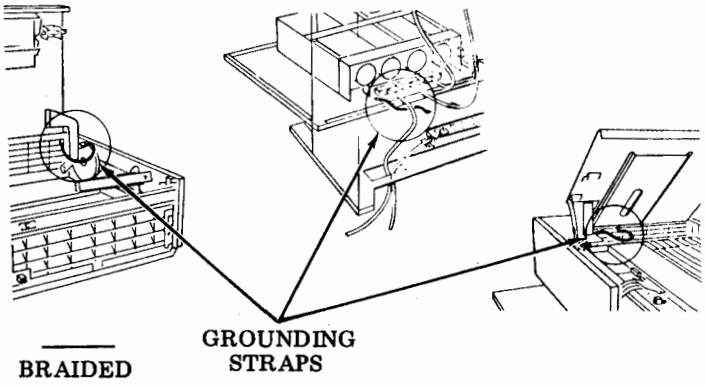

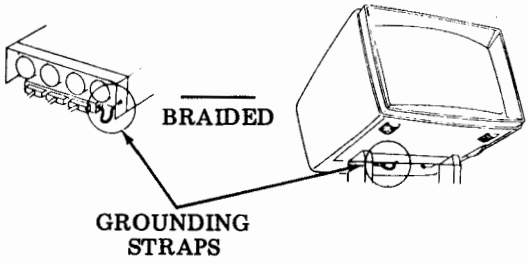

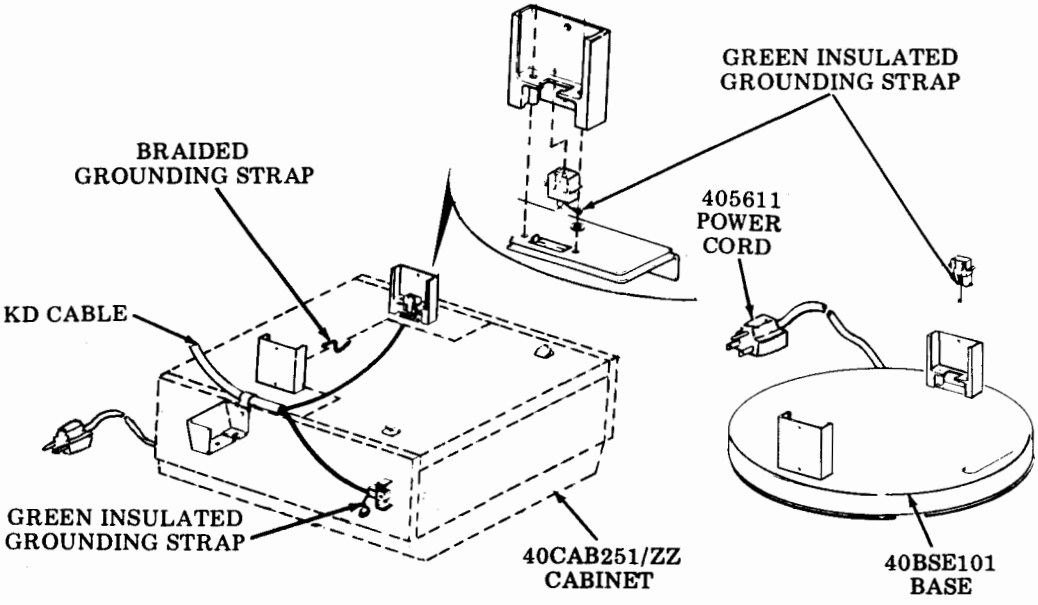

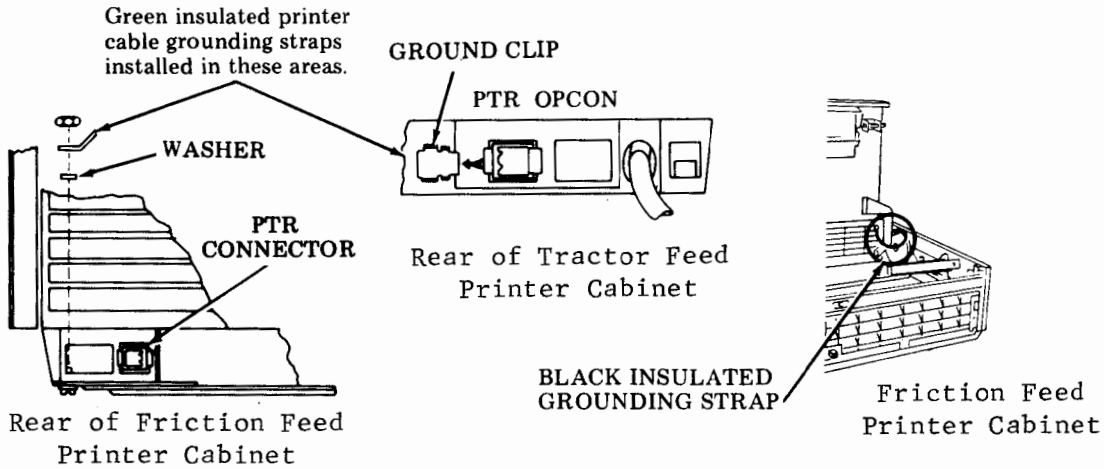

Using an ohmmeter, check the resistance between the protective ground lug of the ac line cord and each unit frame in the station. Resistance shall not be more than 0.5 ohms. Use "R" times "1" scale.

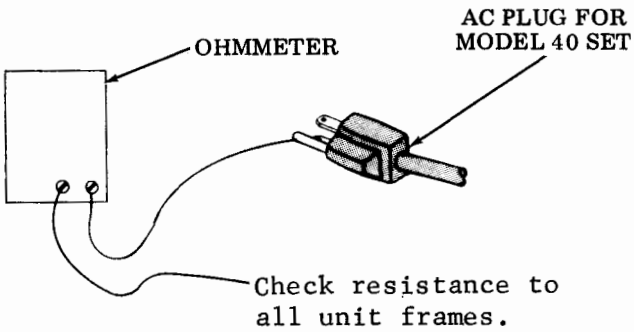

Using an ohmmeter (115 V ac power applied to set), no more than 5 mA current shall be measured through a 150 ohm resistor 5 percent (1/8 watt) to protective ground. For this check use an ac extension cord or equivalent modified in the following manner.

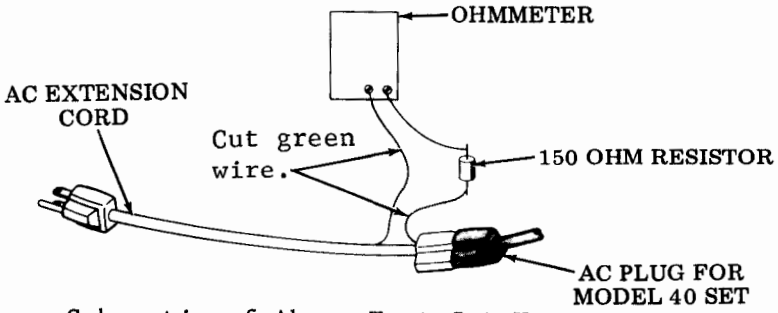

Schematic of Above Test Set-Up

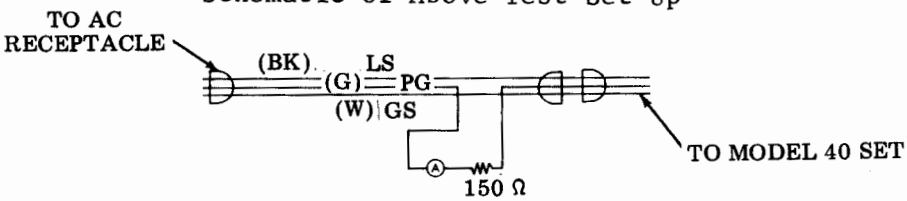

C. TESTING (Cont)

2. PROTECTIVE GROUND AND PREOPERATIONAL CHECKS (Cont)

Preoperational Checks

Before turning on any equipment, check the following:

Is station connected to a properly grounded ac service?
Are all circuit cards and cable connectors in the proper location and fully seated?
Are all cabinet lids and pedestal doors closed?
In KDP and ROP, are printer paper and ribbon properly installed?

In addition to the above, determine the options and features present in the station. In cases where the results are affected by options, alternate results for each option are provided. It is advisable to fill out a Station Feature and Option Record as illustrated on Page 10-12, OPTIONS FOR MODEL 40 SETS and store the record with each station in the storage pockets provided in the lid of the logic module cabinet or in the pedestal.

3. BRIEF OFF-LINE CHECKOUT -- KD AND KDP SETS (40/0, 40/1, 40/2, AND 40/3)

STEP	PROCEDURE	RESULTS	TROUBLE ANALYSIS
1	Turn on power switches.	LOCAL indicator lights. Fans operate.	Set Analysis -- Part 10
2	Turn on power to monitor and set brightness to maximum.	Within 10 seconds raster appears with no. 1 segment marker and cursor as shown. 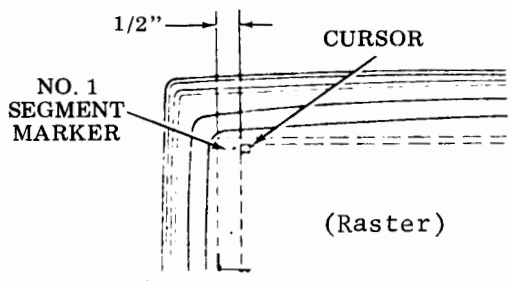 NOTE: If random characters appear or if cursor is not at home position, depress HOME and CLEAR.	Set Analysis -- Part 10 Display Monitor Analysis -- Part 2
3	Adjust brightness and tube tilt to personal preference.	Cursor and segment marker clearly displayed, with raster barely visible. Glare from external light on screen should be minimal.	Display Monitor Analysis -- Part 2

STEP	PROCEDURE	RESULTS	TROUBLE ANALYSIS
4	Lightly depress cursor right (→), down (↓), left (←), and up (↑), in that order.	Cursor moves one position in the direction indicated for each depression.	Set Analysis -- Part 10
5	Repeat Step 4, but depress cursor controls fully and hold depressed until cursor stops moving.	Cursor traces outer perimeter of display, stopping at each corner, and ends at home position.	Display Logic -- Part 5
6a	Turn monitor power switch off (under left side of CRT). Keyboard several lines of data. Turn monitor power switch on.	No data should be entered into display.	Replace 410675 or 410669 circuit card in controller logic.
6b	IF KEYBOARD HAS CAPS LOCK KEYTOP, DEPRESS CAPS LOCK KEY. Enter a line of Es at top and bottom of display, then HOME cursor.	Display appears as shown with all requirements as indicated.	Set Analysis -- Part 10 Refer to adjustments of monitor to meet requirements -- Part 2.

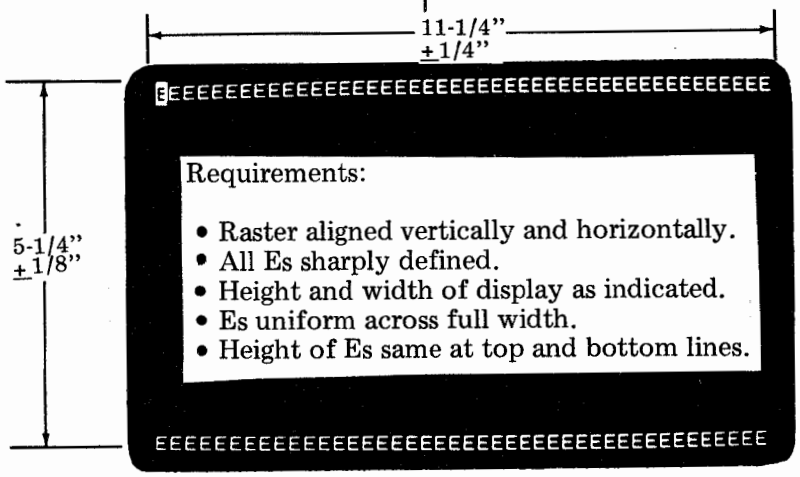
11-1/4"
±1/4"
5-1/4"
±1/8"
EEEE

C. TESTING (Cont)

3. BRIEF OFF-LINE CHECKOUT -- KD AND KDP SETS (40/0, 40/1, 40/2, AND 40/3) (Cont)

STEP	PROCEDURE	RESULTS	TROUBLE ANALYSIS
9	TRACTOR FEED PRINTER ONLY		
	Depress and release FORMS ADVANCE button (black) on printer cabinet cover.	Paper feeds out until first line of next form is reached, then stops.	
10	Unlatch and raise printer cabinet cover.		
11	Raise cover interlock switch to maintenance position.		
12a	Set test switch (see Step 7) to ON, allow printer to print several lines, then turn test switch OFF.	Printer turns on and prints font identification symbol ⁂ repeatedly until switch is turned off.	Printer Analysis -- Refer to Printer Manual 355.
12b	Set LF switch to 2. Set test switch to ON. Allow printer to print several lines, then turn test switch OFF and return LF switch to 1.	Printer turns on and prints font identification symbols as above except with double line feed spacing until test switch is turned off.	Printer Analysis -- Refer to Printer Manual 355.
13	FRICTION FEED PRINTER		
	Lift paper roll to simulate a paper alarm. Lower paper roll, guide paper through window, and close cabinet cover.	Low paper indicator lights. Low paper indicator goes out.	Printer Analysis -- Refer to Printer Manual 355.
	TRACTOR FEED PRINTER		
	Tear off next form under pedestal top, then depress PAPER button on cabinet top until last form passes through printer. Reload forms, guide first form through window, and close cabinet cover.	PAPER indicator lights. PAPER indicator goes out.	
14*	Type an EOT in the lower right hand corner of the display and home cursor. Depress PRINT LOCAL, and while cursor is moving through third or fourth line of display, depress LOCAL.	LOCAL goes out. PRINT LOCAL and SEND light. Cursor moves through line of Es at top of display, returns to left, and	Set Analysis -- Part 10

*KD of KD and ROP does not have PRINT LOCAL feature. KDP printer of KDP and ROP responds to PRINT LOCAL; printer of ROP does not respond.

STEP	PROCEDURE	RESULTS	TROUBLE ANALYSIS
14 (Cont)	PRINT ON LINE / PRINT LOCAL	moves through lines of spaces (blank lines). Printer prints line of Es. NOTE: Printing may occur in all 80 character positions or some Es may be carried over to next line, depending on Option 17.	
	NOTE: If 410018 card (continuous scrolling) is present in display logic, it is necessary to keyboard in (prior to depressing PRINT LOCAL) one of the following message ending codes (EOT, ETX, FF, GS, DC3, or CR) at any location in the display to allow set to enter Print Local mode (or any send mode).	Printer line feeds but does not print for each line of spaces. When LOCAL is depressed, SEND and PRINT LOCAL indicators go out and LOCAL indicator lights. Printer turns off. NOTE: Printer may or may not feed out 16 lines of paper before turning off, depending on Option 18. Tractor printer may form-out depending on Option 18. and Forms switch.	Printer Analysis -- Part 8
This completes Brief Off-Line Checkout -- KD and KDP Sets (All).			

4. COMPLETE OFF-LINE CHECKOUT -- KD AND KDP SETS (40/0, 40/1, 40/2, AND 40/3)

This table checks all features and options of Model 40 KD and KDP Sets (including those equipped w/9140 Controller) in the Local mode. Includes KD (or KDP) portion of KD-ROP, KD and ROP, KDP and ROP, KD-ROP with IRS and KDP-ROP with IRS.

STEP	PROCEDURE	RESULTS	TROUBLE ANALYSIS
1	Power on. Monitor brightness adjusted for desired viewing level. LOCAL key depressed. Depress HOME and CLEAR keys. Put CAPS LOCK key in down position.	Cursor goes to home position and all data is cleared from screen.	Set Analysis -- Part 10 Display Logic Analysis -- Part 5.

C. TESTING (Cont)

4. COMPLETE OFF-LINE CHECKOUT -- KD AND KDP SETS (40/0, 40/1, 40/2, AND 40/3) (Cont)

STEP	PROCEDURE	RESULTS	TROUBLE ANALYSIS
2	Starting with top row and moving from left to right, depress each unshaded key shown below. Depress RETURN and NEW LINE keys.	Characters displayed as shown on Page 106. Cursor goes to beginning of next line.	Set Analysis -- Part 10
3	If keyboard has CAPS LOCK keytop, depress and release CAPS LOCK key so it returns to upper position, then repeat Step 2.	Characters displayed as shown on Page 106. Cursor goes to beginning of next line.	
4	Hold left SHIFT key depressed. Starting with top row and moving from left to right, depress each unshaded key as shown below. Hold right SHIFT key depressed and depress [?/] key. Depress NEW LINE key.	Characters displayed as shown on Page 106. Cursor moves to beginning of next line.	

STEP	PROCEDURE	RESULTS	TROUBLE ANALYSIS
5	Hold left CONTROL key depressed. Depress all unshaded keys below in sequence shown by circled numbers.*	Characters displayed as shown on Page 106. Cursor moves to beginning of next line.	

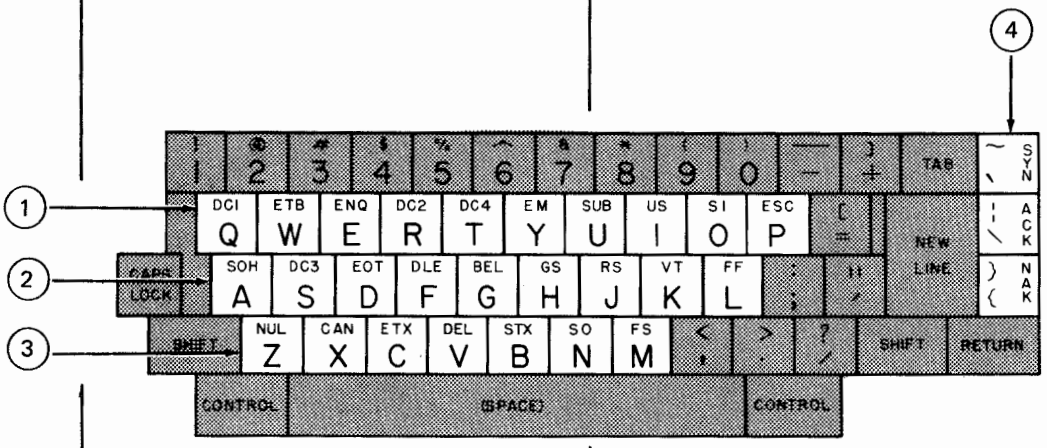

*If Model 40 Option 30.a. is installed, the SEND key will automatically light and the cursor will automatically go home when a valid message ending character is entered. If this occurs, depress the LOCAL key and use cursor positioning controls to return cursor to the position after the message ending character.

C. TESTING (Cont)

4. COMPLETE OFF-LINE CHECKOUT -- KD AND KDP SETS (40/0, 40/1, 40/2, AND 40/3) (Cont)

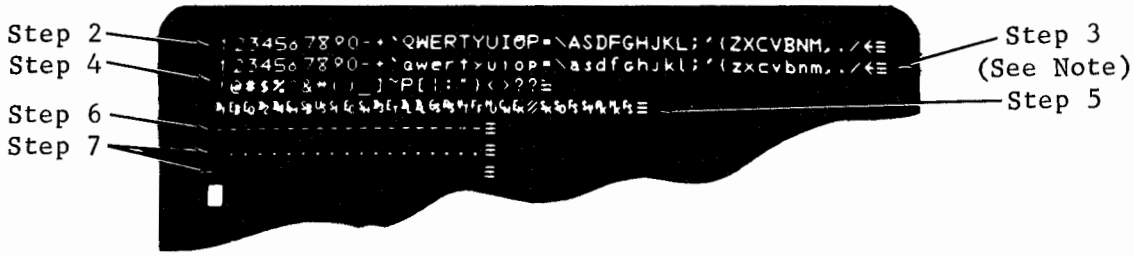

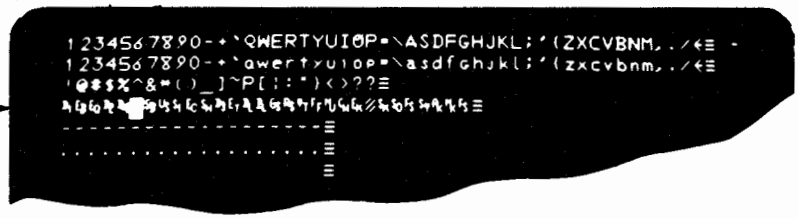

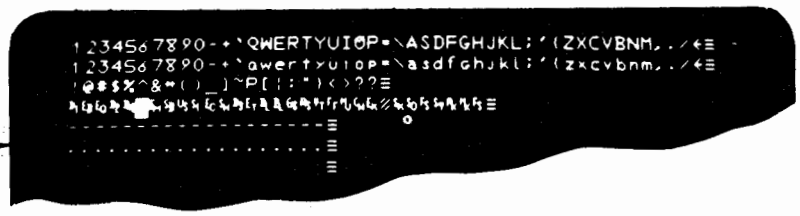

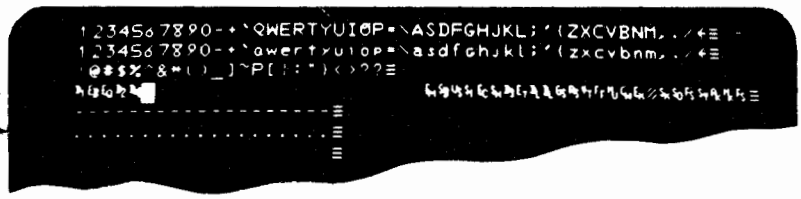

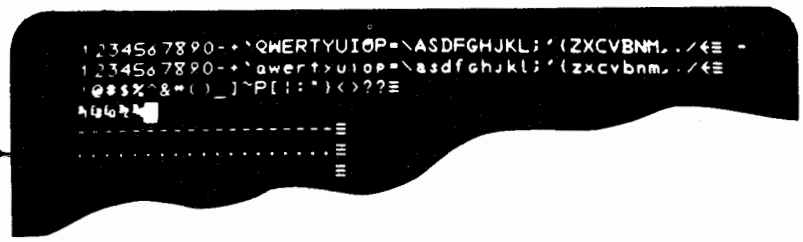

NOTE: Step 3 applies only if keyboard has CAPS LOCK key.

STEP	PROCEDURE	RESULTS	TROUBLE ANALYSIS
5 (Cont)	Hold right CONTROL key depressed and depress [FS M] key. Depress NEW LINE key.		
6	Fully depress and hold [−] key until about half line of characters is displayed. Depress NEW LINE key.	Repeated - characters and ≡ symbol displayed as shown on Page 106. Cursor moves to beginning of next line.	Set Analysis -- Part 10 Opcon Analysis -- Part 3 Controller Analysis -- Part 6
7	Repeat Step 6 using [>] key, and then again using Spacebar.	Repeated . characters followed by ≡ symbol, and repeated spaces followed by ≡ symbol, displayed as shown on Page 106. Cursor moves to beginning of next line.	
8	Depress cursor keys as necessary to position cursor over E_M character in line of control characters.		
9	Lightly depress CHAR INSRT key.	All characters to right of and including E_M move one position to the right as shown on Page 106.	
10	Fully depress and hold CHAR INSRT key until characters stop moving.	All characters to right of and including E_M move right continuously until ≡ symbol reaches right edge as shown on Page 106.	
11	Lightly depress CHAR DLETE key.	E_M and all subsequent characters move one position to left.	
12	Fully depress and hold CHAR DLETE key until characters stop moving.	E_M and subsequent characters move left continuously and are deleted from display as they reach cursor position.	

C. TESTING (Cont)

4. COMPLETE OFF-LINE CHECKOUT -- KD AND KDP SETS (40/0, 40/1, 40/2, AND 40/3) (Cont)

STEP	PROCEDURE	RESULTS	TROUBLE ANALYSIS
13	THIS STEP APPLIES TO KDP OR KD-ROP ONLY WITH TRACTOR FEED PRINTER		
	Hold CONTROL key depressed and depress [FF L] key three times. NOTE: Make sure Forms switch of printer is On.	Three F_F characters are entered in display to the right of the D_4.	
14	Depress HOME.	Cursor goes to home position.	
15	ALL SETS WITH PRINTERS		
	Depress PRINT LOCAL key. When complete message on monitor has been sent to printer, depress LOCAL key.	LOCAL indicator goes out; PRINT LOCAL and SEND keys light. Cursor moves through display and printer prints according to features and options as shown on Page 109. When LOCAL is depressed, SEND and PRINT LOCAL indicators go out, printer turns off, and LOCAL indicator lights. TRACTOR PRINTER Form-out occurs when first F_F character is sent from display. Lines of - and characters print on next form. (Only one form-out occurs -- second and third F_F characters have no effect.) Spacing from first line of first form to line of - characters on next form equals form length selected by form belt and form selector setting.	Set Analysis -- Part 10 Printer Analysis -- Refer to Printer Manual 355.

Printer Displays

```
1234567890-+`QWERTYUIOP=\ASDFGHJKL;'{ZXCVBNM,./
1234567890-+`qwertyuiop=\asdfghjkl;'{zxcvbnm,./
!@#$%^&*()_]~P[:"}<>??
------------------
....................
```

Up-Low Printer w/o Foldover -- Option 21.a.

```
1234567890-+@QWERTYUIOP=\ASDFGHJKL;'[ZXCVBNM,./
1234567890-+@QWERTYUIOP=\ASDFGHJKL;'[ZXCVBNM,./
!@#$%^&*()_]^P[\:"]<>??
------------------
....................
```

Up-Low Printer w/Foldover -- Option 21.b.
or
Monocase Printer -- Option 22.b.

```
1234567890-+[QWERTYUIOP=\ASDFGHJKL;'[ZXCVBNM,./
1234567890-+[QWERTYUIOP=\ASDFGHJKL;'[ZXCVBNM,./
!@#$%^&*()_]^P[ ]:"]<>??
------------------
....................
```

Monocase Printer w/o Foldover -- Option 22.a.

NOTE 1: Line 2 in all three figures present only if opcon keyboard has CAPS LOCK key.

NOTE 2: Characters shown are for basic type carrier.

NOTE 3: For tractor feed printers with form-out mechanism, lines of - and characters appear on next form.

NOTE 4: Figures shown are for monocase and up-low ASCII.

C. TESTING (Cont)

4. COMPLETE OFF-LINE CHECKOUT -- KD AND KDP SETS (40/0, 40/1, 40/2, AND 40/3) (Cont)

STEP	PROCEDURE	RESULTS	TROUBLE ANALYSIS
16	Depress HOME, then CLEAR key.	Cursor goes to home position and all information is cleared from display.	Set Analysis -- Part 10
17	Enter a line of 80 *s across top of display.	*s are displayed, and cursor remains at right of line.	
18	Depress LINE INSRT key, then enter a line of 80 Us across top of display.	Cursor returns to home position and *s move down one line. Us are displayed above *s.	Display Logic Analysis -- Part 5
STEPS 19 THROUGH 22 APPLY ONLY TO SETS WITH ONE SEGMENT. IF TERMINAL IS EQUIPPED WITH TWO OR THREE SEGMENT DISPLAY, GO TO STEP 23.			
19	Repeatedly depress LINE INSRT until *s move to last line of display.	Cursor returns to home position and *s and Us both move down one line each time LINE INSRT key is depressed. Movement stops when *s reach bottom of display. Cursor stays at home position.	Set Analysis -- Part 10 Display Logic Analysis -- Part 5
20	Depress cursor down (↓) and then cursor right (→) to move cursor to about the middle of the line of Us.		Set Analysis -- Part 10
21	Depress LINE DLETE key.	Cursor returns to left margin, and Us are removed. *s move up one line to replace Us.	
22	Depress LINE INSRT key several times.	*s move down one line to bottom of display and stop. Cursor does not move.	
STEPS 23 THROUGH 36 APPLY ONLY TO SETS EQUIPPED WITH TWO OR THREE SEGMENT DISPLAY.			
23	Depress HOME.	Cursor goes to home position.	Set Analysis -- Part 10

STEP	PROCEDURE	RESULTS	TROUBLE ANALYSIS
24	Depress SEGMT ADV key twice for terminals with two segments, or three times for terminals with three segments.	Segment marker changes from segment 1 marker (.) to segment 2(:), and on terminals with three segments to segment 3 marker (⁝), and back to segment 1 marker. *s and Us disappear as segment changes, and reappear at top of display when segment 1 marker reappears. Cursor does not move.	
25	Depress SCROL UP key one time.	Segment 1 marker and Us disappear from top of display. *s move to top of display, and segment 2 marker appears at bottom left of display. Cursor does not move.	
26	Depress SCROL UP fully. NOTE: Operation with 410009 or 410018 continuous scrolling circuit card. The 410009 circuit card is manufacturer discontinued.	Segment 2 marker (then 3 marker if terminal has three segments) moves up the display. *s disappear from top of display. Scrolling stops when segment marker of last segment reaches top line of display. Cursor does not move (see note). Scrolling will not stop when segment marker of last segment reaches top line of display, but will continue while key is fully depressed.	
27	Depress SCROL DOWN once, then fully. NOTE: Operation with 410009 or 410018 continuous scrolling circuit card.	Segment marker at upper left moves down one line, then moves down continuously and disappears as segment marker of previous segment appears at top left. When segment 1 marker appears at top left of display, scrolling stops. *s and Us reappear in original position at top of display when segment 1 returns to display. Cursor does not move (see note).	Set Analysis -- Part 10 Display Logic Analysis -- Part 5

C. TESTING (Cont)

4. COMPLETE OFF-LINE CHECKOUT -- KD AND KDP SETS (40/0, 40/1, 40/2, AND 40/3) (Cont)

STEP	PROCEDURE	RESULTS	TROUBLE ANALYSIS
27 (Cont)		Scrolling will not stop when segment marker of last segment reaches top line of display, but will continue while key is fully depressed.	
28	Repeatedly depress LINE INSRT until *s move to last line of segment 1.	*s and Us both move down one line each time LINE INSRT is depressed. Cursor does not move.	Set Analysis -- Part 10 Display Logic Analysis -- Part 5
29	Depress cursor down (↓) and then cursor right (→) to position cursor at about the middle of the line of Us.		
30	Depress LINE DLETE key.	Cursor returns to left margin and Us are removed. *s move up one line to replace Us.	
31	Depress LINE INSRT several times.	*s move down one line to bottom of display on first depression, then disappear from display on second depression. Cursor does not move.	
32	Depress SEGMT ADV key.	Segment 2 marker appears at top left of display. *s appear a few lines down from top in segment 2. Cursor does not move.	
33	Depress HOME and CLEAR.	Cursor goes to home position. Segment 1 is displayed.	
34	Depress SEGMT ADV to display last segment of page.	Segment marker of last segment appears at upper left of display. *s have been cleared from segment 2. Cursor remains in home position.	Set Analysis -- Part 10

STEP	PROCEDURE	RESULTS	TROUBLE ANALYSIS
35	Depress cursor down (↓) to position cursor at about next to last line of display, then enter a few Us in this line.		
36	Depress LINE INSRT key several times.	Cursor returns to left margin and Us move to bottom of display, then stop.	
IF SET IS EQUIPPED WITH FULL EDIT FEATURE, GO TO STEP 37. IF NOT, THIS COMPLETES OFF-LINE CHECKOUT.			
37	Depress HOME, then CLEAR.	Cursor goes to home position and display is cleared.	Set Analysis -- Part 10
38	Alternately depress TAB SET and Spacebar until cursor reaches end of line.	Column of tab marks is displayed in every character position of page. Alarm sounds at 73rd and 80th character positions. (On terminals with more than one segment, depress SEGMT ADV key as necessary to view tab columns on other segment(s), then return to segment 1.)	Controller Analysis -- Part 6 Display Logic Analysis -- Part 5 Opcon Analysis -- Part 3
39	Home cursor and depress TAB CLEAR.	All tab marks (on all segments) are cleared.	Set Analysis -- Part 10
40	Depress HIGH LIGHT key.	HIGH LIGHT key lights.	
41	Enter a full line of *s at top of display.	*s continuously flash between half and full intensity. Alarm sounds at 73rd and 80th character positions. Cursor remains at right end of line.	
42	Depress HIGH LIGHT key again.	HIGH LIGHT indicator goes out.	
43	Depress LINE INSRT key.	Cursor moves to left margin, and highlighted *s move down one line.	Set Analysis -- Part 10
IF OPTION 12.a. IS ENABLED ON 410675 CARD (SEE STATION FEATURE AND OPTION RECORD), TEMPORARILY CHANGE TO OPTION 12.b. UNTIL CHECKOUT IS COMPLETE.			

C. TESTING (Cont)

4. COMPLETE OFF-LINE CHECKOUT -- KD AND KDP SETS (40/0, 40/1, 40/2, AND 40/3) (Cont)

STEP	PROCEDURE	RESULTS	TROUBLE ANALYSIS
44	Depress FORM ENTER.	FORM ENTER indicator lights.	KD or KDP Controller Analysis -- Part 6 Set Analysis -- Part 10 Display Logic Analysis -- Part 5
45	Enter a full line of Us at top of display.	Us are displayed at half intensity (protected). Alarm sounds at 73rd and 80th character positions. Cursor remains at right end of line.	
46	Depress LINE INSRT key.	Cursor moves to left margin, and lines of *s and Us both move down one position. Cursor remains in home position.	
47	Depress CLEAR.	Screen is cleared.	
48	Depress FORM ENTER key.	FORM ENTER indicator goes out.	
49	Enter message from Page 115 in lines 1 through 9 of display. (Procedure is indicated in figure.)	Message appears as shown on Page 115. (To observe protected spaces, increase monitor brightness and note that all protected data has darker background than unprotected data.)	
50	Depress CHAR INSRT key fully and hold until movement stops.	Word QUICK in line 1 moves to tab column and stops. No other characters affected.	Set Analysis -- Part 10
51	Depress CHAR DLETE key twice.	Word QUICK in line 1 moves two positions left. No other characters affected.	
52	Depress TAB.	Cursor moves to tab column. Tab symbol (▶) appears at original position of cursor. All characters passed over by cursor are erased from display.	

STEP	PROCEDURE	RESULTS	TROUBLE ANALYSIS
53	Depress CHAR INSRT fully and hold until movement stops.	Word UNPROTECTED moves three positions to right, stopping when it reaches word PROTECTED. No other characters affected.	

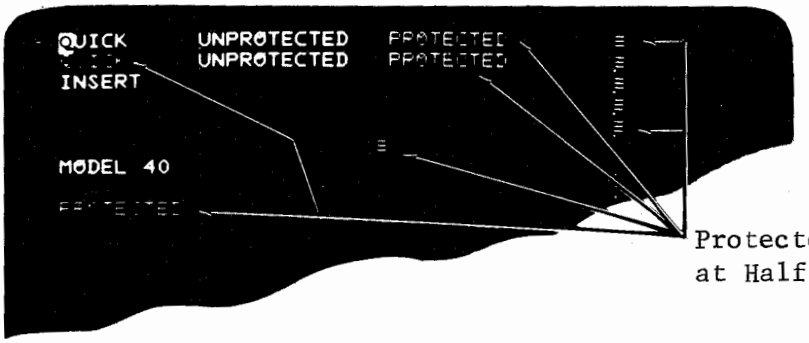

NOTE: Depress each key once unless number of depressions is indicated in parentheses.

LINE 1

Type QUICK
Depress Space (5)
Depress TAB SET
Type UNPROTECTED
Depress Space (3)
Depress FORM ENTER
Type PROTECTED
Depress FORM ENTER
Depress Space (8)
Depress FORM ENTER
Depress NEW LINE

LINE 2

Type QUICK
Depress FORM ENTER
Depress Space (5)
Type UNPROTECTED
Depress Space (3)
Depress FORM ENTER
Type PROTECTED
Depress FORM ENTER
Depress Space (8)
Depress FORM ENTER
Depress NEW LINE
Depress FORM ENTER

LINE 3

Type INSERT
Depress Space until cursor is under NEW LINE symbol.
Depress FORM ENTER
Depress NEW LINE

LINE 4 AND 5

Depress Cursor Right (→) until cursor is under NEW LINE symbol.
Depress NEW LINE

(Repeat for Line 5)

LINE 6

Depress Cursor Right (→) until cursor is at about 23rd character position.
Depress NEW LINE
Depress FORM ENTER

LINE 7

Type MODEL
Depress Space
Type 40

LINE 8

Depress CURSR RTRN
Depress Cursor down (↓) twice

LINE 9

Depress FORM ENTER
Type PROTECTED
Depress FORM ENTER
Depress HOME

C. TESTING (Cont)

4. COMPLETE OFF-LINE CHECKOUT -- KD AND KDP SETS (40/0, 40/1, 40/2, AND 40/3) (Cont)

STEP	PROCEDURE	RESULTS	TROUBLE ANALYSIS
54	Depress CHAR DLETE key fully and hold until movement stops.	Word UNPROTECTED is moved left and completely erased. No other characters affected.	
55	Depress TAB.	Cursor moves to first character position after word PROTECTED. Tab symbol (▶) appears at original position of cursor.	
56	Depress Spacebar once, then depress it fully.	Alarm sounds once when Spacebar is depressed first time. Cursor moves to character position preceding protected New Line symbol. Alarm sounds continuously, and cursor does not advance beyond this position.	
57	Depress TAB.	Cursor moves to end of protected word QUICK in line 2.	
58	Depress CURSOR TAB three times.	Cursor moves to tab mark on first depression. Cursor moves to space following word PROTECTED on second depression. Cursor moves to beginning of word INSERT in line 3 on third depression. No characters altered in any way.	Set Analysis -- Part 10 Opcon Analysis -- Part 3 Display Logic Analysis -- Part 5
59	Depress LINE INSRT three times.	Word INSERT moves down two lines and stops. Rest of display does not change.	
60	Position cursor over M in word MODEL, then depress LINE INSRT twice.	Words MODEL 40 move down one position and stop.	

STEP	PROCEDURE	RESULTS	TROUBLE ANALYSIS
61	Move cursor over P at beginning of line 9, and type some miscellaneous characters.	Alarm sounds each time a key is depressed. (No characters can overwrite a protected character.)	
62	Depress HOME, CLEAR, then TAB CLEAR.	Cursor goes to home position. All unprotected characters and tab columns are cleared. Protected characters remain on display.	
63	Depress FORM ENTER.	FORM ENTER indicator lights.	
64	Depress CLEAR.	All characters are cleared from display.	
65	Depress FORM ENTER.	FORM ENTER indicator goes out.	
66	If Option 12.a. was originally present on 410675 Card, restore this option (unless further checkout is to be performed).	With Option 12.a. selected, FORM ENTER indicator will no longer light when FORM ENTER is depressed in Local mode.	
This completes Off-Line Checkout -- KD and KDP Sets (40/0, 40/1, 40/2, and 40/3)			

5. COMPLETE OFF-LINE CHECKOUT -- ROP SETS (WITH 40C103 CONTROLLER)

STEP	PROCEDURE	RESULTS	TROUBLE ANALYSIS
1	Preliminary requirements: a. Ribbon and paper loaded. b. Switches (top right of printer cabinet, cover raised) set as follows: LF-1 Test-Off Forms (Tractor Feed Only)-On. c. Cabinet cover and pedestal door closed.		

C. TESTING (Cont)

5. COMPLETE OFF-LINE CHECKOUT -- ROP SETS (WITH 40C103 CONTROLLER) (Cont)

STEP	PROCEDURE	RESULTS	TROUBLE ANALYSIS
2	Turn on power.	IN SERVICE indicator lights. Fans move air in pedestal. In tractor feed printer, fan in printer cabinet cover also turns on.	Set Analysis -- Part 10 ROP Controller Analysis -- Part 7
3	Momentarily depress PAPER button (red) on cover of printer cabinet.	Paper feeds out as long as button is depressed.	Opcon Analysis -- Part 3
4	TRACTOR FEED PRINTER ONLY		Printer Analysis -- Refer to Printer Manual 355.
	Depress and release FORMS ADVANCE button (black) on printer cabinet cover.	Paper feeds out until first line of next form is reached, then stops.	
5	Unlatch and raise printer cabinet cover.	IN SERVICE indicator goes out.	
6	Raise cover interlock to maintenance position.	IN SERVICE indicator lights.	Set Analysis -- Part 10
7	Momentarily set Test switch to ON position then return to OFF position.	Font identification symbol (or) prints repeatedly while switch is on.	ROP Controller Analysis -- Part 7
8	FRICTION FEED PRINTER		Opcon Analysis -- Part 3 Printer Analysis -- Refer to Printer Manual 355.
	Lift paper roll to simulate a paper alarm.	PAPER indicator lights; IN SERVICE indicator goes out.	
	Lower paper roll. Guide paper through window and close cabinet cover.	LOW PAPER indicator goes out; IN SERVICE indicator lights.	
	TRACTOR FEED PRINTER		
	Tear off next form under pedestal top, then depress PAPER button on cabinet top until last form passes through printer.	PAPER indicator lights; IN SERVICE indicator goes out.	
	Reload forms and close cabinet cover.	PAPER indicator goes out; IN SERVICE indicator lights.	

STEP	PROCEDURE	RESULTS	TROUBLE ANALYSIS
9	Depress TEST (early design designated TRANS START) key (if present) on opcon, then after a few seconds depress again. NOTE: If keytop is not present on opcon, remove blocking keytop to left of IN SERVICE key. Depress switch once to turn on and second time to turn off.	TEST or TRANS START indicator lights and character set is printed repeatedly as shown below. Indicator goes out and printing stops when depressed second time.	

```
 !"#$%&'()*+,-./0123456789:;<=>?@ABCDEFGHIJKLMNOPQRSTUVWXYZ[\]^_
 !"#$%&'()*+,-./0123456789:;<=>?@ABCDEFGHIJKLMNOPQRSTUVWXYZ[\]^_
 !"#$%&'()*+,-./0123456789:;<=>?@ABCDEFGHIJKLMNOPQRSTUVWXYZ[\]^_
 !"#$%&'()*+,-./0123456789:;<=>?@ABCDEFGHIJKLMNOPQRSTUVWXYZ[\]^_
 !"#$%&'()*+,-./0123456789:;<=>?@ABCDEFGHIJKLMNOPQRSTUVWXYZ[\]^_
 !"#$%&'()*+,-./0123456789:;<=>?@ABCDEFGHIJKLMNOPQRSTUVWXYZ[\]^
```

Option 19. a. Enabled

```
 /012345678;<=>?@ABCDEFGHIJKLMNOPQRSTUVWXYZ[\]^_`abc#
=>?@ABCDEFGHIJKLMNOPQRSTUVWXYZ[\]^_`abc#%&'()*+,-/012
LMNOPQRSTUVWXYZ[\]^_`abc#%&'()*+,-/012345678;<=>?@
```

Line feed detected as errored character; printing continues to end of line.

Option 19. b. Enabled

```
 !"#$%&'()*+,-./0123456789:;<=>?@ABCDEFGHIJKLMNOPQRSTUVWXYZ[\]^_
 !"#$%&'()*+,-./0123456789:;<=>?@ABCDEFGHIJKLMNOPQRSTUVWXYZ[\]^_
 !"#$%&'()*+,-./0123456789:;<=>?@ABCDEFGHIJKLMNOPQRSTUVWXYZ[\]^_
 !"#$%&'()*+,-./0123456789:;<=>?@ABCDEFGHIJKLMNOPQRSTUVWXYZ[\]^_
```

Option 19. c. Enabled

```
 !"#$%&'()*+,-./0123456789
                          :;<=>?@ABCDEFGHIJKLMNO
                                                PQRSTUVWXYZ[\]^_
 !"#$%&'()*+,-./012345678
                         9:;<=>?@ABCDEFGHIJKLMNO
                                                PQRSTUVWXYZ[\]^_
 !"#$%&'()*+,-./0123456789:;<=>?@ABCDEFGHIJKLMN
                                               OPQRSTUVWXYZ[\]^_
```

The TEST (early design designated TRANS START) character set will print as above (in 40C103 and 40C303 Controller) if Option 19.c. is enabled and Data Stacking Option (38) is enabled in 40C103/AE RO Controller (410580 circuit card). The locations of line feeds may vary from example shown.

NOTE: Printed characters shown for basic monocase type character (A identification symbol) and for basic up-low type character (A/B identification symbol). For other type carriers, substitute characters as necessary.

C. TESTING (Cont)

5. COMPLETE OFF-LINE CHECKOUT -- ROP SETS (WITH 40C103 CONTROLLER) (Cont)

STEP	PROCEDURE	RESULTS	TROUBLE ANALYSIS
10	Raise printer cabinet cover and set LF switch to position 2. Close cover and depress TRANS START key. While printer is printing, raise cover.	Repeated character set prints with double line spacing. When cover is raised, printer stops and IN SERVICE indicator goes out.	
11	Restore setting of LF switch (or leave in position 2 if double line spacing is desired). Depress (release) TRANS START key. If blocking keytop was removed in Step 9, restore keytop to opcon. Close cabinet cover.	IN SERVICE indicator lights.	
This completes Off-Line Checkout -- ROP Sets (With 40C103 Controller)			

6. BACK-TO-BACK CHECKOUT USING EIA INTERFACE CABLE (40/1, 40/2, AND 40/3)

Although on-line checkout of the Model 40 Station is not complete if the associated modem is not used for the checkout procedure, it is sometimes desirable to test the set or its components in a back-to-back configuration. This is possible for 40/1, 40/2, or 40/3 as shown below using an EIA interface back-to-back cable (make locally per manufacturing drawing provided). Note that when operating back-to-back a separate full edit Model 40 KD or KDP (referred to as Test Set) is required. Also, there are certain test procedures and results which must be given special interpretation since the Test Set may not always have the same characteristics as those encountered in system application.

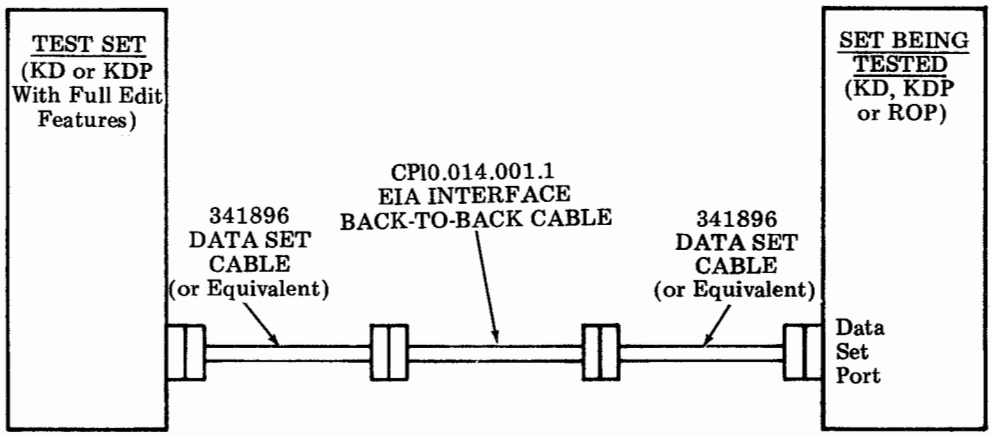

CP10.014.001.1 EIA Back-to-Back Cable Assembly

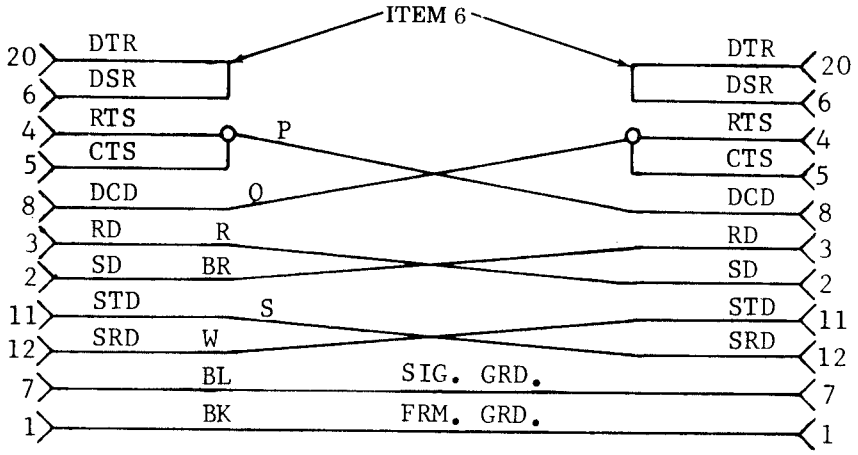

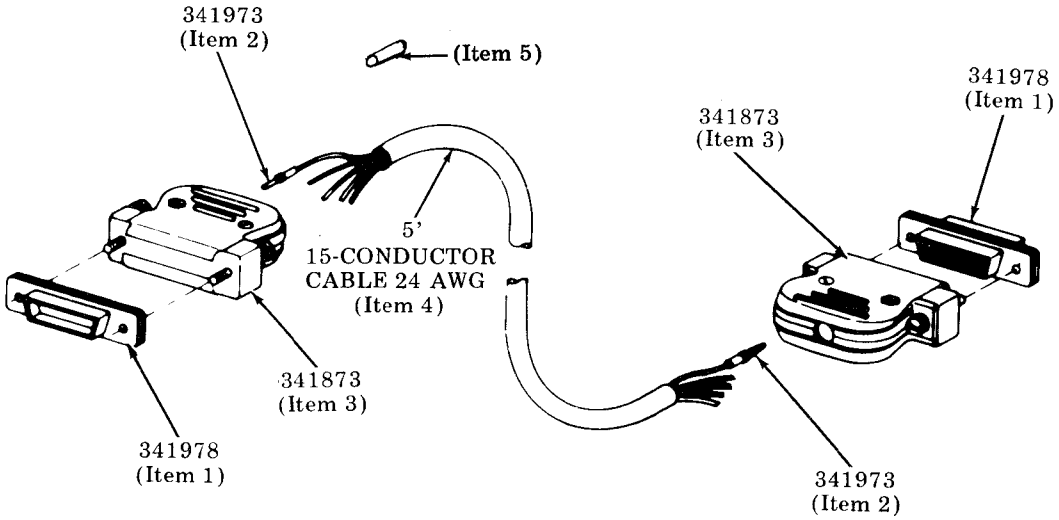

Step 1: Strip off 1 inch outer insulation of Item 4.
Step 2: Strip off 1/4 inch insulation off each wire shown in figure above.
Step 3: Slip 1/4 inch length of insulation (Item 5) over each wire stripped in Step 2.
Step 4: Install (Item 2) pins in connector positions for wires shown in figure above.
Step 5: Solder wires to pins.
Step 6: Strip 1/4 inch insulation off each end of Item 6 (24 AWG wire).
Step 7: Solder in Item 6 as shown in figure above.
Step 8: Install hoods (Item 3).
Step 9: Install connectors (Item 1).

C. TESTING (Cont)

7. COMPLETE OFF-LINE CHECKOUT -- ROP SETS (40C303AA/001 OR 40C303 AD)

STEP	PROCEDURE	RESULTS	TROUBLE ANALYSIS
1	Preliminary requirements: a. Data set or KD (if KD-ROP station connected. b. Ribbon and paper loaded. c. Switches or the printer (cabinet cover raised) are set as follows: LF — 1 (Option 20.a.) Test — Off Forms — On (Option 39.a.). (Tractor feed printers only). d. Cabinet cover closed. *Note:* The TEST key may be labeled TRANS-START.		
2	Turn power on.	All lamps on opcon light momentarily, then all extinguish except IN SERVICE lamp which remains on. Audible alarm (if present) will sound for a few seconds. Fan moves air in printer cabinet.	40C303AA/001 or 40C303AD Controller Analysis — Section 7. Opcon Analysis — Section 3. Check cabinet wiring.
3	Momentarily depress PAPER button (red) on cover of printer cabinet.	Paper feeds out as long as button is depressed.	80-Column and 132-Column Printer Analyses — Printer Manual 355. Check cabinet wiring.
4	Depress and release FORMS ADVANCE button (black) on printer cabinet cover. (Tractor feed printer only).	Paper feeds out until first line of next form is reached, then stops.	80-Column and 132-Column Printer Analyses — Printer Manual 355. Check cabinet wiring.

STEP	PROCEDURE	RESULTS	TROUBLE ANALYSIS
5	Unlatch and raise printer cabinet cover.	IN SERVICE lamp extinguishes. Audible alarm (if present) sounds.	Check cabinet wiring and Interlock switch.
6	Raise cover interlock to maintenance position.	IN SERVICE lamp lights. Audible alarm (if present) goes off.	If motor was on when cover was raised, depress IN SERVICE button. Check Interlock switch and cabinet wiring.
7	Momentarily set Test switch on printer to ON position then return to OFF position.	Printer motor starts. Font identification symbol (such as ≡A≡ ≡A≡ ≡A≡ , ≡A≡ ≡B≡ , etc, depending on type carrier) prints repeatedly while switch is on. Single line feed occurs. Motor turns off when switch is returned to off. With 132-column printer, DATA ERROR or DATA ERROR and IN SERVICE lamps flash in Test mode. With 80-column printer, DATA ERROR lamp may flash in Test mode.	80-Column and 132-Column Printer Analyses — Printer Manual 355
8	Tractor feed printers only: Tear off next form on perforations (end of form) at bottom of printer cabinet, then slowly roll paper out until last form is fed completely out of printer.	If Option 48.a. or 48.b. and form out contact on a lobe of the form out belt (form out contact closed) (132-column printer only) is selected 40P153 type or 80-column printer is used, PAPER lamp lights, IN SERVICE lamp extinguishes, and audible alarm (if present) sounds when form is partly through printer. If Option 48.b. and form out contact not on a lobe of the form out belt (form out contact open) (40P154 type 80-column printer or 132-column printer only) is selected, PAPER lamp lights. IN SERVICE lamp stays lit.	80-Column and 132-Column Printer Analyses — Printer Manual 355
	Reload forms and close cabinet cover.	PAPER lamp extinguishes; IN SERVICE lamp lights. *Note:* If motor is running when cover is closed, IN SERVICE lamp will not light until motor stops.	

C. TESTING (Cont)

7. COMPLETE OFF-LINE CHECKOUT -- ROP SETS (40C303AA/001 OR 40C303AD) (Cont)

STEP	PROCEDURE	RESULTS	TROUBLE ANALYSIS
8 (Cont)	Friction feed printers only: Lift roll of paper so that Low Paper switch is activated. Replace paper roll.		LOW PAPER lamp lights and audible alarm (if present) sounds. LOW PAPER lamp extinguishes and audible alarm goes off.
9	Depress IN SERVICE button. Depress TEST button on opcon, then depress again after a few seconds. *Note 1:* TRANS START button may be labeled TEST. *Note 2:* Choice of options may cause the printer motor to go off after approximately 3 minutes and 30 seconds instead of 30 seconds (Example: the selection of Options 135.b., 143.b. and 148.a. will cause a delay of approximately 3 minutes and 30 seconds).	IN SERVICE lamp extinguishes. TEST lamp lights, printer motor starts, and character set is printed repeatedly as shown. Lamp extinguishes and printing stops when depressed a second time. (DATA ERROR lamp may light.) Form-out occurs (if Option 39.a. is selected). After TEST lamp is extinguished, printer motor goes off after a delay of approximately 60 seconds (if Option 148.a. is selected — see Note 2) or approximately 3 minutes and 30 seconds (if Option 148.b. is selected). IN SERVICE lamp lights approximately 20 seconds before motor goes off.	40C303AA/001 or 40C303AD Controller Analysis — Section 7. If font identification symbol, appears, refer to Printer Manual 355 and verify that Option 19.c. is enabled. 40C303AA/001 or 40C303AD Controller Analysis — Section 7.
	!"#$%&'()*+,-./ϕ123456789:; <=> ?@ABCDEFGHIJKLMNOPQRSTUVWXYZ[\]^_ Local Test Message Generated by TRANS START Button (Option 19.c. must be enabled.)		
10	Check printing quality.	Characters should be clearly legible and unbroken on original copy. *Note:* The TEST message does not check all printing columns.	80-Column and 132-Column Printer Analyses — Printer Manual 355
11	Raise printer cabinet cover and set LF switch to position 2. Close cover. Depress IN SERVICE button. Depress TEST button. While printer is printing, raise cover.	IN SERVICE indicator extinguishes and audible alarm (if present) sounds. IN SERVICE lamp lights. Audible alarm goes off. IN SERVICE lamp extinguishes. Repeated character set prints with double line spacing. When cover is raised, printer stops. TEST indicator remains on and audible alarm (if present) sounds.	80-Column and 132-Column Printer Analyses — Printer Manual 355

STEP	PROCEDURE	RESULTS	TROUBLE ANALYSIS
12	Restore setting of LF switch (or leave in position 2 if Option 20.b. required). Set Forms switch to Off (Option 39.b.).		
	Depress TEST button. Close cabinet cover.	TEST indicator extinguishes. *Note:* DATA ERROR indicator may light. If it does, depress DATA ERROR key to extinguish. Motor starts and a few lines of the test message is printed. IN SERVICE indicator lights when motor goes off.	
	Depress and release FORMS ADVANCE button.	Paper feeds out as long as button is depressed, at same rate as from PAPER button.	80-Column and 132-Column Printer Analyses — Printer Manual 355
13	Raise cover and restore setting of Forms switch (or leave in Off position if Option 39.b. required). Close cabinet cover.	IN SERVICE lamp lights. (Motor may start if time out from step 12 is not completed. IN SERVICE indicator lights approximately 20 seconds before motor goes off.)	
THIS COMPLETES OFF-LINE CHECKOUT OF ROP TERMINALS W/40C303AA/001 OR 40C303AD			

C. TESTING (Cont)

8. COMPLETE OFF-LINE CHECKOUT -- ROP SETS (40C303AC/003)

STEP	PROCEDURE	RESULTS	TROUBLE ANALYSIS
1	Preliminary requirement: a. Data set connected. b. Ribbon and paper loaded. c. Switches (top left) set as follows: LF — 1 (Option 20.a.) Test — Off d. Cabinet cover closed.		
2	Turn power on.	IN SERVICE lamp turns on. Fan moves air in printer cabinet.	40C303AC/003 Controller Analysis — Part 7 of this manual. Opcon Analysis — Part 3 of this manual. Check: a. PAPER lamp not lit. b. Cabinet Interlock switch is closed. c. Cabinet wiring.
3	Momentarily depress PAPER button (red) on cover of printer cabinet.	Paper feeds out as long as button is depressed.	80-Column and 132-Column Printer Analysis — Printer Manual 355 Check cabinet wiring.

STEP	PROCEDURE	RESULTS	TROUBLE ANALYSIS
4	Depress and release FORMS ADVANCE button (black) on printer cabinet cover.	Paper feeds out until first line of next form is reached, then stops.	80-Column and 132-Column Printer Analysis — Printer Manual 355 Check cabinet wiring.
5	Unlatch and raise printer cabinet cover.	IN SERVICE lamp extinguishes.	Check cabinet wiring and Interlock switch.
6	Raise cover interlock to maintenance position.	IN SERVICE lamp stays off.	If motor was on when cover was raised, depress IN SERVICE button. Check Interlock switch and cabinet wiring.
7	Momentarily set Test switch to ON position, then return to OFF position.	Printer motor starts. Font identification symbol (such as ≡A≡ ≡A≡ ≡A≡, ≡B≡, etc, depending on type carrier) prints repeatedly while switch is on. Single line feed occurs. Motor turns off when switch is returned to off.	80-Column and 132-Column Printer Analysis — Printer Manual 355
8	Depress IN SERVICE button. Tear off next form on perforations (end of form) at bottom of printer cabinet, then slowly roll paper out until last form is fed completely out of printer. Reload forms and close cabinet cover.	IN SERVICE lamp lights. PAPER lamp lights and IN SERVICE lamp extinguishes when form is partly through printer. PAPER lamp extinguishes.	80-Column and 132-Column Printer Analysis — Printer Manual 355

C. TESTING (Cont)

8. COMPLETE OFF-LINE CHECKOUT -- ROP SETS (40C303AC/003)

STEP	PROCEDURE	RESULTS	TROUBLE ANALYSIS
9	Depress TEST button on opcon, then depress again after a few seconds.	TEST lamp lights, printer motor starts, and character set is printed repeatedly as shown beginning in column as selected by Options 17., 121., and 131. Lamp extinguishes and printing stops when depressed a second time. Form-out occurs (if Option 39.a. is selected), feed out occurs (if Options 18.b. and 39.b. are selected) or no feed out (if Options 18.a. and 39.b. are selected). After TEST lamp is extinguished, printer motor goes off after a delay of approximately 20 seconds. IN SERVICE lamp lights approximately 3 seconds after TEST lamp extinguishes.	40C303AC/003 Controller Analysis — Part 7 of this manual If font identification symbol appears, refer to Printer Manual 355 and verify that Option 19.a. or c. is enabled. 40C303AC/003 Controller Analysis — Part 7 of this manual
	Depress IN SERVICE button (OFF), depress TEST button on Opcon, then depress IN SERVICE button (ON) after a few seconds.	Form-out occurs (if Option 39.a. is selected), feed out occurs (if Options 18.b. and 39.b. are selected) or no feed out (if Options 18.a. and 39.b. are selected). After TEST lamp is extinguished, printer motor goes off after a delay of approximately 20 seconds. IN SERVICE lamp lights approximately 3 seconds after TEST lamp extinguishes.	
	!"#$%&'()*+,-./Ø123456789:;<=>?@ABCDEFGHIJKLMNOPQRSTUVWXYZ [\ ]^ _ (for ASCII† Type carrier) !"#$%&'()*+,-./Ø123456789:;<=>?@ABCDEFGHIJKLMNOPQRSTUVWXYZ ¬ \ | ¢ _ (for EBCDIC‡ Type carrier) Ξ Ξ #$%& Ξ Ξ Ξ * Ξ,-./Ø123456789 Ξ Ξ ◇ Ξ Ξ Ξ @ABCDEFGHIJKLMNOPQRSTUVWXYZ Ξ Ξ Ξ Ξ Ξ (for 48 character set) TYPE FONT SYMBOL (TYPICAL) Local Test Message Generated by TEST Button (Option 19.c. must be enabled.)		
10	Check printing quality.	Characters should be clearly legible and unbroken on original copy. *Note:* The TEST message does not check all printing columns.	80-Column and 132-Column Printer Analysis — Printer Manual 355

† American National Standard Code for Information Interchange
‡ Extended Binary Coded Decimal Interchange Code.

STEP	PROCEDURE	RESULTS	TROUBLE ANALYSIS
11	Raise printer cabinet cover. Set LF switch to position 2. Close cover. Depress TEST button. While printer is printing, raise cover.	 IN SERVICE lamp remains off. Repeated character set prints with double line spacing. When cover is raised, printer stops. TEST lamp extinguishes.	 80-Column and 132-Column Printer Analysis — Printer Manual 355
12	Restore setting of LF switch (or leave in position 2 if Option 20.b. required). Set Forms switch to Off (Option 39.b.). Close cabinet cover. Depress and release FORMS ADVANCE button.	 IN SERVICE lamp comes ON. Paper feeds out as long as button is depressed.	 80-Column and 132-Column Printer Analysis — Printer Manual 355
13	Tear form off below cabinet. Depress IN SERVICE button (OFF). Depress TEST button (ON).	IN SERVICE lamp extinguishes. TEST lamp lights, TEST message prints. Printing stops when end of form passes Paper-Out switch, PAPER-OUT lamp turns on and TEST lamp extinguishes.	
14	Raise cover and restore setting of Forms switch (or leave in Off position if Option 39.b. required). Close cabinet cover.		
THIS COMPLETES OFF-LINE CHECKOUT OF ROP TERMINALS W/40C303AC/003.			

9. ON-LINE CHECKOUT -- ROP TERMINALS

With the ROP properly interfaced to the system where it will be used, conduct a complete checkout of the receive capabilities taking into account all option and feature variables.

RECEIVE OPERATION CHECKOUT (40/0)

The following steps are checks for the receive operation of Model 40/0 KD Terminals equipped with PTI interface. Checkout is performed with a TSG803 Parallel Signaling Terminal Simulator.

STEP	PROCEDURE		RESULTS		TROUBLE ANALYSIS
	PTI TERMINAL	TSG803	PTI TERMINAL	TSG803	
1	Connect to TSG803 as shown on Page 131.	Set controls on TRANSMIT side of panel as shown on Page 131. TSG803 will be used as a transmitter to check receive operation of KD.			
2	Turn on power and allow warmup. Depress HOME and CLEAR.	Turn on power and allow warmup.			Refer to Set Analysis Page 195.
3	Depress REC.		REC indicator lights.	READY and NC light.	Controller For 40/0 Applications — Refer to Part 8. Opcon — Refer to Part 3. Display Monitor — Refer to Part 2.
4		Depress CA STEP repeatedly.	Alternate U and * appear on screen for each two depressions of CA STEP.	CA and NC alternately light for each depression.	
5		Depress 1200 wpm until two or three lines of U* appear on screen.	Alternate U and * appear at 1200 wpm rate.	CA and NC appear to glow steadily because of high repetition rate.	
6		Depress FREE RUN.	Segments are rapidly filled with U*.	CA and NC appear to glow steadily (until transmission ends) because of high repetition rate.	
7	Depress LOCAL. Depress HOME and CLEAR. Depress REC.	Depress SINGLE STEP. Set DATA SELECT to SWITCH.			Controller For 40/0 Applications — Refer to Part 8. Display Logic — Refer to Part 5.

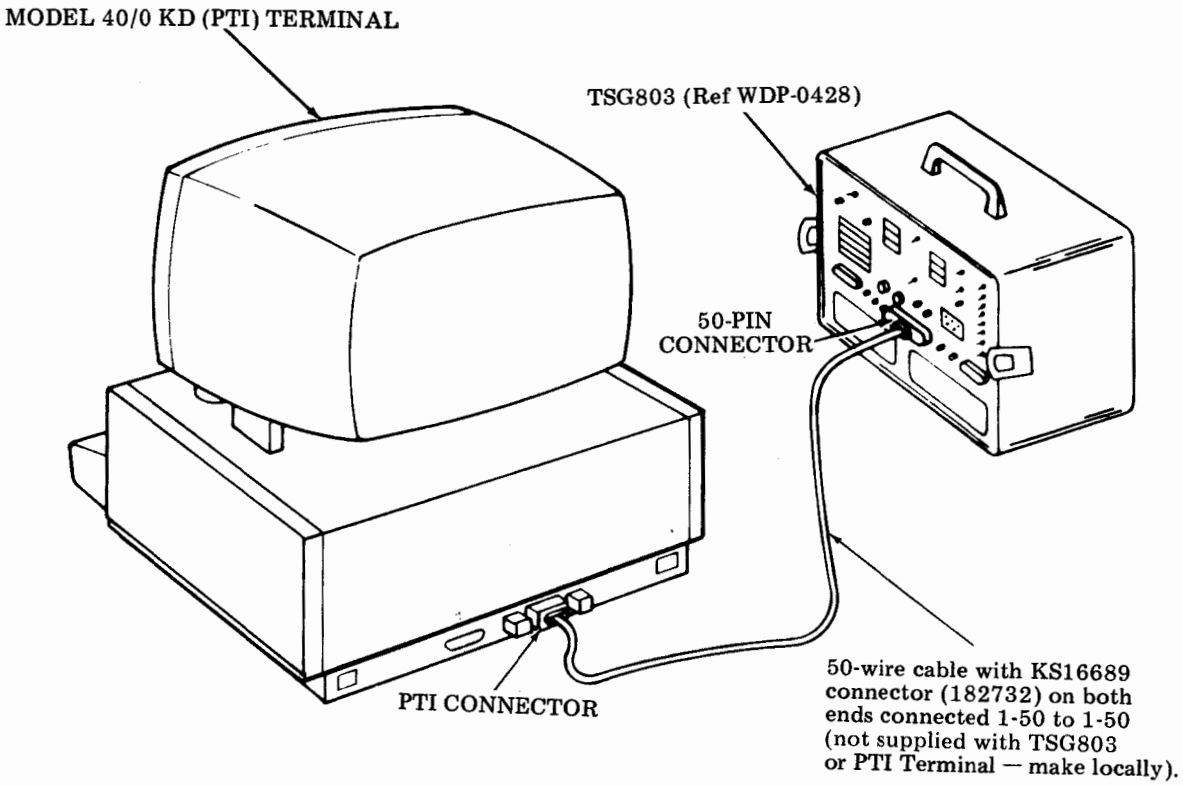

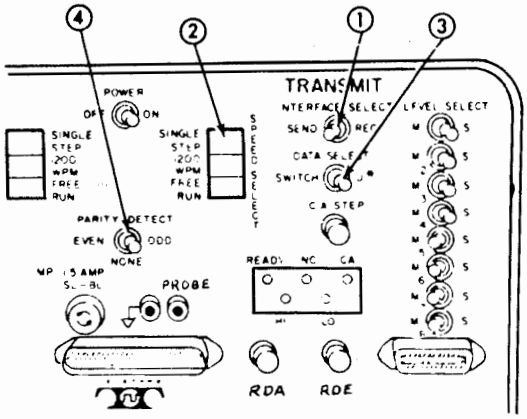

①REC (If Option 14.a. enabled)
SEND (If Option 14.b. enabled)

②SINGLE STEP

③U*

④ODD

C. TESTING (Cont)

10. RECEIVE AND SEND OPERATION CHECKOUT (40/0) (Cont)

CHART 4

CHARACTER	LEVEL SELECT SWITCH IN M POSITION	RESULTS
NULL	None	N_U displayed if Option 5.b. is enabled on 410674 Card.
CR	1348	← is displayed if Option 5.d. is enabled on 410674 Card.
DEL	All	// displayed if Option 5.f. is enabled on 410674 Card.
*	246 *Note:* This character deliberately set up with odd parity to check error response.	* displayed if Option 7.a. is enabled on 410674 Card. S_b displayed if Option 7.b. is enabled on 410674 Card.

ASCII Code Chart

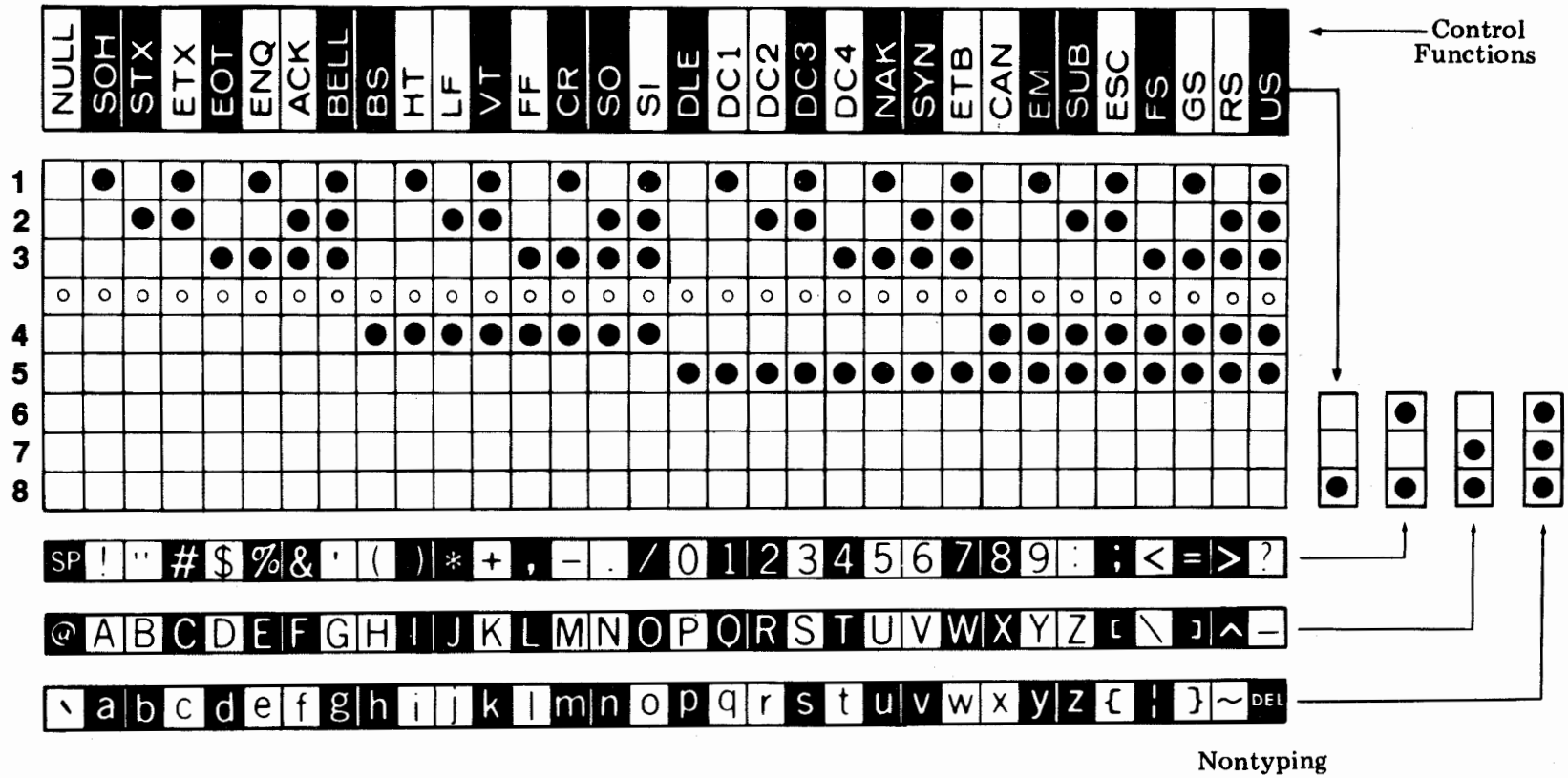

● Mark To obtain even parity, the characters and functions shown with shaded backgrounds have 8th bit marking.

Upon receiving code combinations for ` through ~ , monocase equipment displays respective characters @ through ^ .

For nonstandard character complement, replace characters as necessary (ie, for fraction characters, replace * with 1/2).

RECEIVE OPERATION CHECKOUT (40/0) (Cont)

STEP	PROCEDURE		RESULTS		TROUBLE ANALYSIS
	PTI TERMINAL	TSG803	PTI TERMINAL	TSG803	
7 (cont)		Set up characters of Chart 1 on LEVEL SELECT switches. (ASCII Code illustrated on Page 133 for convenience in setting up code characters.) Depress CA STEP twice to send each character.	Characters displayed (or not displayed) as indicated in Chart 4.	CA and NC alternately light for each depression.	
8	(Perform this step only if Option 6.b. is enabled on 410674 circuit card.)	Set up characters on LEVEL SELECT switches in order shown in Chart 5. Depress CA STEP twice to send each character. Example: To send ESC3 sequence, set up ESC character on LEVEL SELECT switches (1245). Depress CA twice. Set up 3 character (1256). Depress CA STEP twice.	Control functions performed or characters displayed as in Chart 5.	CA and NC alternately light for each depression.	Controller For 40/0 Applications — Refer to Part 8. Display Logic — Refer to Part 5.
9	(Perform this step only on PTI terminal without external mode control.)	Set up message ending characters on LEVEL SELECT switches in order shown in Chart 6.			Controller For 40/0 Applications — Refer to Part 8.

CHART 5

CHARACTER	LEVEL SELECT SWITCH IN M POSITION	RESULTS
ESC 3	1245 1256	HIGH LIGHT lights on opcon.
U	1357	Highlighted U displayed.
ESC 4	1245 3568	HIGH LIGHT off on opcon.
ESC W	1245 123578	FORM ENTER lights.
*	2468	Protected * displayed.
ESC X	1245 4578	FORM ENTER off on opcon.
*	2468	Unprotected * displayed.
ESC 1	1245 1568	Tab column displayed.
ESC 2	1245 2568	Tab column clears.
ESC 0	1245 56	Single tab displayed in cursor.
ESC B	1245 27	Cursor moves down.
ESC C	1245 1278	Cursor moves right.
ESC 7	1245 123568	Cursor moves up.
BS	48	Cursor moves left.
ESC G	1245 1237	Cursor goes to first character position of line.
ESC @	1245 78	Cursor moves to first space after protected * if checkout sequence is followed. Otherwise cursor moves to next tab mark or space after protected data or beginning of next line if unprotected.

C. TESTING (Cont)

10. RECEIVE AND SEND OPERATION CHECKOUT (40/0) (Cont)

CHART 5 (Cont)

CHARACTER	LEVEL SELECT SWITCH IN M POSITION	RESULTS
HT	14	HT mark ▶ displayed. Cursor moves to next tab mark or space after protected data or beginning of next line if protected.
ESC H	1245 47	Cursor goes home.
ESC J	1245 2478	Clears all unprotected data below and to the right of cursor.
ESC R	1245 2578	Clears all.
BELL	1238	B_L displayed; bell sounds.

CHART 6

CHARACTER	LEVEL SELECT SWITCH IN M POSITION	RESULTS
FF	34	REC off; LOCAL on.
ETX	12	REC off; LOCAL on.
GS	1345	REC off; LOCAL on.
EOT	38	REC off; LOCAL on.

RECEIVE OPERATION CHECKOUT (40/0) (Cont)

STEP	PROCEDURE		RESULTS		TROUBLE ANALYSIS
	PTI TERMINAL	TSG803	PTI TERMINAL	TSG803	
9 (cont)		Depress CA STEP twice to send each character.	REC goes out and LOCAL lights (PTI terminal reverts to local mode) for each character (factory-furnished options). *Note:* Reset PTI terminal to REC after each character.	CA and NC alternately light.	
PERFORM STEPS 10 THROUGH 21 ONLY ON PTI TERMINALS WITH EXTERNAL MODE CONTROL (Card 410678 in Position 01 of Controller)					
10	Depress LOCAL.	Set INTERFACE SELECT to SEND.	LOCAL on; REC off.		Opcon — Refer to Part 3. Controller For 40/0 Applications — Refer to Part 8.
11	Depress HOME and CLEAR. Enter a message with protected and unprotected data on monitor.		Message displayed.		
12	Depress REC.		REC on; LOCAL off.		
13		Depress RDE.	REC remains on. Cursor goes home.	READY remains lit.	
14		Place INTERFACE SELECT in REC; then back in SEND.	All unprotected data is cleared.		

RECEIVE OPERATION CHECKOUT (40/0) (Cont)

STEP	PROCEDURE		RESULTS		TROUBLE ANALYSIS
	PTI TERMINAL	TSG803	PTI TERMINAL	TSG803	
15	Depress LOCAL; then re-enter message as in Step 11.		Message displayed on monitor.		Display Monitor — Refer to Part 2. Controller For 40/0 Applications — Refer to Part 8. Display Logic — Refer to Part 5.
16	Position cursor away from home position, but ahead of protected data. Depress REC.				
17		Set up ETX (1, 2 marking) on LEVEL SELECT switches. Depress CA STEP twice to send ETX.	Ex displayed on monitor.		
18		Depress RDA.	REC goes out. All unprotected data after cursor is cleared. LOCAL lights. Cursor does not move.	READY goes out.	
19		Place INTERFACE SELECT in REC; then back in SEND.	LOCAL goes out. REC lights (mode does not change if Option 15.b. is present).		Controller For 40/0 Applications — Refer to Part 8.
20	Depress SEND.		REC goes out. SEND lights.		
21		Place INTERFACE SELECT in REC; then back in SEND.	SEND goes out. REC lights (mode does not change if Option 15.b. is present).		

THIS ENDS THE CHECKOUT OF THE RECEIVE OPERATION OF THE PTI TERMINAL. SEE FOLLOWING PAGES FOR THE SEND OPERATION CHECKOUT.

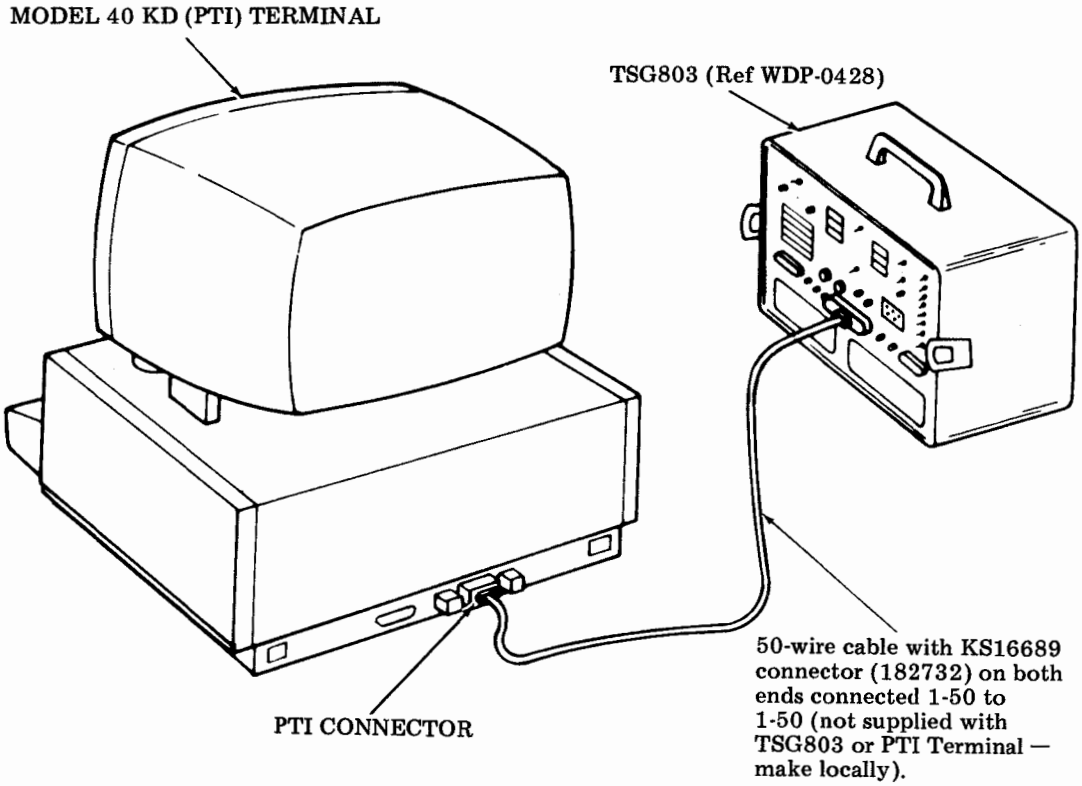

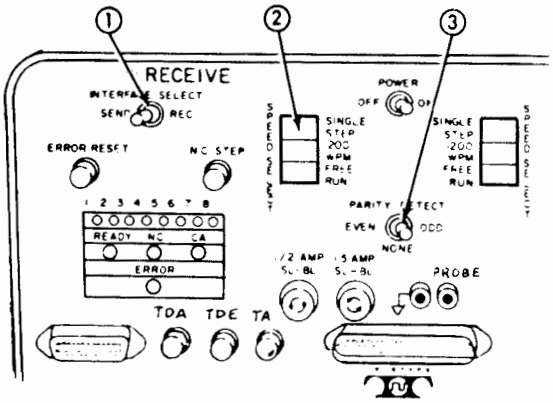

① REC

② SINGLE STEP

③ ODD

SEND OPERATION CHECKOUT (40/0)

The following steps are checks for the send operation of Model 40/0 Terminal equipped with PTI interface. Checkout is performed with a TSG803 Parallel Signaling Terminal Simulator.

STEP	PROCEDURE		RESULTS		TROUBLE ANALYSIS
	PTI TERMINAL	TSG803	PTI TERMINAL	TSG803	
1	Connect to TSG803 as shown on Page 139.	Set controls on RECEIVE side of panel as shown on Page 139. Simulator will be used as a receiver to check send operation of KD.			
2	Turn on power and allow warmup. Depress HOME and CLEAR if necessary.	Turn on power and allow warmup.			
3	With PTI terminal in LOCAL, enter a full line of alternate U and * across top of screen. Depress HOME.		Characters appear on monitor.		Opcon — Refer to Part 3. Controller For 40/0 Applications — Refer to Part 8. Display Logic — Refer to Part 5.
4	Depress SEND.		SEND indicator lights.	READY lights. 1-8 indicators are all lit (all levels marking).	
5		Depress NC STEP.		NC and CA light. Marking bits representing U (1357) are displayed on 1-8 indicators.	Controller For 40/0 Applications — Refer to Part 8. Display Logic — Refer to Part 5.

SEND OPERATION CHECKOUT (40/0) (Cont)

STEP	PROCEDURE		RESULTS		TROUBLE ANALYSIS
	PTI TERMINAL	TSG803	PTI TERMINAL	TSG803	
6		Depress NC STEP.	Cursor moves to next character position.	NC and CA go out. 1-8 indicators all light.	Controller For 40/0 Applications — Refer to Part 8. Display Logic — Refer to Part 5. Opcon — Refer to Part 3.
7		Depress NC STEP.		NC and CA light. Marking bits representing * (2468) are displayed on 1-8 indicators.	
8		Depress NC STEP repeatedly.	Cursor moves to next character position for every other depression.	NC and CA light and go out for every other depression. U and * marking bits are displayed for each two depressions separated by mark hold (1-8 indicators all lit).	
9	With PTI Terminal in LOCAL, depress HOME and CLEAR. Enter a protected U, a highlighted *, and a tab column from opcon.		Cursor goes home and display is cleared. Display appears on monitor.		
10	If Option 27.b. is present on 410675 card, depress HOME. Depress FORM SEND.		Cursor goes home. FORM SEND lights.		

C. TESTING (Cont)

10. RECEIVE AND SEND OPERATION CHECKOUT (40/0) (Cont)

CHART 7

MONITOR DISPLAY	CHARACTERS SENT	MARKING BITS ON TSG803 INDICATORS
Protected U	ESC	1245
	W	123578
	U	1357
	ESC	1245
	X	4578
Highlighted *	ESC	1245
	3	1256
	*	2468
	ESC	1245
	4	3568
Tab Mark (set)	ESC	1245
	0	56

SEND OPERATION CHECKOUT (40/0) (Cont)

STEP	PROCEDURE		RESULTS		TROUBLE ANALYSIS
	PTI TERMINAL	TSG803	PTI TERMINAL	TSG803	
10 (cont)	Depress SEND.		SEND lights. If Option 27.a. is present (410675 card), cursor automatically goes home.		
11		Depress NC STEP 24 times.	Cursor moves through character positions.	NC and CA light alternately. Marking bits are displayed for escape sequences and characters as shown in Chart 7.	Controller For 40/0 Applications — Refer to Part 8. Display Logic — Refer to Part 5. Opcon — Refer to Part 3.
12	Depress LOCAL. Depress HOME (if Option 27.b. is present). Depress (release) FORM SEND. Depress SEND.		LOCAL lights. Cursor goes home. FORM SEND goes out. SEND lights.		
13		Depress NC STEP repeatedly.	Cursor moves through character positions.	NC and CA light alternately. Characters sent (displayed on TSG803 indicators) depend on options of PTI terminal. Only the U and * should be sent if Option 13.a. or 13.b. are present on 410676 card. U will be sent as SPACE for Option 13.c. or 13.d., and as DELETE for 13.e.	

SEND OPERATION CHECKOUT (40/0) (Cont)

STEP	PROCEDURE		RESULTS		TROUBLE ANALYSIS
	PTI TERMINAL	TSG803	PTI TERMINAL	TSG803	
13 (cont)				U will not be sent if Option 13.f., g., or h. is present. ESC3 and ESC4 will be sent with * if Option 9.b. is present on 410674 card.	
14	With PTI terminal in local, depress HOME, TAB CLEAR, and CLEAR. (Clear protected U with FORM ENTER on.) Enter the following on the monitor: NEW LINE, FF, ETX, EOT, GS, and TAB (▶).		Cursor goes home and display is cleared. Display appears on monitor.		Controller For 40/0 Applications — Refer to Part 8. Display Logic — Refer to Part 5.
15	Depress HOME (if Option 27.b. is present). Depress SEND.		Cursor goes home. SEND lights.		
16		Depress NC STEP repeatedly.	Cursor moves through character positions. Mode is changed on message ending characters per selected options as in Chart 8.	NC and CA both light alternately. Characters sent (displayed on TSG803 indicators) as in Chart 8.	

CHART 8

MONITOR DISPLAY	CHARACTER SENT	MARKING BITS ON TSG803 INDICATORS	NOTES
≡	CR CR LF	1348 1348 24	New line sequence sent determined by Option 10. on 410675 Card: 10.a. sends CRLF 10.b. sends CRCRLF 10.c. sends LF.
F_F	FF	34	Effect of message ending characters determined by Options on 410674 Card: Drop out of SEND on FF (Option 8.a.), ETX (8.c.), EOT (8.e.),or GS (8.g.). Do not drop SEND on FF (8.b.), ETX (8.d.), EOT (8.f.), or GS (8.h.) (see Note).
E_X	ETX	12	
E_T	EOT	38	
GS	GS	1345	
▶	HT or Space	HT = 14 Space = 68	HT sent as HT if Options 13.a., 13.c., 13.e., 13.f., or 13.g. are programmed on 410676 Card. Sent as space if Options 13.b., 13.d., or 13.h. are enabled.

Note: If any message ending options are enabled, CA on TSG803 will not light when NC STEP is depressed after message ending character is sent. Go to LOCAL (if not already in LOCAL due to terminal action), delete message ending character from monitor display, go to SEND, and NC STEP to next character. Repeat as necessary for each message ending character that terminates transmission. PTI terminals without external mode control (no 410678 card) will go to LOCAL (Option 11.a.) or REC (Option 11.b.) after sending an enabled message ending character. Operation of terminals with external mode control (Option 11.c. present) will be checked later.

SEND OPERATION CHECKOUT (40/0) (Cont)

STEP	PROCEDURE		RESULTS		TROUBLE ANALYSIS
	PTI TERMINAL	TSG803	PTI TERMINAL	TSG803	
PERFORM STEPS 17 THROUGH 31 ONLY ON PTI TERMINALS WITH EXTERNAL MODE CONTROL (Card 410678 in Position 01 of Controller)					
17	With PTI terminal in LOCAL, enter a 10-character message ending in ETX. Depress SEND.		Characters displayed on monitor. SEND lights.		Display Monitor — Refer to Part 2. Opcon — Refer to Part 3. Controller For 40/0 Applications — Refer to Part 8.
18		Depress NC STEP until ETX is displayed on indicators.		ETX displayed as 1, 2 marking.	
19		Depress TDE momentarily.	SEND stays lit. Cursor goes home.	READY stays lit.	Controller For 40/0 Applications — Refer to Part 8. Opcon — Refer to Part 3.
20	PTI terminal still in SEND.	Depress NC STEP until ETX is displayed on indicators.		ETX displayed as 1, 2 marking.	
21		Depress TDA momentarily.	SEND goes out. REC lights if Option 16.a. present on 410678 card; LOCAL lights if Option 16.b. present. Cursor goes home if Option 16.c. present on 410678 card; cursor stays at end of message if Option 16.d. present.	READY goes out.	

SEND OPERATION CHECKOUT (40/0) (Cont)

STEP	PROCEDURE		RESULTS		TROUBLE ANALYSIS
	PTI TERMINAL	TSG803	PTI TERMINAL	TSG803	
22	With cursor HOME depress SEND.	Depress NC STEP until ETX is displayed.		READY lights. ETX displayed as 1, 2 marking.	Controller For 40/0 Applications — Refer to Part 8. Opcon — Refer to Part 3.
23		Depress TA momentarily.	SEND goes out. LOCAL indicator flashes until reset by depressing LOCAL key.	READY goes out.	
24	If REC TAPE keytop is not present (ninth position from left on control strip of operator console), remove blank keytop from this position. (Restore when test is completed.) Connect 337683 cable (supplied with TSG803) to 24-pin connector at rear of PTI terminal (Page 148). Connectors at free end of cable will be used as test points for the following steps.	Insert test leads in probe and ⏚ jacks on TSG803 panel (Refer to figure on Page 148). These leads will be used to check Device Control interface of PTI terminal.			Controller For 40/0 Applications — Refer to Part 8. Opcon — Refer to Part 3.
25	Alternately depress LOCAL and REC or SEND.	Connect probe lead of TSG803 to pin 5 of cable.		HI indicator should light when terminal is in SEND or REC. LO indicator should light when in LOCAL.	

C. TESTING (Cont)

10. RECEIVE AND SEND OPERATION CHECKOUT (40/0) (Cont)

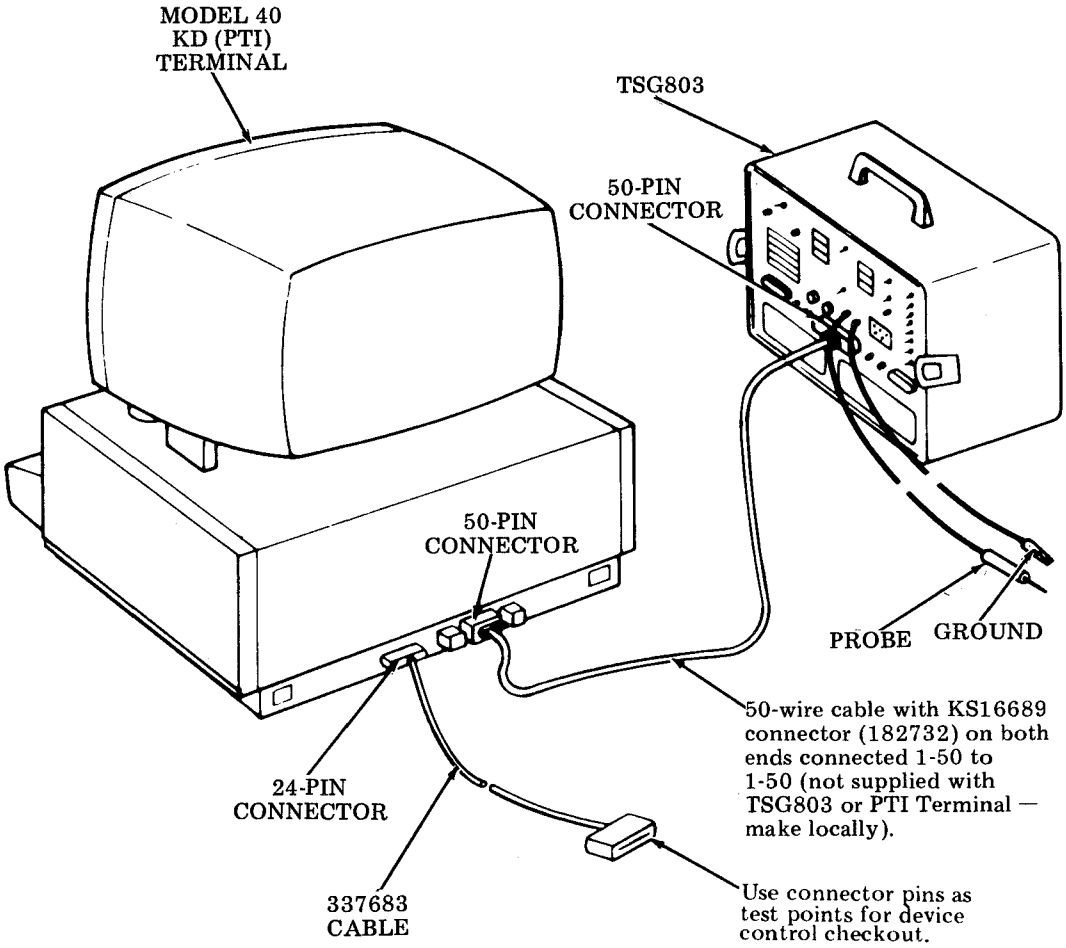

SEND OPERATION CHECKOUT (40/0) (Cont)

STEP	PROCEDURE		RESULTS		TROUBLE ANALYSIS
	PTI TERMINAL	TSG803	PTI TERMINAL	TSG803	
26		Connect ⏚ lead of TSG803 to pin 7 of cable.	Indicator in ninth position from left (REC TAPE, if present) should light.		Controller For 40/0 Applications — Refer to Part 8. Opcon — Refer to Part 3.
27	Depress REC. Touch a jumper wire between pins 5 and 9 of cable.		REC should light. REC goes out. SEND should light.		
28	Depress SEND. Touch jumper wire between pins 5 and 10 of cable.		SEND should light. SEND goes out. LOCAL should light.		
29	Depress SEND. Touch jumper wire between pins 5 and 11 of cable.		SEND should light. SEND goes out. REC should light.		
30	Depress LOCAL. Depress switch in ninth position from left (REC TAPE, if present).	Connect probe lead of TSG803 to pin 12 of cable.		HI indicator lights briefly.	

SEND OPERATION CHECKOUT (40/0) (Cont)

STEP	PROCEDURE		RESULTS		TROUBLE ANALYSIS
	PTI TERMINAL	TSG803	PTI TERMINAL	TSG803	
31	Depress REC.	Set TRANSMIT section of TSG803 to send ETX (1, 2M on LEVEL SELECT switches) to PTI terminal. Depress CA STEP twice to send character. Touch ⏚ lead momentarily to pin 20 of cable.	 E_X displayed on monitor. LOCAL should light.	 CA lights; then goes out.	Controller For 40/0 Applications — Refer to Part 8. Opcon — Refer to Part 3.
THIS ENDS THE CHECKOUT OF THE SEND OPERATION OF THE PTI TERMINAL.					

11. MODEL 40/4 MINI- AND MAXI-CLUSTER ARRANGEMENTS OFF-LINE CHECKOUT

Each KD and printer in the station must be checked using the procedure given in Steps 1 through 41 or 42 through 49, respectively. Follow these instructions before beginning the test procedures.

a. Turn on power to the set or station (LOCAL indicator lights on each opcon).
b. Turn on power to the display and adjust brightness.
c. Perform Steps 1 through 41 of the Test Procedures for KD Off-Line Checkout.
d. Perform Steps 42 through 49 for off-line checkout of each printer.

The following opcon arrangements are used with Model 40/4 Maxi-Cluster and Mini-Cluster Station arrangements.

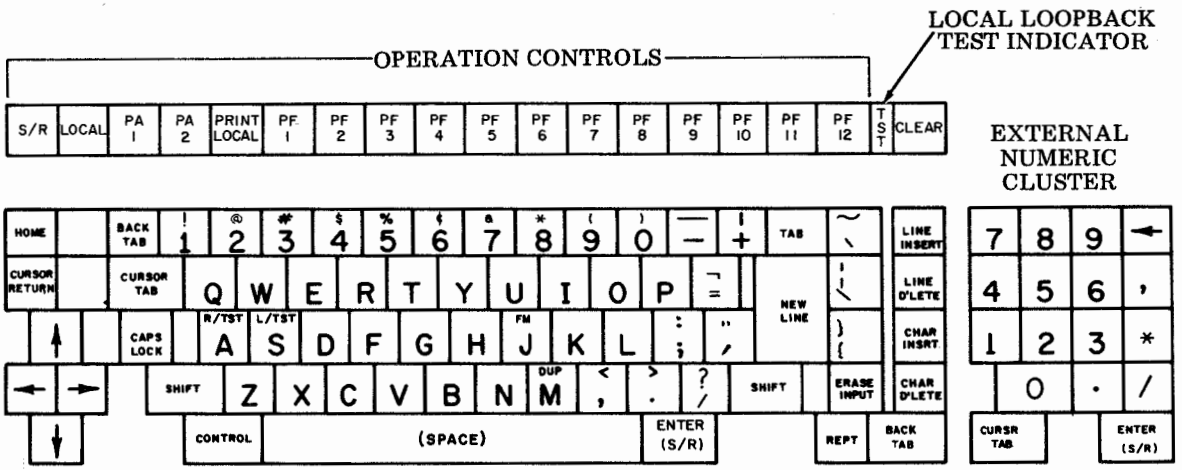

NOTE: The, (comma), *, and/keys located within the External Numeric Cluster are not functional with DCCs or MCCs which employ PROM and early EPROM version circuit cards and, therefore, may be covered with blocking keys.

40K203/GAB Keytop Layout

C. TESTING (Cont)

11. MODEL 40/4 MINI- AND MAXI-CLUSTER ARRANGEMENTS OFF-LINE CHECKOUT (Cont)

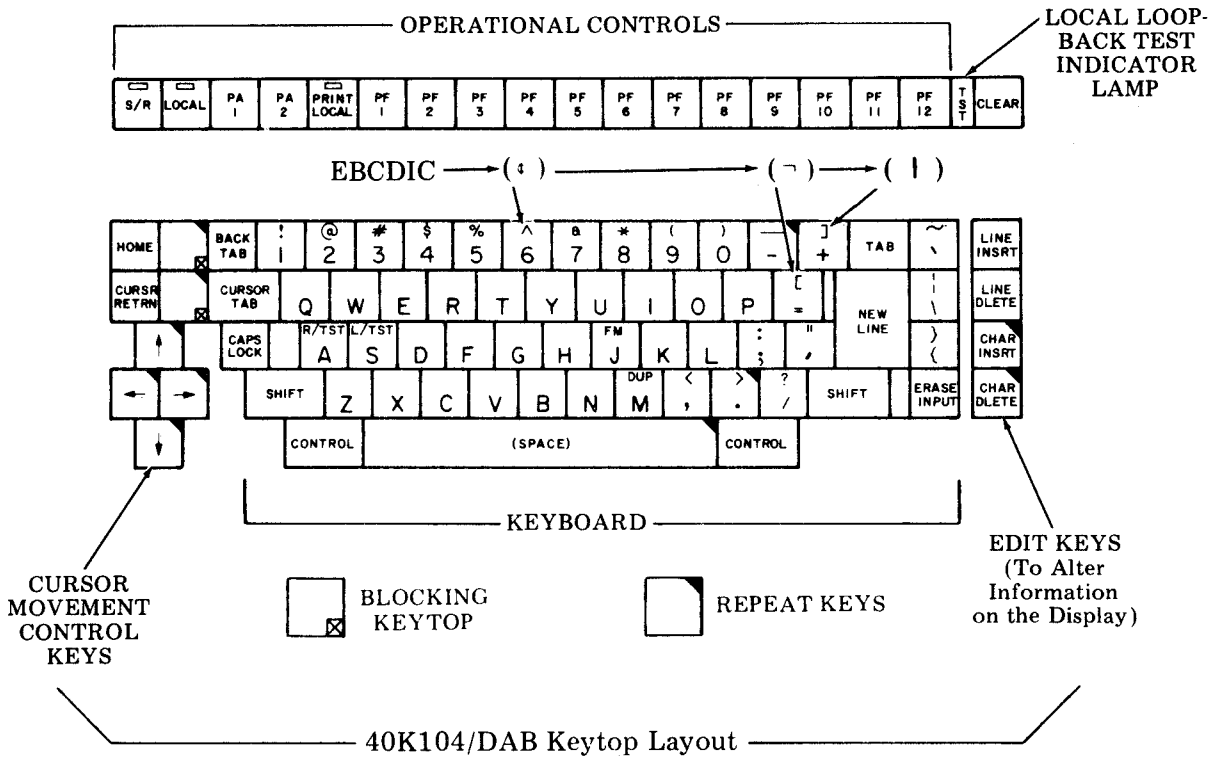

40K104/DAB Keytop Layout

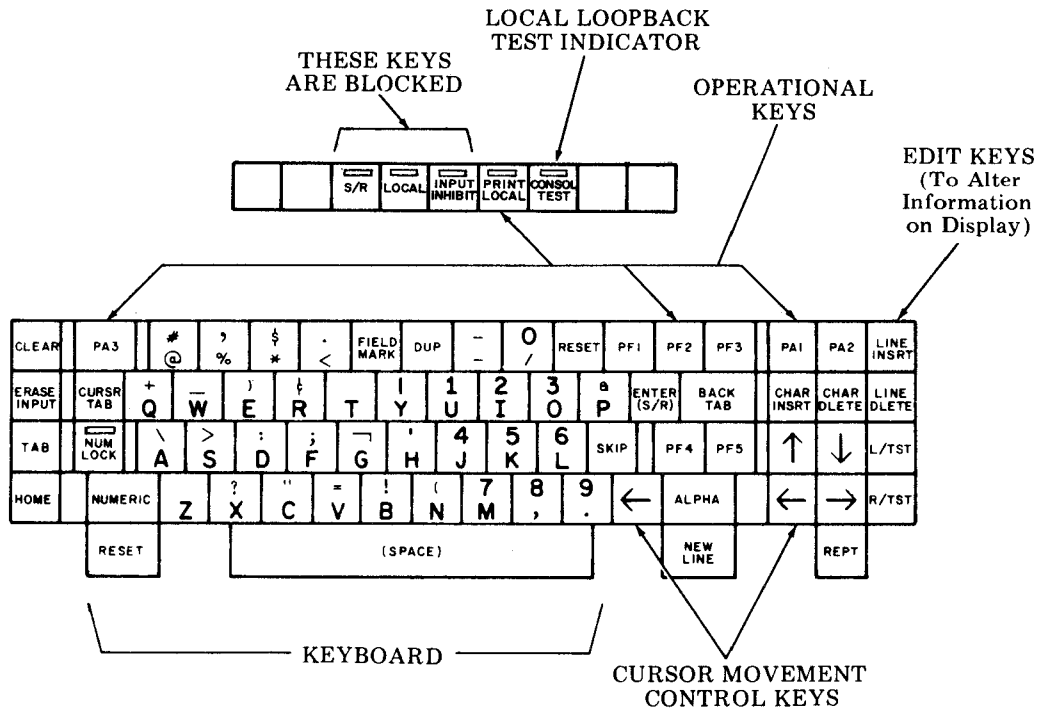

NOTE: The only locking keytop is NUM LOCK, depress to set (lights), depress to release (light goes out).

40K105/CAA Keytop Layout

KD LOCAL TEST PROCEDURES

STEP	PROCEDURE	RESULTS	TROUBLE ANALYSIS
	Note: Start with Step 1 if any KD of the station has typewriter style opcon. Start with Step 21 if KD has an internal numeric cluster style opcon. Start with Step 42 for printers.		
1	a. Place typewriter style opcon into the Caps mode by depressing and latching the CAPS LOCK key. (Opcons with no CAPS LOCK key require no action.)		
	b. At each KD: • Observe that the raster is barely present when brightness control is turned up fully. • When cursor is in home position, it is approximately 1/2 inch from left side of display. • Enter a line of Es at top and bottom of display, then HOME cursor. Requirements are met.	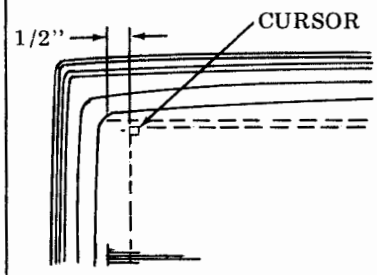	• If raster is not present, refer to Part 2. • If a requirement is not met, refer to adjustments of monitor in Part 2. • If E cannot be entered, refer to Part 3.
	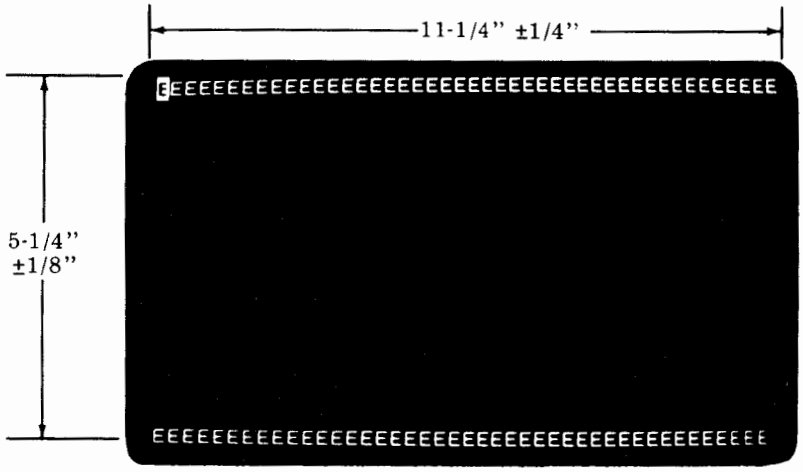 11-1/4" ±1/4" 5-1/4" ±1/8" EEEE

C. TESTING (Cont)

11. MODEL 40/4 MINI- AND MAXI-CLUSTER ARRANGEMENTS OFF-LINE CHECKOUT (Cont)

KD LOCAL TEST PROCEDURES (Cont)

STEP	PROCEDURE	RESULTS	TROUBLE ANALYSIS
2	Home the cursor and depress a few keys on the keyboard portion of the opcon.	*Note:* Each keytop need not be checked except for a trouble call. Each keytop shall function each time it is depressed.	
3	Disengage the CAPS LOCK key by depressing it again momentarily. Again depress a couple of keys on the keyboard portion of the opcon. (Opcons with no CAPS LOCK key require no action; go to Step 4.)	The alpha characters described in Step 2 are displayed in lower case (ie, abcdef, etc).	

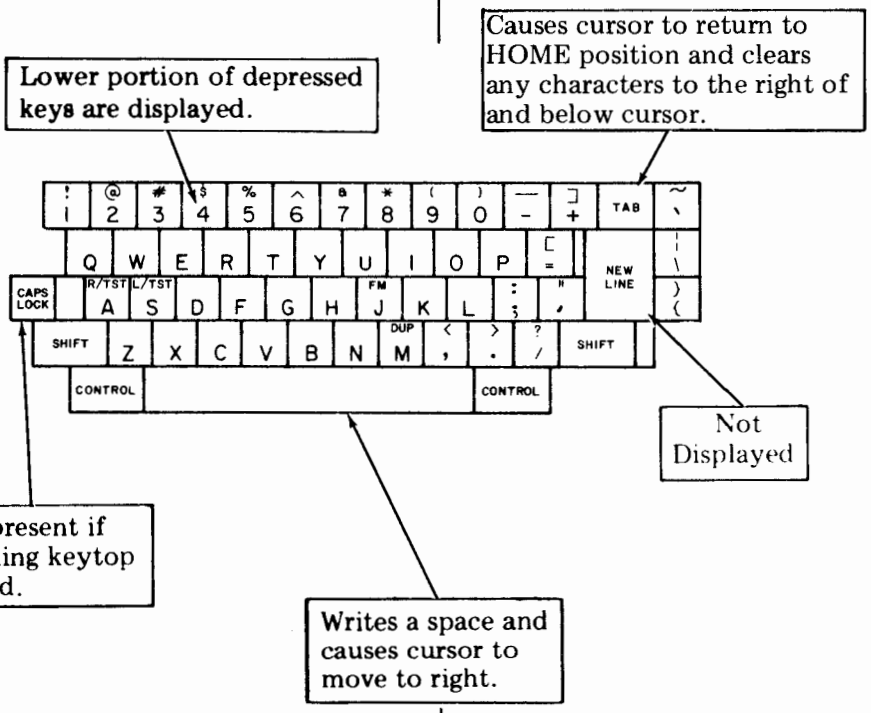

STEP	PROCEDURE	RESULTS	TROUBLE ANALYSIS
4	Depress the left then the right [SHIFT] key while depressing and checking operation of one of the following alpha keys (ie, !@#$, etc).	Upper portion of the depressed keys are displayed.	
5	Depress the [CONTROL] key together with the [FM J] key; then depress the [CONTROL] key together with the [DUP M] key.	See Note following Step 5.	

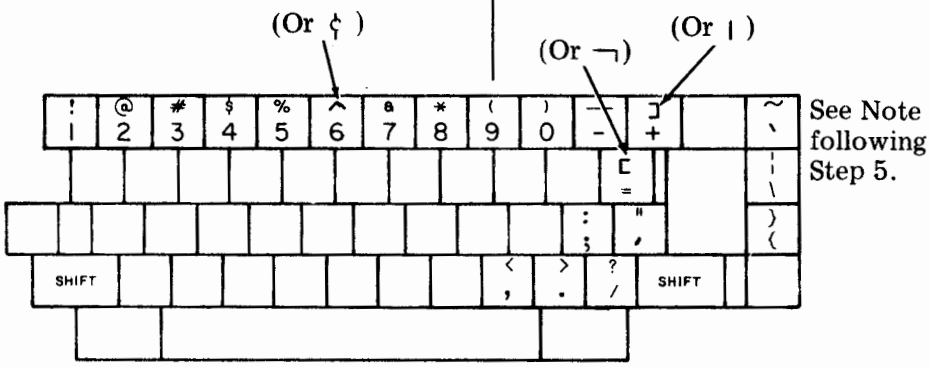

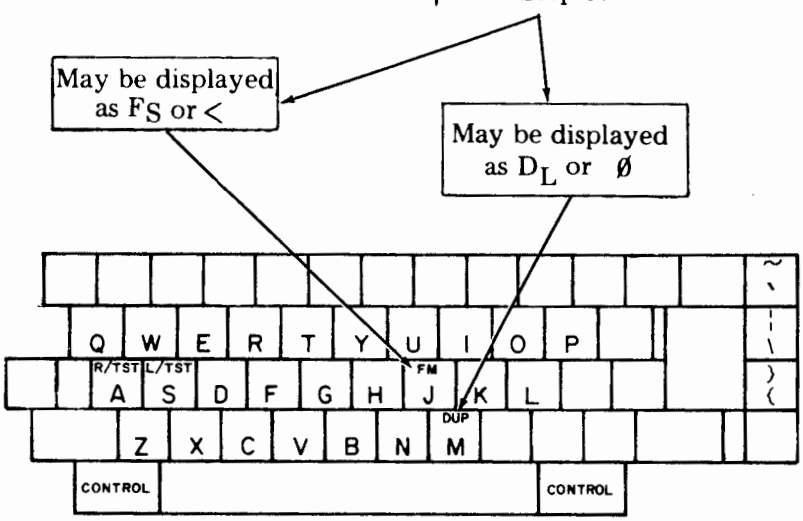

C. TESTING (Cont)

11. MODEL 40/4 MINI- AND MAXI-CLUSTER ARRANGEMENTS OFF-LINE CHECKOUT (Cont)

KD LOCAL TEST PROCEDURES (Cont)

STEP	PROCEDURE	RESULTS	TROUBLE ANALYSIS

Note: Some characters may not be displayed or may be displayed as a character other than the character received on-line or entered from the opcon. See the table below which also provides printer actions for applicable characters.

Type of 40K104 Opcon or 40K203 Opcon		ASCII or EBCDIC					ASCII			EBCDIC			ASCII or EBCDIC	
Character Received From LCU or Entered on 40K104 or 40K203 Type Opcon		~	\	¦	{	}	^	]	[	¢	|	¬	DUP	FM
Character Displayed Using D I/O:	410431 ASCII UP-LO	~	\	¦	{	}	^	]	[	^	]	[	DL	FS
	410434 ASCII MONO	^	@	\	|	]	^	]	[	^	]	[	Ø	<
	410435 EBCDIC UP-LO	~	\	¦	{	}	¢	|	¬	¢	|	¬	DL	FS
	410436 EBCDIC MONO	¢	@	\	¬	|	¢	|	¬	¢	|	¬	Ø	<
Character Printed Using Type Carrier:	400629 80C ASCII UP-LO	~	\	¦	{	}	^	]	[	^	]	[	SP	SP
	400645 80C ASCII MONO	^	@	\	[	]	^	]	[	^	]	[	SP	SP
	400777 132C ASCII UP-LO	~	\	¦	{	}	^	]	[	^	]	[	SP	SP
	400780 132C ASCII MONO	^	@	\	[	]	^	]	[	^	]	[	SP	SP
	400783 132C EBCDIC UP-LO	~	\	¦	{	}	¢	|	¬	¢	|	¬	SP	SP
	400784 80C EBCDIC UP-LO	~	\	¦	{	}	¢	|	¬	¢	|	¬	SP	SP
	400785 80C EBCDIC MONO	¢	@	\	¬	|	¢	|	¬	¢	|	¬	SP	SP
	400887 132C EBCDIC MONO	¢	@	\	¬	|	¢	|	¬	¢	|	¬	SP	SP

LEGEND:

◥ Will print with fold-over option in printer enabled. Error symbol will print if fold-over option is not enabled.

Note: Ø is displayed as 0 but printed as Ø.

STEP	PROCEDURE	RESULTS	TROUBLE ANALYSIS
6	Depress one of the following keys with additional force, [-] [>] [(SPACE)]	The space key repeatedly moves the cursor.	
7	Depress the [HOME] key. Then in sequence depress momentarily with more force than normally required, each cursor movement key shown. 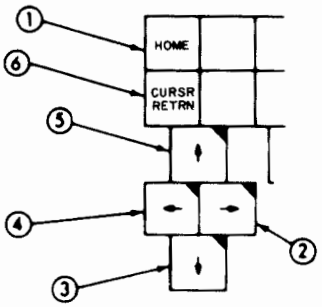 	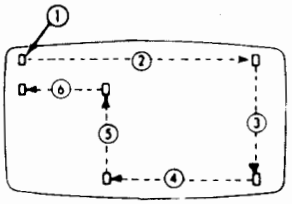 *Note:* In local opcon operation, attempts to move the cursor off the display will result as shown: 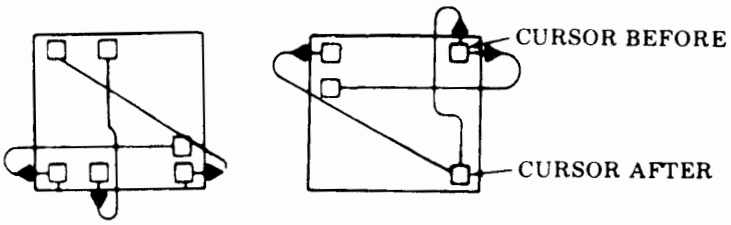 	
8	Depress ERASE INPUT key.	Display clears and cursor goes to home position. LOCAL indicator remains lit.	
9	Type the alpha characters A through J on the display. Place the cursor over the character E and depress the [CHAR INSRT] key once, then depress it fully — releasing it after the characters move to the next line.	① ABCD[E]FGHIJ ② ABCD[ ]EFGHIJ ③ ABCD[ ] EFGHIJ *Note:* CHAR INSRT and CHAR DLETE affect all 24 lines on a DCC KD. CHAR INSRT and CHAR DLETE affect only 4 lines including the line with the cursor on MCC KD. Characters move slowly.	

C. TESTING (Cont)

11. MODEL 40/4 MINI- AND MAXI-CLUSTER ARRANGEMENTS OFF-LINE CHECKOUT (Cont)

KD LOCAL TEST PROCEDURES (Cont)

STEP	PROCEDURE	RESULTS	TROUBLE ANALYSIS
10	Depress the [CHAR DLETE] key momentarily, then depress it fully.	ABCD [ ] EFGHIJ ABCD [E] FGHIJ Characters delete one at a time or repeatedly when key is held depressed. See Note in Step 9.	
11	Depress the [LINE INSRT] key three times.	The cursor remains at its present location, and the line of data moves down three lines.	
12	Depress the [LINE DLETE] key once, then depress it fully.	The line of data moves up one line, then stops on the first line.	
13	Depress [PRINT LOCAL] key, (if printer is not provided, go to Step 14).	LOCAL indicator extinguishes, PRINT LOCAL indicator lights and then goes off when printer buffer receives the message; LOCAL indicator lights. Printer copies entire display (24 lines): Monocase Printer — All display characters print as capitals. Up-Low Printer — All characters are copied as displayed.	• Flashing PRINT LOCAL indicator indicates printer: a. is not print local. b. cabinet lid open. c. form-out or paper-out condition. d. printer ac power is off. e. defective printer cable.
14	Place the cursor away from home position and depress the [CURSOR TAB] key.	The cursor returns to home position. *Note:* Displayed data is not affected by CURSOR TAB and BACK TAB keys.	
15	Place the cursor away from home position and depress the [BACK TAB] key.	The cursor returns to home position.	
16	Place the cursor away from home position and depress the [TAB] key.	Cursor returns to home position. Any characters to the right of and below cursor will be cleared.	

KD LOCAL TEST PROCEDURES (Cont)

STEP	PROCEDURE	RESULTS	TROUBLE ANALYSIS
17	Type some text on the opcon and then depress [S/R] Attempt to type some text on the opcon.	Text is displayed. LOCAL indicator extinguishes when S/R is depressed. Attention bell sounds each time a key is depressed.	
18	Alternately depress LOCAL then depress [PA 1] key, then [LOCAL] key and [PF 2], [PF 1], [PF 2] through [PF 12], [R/TST] and [CLEAR] keys in the same manner.	[LOCAL] is lit and extinguishes when a key is depressed (same for each key). Data on display remains unchanged, except when CLEAR key is depressed; all data clears from display and cursor goes to home position.	
19	This step applies only to monocase opcons (blocking keytop over CAPS LOCK position).		
	a. Depress ERASE INPUT and QUOTES keys together with additional force.	TST indicator lights and remains lit.	Refer to Part 3.
	b. Depress A (do <u>not</u> depress SHIFT).	S/R key lights.	•Remove blocking keytop, check that plunger is in lower position. •Replace opcon.
	c. Depress ERASE INPUT and P keys together with additional force.	TST indicator light goes out.	Refer to Part 3.
20	When all typewriter style opcons have successfully passed these tests: a. Go to Step 21 if an internal numeric cluster style opcon is part of the station. b. Go to 12. <u>MODEL 40/4 ON-LINE TESTING</u> if <u>no</u> internal numeric cluster style opcon is part of the station.		
	<u>INTERNAL NUMERIC CLUSTER STYLE OPCON (Steps 21 through 41)</u>		
21	a. Perform Step 1b.	Results and Trouble Analysis of 1b apply.	
	b. Place internal numeric cluster style opcon into the NUM LOCK mode by depressing and latching the NUM LOCK key.	The indicator lights.	

C. TESTING (Cont)

11. MODEL 40/4 MINI- AND MAXI-CLUSTER ARRANGEMENTS OFF-LINE CHECKOUT (Cont)

KD LOCAL TEST PROCEDURES (Cont)

STEP	PROCEDURE	RESULTS	TROUBLE ANALYSIS
22	Home the cursor and depress a few keys on the keyboard portion of the opcon.		
23	Hold down the [ALPHA] key while depressing an alphanumeric key (ie, A, B, C, etc).	The corresponding alpha character (ie, A, B, C, etc) is displayed.	
24	Disengage the [NUM LOCK] key by depressing it again momentarily. The indicator light goes out. Depress a couple of keys (ie, A, B, C, D, etc) on the keyboard portion of the opcon.	 The alpha characters shown in the figure of Step 22 (lower portion of keytops) are displayed (ie, A, B, C, D, etc).	

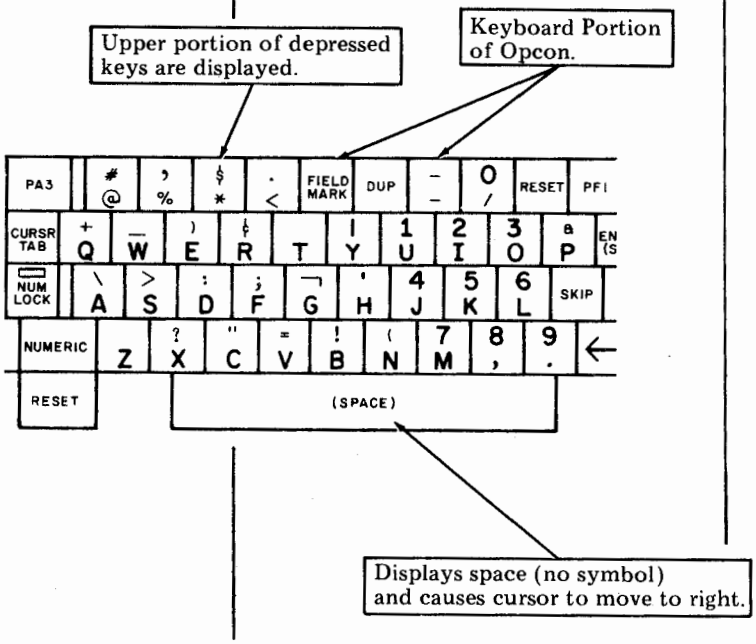

Note 1: Each key need not be checked except for a trouble call. Each should function each time it is depressed. Depressing [Z] or [T] will display space (no symbol) and cause cursor to move to right.

Note 2: TAB causes cursor to move to home position.

Note 3: If Option 407.a. is installed in SCC (or MCC), NUMERIC key must be depressed (or NUM LOCK indicator lit) to enter characters outside the numeric cluster (keys in cluster are marked: [ ]).

STEP	PROCEDURE	RESULTS	TROUBLE ANALYSIS
25	Hold down the [NUMERIC] key while depressing and checking operation of one of the following alpha keys: (#, +, \, etc.).	Upper portion of depressed keys is displayed.	
26	Depress the [FIELD MARK] key, then depress the [DUP] key.	FIELD MARK is displayed as < DUP is displayed as Ø.	
27	Fully depress the [(SPACE)] key.	The space key repeatedly moves the cursor.	
28	Hold down the [REPT] key while depressing any alphanumeric key.	The alphanumeric character is repeated.	
29	① Depress [HOME] key. ② Depress † [→] key. ③ Depress † [↓] key. ④ and ⑥ Depress† [←] key. (Try both [←] keys.) ⑤ Depress ‡ [↑] key. †With more force than normally required. *Note:* There is no CURSR RTRN key on this opcon.	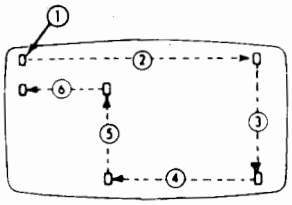 *Note:* In local opcon operation, attempts to move the cursor off the display will result as shown: 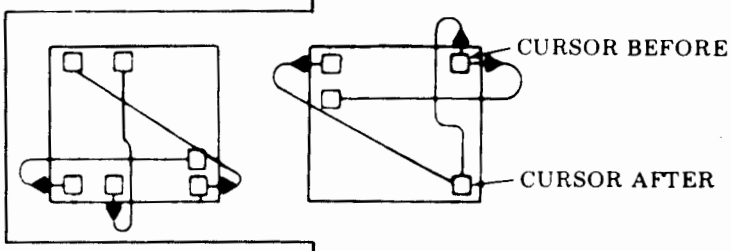 	

C. TESTING (Cont)

11. MODEL 40/4 MINI- AND MAXI-CLUSTER ARRANGEMENTS OFF-LINE CHECKOUT (Cont)

KD LOCAL TEST PROCEDURES (Cont)

STEP	PROCEDURE	RESULTS	TROUBLE ANALYSIS
30	Depress ERASE INPUT key.	Display clears and cursor goes to home position. LOCAL indicator remains lit.	
31	Type the alpha characters A through J on the display. Place the cursor over the character E and depress the CHAR INSRT key once, then also depress REPT key — releasing both after the characters move to the next line.	① ABCD[E]FGHIJ ② ABCD[ ]EFGHIJ ③ ABCD[ ] EFGHIJ *Note:* CHAR INSRT and CHAR DLETE affect all 24 lines on a DCC KD. CHAR INSRT and CHAR DLETE affect only 4 lines including the line with the cursor on MCC KD. Characters move slowly.	
32	Depress the CHAR DLETE key momentarily.	ABCD [ ] EFGHIJ ABCD [ ] EFGHIJ Characters EFGHIJ move one position to the left as shown.	
33	Depress the LINE INSRT key three times.	The cursor remains at its present location, and the line of data moves down three lines.	
34	Depress the LINE DLETE key once.	The line of data moves up one line.	
35	Depress PRINT LOCAL key, (if printer is not provided, go to Step 36).	LOCAL indicator extinguishes, PRINT LOCAL indicator lights and then goes off when printer buffer receives the message; LOCAL indicator lights. Printer copies entire display (24 lines).	• Flashing PRINT LOCAL indicator indicates printer: a. is not print local. b. cabinet lid is open. c. is in form-out or paper-out condition. d. ac power is off. e. defective or miswired cable.
36	Place the cursor away from home position and depress the CURSR TAB key. Repeat Step 36 but depress the SKIP key.	The cursor returns to home position. *Note:* Displayed data is not affected by CURSOR TAB, SKIP and BACK TAB keys.	

STEP	PROCEDURE	RESULTS	TROUBLE ANALYSIS
37	Place the cursor away from home position and depress the [BACK TAB] key.	The cursor returns to home position.	
38	Place the cursor away from home position and depress the [TAB] key.	Cursor returns to home position. Any characters to the right of and below cursor will be cleared.	
39	Type some text on the opcon and then depress [ENTER (S/R)]	Text is displayed. When ENTER key is depressed, LOCAL indicator extinguishes, INPUT INHIBIT indicator lights.	
40	Type some text on the keyboard portion of the opcon.	Attention bell sounds each time a key is depressed. No more text is displayed. *Note:* The audible alarm control on the opcon should be adjusted to allow bell to be heard.	
41	Alternately depress [RESET] (next to PF1) then depress [PA 1] key, then [RESET] key and [PA 2], [PF 3], [PF 1] through [PF 5] and [CLEAR] keys in the same manner. Depress [RESET] key, then depress [ALPHA] key at the same time as [R/TST] key. Depress [RESET] key (next to NUMERIC key). *Note:* The PF6 through PF12 are not present on this opcon.	[LOCAL] is lit and extinguishes when PA1 key is depressed (same for each key). Data on display remains unchanged, except when CLEAR key is depressed; all data clears from display and cursor goes to home position.	

When all KDs and printers in the station have successfully completed these test, proceed to 12. MODEL 40/4 ON-LINE TESTING.

C. TESTING (Cont)

11. MODEL 40/4 MINI- AND MAXI-CLUSTER ARRANGEMENTS OFF-LINE CHECKOUT (Cont)

STEP	PROCEDURE	RESULTS	TROUBLE ANALYSIS
42	Preliminary requirements of printer: a. Ribbon and paper loaded. b. Switches (top right or left of printer, cabinet cover raised). LF-1 Test-Off Forms (Tractor Feed Only) — On c. Cabinet cover closed and ac power switched ON.	Printer motor is off. *Note:* Fan in tractor feed printer cabinet must be ON (air flows).	Manual 355, Printer Analysis
43	Momentarily depress PAPER button (red) on cover of printer cabinet.	Paper feeds out as long as button is depressed.	•Check for: a. Printer cable not connected. b. Printer cable defective or miswired. c. Defective 410406 circuit card (DCC, MCC). Manual 355, Printer Analysis *Note:* Continuous feedout will occur if form selector lever not fully seated in slot 1, 2, 3 or 4.
44	TRACTOR FEED PRINTER ONLY: Depress and release FORMS ADVANCE button (black) on printer cabinet cover. (See Note in Trouble Analysis column.)	Paper feeds out until first line of next form is reached, then stops. *Note:* See chart on top of printer to determine the correct form-out selection.	
45	Unlatch and raise printer cabinet cover.	None	
46	Raise cover interlock switch to maintenance position.	None	
47	Set test switch to ON, allow printer to print several lines, then turn test switch OFF. *Note:* On printers which have later version 410071, 410072 and 410076 circuit cards, the font identification symbol will not be printed in the columns margined per Option 17.	Printer turns on and prints font identification symbol repeatedly in all columns until switch is turned off. (See Note.) See Manual 355 for font ID symbols.	Manual 355, Printer Analysis

STEP	PROCEDURE	RESULTS	TROUBLE ANALYSIS
48	FRICTION FEED PRINTER: Lift paper roll to simulate a paper alarm. Lower paper roll, guide paper through window, and close cabinet cover. TRACTOR FEED PRINTER: Tear off next form at perforations under pedestal top, then depress PAPER button on cabinet top until last form passes through printer. Reload forms, guide first form through window, and close cabinet cover.	PAPER indicator lights. PAPER indicator goes out. 80-Column Printer With 410640 Circuit Card — PAPER indicator lights and printer motor turns off. 80-Column Printers With 410076 or 410071 Circuit Cards And All 132-Column Printers — If Option 48.a. is selected, PAPER indicator lights and printer motor turns off when last form is partly through printer. If Option 48.b. is selected, PAPER indicator does not light and printer motor does not turn off until form is completely out of printer and end of form contact is sensed. PAPER indicator goes out.	Manual 355, Printer Analysis
49	Type some text on the display (lower case and capitals if possible) and then depress PRINT LOCAL key.	LOCAL indicator extinguishes and PRINT LOCAL indicator lights and then goes off when printer buffer receives the message; LOCAL indicator lights. Printer copies entire display (24 lines): Monocase Printer — All display characters print as capitals. Up-Low Printer — All display characters are copied as displayed. *Note 1:* Friction feed printer may or may not feed out 16 lines of paper before turning off, depending on Option 18. Tractor feed printer may or may not form feed before turning off depending on Options 18. and 39.	• Flashing PRINT LOCAL indicator indicates: a. Printer cabinet lid open. b. Form or paper-out condition. c. Printer ac power is off. d. Printer is not print local to the KD. e. Printer cable defective or miswired. Manual 355, Printer Analysis Option 18.c. not installed in monocase printer. Character set of type carrier in printer does not match Option 19.

C. TESTING (Cont)

11. MODEL 40/4 MINI- AND MAXI-CLUSTER ARRANGEMENTS OFF-LINE CHECKOUT (Cont)

STEP	PROCEDURE	RESULTS	TROUBLE ANALYSIS
49 (Cont)		*Note 2:* After printer is finished copying, the motor will remain on for approximately 10 seconds before turning off. Later version printer circuit cards will allow printer motor to remain on for 40 seconds or indefinitely, depending on Option 58.	Option 19.c. not installed in printer. Manual 355, Printer Analysis

When all KDs and printers in the station have successfully completed these tests, proceed to 12. MODEL 40/4 ON-LINE TESTING.

12. MODEL 40/4 ON-LINE TESTING

Three test methods are required for stations having either ASCII (410408), EBCDIC (410409), or ASCII/EBCDIC (410411) communications interface unit circuit cards. The order of testing is:

a. Near-End Analog Loopback Test
b. Far-End Digital Loopback Test
c. In-Service Operation Test

Near-End Analog Loopback Test

The Near-End Analog Loopback Test provides a craftsperson with a local test method to check station and data set operation prior to requesting an End-to-End Installation Test or prior to doing "in service operation acceptance" test with the customer's equipment. This test must be performed one time before continuing testing. Some data sets cannot perform this test.

Not all data sets are capable of the Near-End Analog Loopback Test. If this test can be made, first perform the following:

a. Turn off ac power to the SCC (or MCC).
b. Remove the 410403 or 410411 circuit card from the SCC or MCC controller of the station. At coordinates A13 on the 410403 circuit card, place switches 7 and 8 to the ON position. At B3 on the 410411 circuit card, place switches 7 and 8 to the ON position.
c. Reinstall the 410403 or 410411 circuit card into the controller.
d. Turn all ac power to ON position.
e. Enable data set for Analog Loopback Test.
f. Perform local tests using the same test routine given in Part 6, CONTROLLER LOGIC, for Model 40/4 KD/Controller Local Test Procedures. The test occurs when S/R or ENTER key is depressed. Perform test on one KD only.
g. If test is not successfully completed, the 410408, 410409 or 410411 circuit card, data set or data set cable is at fault. If test is successfully completed, perform the Digital Loopback Test as instructed below.
h. Disenable Analog Loopback Test at data set.

CAUTION: DO NOT DISENABLE DATA SET FROM ANALOG LOOPBACK DURING THIS TEST. IF DISENABLED WHILE SWITCHES A13-7 AND A13-8 OF 410403 (OR B3-7 AND B3-8 OF 410411) ARE IN ON POSITION, DATA SENT BY S/R OR ENTER KEY DEPRESSION CAN BE SENT INTO THE CUSTOMER'S DATA SYSTEM DURING THE TEST; ANY DATA OPERATIONS OCCURRING AT THAT TIME WOULD BE SCRAMBLED.

Far-End Digital Loopback Test

A Far-End Digital Loopback Test can be performed if the customer is willing to permit execution of the test. If a multistation arrangement shares the same data communications circuit, all communications on that circuit must cease during the test period. This test checks the output of the data set (near end), the send and receive private line channel, and the distant end data set.

CAUTION: DO NOT PERFORM THE DIGITAL LOOPBACK TEST IF THE CUSTOMER DATA CHANNEL IS ON THE SAME CIRCUIT WITH OTHER STATIONS WHICH ARE ACTIVELY SENDING OR RECEIVING DATA. IF THIS TEST IS PERFORMED ON AN ACTIVE CIRCUIT, DATA TRANSMISSIONS ON THAT CIRCUIT WILL BE SCRAMBLED AND POSSIBLY HALT THE DATA SYSTEM OPERATION. BEFORE TESTING, REQUEST PERMISSION FROM CUSTOMER.

Perform the following:

a. If not done so already, disenable local data set from Analog Loopback Test.
b. Perform the steps outlined above in Near-End Analog Loopback Test a., b., and c.
c. Have attendant at remote end enable Digital Loopback Test on remote data set.
d. Perform step outlined above in Near-End Analog Loopback Test f.

Before attempting End-to-End Installation Test or restoring the station to service, follow a. through d. below.

a. Turn off ac power to SCC or MCC controller.
b. Remove 410403 (or 410411) circuit card from MCC or SCC controller. Place switches A13-7 and A13-8 (or B3-7 and B3-8) to OFF position.
c. Restore card. Restore power.
d. Inform far-end attendant to disenable remote data set from Digital Loopback Test.

In Service Operation Test

An In-Service Operation Test should be performed by observing the following:

a. Check that printer responses comply with desired printer options.
b. Check for correctness of display and station options.

NOTE: A KD device having D I/O 410434 or 410436 circuit cards (monocase display) will display an asterisk (*) in place of the NEW LINE symbol (≡).

C. TESTING (Cont)

13. SINGLE DISPLAY ARRANGEMENTS OFF-LINE CHECKOUT (40/4)

The Controller Self-Test should be performed. The test requires the use of the appropriate Controller Arrangement Form (copies are shown on Page 82).

Check that all circuit cards and cable connectors are fully connected (seated) then perform the Controller Self-Test below.

WARNING: THE AC POWER MUST BE OFF BEFORE REMOVING OR REPLACING A CIRCUIT CARD.

STEP	PROCEDURE	CORRECT RESPONSE	ANALYSIS
1	Connect ac cable(s) from cabinet(s) to power source. Turn on cabinet power switch(es).	All power supply votage lamps light.	40PSU101, see Power Supply Analysis.
2	Depress and hold down Self-Test switch on 410251 circuit card for at least four seconds or until one lamp goes out. (TS1 on Page 191)	All three indicators (pattern lamps) on 410251 circuit card light while switch is depressed.	•40PSU101, see Power Supply Analysis. •410251 •410261 •Refer to Station Analysis, Step 2.
3	Release Self-Test switch.	Pattern lamps may flicker during this step. After a short time, the pattern lamps should blink sequentially. *Note:* If switch is not held down long enough, the option menu will appear. Reset by depressing LOCAL or RESET key and repeat Step 2.	If a light pattern (shown on controller arrangement form) appears and remains; power down, replace indicated card, power up and retest. If the indicated card is replaced and the problem remains; refer to Station Analysis, Step 3.
4	When the pattern lamps blink sequentially, check the display on the monitor. Also, check that the cursor moves through the whole display.	See Self-Test mode displays. The ASCII* pattern is displayed for about 30 seconds, then the EBCDIC† pattern is displayed for about 30 seconds, then the controller will return to the normal operating mode. *Note:* Depress switch and rotate it 1/4 turn clockwise to retain the Self-Test mode display (actually the self-test runs and the display cycles through ASCII followed by EBCDIC repeatedly). Depress switch and rotate it 1/4 turn counterclockwise to end test. Normal operation returns after the EBCDIC display.	•Monitor support cabinet ac switch off. •Monitor power switch off (turn counterclockwise for on). •Monitor brightness low (turn counterclockwise for on). •410286 circuit card. • 410287 circuit card. • Monitor cable.

*American National Standard Code for Information Interchange.
†Extended Binary Coded Decimal Interchange Code.

ASCII Pattern

Normal Intensity

```
SH SX EX ET EQ AK BL BS ▶ ≡ VT FF ← SO SI DL D1 D2 D3 D4 NK SY EB CN EM SB EC FS GS RS US
 ! " # $ % & ' ( ) * + , - . / 0 1 2 3 4 5 6 7 8 9 : ; < = > ?
@ A B C D E F G H I J K L M N O P Q R S T U V W X Y Z [ \ ] ^ _
` a b c d e f g h i j k l m n o p q r s t u v w x y z { | } ~ ▨
SH SX EX ET EQ AK BL BS ▶ ≡ VT FF ← SO SI DL D1 D2 D3 D4 NK SY EB CN EM SB EC FS GS RS US
 ! " # $ % & ' ( ) * + , - . / 0 1 2 3 4 5 6 7 8 9 : ; < = > ?
@ A B C D E F G H I J K L M N O P Q R S T U V W X Y Z [ \ ] ^ _
` a b c d e f g h i j k l m n o p q r s t u v w x y z { | } ~ ▨
```

(Bottom third of display must be blank.
If not blank, replace 410286 circuit card.)

Intensified

EBCDIC Pattern

Normal Intensity

```
SH SX EX ET EQ AK BL BS ▶ ≡ VT FF ← SO SI DL D1 D2 D3 D4 NK SY EB CN EM SB EC FS GS RS US
 ! " # $ % & ' ( ) * + , - . / 0 1 2 3 4 5 6 7 8 9 : ; < = > ?
@ A B C D E F G H I J K L M N O P Q R S T U V W X Y Z ¢ \ | ¬ _
` a b c d e f g h i j k l m n o p q r s t u v w x y z { | } ~ ▨
SH SX EX ET EQ AK BL BS ▶ ≡ VT FF ← SO SI DL D1 D2 D3 D4 NK SY EB CN EM SB EC FS GS RS US
 ! " # $ % & ' ( ) * + , - . / 0 1 2 3 4 5 6 7 8 9 : ; < = > ?
@ A B C D E F G H I J K L M N O P Q R S T U V W X Y Z ¢ \ | ¬ _
` a b c d e f g h i j k l m n o p q r s t u v w x y z { | } ~ ▨
```

(Bottom third of display must be blank.
If not blank, replace 410286 circuit card.)

Flashing Half to Intensified

NOTE: This figure is used with Step 4 of Controller Self-Test Procedures.

Self-Test Mode Displays

C. TESTING (Cont)

13. SINGLE DISPLAY ARRANGEMENTS OFF-LINE CHECKOUT (40/4) (Cont)

LOCAL TESTS

KD/CONTROLLER LOCAL TEST PROCEDURES

STEP	PROCEDURE	CORRECT RESPONSE	LOCAL TEST ANALYSIS
Note: Start with Step 1 if the KD has a typewriter style opcon, start with Step 7 if the KD has a internal numeric cluster style opcon (40K105/CAA).			
	TYPEWRITER STYLE OPCON (Steps 1-6)		
1	Depress LOCAL if the key is not lighted. Request a local test by depressing the L/TST key while CONTROL key is held down.	The following message is displayed on the monitor.	• Cable to opcon. • Opcon. • Refer to Station Analysis, Step 4.

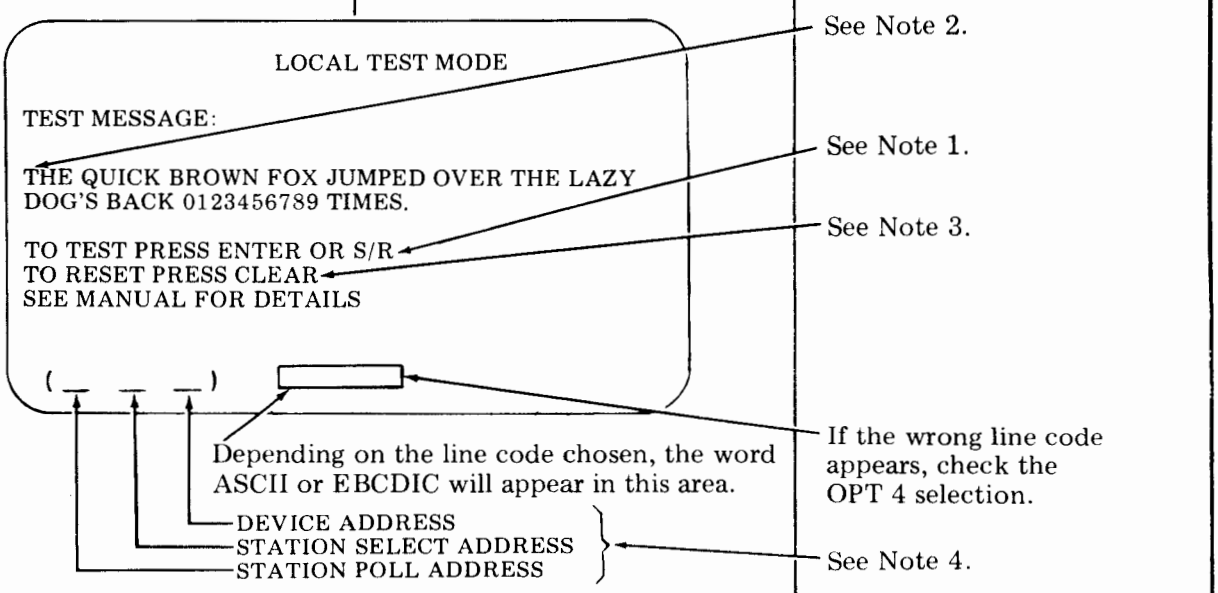

Note 1: If the message is not responded to within 20 seconds; the display will clear, the test will be automatically canceled, and S/R will flash repeatedly. Depress LOCAL to stop S/R from flashing.

Note 2: The QUICK BROWN FOX . . . message may be changed provided that the first character remains a "T". If "T" is changed to any other character, the display will clear and the test will be canceled when S/R is depressed.

Note 3: Besides CLEAR, depression of any PA or PF key will clear display and cancel test.

Note 4: When the SPACE character is selected, it is represented by a blank space. If addresses are incorrect per customer order, check OPT1 selection (for station poll address and select address), or OPT 2 selection (for KD device address).

STEP	PROCEDURE	CORRECT RESPONSE	LOCAL TEST ANALYSIS
2	Depress S/R. THE QUICK BROWN FOX JUMPED OVER THE LAZY DOG'S BACK 0123456789 TIMES. *Note:* If any characters in the QUICK BROWN FOX . . . message were changed before depressing S/R, those characters will appear in the above message.	If received without error, the following message will appear on the monitor.	• If S/R is flashing, go to Step 4, Local Test Analysis. • If "test failed" message is received, go to Step 4, Procedure.
3	Depress CLEAR. Depress LOCAL if station is not connected to LCU.	Test is completed. Display is cleared. Proceed to Step 6.	
4	If message is received with an error in Step 2, the following message will be displayed on the monitor. **TEST FAILED** TEST MESSAGE: THE QUICK BROWN FOX JUMPED OVER THE LAZY DOG'S BACK 0123456789 TIMES' RETEST PRESS ENTER OR S/R TO RESET PRESS CLEAR SEE MANUAL FOR DETAILS (_ _ _)	Go to Step 5.	Symptom — Flashing S/R in Step 2 • Normal Local Test: Replace 410290. • Analog Loopback Test: Check data set or data set cable. Replace controller back panel. (Data set DSR not "on" in AL mode can cause this failure.) • Far-End Digital Loopback Test: Check far-end data set or check facilities between data sets. *Note 1:* Local test is canceled by symptom. *Note 2:* Depress LOCAL to stop flashing S/R.
5	Depress LOCAL if station is not connected to LCU. Retry Steps 1 and 2 once then cancel test by depressing CLEAR key.		If test still fails, run controller self-tests.
6	If the local test of the KD is successfully completed, go to Printer Local Test Procedures and KD Local Test Procedures.		

C. TESTING (Cont)

13. SINGLE DISPLAY ARRANGEMENTS OFF-LINE CHECKOUT (40/4) (Cont)

KD/CONTROLLER LOCAL TEST PROCEDURES (Cont)

STEP	PROCEDURE	CORRECT REPONSE	LOCAL TEST ANALYSIS
	INTERNAL NUMERIC CLUSTER STYLE OPCON (Steps 7 through 15)		
7	Request a local test by depressing the L/TST key and the ALPHA key simultaneously.	The following message is displayed on the monitor.	• Cable to opcon. • Opcon. • Refer to Station Analysis, Step 4.

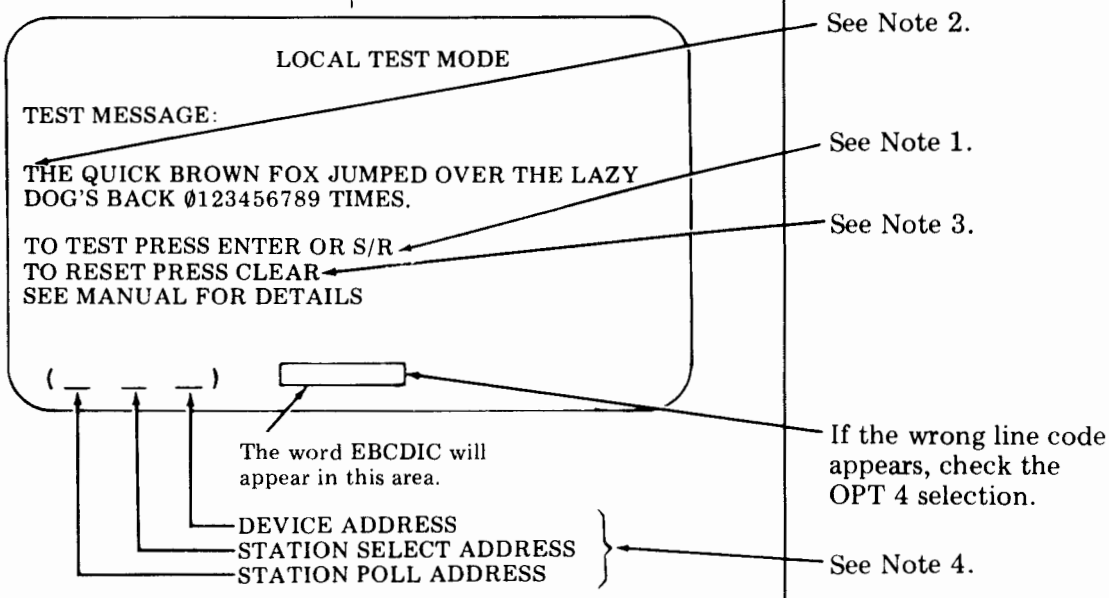

Note 1: If the message is not responded to within 20 seconds; the display will clear, the test will be automatically canceled, and S/R will flash repeatedly. Depress RESET to stop S/R from flashing.

Note 2: The QUICK BROWN FOX . . . message may be changed provided that the first character remains a "T". If "T" is changed to any other character, the display will clear and the test will be canceled when ENTER is depressed.

Note 3: Besides CLEAR, depression of any PA or PF key will clear display and cancel test.

Note 4: When the SPACE character is selected, it is represented by a blank space. If addresses are incorrect per customer order and ASCII or EBCDIC Station and Device Identification, Check OPT 1 selection (for station poll address), or OPT 2 selection (for KD device address).

STEP	PROCEDURE	CORRECT RESPONSE	LOCAL TEST ANALYSIS
8	Depress ENTER. THE QUICK BROWN FOX JUMPED OVER THE LAZY DOG'S BACK Ø123456789 TIMES. *Note:* If any characters in the QUICK BROWN FOX. . . message were changed before depressing ENTER, those characters will appear in the above message.	If received without error, the following message will appear on the monitor.	•If S/R is flashing, go to Step 13, Local Test Analysis. •If "test failed", message is received, go to Step 13, Procedure.
9	Depress CLEAR.	Display is cleared.	
10	Request a local test by depressing the L/TST key and the NUMERIC key simultaneously.	The message of Step 7 is displayed.	Replace opcon.
11	Depress ENTER.	As given in Step 8.	As given in Step 8.
12	Depress CLEAR.	Test is completed. Display is cleared. Proceed to Step 15.	
13	If message is received with an error, the following message will be displayed on the monitor. **TEST FAILED** TEST MESSAGE: THE QUICK BROWN FOX JUMPED OVER THE LAZY DOG'S BACK Ø123456789 TIMES. RETEST PRESS ENTER OR S/R TO RESET, PRESS CLEAR SEE MANUAL FOR DETAILS (_ _ _) [ ]	Go to Step 14.	Symptom — Flashing S/R. Step 4 "Local Test Analysis" applies.
14	Depress RESET if station is not connected to LCU. Retry Steps 7 and 8 once then cancel test (depress CLEAR key).		If test still fails, run controller self-tests.
15	If local test of KD device is successfully completed, proceed to Printer Local Test Procedures.		

C. TESTING (Cont)

13. SINGLE DISPLAY ARRANGEMENTS OFF-LINE CHECKOUT (40/4) (Cont)

Stn or Dvce No.	SPA	SSA	DA	Stn No.	SPA	SSA
00	SP	—	SP	18	K	2
01	A	/	A	19	L	3
02	B	S	B	20	M	4
03	C	T	C	21	N	5
04	D	U	D	22	0	6
05	E	V	E	23	P	7
06	F	W	F	24	Q	8
07	G	X	G	25	R	9
08	H	Y	H	26	](!)	:
09	I	Z	I	27	$	#
10	[(¢)	¦	[(¢)	28	*	@
11	.	,	.	29	)	'
12	<	%	<	30	;	=
13	(	_	(	31	∧(¬)	"
14	+	>	+			
15	!(|)	'	!(|)			
16	&	0				
17	J	1				

NOTE: This figure is used with Step 1 or Step 7 of KD/Controller Local Test Procedures. The figure indicates all station and device identification for ASCII or EBCDIC coded stations. EBCDIC characters are shown in parentheses. Device numbers 00 through 15 can apply.

ASCII or EBCDIC Station and Device Identification

Printer Local Tests

If a printer is not part of the station, proceed to Page 176, KD Local Test Procedures. If printer is part of the station, perform the Printer Local Test Procedures.

PRINTER LOCAL TEST PROCEDURES

NOTE: If a printer is not part of the station, proceed to KD Local Test Procedures.

STEP	PROCEDURE	RESULTS	TROUBLE ANALYSIS
1	Preliminary requirements of printer:		Refer to Manual 355.
	a. Ribbon and paper loaded.	Printer motor is off.	
	b. Switches (top right or left of printer, cabinet cover raised). LF-1 Test-Off Forms (Tractor Feed Only) — On	*Note:* Fan in tractor feed printer cabinet must be ON (air flows).	
	c. Cabinet cover closed and ac power switched ON.		

STEP	PROCEDURE	RESULTS	TROUBLE ANALYSIS
2	Momentarily depress PAPER button (red) on cover of printer cabinet.	Paper feeds out as long as button is depressed.	•Check for: a. Printer cable not connected. b. Printer cable defective. c. Defective 410290 circuit card. Refer to Manual 355. *Note:* Continuous feedout will occur if form selector lever not fully seated in slot 1, 2, 3, or 4.
3	TRACTOR FEED PRINTER ONLY: Depress and release FORMS ADVANCE button (black) on printer cabinet cover. (See Note in Trouble Analysis column.)	Paper feeds out until first line of next form is reached, then stops.	
4	Unlatch and raise printer cabinet cover.	None	
5	Raise cover interlock switch to maintenance position.	None	
6	Set test switch to ON, allow printer to print several lines, then turn test switch OFF.	Printer turns on and prints font identification symbol repeatedly in all columns until switch is turned off.	Refer to Manual 355.
7	FRICTION FEED PRINTER: Lift paper roll to simulate a paper alarm. Lower paper roll, guide paper through window, and close cabinet cover. TRACTOR FEED PRINTER: Tear off next form at perforations under pedestal top, then depress PAPER button on cabinet top until last form passes through printer. Reload forms, guide first form through window, and close cabinet cover.	Paper indicator lights. Paper indicator goes out. 80-Column Printer: Paper indicator lights. 132-Column Printer: If Option 48.a. is selected, paper indicator lights when last form is partly through printer. If Option 48.b. is selected, paper indicator does not light until form is completely out of printer. Paper indicator goes out.	Refer to Manual 355.

C. TESTING (Cont)

13. SINGLE DISPLAY ARRANGEMENTS OFF-LINE CHECKOUT (40/4) (Cont)

PRINTER LOCAL TEST PROCEDURES (Cont)

STEP	PROCEDURE	RESULTS	TROUBLE ANALYSIS
8	Type some text on the display (lower case and capitals if possible) and then depress PRINT LOCAL.	LOCAL extinguishes and PRINT LOCAL key lights and then goes off when printer buffer receives the message; LOCAL lights. Printer copies entire display (24 lines): Monocase Printer — All display characters print as capitals. See Note following Step 5 of KD Local Test Procedures. Up-Low Printer — All display characters are copied as displayed. *Note 1:* Friction feed printer may or may not feed out 16 lines of paper before turning off, depending on Option 18. Tractor feed printer may or may not form feed before turning off depending on Options 18 and 39. *Note 2:* After printer is finished copying, the motor will remain on for approximately 10 seconds before turning off.	•Flashing PRINT LOCAL indicates: a. Printer cabinet lid open. b. Form or paper-out condition. c. Printer ac power is off. d. Printer is not print local to the KD. •Refer to Manual 355. •Option 22b not installed in monocase printer. •Character set of type carrier in printer does not match Option 19. •Option 19c not installed in printer. Refer to Manual 355.

KD Local Test

Check the KD using the procedure given in a., b. and KD Local Test Procedures. The locations of the various control and data keys referred to in KD Local Test Procedures are given in Opcon Keytop Layouts. The SDS has only one KD and therefore, only one opcon and one monitor.

Follow these instructions before beginning KD Local Test Procedures.

a. Turn on power to the set or station (LOCAL lights on the opcon).

b. Turn on power to the display and adjust brightness.

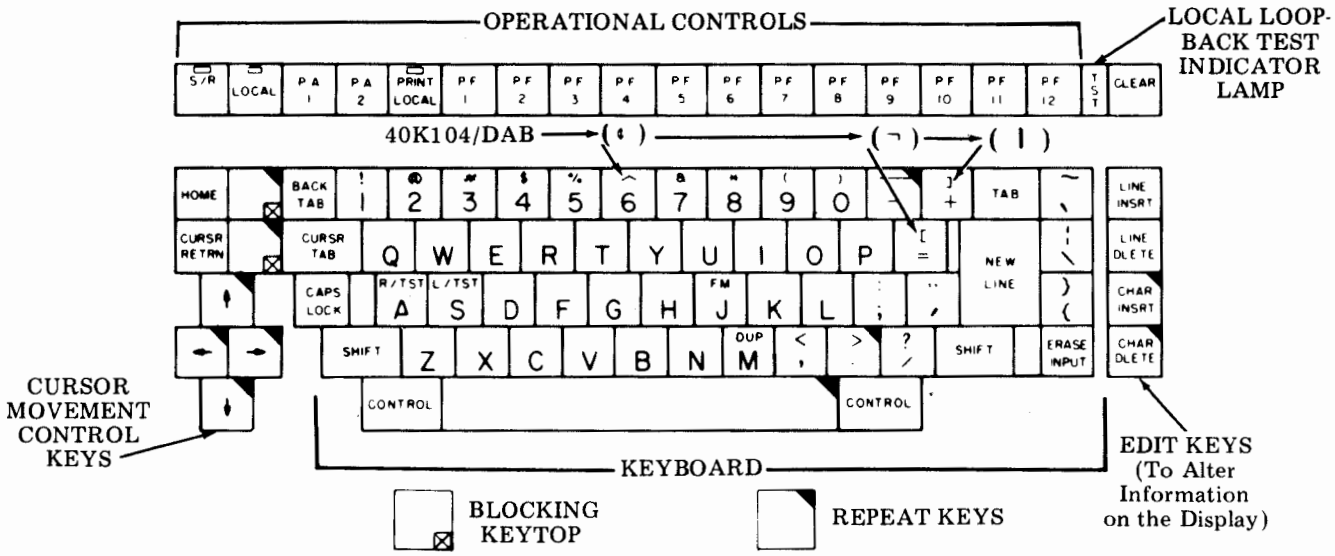

40K104/DAA or 40K104/DAB Keytop Layout

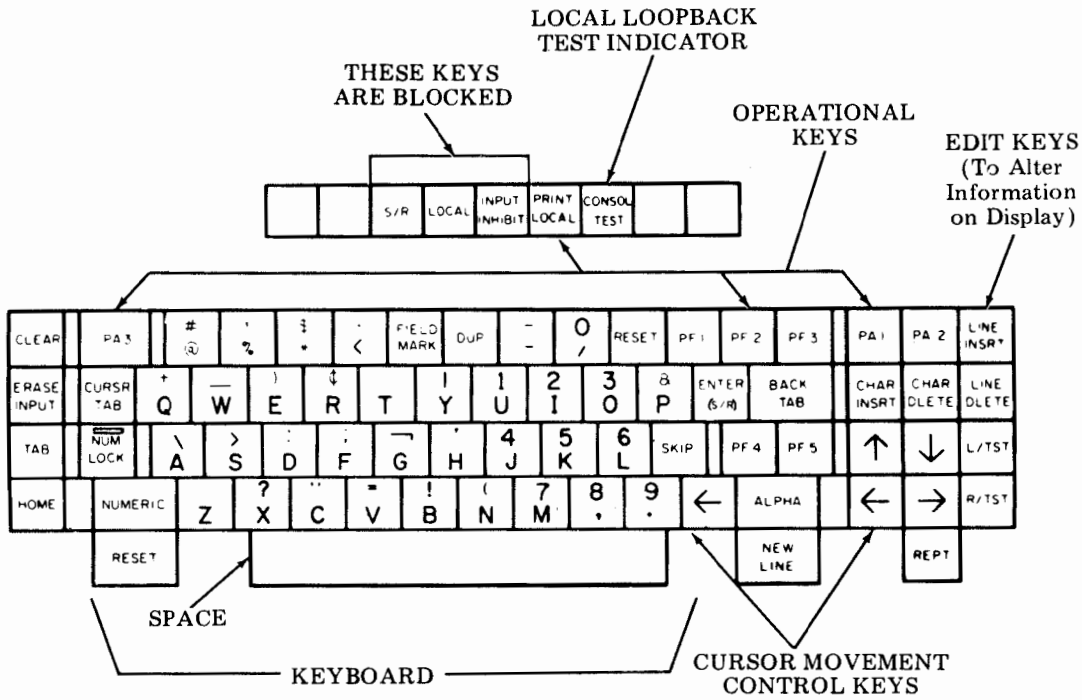

NOTE: The only locking keytop is NUM LOCK, depress to set (lights), depress to release (light goes out).

40K105/CAA Keytop Layout

Opcon Keytop Layouts

C. TESTING (Cont)

13. SINGLE DISPLAY ARRANGEMENTS OFF-LINE CHECKOUT (40/4) (Cont)

KD LOCAL TEST PROCEDURES

STEP	PROCEDURE	RESULTS	TROUBLE ANALYSIS
	Note: Start with Step 1 if KD of the station has typewriter style opcon. Start with Step 21 if KD has an internal numeric cluster style opcon.		
1	a. Place typewriter style opcon into the caps mode by depressing and latching the CAPS LOCK key. (Opcons with no CAPS LOCK key require no action.) b. On the monitor: • Observe that the raster is barely present when brightness control is turned up fully. • When cursor is in home position, it is approximately 1/2 inch from left side of display. • Enter a line of Es at top and bottom of display, then HOME cursor. Requirements are met.	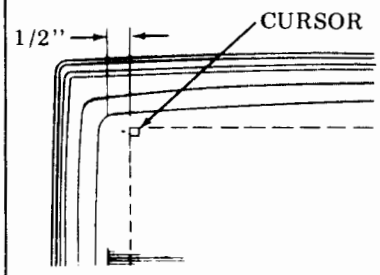	• If raster is not present go to Monitor Analysis. • If a requirement is not met, refer to adjustments of monitor in Manual 352 to meet requirement. • If E cannot be entered, go to Opcon Analysis. *Note:* If on-line testing is done with the TS 40/4 LS test set, be sure to perform all of Step 1.

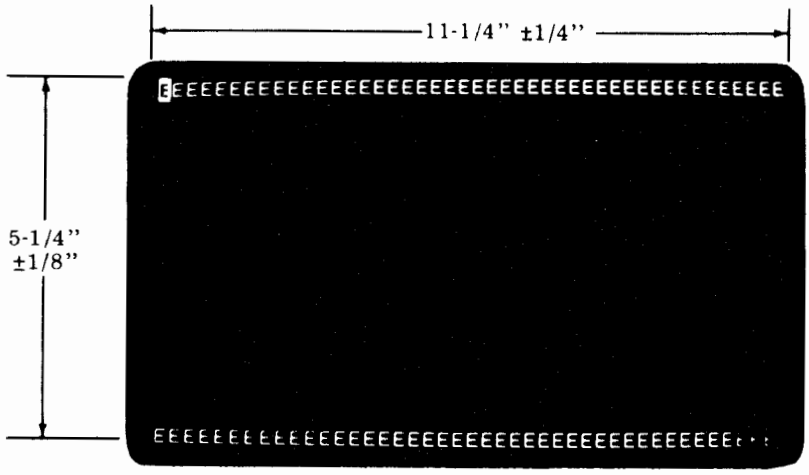

Requirements:

- Raster aligned vertically and horizontally.
- All Es sharply defined.
- Height and width of display as indicated.
- Es uniform across full width.
- Height of Es same at top and bottom lines.

STEP	PROCEDURE	RESULTS	TROUBLE ANALYSIS
2	Home the cursor and depress a few keys on the keyboard portion of the opcon.	Upper case alpha characters and numeric characters can be displayed. *Note:* Each key need not be checked except for a trouble call. Each key shall function each time it is depressed.	
3	Disengage the CAPS LOCK key by depressing it again momentarily. Again depress a couple of keys on the keyboard portion of the opcon. (Opcons with no CAPS LOCK key require no action; go to Step 4.)	The alpha characters described in Step 2 are displayed in lower case (ie, abcdef, etc).	

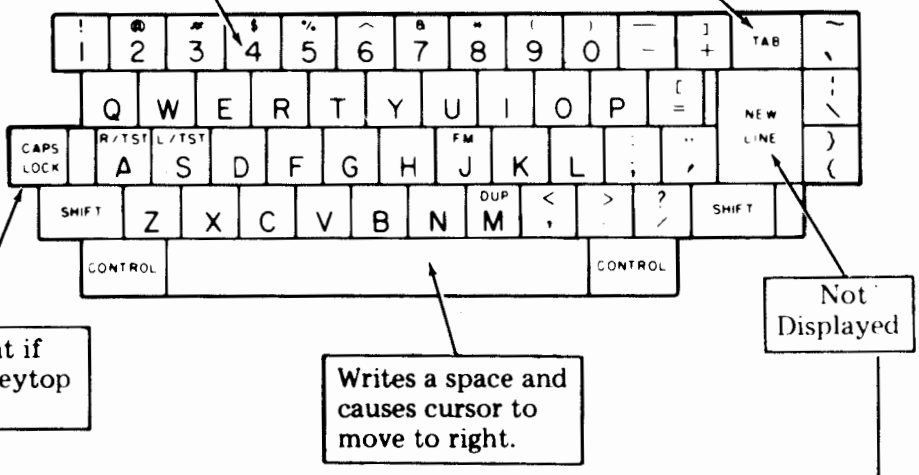

C. TESTING (Cont)

13. SINGLE DISPLAY ARRANGEMENTS OFF-LINE CHECKOUT (40/4) (Cont)

KD LOCAL TEST PROCEDURES (Cont)

STEP	PROCEDURE	RESULTS	TROUBLE ANALYSIS
4	Depress the left then the right [SHIFT] key while depressing and checking operation of one of the following alpha keys (ie, !@#$, etc).	Upper portion of the depressed keys are displayed. (Or ¢) (Or ¬) (Or |) 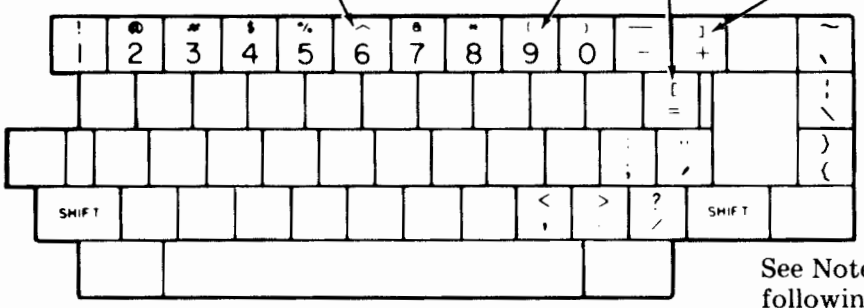 See Note following Step 5.	
5	Depress the left [CONTROL] key together with the [FM J] key; then depress the right [CONTROL] key together with the [DUP M] key.	See Note following Step 5. Displayed as F_S Displayed as D_L 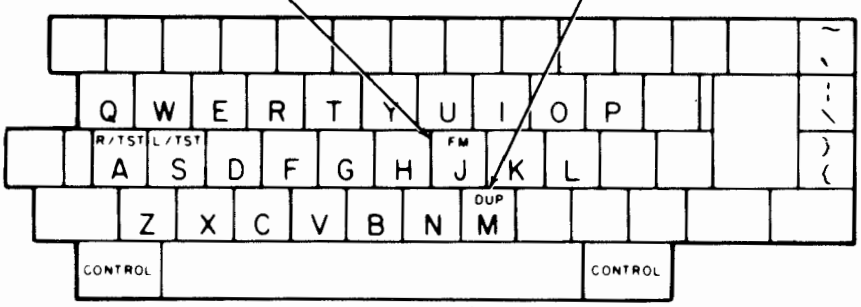	

STEP	PROCEDURE	RESULTS	TROUBLE ANALYSIS

Note: Some characters may be displayed as a character other than the character received on-line or entered from the opcon. See the table below which also provides printer actions for applicable characters.

Application of Type of 40K104 Opcon		'/DAA or '/DAB					'/DAA			'/DAB			'/DAA or '/DAB	
Character Received From LCU or Entered on 40K104 Type Opcon		~	\	¦	{	}	^	]	[	¢	|	¬	DUP	FM
Character Displayed Using:	ASCII UP-LO	~	\	¦	{	}	^	]	[	^	]	[	DL	FS
	ASCII MONO	^	@	\	[	]	^	]	[	^	]	[	DL	FS
	EBCDIC UP-LO	~	\	¦	{	}	¢	|	¬	¢	|	¬	DL	FS
	EBCDIC MONO	¢	@	\	¬	|	¢	|	¬	¢	|	¬	DL	FS
Character Printed Using Type Carrier:	400629 80C ASCII UP-LO	~	\	¦	{	}	^	]	[	^	]	[	SP	SP
	400645 80C ASCII MONO	^	@	\	[	]	^	]	[	^	]	[	SP	SP
	400777 132C ASCII UP-LO	~	\	¦	{	}	^	]	[	^	]	[	SP	SP
	400780 132C ASCII MONO	^	@	\	[	]	^	]	[	^	]	[	SP	SP
	400783 132C EBCDIC UP-LO	~	\	¦	{	}	¢	|	¬	¢	|	¬	SP	SP
	400784 80C EBCDIC UP-LO	~	\	¦	{	}	¢	|	¬	¢	|	¬	SP	SP
	400785 80C EBCDIC MONO	¢	@	\	¬	|	¢	|	¬	¢	|	¬	SP	SP
	400887 132C EBCDIC MONO	¢	@	\	¬	|	¢	|	¬	¢	|	¬	SP	SP

LEGEND:

◥ Will print with fold-over option in printer enabled. Error symbol will print if fold-over option is not enabled.

C. TESTING (Cont)

13. SINGLE DISPLAY ARRANGEMENTS OFF-LINE CHECKOUT (40/4) (Cont)

KD LOCAL TEST PROCEDURES (Cont)

STEP	PROCEDURE	RESULTS	TROUBLE ANALYSIS
6	Depress one of the following keys with additional force, [−] [>] [SPACE]	The space key repeatedly moves the cursor.	
7	Depress the [HOME] key. Then in sequence depress momentarily with more force than normally required, each cursor movement key shown. 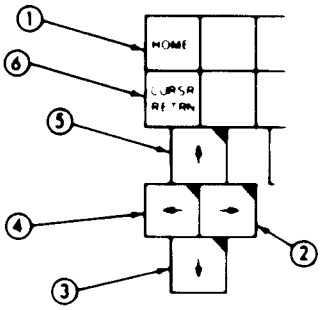	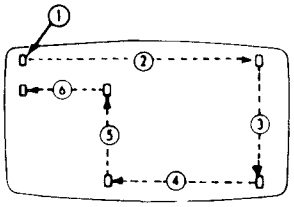 *Note:* In local opcon operation, attempts to move the cursor off the display will result as shown: 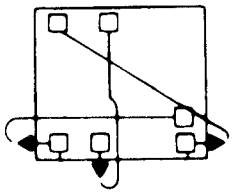 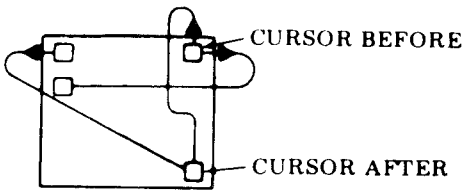	
8	Depress ERASE INPUT key.	Display clears and cursor goes to home position. LOCAL key remains lighted.	
9	Type the alpha characters A through J on the display. Place the cursor over the character E and depress the [CHAR INSRT] key once, then depress it fully — releasing it after the characters move to the next line.	① ABCD[E]FGHIJ ② ABCD[ ]EFGHIJ ③ ABCD[ ] EFGHIJ *Note:* CHAR INSRT and CHAR DLETE affect all 24 lines.	

STEP	PROCEDURE	RESULTS	TROUBLE ANALYSIS
10	Depress the [CHAR DLETE] key momentarily, then depress it fully.	ABCD [ ] EFGHIJ ABCD [E] FGHIJ Characters delete one at a time or repeatedly when key is held depressed.	
11	Depress the [LINE INSRT] key three times.	The cursor moves to start of present line, and the line of data moves down three lines.	
12	Depress the [LINE DLETE] key once, then depress it fully.	The line of data moves up one line, then stops on the first line.	
13	Depress [PRINT LOCAL] key (if printer is not provided, go to Step 14).	LOCAL extinguishes, PRINT LOCAL key lights and then goes off when printer buffer receives the message; LOCAL lights. Printer copies entire display (24 lines): <u>Monocase Printer</u> — All display characters print as capitals. <u>Up-Low Printer</u> — All characters are copied as displayed.	•Flashing PRINT LOCAL indicates printer: a. Cabinet lid is open. b. Is in form-out or paper-out condition. c. The ac power is off. d. Printer SSI connection is not made. *Note:* Depress LOCAL to clear flashing PRINT LOCAL.
14	Place the cursor away from home position and depress the [CURSR TAB] key.	The cursor returns to home position. *Note:* Displayed data is not affected by CURSOR TAB and BACK TAB keys.	
15	Place the cursor away from home position and depress the [BACK TAB] key.	The cursor returns to home position.	
16	Place the cursor away from home position and depress the [TAB] key.	Cursor returns to home position. Any characters below cursor will be cleared. *Note:* Null displayed as space.	

C. TESTING (Cont)

13. SINGLE DISPLAY ARRANGEMENTS OFF-LINE CHECKOUT (40/4) (Cont)

KD LOCAL TEST PROCEDURES (Cont)

STEP	PROCEDURE	RESULTS	TROUBLE ANALYSIS
17	Type some text on the opcon and then depress [S/R] Attempt to type some text on the opcon.	Text is displayed. LOCAL extinguishes when S/R is depressed. Attention bell sounds each time a key is depressed (provided typing rate does not exceed maximum repeat bell rate).	
18	Alternately depress LOCAL then depress [PA 1] key, then [LOCAL] key and [PA 2], [PF 1], [PF 2] through [PF 12], [R/TST] and [CLEAR] keys in the same manner.	[LOCAL] is lit and extinguishes when a key is depressed (same for each key). Data on display remains unchanged, except when CLEAR is depressed; all data clears from display and cursor goes to home position.	
19	This step applies only to monocase opcons (blocking keytop over CAPS LOCK position). a. Depress ERASE INPUT and QUOTES keys together with additional force. b. Depress A (do not depress SHIFT). c. Depress ERASE INPUT and P keys together with additional force.	 TST indicator lights and remains lighted. S/R key lights. If S/R key does not light, see Trouble Analysis column entry. TST indicator light goes out.	 Opcon Analysis •Remove blocking keytop, check that plunger is in lower position. •Replace opcon. Opcon Analysis
20	When typewriter style opcon has successfully passed Steps 1 through 19, refer to note.		
	INTERNAL NUMERIC CLUSTER STYLE OPCON (Steps 21 through 42)		
21	a. Place internal numeric cluster style opcon into the NUM LOCK mode by depressing and latching the NUM LOCK key. b. Perform Step 1b.	The indicator lights. Results and Trouble Analysis of 1b apply.	

NOTE: Data Set Analog Loopback Self-Test procedures are dependent on the type of data set used and are beyond the scope of this manual.

STEP	PROCEDURE	RESULTS	TROUBLE ANALYSIS
22	Home the cursor and depress a few keys on the keyboard portion of the opcon.	Upper case alpha characters and numeric characters can be displayed.	

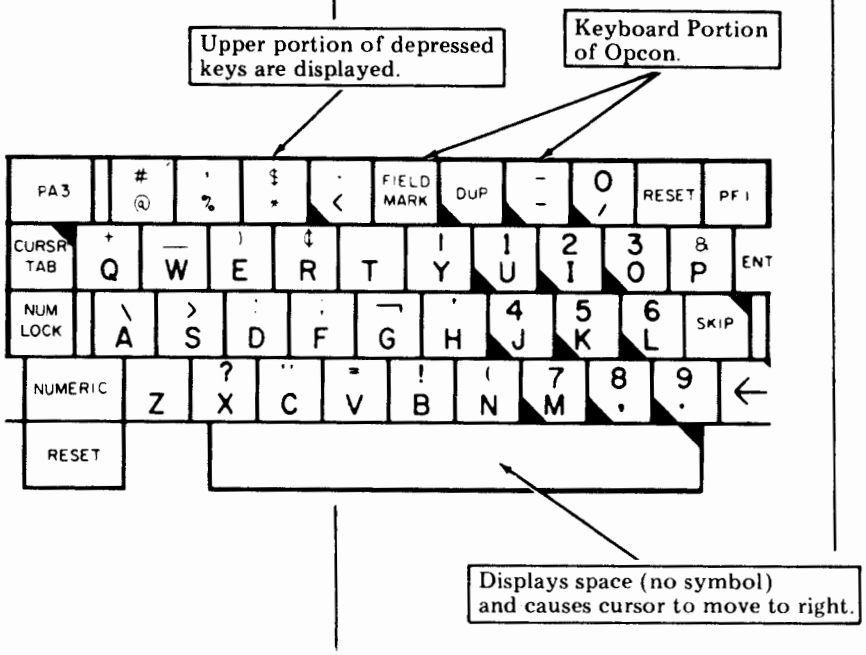

Note 1: Each key need not be checked except for a trouble call. Each shall function each time it is depressed. Depressing [Z] or [T] will display space (no symbol) and cause cursor to move to right.

Note 2: TAB writes Nulls (displayed as space) from cursor position to beginning of next field. NEW LINE is not displayed.

Note 3: If Option 407.a. is installed in the SDC, NUMERIC must be depressed (or NUM LOCK key lighted) to enter characters outside the numeric cluster (keys in cluster are marked: [ ]).

23	Hold down the [ALPHA] key while depressing an alphanumeric key (ie, A, B, C, etc).	The corresponding alpha character (ie, A, B, C, etc) is displayed.	
24	Disengage the [NUM LOCK] key by depressing it again momentarily. The indicator light goes out. Depress a couple of keys (ie, A, B, C, D, etc) on the keyboard portion of the opcon.	The alpha characters shown in the figure of Step 2 (lower portion of keytops) are displayed (ie, A, B, C, D, etc).	

C. TESTING (Cont)

13. SINGLE DISPLAY ARRANGEMENTS OFF-LINE CHECKOUT (40/4) (Cont)

KD LOCAL TEST PROCEDURES (Cont)

STEP	PROCEDURE	RESULTS	TROUBLE ANALYSIS
25	Hold down the [NUMERIC] key while depressing and checking operation of one of the following alpha keys: (#, +, \, etc.).	Upper portion of depressed keys are displayed.	
26	Depress the [FIELD MARK] key, then depress the [DUP] key.	FIELD MARK is displayed as FS. DUP is displayed as DL.	
27	Fully depress the [SPACE] key.	The space key repeatedly moves the cursor.	
28	Hold down the [REPT] key while depressing any alphanumeric key.	The alphanumeric character is repeated.	
29	(1) Depress [HOME] key. (2) Depress * [→] key. (3) Depress * [↓] key. (4) Depress * [←] key. (Try both [←] keys.) (5) Depress * [↑] key. *With more force than normally required. *Note:* There is no CURSR RTRN key on this opcon.	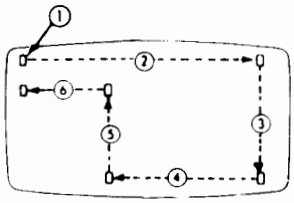 *Note:* In local opcon operation, attempts to move the cursor off the display will result as shown: 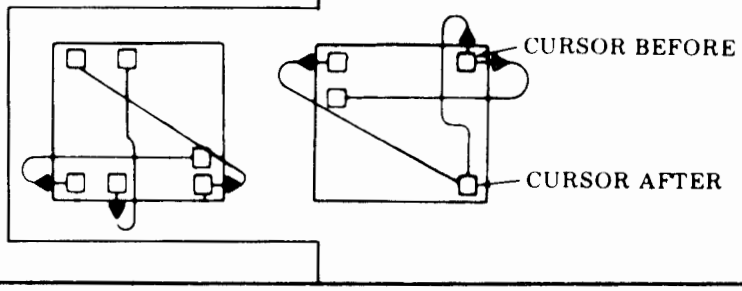 	

STEP	PROCEDURE	RESULTS	TROUBLE ANALYSIS
30	Depress ERASE INPUT key.	Display clears and cursor goes to home position. LOCAL key remains lighted.	
31	Type the alpha characters A through J on the display. Place the cursor over the character E and depress the [CHAR INSRT] key once, then also depress [REPT] -- releasing both after the characters move to the next line.	① ABCD[E]FGHIJ ② ABCD[ ]EFGHIJ ③ ABCD[ ] EFGHIJ *Note:* CHAR INSRT and CHAR DLETE affect all 24 lines. Charaters move slowly.	
32	Depress the [CHAR DLETE] key momentarily.	ABCD [ ] EFGHIJ ABCD [ ] EFGHIJ Characters EFGHIJ move one position to the left as shown.	
33	Depress the [LINE INSRT] key three times.	The cursor remains at its present location, and the line of data moves down three lines.	
34	Depress the [LINE DLETE] key once.	The line of data moves up one line.	
35	Depress [PRINT LOCAL] key (if printer) is not provided, go to Step 36).	LOCAL extinguishes, PRINT LOCAL key lights and then goes off when printer buffer receives the message; LOCAL lights. Printer copies entire display (24 lines).	•Flashing PRINT LOCAL indicates printer: a. Cabinet lid is open. b. Is in form-out or paper-out condition. c. ac power is off. d. Printer SSI connection is not made. *Note:* Depress RESET to clear flashing PRINT LOCAL.
36	Place the cursor away from home position and depress the [CURSR TAB] key. Repeat Step 36 but depress the [SKIP] key.	The cursor returns to home position. *Note:* Displayed data is not affected by CURSOR TAB, SKIP and BACK TAB keys.	

C. TESTING (Cont)

13. SINGLE DISPLAY ARRANGEMENTS OFF-LINE CHECKOUT (40/4) (Cont)

KD LOCAL TEST PROCEDURES (Cont)

STEP	PROCEDURE	RESULTS	TROUBLE ANALYSIS
37	Place the cursor away from home position and depress the [BACK TAB] key.	The cursor returns to home position.	
38	Place the cursor away from home position and depress the [TAB] key.	Cursor returns to home position. Any characters below cursor will be cleared. *Note:* Null displayed as space.	
39	Type some text on the opcon and then depress [ENTER (S/R)]	Text is displayed when ENTER is depressed, LOCAL extinguishes, INPUT INHIBIT lights.	
40	Type some text on the keyboard portion of the opcon.	Attention bell sounds each time a key is depressed. No more text is displayed. *Note:* The audible alarm control on the opcon should be adjusted to allow bell to be heard.	
41	Alternately depress [RESET] (next to PF1) then depress [PA 1] key, then [RESET] key and [PA 2] [PF 3], [PF 1] through [PF 5] and [CLEAR] keys in the same manner. Depress [RESET], then depress [ALPHA] at the same time as [R/TST] Depress [RESET] (next to NUMERIC). *Note:* The PF6 through PF12 are not present on this opcon.	[LOCAL] is lit and extinguishes when PA1 key is depressed (same for each key). Data on display remains unchanged, except when CLEAR is depressed; all data clears from display and cursor goes to home position.	

When the KD has successfully completed these tests, see note.

Note: Data Set Analog Loopback Self-Test procedures are dependent on the type of data set used and are beyond the scope of this manual.

Notes for Data Set Analog Loopback Self-Test

Data Set Analog Loopback Self-Test procedures are dependent on the type of data set used and are beyond the scope of this manual.

Notes For On-Line Test Methods

Preliminary Requirements for On-Line Testing: Data set must pass the requirements of the Data Set Analog Loopback Procedures Test:

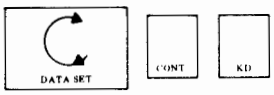

OPT 8 = @

On-Line Testing is divided into three parts as follows:

(1) Near-End Analog Loopback Test

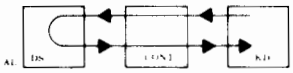

OPT 8 = C

(2) Far-End Digital Loopback Test to 40/4 from the far end.

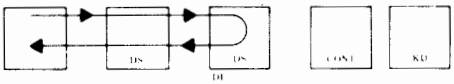

Far End OPT 8 = @

If Step 2 cannot be performed, a Far-End Digital Loopback Test to far-end from the 40/4 may be performed.

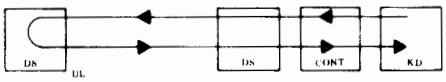

Far End OPT 8 = @

(3) End-to-End Installation Test -- Performed with assistance of a far-end test station.

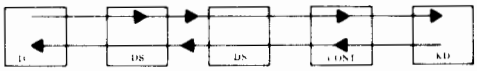

Far End OPT 8 = @

NOTE: If the station fails an applicable on-line test, go to Station Analysis for troubleshooting.

C. TESTING (Cont)

13. SINGLE DISPLAY ARRANGEMENTS OFF-LINE CHECKOUT (40/4) (Cont)

Near-End Analog Loopback Test

This test provides a craftsperson with a local test method to check station and data set operation prior to doing "in service operation acceptance" test with the customer's equipment. This test must be performed, if possible, one time before continuing testing. Not all stations are capable of performing this test. If this test can be made, first perform the following:

a. Enter the "OPT" mode by depressing the controller Self-Test switch for one to two seconds.
b. Move the cursor to the character following "OPT 8" by depressing CURSR TAB repeatedly.
c. Depress "C".
d. Return to operating mode by depressing LOCAL (or RESET).
e. Perform Local Tests using the same test routine given in KD/Controller Local Test Procedures (up to Step 5 only). The test occurs when S/R key is depressed.
f. If test is not successfully completed, the controller or data set is at fault. If test is successfully completed, perform a. and b. above, then: (208A only) depress @, or (251A1 only) depress A.

CAUTION 1: DO NOT TAKE THE DATA SET OUT OF ANALOG LOOPBACK DURING OR AFTER THIS TEST. IF AL IS RELEASED WHILE OPT 8C IS INSTALLED, DATA SENT BY S/R KEY DEPRESSION CAN BE SENT INTO THE CUSTOMER'S DATA SYSTEM DURING THE TEST; ANY DATA OPERATION OCCURRING AT THAT TIME WOULD BE SCRAMBLED.

Far-End Digital Loopback Test From Test Center

CAUTION 2: DO NOT PERFORM THE DIGITAL LOOPBACK TEST IF THE CUSTOMER DATA CHANNEL IS ON THE SAME CIRCUIT WITH OTHER STATIONS WHICH ARE ACTIVELY SENDING OR RECEIVING DATA. IF THIS TEST IS PERFORMED ON AN ACTIVE CIRCUIT, DATA TRANSMISSIONS ON THAT CIRCUIT WILL BE SCRAMBLED AND POSSIBLY HALT THE DATA SYSTEM OPERATION. BEFORE TESTING, REQUEST PERMISSION FROM CUSTOMER AND DATA TRANSMISSION CENTER FOR TIME AND COOPERATION TO TEST.

Far-End Digital Loopback Test From 40/4

If permission to perform this test is not granted, see End-to-End Installation Test. If a multistation arrangement shares the same data communications circuit, all communications on that circuit must cease during the test period.

End-to-End Installation Test

Before attempting End-to-End Installation Test or restoring the station to service, follow a. through d.

a. Enter the "OPT" mode by depressing the Self-Test switch for about two seconds.
b. Check that the character following OPT 8 is @.

c. If the proper character is not displayed, use CURSR TAB repeatedly to move the cursor to the character following "OPT 8". Depress "@".
d. Depress LOCAL (or RESET) to return to the operating mode.

Notes For Checkout of Received Printer Message

If a printer is part of the station, check for correctness of printed test message. If printer is not part of station, proceed to Checkout of Received KD Message.

The printer motor will remain on for approximately 5 to 10 seconds after the test message is received.

Checkout of Received KD Message

Notes to check for correctness of display and station options:

Option 402.a. (OPT 6H Displayed) -- Continuous attention (the opcon bell repeatedly sounds if volume is turned up) until LOCAL is depressed; depress LOCAL. Bell silences.

or

Option 402.b. (OPT 6@ Displayed) -- One second attention (the opcon bell sounds if volume is turned up) and LOCAL key lights.

Option 406.a. (OPT 7@ Displayed) -- Alpha characters can be typed over periods in the numeric field (bell sounds). This entry applies if OPT 4G is displayed (hold down ALPHA key while typing characters).

Option 406.b. (OPT 4@ Through OPT 4C and OPT 7A Displayed) -- Bell sounds when alpha is typed over numeric field; only numeric data can be entered into field.

D. TROUBLESHOOTING

1. GENERAL

The troubleshooting information contained herein is a step-by-step procedure to determine which component of the Model 40 Set or Station is failing. Information beginning on Page 195, SET ANALYSIS provides general troubleshooting procedures for Model 40 Sets. Information beginning on Page 205, 9140 STATION CONTROLLER ANALYSIS provides troubleshooting procedures specifically for Model 40 Stations equipped with a 9140 Station Controller exhibiting on-line failure conditions. Information beginning on Page 225, MODEL 40/4 MINI- AND MAXI-STATION ANALYSIS provides troubleshooting procedures specifically for Synchronous Model 40 (Model 40/4) Station Arrangements.

To use the troubleshooting information, always start with Step 1 of the analysis, and follow the indicated procedure to the directive which specifies component replacement or proceed to the component analysis. The analysis in this section will isolate troubles to major components (such as monitor, printer, power supply, controller, etc).

When installing a replacement component, make certain that all options (if present) in this component are implemented for proper set operation

Where more than one component is specified for replacement, they shall be substituted one at a time in the order specified. The original component shall be replaced if the trouble is not corrected before making the next indicated substitution.

Once the trouble has been corrected, the terminal should be checked out to be sure that it is performing properly.

CAUTION 1: TURN OFF ALL POWER OR SIGNAL SOURCES BEFORE REMOVING OR REPLACING ANY COMPONENT OF THE STATION OR SET.

For wire color codes, cable, connector, and other wiring indicated for continuity checks, etc in troubleshooting, refer to the set and station wiring diagrams on Page 239, WIRING DIAGRAMS or to the appropriate part of this manual on component wiring information.

CAUTION 2: TO AVOID POSSIBLE INTERNAL DAMAGE TO MOS CIRCUITRY, THE 346392 STATIC DISCHARGE STRAP MUST BE WORN WHENEVER THE 40C303 INTEGRATED ROP CONTROLLER OR THE 410142 OR 410734 CIRCUIT CARDS ARE HANDLED. THE STRAP MUST CONTACT THE SKIN TIGHTLY. THE GROUND STRAP MUST BE CONNECTED TO GROUND (EITHER "EARTH" GROUND OR FRAME GROUND) VIA ITS ASSOCIATED CLIP (REFER TO PAGE 71).

Test Switches and Indicators Used With 40/0, 40/1, 40/2, and 40/3

NOTE: The operation of test switches and use of indicators should be done under the direction of the troubleshooting analysis procedures.

Tractor Feed Printer

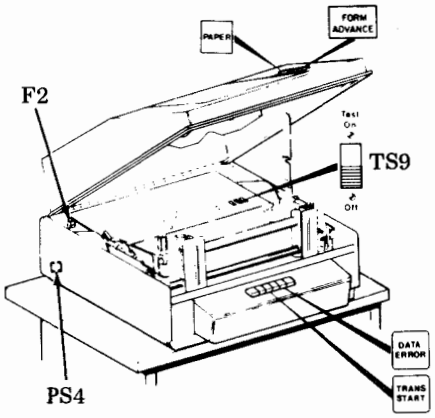

Friction Feed Printer

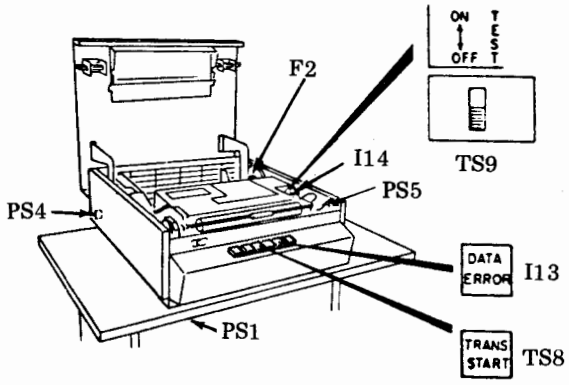

CAUTION: AVOID PLACING FINGERS BETWEEN CARDS WHEN DEPRESSING TS1-TS6.

Test Switches and Indicators (Printers)

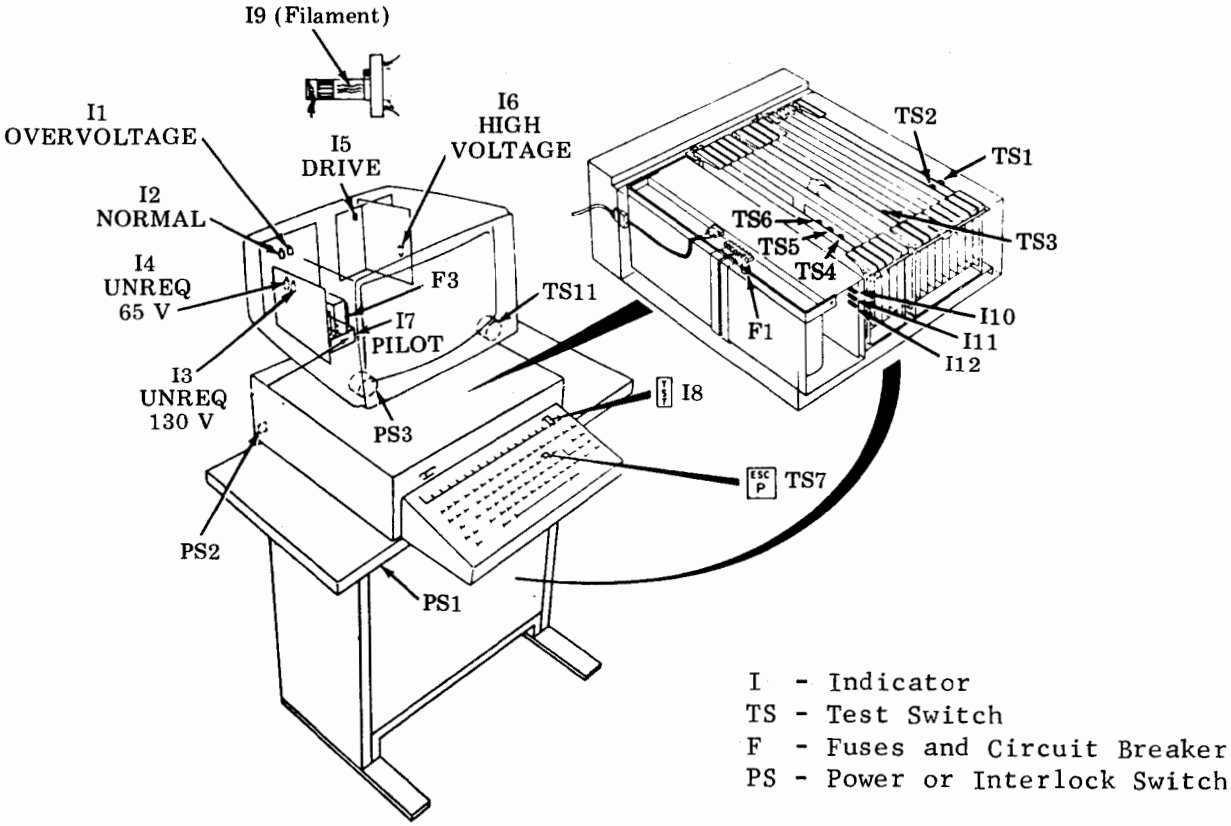

I - Indicator
TS - Test Switch
F - Fuses and Circuit Breaker
PS - Power or Interlock Switch

Test Switches and Indicators (Controller and KD)

D. TROUBLESHOOTING (Cont)

1. GENERAL (Cont)

Test Switches and Indicators Used With 40/4

NOTE: The operation of test switches and indicators should be done under the direction of the troubleshooting analysis procedures.

I	—	Indicator
TS	—	Test Switch
F	—	Fuses and Circuit Breaker
PS	—	Power Switch
FS	—	Functional Switch
IS	—	Interlock Switch

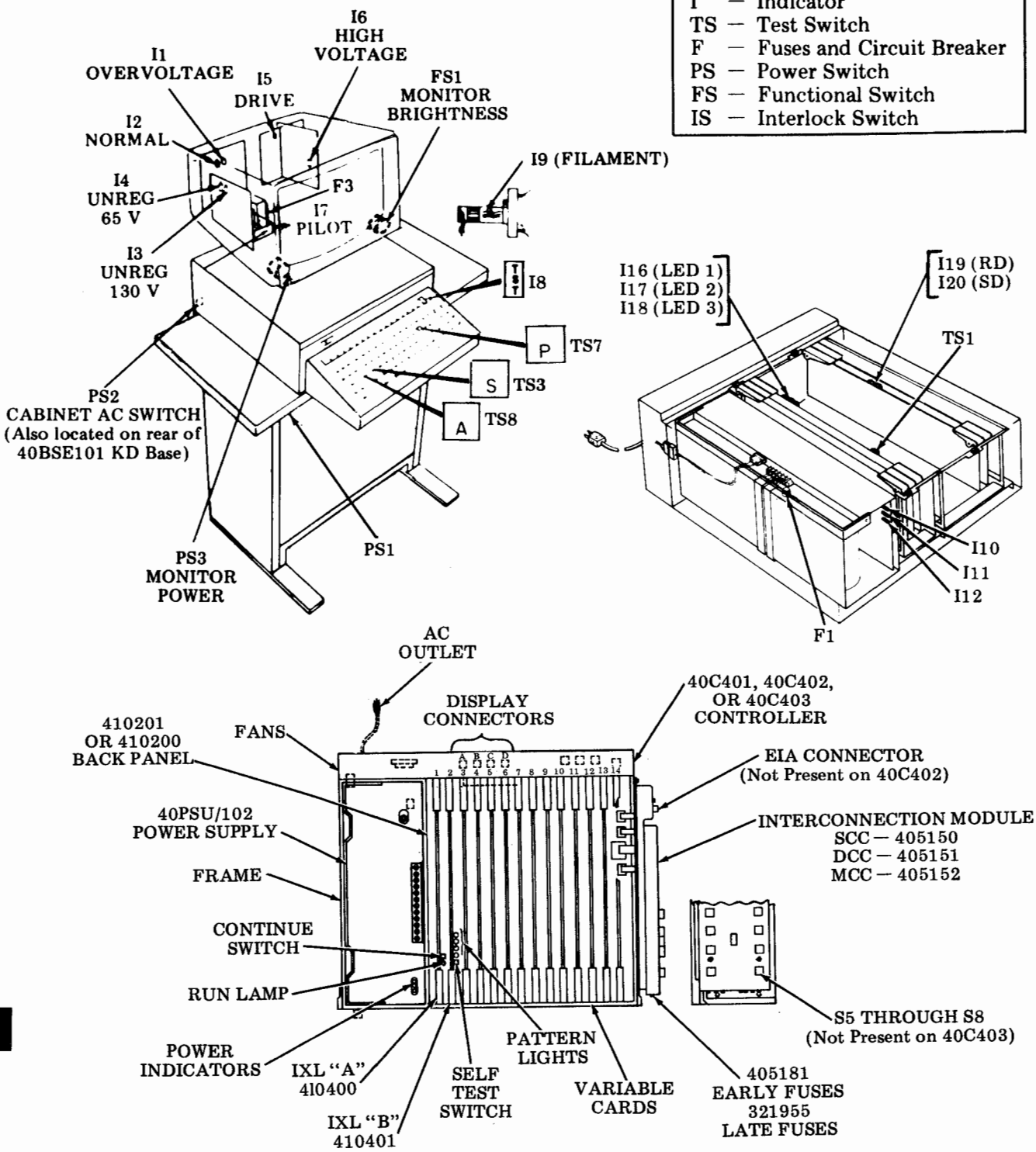

Test Switches and Indicators (Controller and KD)

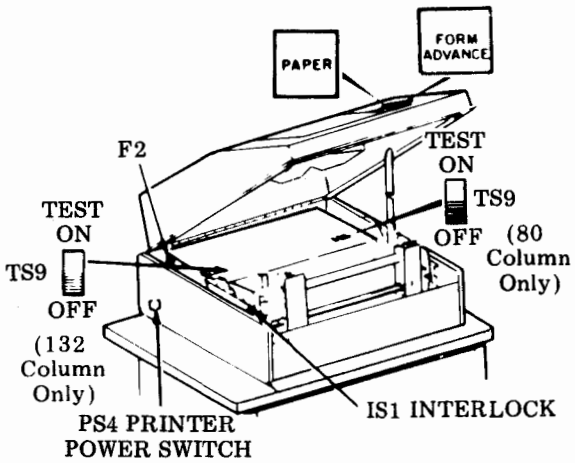

Tractor Feed Printer

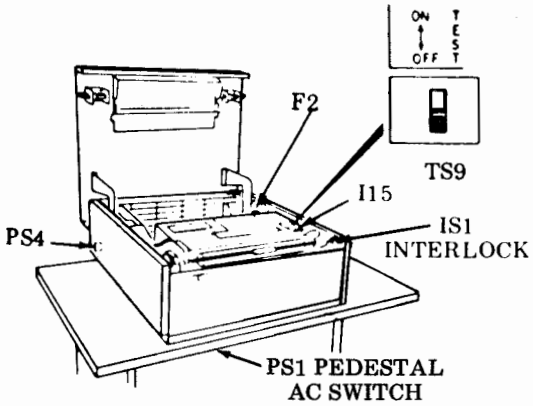

Friction Feed Printer

Test Switches and Indicators (Printer)

2. SET ANALYSIS

ANALYSIS QUESTION	"YES" RESPONSE DIRECTIVE	"NO" RESPONSE DIRECTIVE
1. Is the set a KD or KDP? (KD — Keyboard Display) (KDP — KD + Printer)	Go to 2.	Go to 34 (for station with 40C103/AE or 40C103/AD controller. Go to 46 (for station with integrated controller 40C303).
2. Do the fans turn when power is ON?	Go to 3.	Check the ac at the fan assembly connector. Ref: Part 3 Part 10 — Wiring Diagram If ac is present, replace fan assembly.
3. Does the LOCAL lamp on the opcon light when power is turned ON?	Go to 15.	Go to 4.
4 Are all three LED indicators in the power supply ON?	Go to 12.	Go to 5.
5. Are any indicators in the power supply ON?	Turn power off. Disconnect output leads of the power supply. Go to 8.	Check ac to power supply. Go to 6.
6. Is there ac present at the power supply?	Go to 7.	Replace fan assembly.

D. TROUBLESHOOTING (Cont)

2. SET ANALYSIS (Cont)

ANALYSIS QUESTION	"YES" RESPONSE DIRECTIVE	"NO" RESPONSE DIRECTIVE
7. Is the fuse blown on the power supply?	Replace fuse. If fuse continues to blow, replace power supply.	Turn power off. Disconnect output leads of the power supply. Go to 8.
8. Turn power ON. Are all three LED indicators in the power supply ON?	Turn power off. Go to 9.	Replace power supply.
9. Reconnect the dc power cable to the controller. Turn power ON. Are all three LED indicators in the power supply ON?	Turn power off. Disconnect the power cable to the controller. Go to 11.	Turn power off. Disconnect the power cable to the controller. Go to 10.
10. Reconnect the dc power cable to the display logic. Turn power ON. Are all three LED indicators in the power supply ON?	Short in controller. Turn off power. Remove all circuit cards. Turn power ON. Replace wired frame if all LEDs do not light. If all LEDs light, replace circuit cards one at a time to find shorted circuit card.	Replace power supply.
11. Reconnect the power cable to the display logic. Turn power ON. Are all three LED indicators in the power supply ON?	Replace power supply.	Short in display logic. Turn power off. Remove all circuit cards. Turn power ON. Replace wired frame if all LEDs do not light. If all LEDs light, replace circuit cards one at a time to find shorted circuit card.

ANALYSIS QUESTION	"YES" RESPONSE DIRECTIVE	"NO" RESPONSE DIRECTIVE
12. Remove opcon from cabinet. Is +12 V dc (pin 7) and -12 V dc (pin 8) present with respect to frame ground (pin 9) on opcon interface connector (P1) of logic cabinet? 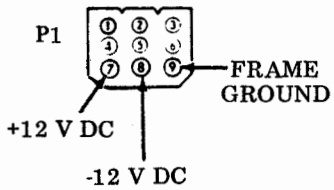	Place opcon back on mounted position. Go to 13.	Check opcon cabling.
13. Does [TST] lamp light when [RETURN] and [" ,] keys are fully depressed simultaneously? (Replace opcon if [TST] lamp does not stay lit when keys are released.)	Go to 14.	Replace opcon.
14. Does LOCAL lamp light when capital D key is depressed, and does it extinguish when CONTROL and D keys are depressed?	Replace 410675 circuit card. Replace 410674 circuit card. Replace 410672 circuit card.	Replace opcon.
15. Is the red drive lamp I5 (in display monitor) ON?	Go to 18.	Go to 16.

D. TROUBLESHOOTING (Cont)

2. SET ANALYSIS (Cont)

ANALYSIS QUESTION	"YES" RESPONSE DIRECTIVE	"NO" RESPONSE DIRECTIVE
16. Is +5 V dc present at test point ①? 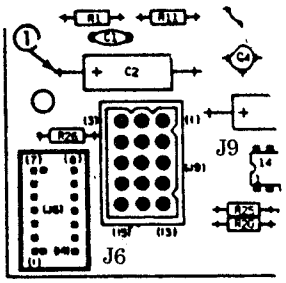	**Go to 17.** (410656 Circuit Card in Monitor)	Check wiring diagrams — Part 10.
17. Is 21K Hz present at test point ②? 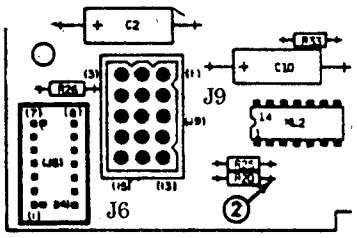 (410656 Circuit Card in Monitor)	**Replace monitor.** 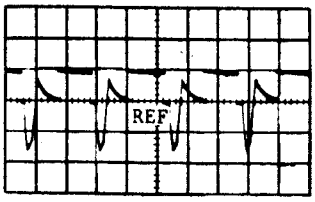 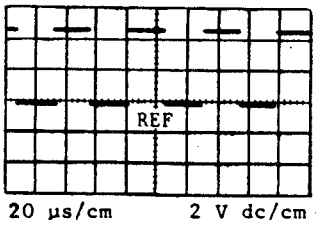 **Either waveform is correct at test point ② depending on ground configuration in display monitor and power supply.**	Replace 410855 circuit card in display logic. Check wiring diagrams — Part 10.
18. Is the red pilot lamp I7 (next to fuse on power distribution assembly in display monitor) ON?	**Go to 20.**	Check fuse (341578). **If fuse continues to fail, replace monitor.** **If fuse is good, go to 19.**

ANALYSIS QUESTION	"YES" RESPONSE DIRECTIVE	"NO" RESPONSE DIRECTIVE
19. Remove monitor. Is 115 V ac present at P14 (pin 8 to 11) in left support leg?	Replace monitor.	Check Wiring Diagrams — Part 10.
20. With the monitor OFF/ON control switch ON (ccw) and the operator brightness control to full intensity (ccw), is the raster visible?	Go to 22.	Go to 21.
21. Is the I6 high voltage lamp (on 410854) in the display monitor ON?	Check display monitor master brightness adjustment. Go to 22.	Replace the monitor.
22. Is the cursor displayed on the monitor?	Go to 25.	Go to 23.
23. Turn operator brightness to full intensity (ccw). Is raster visible?	Go to 24.	Replace monitor.
24. Depress TEST switch No. 1 (TS1) in display logic. Does a flashing vertical black bar pattern appear in the raster with no white patterns?	Replace monitor. Replace 410855 circuit card. Check wiring.	Replace 410855 circuit card. Replace 410657 circuit card. Replace 410003 circuit card.
25. In the local mode, can all data (including editing functions) be input from the opcon to the display monitor on all segments?	Go to 27.	Go to 26.

D. TROUBLESHOOTING (Cont)

2. SET ANALYSIS (Cont)

ANALYSIS QUESTION	"YES" RESPONSE DIRECTIVE	"NO" RESPONSE DIRECTIVE
26. Does the opcon pass the Local Loop-Back Test (Part 3)?	Go to Display Logic Analysis — Part 5. Go to Controller Analysis — Part 6.	**Replace opcon.**
27. Are the characters displayed on the display monitor distorted?	**Replace the monitor.** Go to Display Logic Analysis — Part 5.	**Go to 28.**
28. Do characters displayed on the monitor correspond to those generated from the opcon?	**If terminal has a PTI controller, go to 29.** **If terminal has an EIA controller, go to 30.**	Go to Display Logic Analysis — Part 5. Go to Controller Analysis — Part 6.
29. Does the PTI terminal send and receive properly with the TSG 803 Test Set?	Go back to Operational Checks.	**Go to PTI Controller Analysis — Part 6.**
30. Does the terminal have a printer?	**Go to 31.**	**Go to 33.**
31. Does the printer respond properly when the PRINT LOCAL key on the opcon is depressed?	**Go to 33.**	**Go to 32.**
32. Does the type carrier symbol (, , , or) print in every column when the printer TEST switch TS9 is ON and the printer cover is closed or the interlock switch PS5 is in the maintenance up position?	**Go to 33.**	**Replace printer.**

ANALYSIS QUESTION	"YES" RESPONSE DIRECTIVE	"NO" RESPONSE DIRECTIVE
33. Does the station perform on-line tests properly?	Go back to Operational Checks.	Go to EIA Controller Analysis — Part 6. Replace data set.
34. Does the IN SERVICE lamp on the opcon in the ROP turn ON when power is turned ON?	Go to 35.	Go to 39.
35. In an off-line mode, does the TEST (may be labeled TRANS START) lamp turn ON when the key is depressed? (The key lights when depressed and stays ON until depressed again to stop the test.)	Go to 36.	Check cabling to opcon. Replace ROP opcon. Replace ROP controller.
36. In an off-line mode, is the test pattern printed properly with no errors when the TEST (may be labeled TRANS START) key is depressed?	Go to 41.	Go to 37.
37. Does the printer turn on or run at all when the TEST (may be labeled TRANS START) key is depressed?	Replace printer. Replace ROP controller.	Go to 38.
38. Does paper advance when the red PAPER key is depressed?	Replace ROP controller.	Check SSI cable and feed through for continuity at terminals A to B and C to D on connector J102 to printer circuit card, and terminals 1 to 2 and 3 to 6 on printer connector at rear of cabinet. Replace power supply. If printer is tractor feed, check continuity of paper advance contact (connector P114, terminals 3 to 4) when switch is depressed. Replace printer. Replace ROP controller.

D. TROUBLESHOOTING (Cont)

2. SET ANALYSIS (Cont)

ANALYSIS QUESTION	"YES" RESPONSE DIRECTIVE	"NO" RESPONSE DIRECTIVE
39. Does paper advance when the red PAPER key is depressed?	Go to 40.	Check interlock switch PS5 for continuity when switch activator is down and in maintenance up positions. Friction Feed: connector J106, terminals 1 to 2. Tractor Feed: connector P114, terminals 6 to 7 and 3 to 5. Check SSI cable and feed through for continuity at terminals A to B and C to D on connector J102 to printer circuit card, and terminals 1 to 2 and 3 to 6 on printer connector at rear of cabinet. If printer is tractor feed, check continuity of paper advance contact (connector P114, terminals 3 to 4) when switch is depressed. Replace printer. Replace controller.
40. Does the type carrier symbol (, , or) print in every column when the printer TEST switch TS9 is ON and the printer cover is closed, or the interlock switch PS5 is in the maintenance up position?	Check SSI cable and feed through for continuity at terminals A to B and C to D on connector J102 to printer circuit card, and terminals 1 to 2 and 3 to 6 on printer connector at rear of cabinet. Replace opcon.	Replace printer.
41. Does paper advance when the red PAPER key is depressed?	Go to 42.	If printer is tractor feed, check continuity of paper advance contact (connector P114, terminals 3 to 4) when switch is depressed. Replace printer.
42. Does the printer have tractor feed paper drive?	Go to 43.	Go to 44.

ANALYSIS QUESTION	"YES" RESPONSE DIRECTIVE	"NO" RESPONSE DIRECTIVE
43. When the black FORM ADVANCE key is depressed, does the paper advance one form (printer FORM switch ON) or advance continuously (printer FORM switch OFF)?	Go to 44.	Check FORM ADVANCE switch for continuity when depressed (connector P114, terminals 3 to 4 and 3 to 5). Check form-out contact gap on printer. Replace printer.
44. Does the type carrier symbol (, , or) print in every column when the printer TEST switch TS9 is ON and the printer cover is closed, or the interlock switch PS5 is in the maintenance up position?	Go to 45.	Replace printer.
45. Does the station perform on-line tests properly?	Place in service.	Replace printer. Replace ROP controller. Replace data set.
46. Is IN SERVICE key lit?	Go to 47.	Make certain that plug on power cord is properly seated in power outlet. Make certain that power switch is on. If power plug is properly connected, all switches are on, and no lamps are lit, determine whether power supply in the building has failed by checking lights in the room, etc. Make certain that all connectors inside cabinet are securely mated and that printer cover is closed.

D. TROUBLESHOOTING (Cont)

2. SET ANALYSIS (Cont)

ANALYSIS QUESTION	"YES" RESPONSE DIRECTIVE	"NO" RESPONSE DIRECTIVE
46. (Cont)		Make certain PAPER alarm light is off. Go to Cabinet Analysis — Part 9. Go to Integrated Controller Analysis — Part 7.
47. Does test message print correctly when TEST (may be labeled TRANS START) key is depressed (IN SERVICE key off)?	Go to 49.	If about half of test message is replaced by font identification symbols (, etc), verify that Option 19.c. is installed. Otherwise, go to 48.
48. Does type carrier symbol print in every column when printer test switch is on and cover closed? 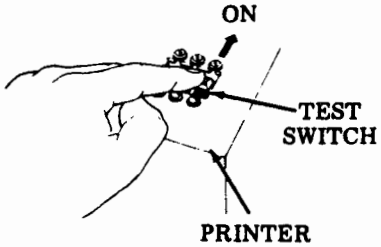 Open cover. Slide Test switch to ON position. Rethread paper through guide window in cover. Close cover. or symbols should be printed until cover is reopened (80-column tractor feed printer). Slide Test switch to OFF position. or symbols should be printed until cover is reopened (132-column tractor feed printer). Slide Test switch to OFF position.	Go to Integrated Controller Analysis — Part 7.	Replace printer.

ANALYSIS QUESTION	"YES" RESPONSE DIRECTIVE	"NO" RESPONSE DIRECTIVE
49. Are messages received on-line?	Go to 50.	Check data set and associated cables. Go to Integrated Controller Analysis — Part 7.
50. Do received messages contain errors?	Check data set and associated cables. Go to Integrated Controller Analysis — Part 7. Replace printer.	Place set in service.

3. 9140 STATION CONTROLLER ANALYSIS

ANALYSIS QUESTION	"YES" RESPONSE DIRECTIVE	"NO" RESPONSE DIRECTIVE
1. Is the test set (see note) connected to other stations on the line while trouble-shooting this station? NOTE: The test set referred to in this analysis is the remote Model 40 Station being used to send to and receive from the station under test.	Go to 2. NOTE: If an answer-back problem or misdirected message problem is reported, it might be caused by another station on the line. This procedure will show the bad answer-back or misdirected message (if that is the problem), but isolation to the faulty station may require disconnecting the other stations from the line to test set.	Go to 2. NOTE: If an answer-back problem or misdirected message problem is reported, it might be caused by another station on the line. This procedure will not show the bad answer-back or misdirected message (if that is the problem). If the reported symptom is being caused by the station under analysis, however, following this trouble analysis will isolate the problem.

D. TROUBLESHOOTING (Cont)

3. 9140 STATION CONTROLLER ANALYSIS (Cont)

ANALYSIS QUESTION	"YES" RESPONSE DIRECTIVE	"NO" RESPONSE DIRECTIVE
2. Station with ROP: IN SERVICE key must be lighted and TRANS START key must not be lit for this step. Station with KD or KDP: REC key must be lit for this step. Station with KDP: PRINT ON LINE key must be lit for this step. All stations: If any of the above conditions cannot be met, trouble is in the Model 40 Set. From test set, send EOT and CDC1. Does test set copy AB? NOTE: If 9140 Station Controller Option 17.b. is installed, then CDC1 is CDC1 character 1, CDC1 character 2, Delete.	Test set copies some character or characters. 9140 Station Controller Option 17.a. or 17.b.: Go to 3. 9140 Station Controller Option 17.c.: Replace 322013 circuit card (C2).	9140 Station Controller Option 17.a. or 17.b.: Go to 5. 9140 Station Controller Option 17.c.: Go to 4.
3. Does station modem carrier remain on after AB is sent?	Replace 322083 circuit card (G3). Also 322641 card, if used. Replace 322451 circuit card (E2). Replace 322014 circuit card (D1). Replace 322013 circuit card (C2).	Go to 14.
4. From test set, send STX, text, and EOT. Does station copy text? (Text can be a short message.)	From test set, send CDC1. Test set will not copy an AB. Go to 23.	Go to 17.

ANALYSIS QUESTION	"YES" RESPONSE DIRECTIVE	"NO" RESPONSE DIRECTIVE
5. From test set, send STX, text, and EOT. Does station copy text? (Text can be a short message.)	Go to 6.	Go to 9.
6. From test set, send TSC of the station. Does test set copy an AB? NOTE: If 9140 Station Controller Option 2.b. is installed, then TSC is TSC character 1, TSC character 2, Delete.	Replace 322013 circuit card (C2). Replace 322442 circuit card (C2-2).	KD, KDP: Go to 7. ROP: Go to 8.
7. Bypass the 9140 Station Controller by the following method: Disconnect "9140 Station Controller to data set" cable from modem. Disconnect the 9140 Station Controller X-connector interconnect cable from 9140 Station Controller and connect it to the modem. In the local mode, prepare a short message ending in EOT. Depress HOME and SEND keys. Does test set copy message without error?	Trouble is in 9140 Station Controller. Reconnect 9140 Station Controller and replace 322083 circuit card (G3). Replace 322451 circuit card (E2). Replace 322014 circuit card (D1). Replace 322013 circuit card (C2). Replace 322442 circuit card (C2-2).	Replace modem. Reconnect 9140 Station Controller.
8. Just after TSC is sent from test set, make this measurement. Measure voltage between circuit card connector E, pin A19 and connector E, pin A4. Is the voltage at E-A19 ever approximately +9 V dc (+3 V dc to +25 V dc is acceptable)? In this step a momentary positive deflection of the meter can be considered to be +9 V dc.	Replace modem. Replace 322083 circuit card (G3). Replace 322451 circuit card (E2). Replace 322014 circuit card (D1). Replace 322013 circuit card (C2). Replace 322442 circuit card (C2-2).	Replace 322083 circuit card (G3). Replace 322451 circuit card (E2). Replace 322014 circuit card (D1). Replace 322013 circuit card (C2). Replace 322442 circuit card (C2-2).

D. TROUBLESHOOTING (Cont)

3. 9140 STATION CONTROLLER ANALYSIS (Cont)

ANALYSIS QUESTION	"YES" RESPONSE DIRECTIVE	"NO" RESPONSE DIRECTIVE
9. From test set, send TSC of station. Does test set copy A/B1, A/B2? (A/B1, A/B2 is answer-back character 1 followed by answer-back character 2.)	Go to 10.	Go to 26.
10. From test set, send CDC1. Station still does not AB. From test set, send STX, text, and EOT. Does station copy text?	Replace 322013 circuit card (C2). Replace 322442 circuit card (C2-2).	Go to 11.
11. Measure voltage between circuit card connector A, pin 20 and connector A, pin 4 just after CDC1 is sent from test set. Is A20 approximately +5 V dc?	Go to 12.	Replace 322010 circuit card (A).
12. Does the voltage on circuit card connector A, pin 20 (see Step 11) stay at approximately +5 V dc? (Watch only for a minute.)	Replace 322013 circuit card (C2).	Go to 13.
13. Measure voltage between circuit card connector A, pin 10 and connector A, pin 4 just after CDC1 is sent from test set. Is voltage on A10 ever approximately +5 V dc?	Replace 322017 circuit card (F1). Replace 322013 circuit card (C2).	Replace 322013 circuit card (C2). Replace 322010 circuit card (A).
14. Was the delay in receiving AB approximately 2 seconds in Step 2?	9140 Station Controller Option 21.a. is installed. Go to 15.	Delay is not noticeable. 9140 Station Controller Option 21. b. is installed. Go to 16.
15. Does customer want 9140 Station Controller Option 21.a.?	Go to 19.	Install strap 68. If AB delay after EOT and CDC1 sent from test set is still 2 seconds, replace 322442 circuit card (C2-2).

ANALYSIS QUESTION	"YES" RESPONSE DIRECTIVE	"NO" RESPONSE DIRECTIVE
16. Does customer want 9140 Station Controller Option 21.b.?	Go to 19.	Cut strap 68. If AB delay after EOT and CDC1 sent from test set is still not 2 seconds, replace 322442 circuit card (C2-2).
17. From test set, send TSC of station. Does test set receive A/B1, A/B2?	Go to 23.	Go to 18.
18. Is any AB copied at test set in Step 17?	Go to 23.	Go to 26.
19. Was A/B1, A/B2 (answer-back character 1 followed by answer-back character 2) copied by test set in Step 2?	Go to 20.	Go to 22.
20. In addition to A/B1, A/B2, was some other character copied by the test set in Step 2?	Go to 21.	Go to 23.
21. Was the additional character received after A/B1, A/B2?	If the option for hard turn-off of the station modem carrier was selected, try some soft turn-off option. If a soft turn-off of station modem carrier was selected, replace modem or try a longer soft turn-off.	Additional character was before A/B1, A/B2. Replace station modem or try a longer squelch or clear-to-send interval at station modem.
22. Was a single character AB like NULL or a not valid two or more character AB like NULL and ACK copied by the test set?	Replace 322442 circuit card (C2-2). If trouble remains, check test set modem squelch. It may be too long (do not use 156 ms squelch).	Go to 34.
23. From test set, send text and STX. Does the station copy text? (Text must not contain the CDC or TSC of station.)	Replace 322451 circuit card (E2). Replace 322013 circuit card (C2).	Go to 24.

D. TROUBLESHOOTING (Cont)

3. 9140 STATION CONTROLLER ANALYSIS (Cont)

ANALYSIS QUESTION	"YES" RESPONSE DIRECTIVE	"NO" RESPONSE DIRECTIVE
24. From test set, send CDC1. Does test set receive AB? NOTE: Ignore Model 40 response to CDC1.	Replace 322017 circuit card (F1). Replace 322013 circuit card (C2). Replace 322010 circuit card (A).	Go to 25.
25. From test set, send text and EOT. Did station copy text without error?	Go to 43.	Go to 41. (Station copied with error or did not copy at all.)
26. Bypass 9140 Station Controller by removing "9140 Station Controller to modem" cable from modem. Disconnect the 9140 X-connector interconnect station controller cable from 9140 Station Controller and connect it to the modem. ROP: IN SERVICE key must be lighted. KD or KDP: REC key must be lighted. Send a short message from the test set. CDC and STX are not required. Does the station copy the message without error?	Go to 29. (Trouble is in the 9140 Station Controller.)	Go to 27.
27. Is the station modem a Bell System 202T Data Set?	Go to 28.	If line is ok, replace the modem. If the new modem does not pass Step 26, isolate the trouble to the proper Model 40 component.
28. Does the CO lamp light on the station 202T Data Set when the test set sends as in Step 26?	Trouble is in data set.	If the line is ok, the trouble is in the data set.

ANALYSIS QUESTION	"YES" RESPONSE DIRECTIVE	"NO" RESPONSE DIRECTIVE
29. Put the 9140 Station Controller back in the circuit by disconnecting the X-connector interconnect station controller cable from the modem and connecting it to the 9140 Station Controller. Also, connect the "9140 Station Controller to data set" cable to the modem. Turn off all power to the station. Check the three fuses in the 333669 power supply and the fuse on the 9140 Station Controller. Use an ohmmeter. Are any fuses blown? NOTE: The 333669 power supply provides dc power to the 9140 Station Controller.	Replace blown fuses. After all good fuses are reinstalled, restore power to the station. If fuse blows again, replace 333669 power supply. If fuse blows with new power supply, restore original power supply and isolate to a circuit card or the wired frame of the 9140 Station Controller.	Restore all fuses. Restore power to the station. Go to 30.
30. Check 333669 power supply outputs with voltmeter at "N" connector while "N" connector is plugged into "JN" connector of 333669 power supply. Purple wire (pin 6) is circuit common. Measure between -12 V dc and -18 V dc on blue-white wire (pin 4). Measure between +12 V dc and +18 V dc on orange wire (pin 2). Are readings within specified voltage range?	Go to 31.	Replace 333669 power supply.
31. Measure voltage between circuit card connector G, pin A1 and circuit card connector G, pin A4. Is voltage on G-A1 between +5.0 V dc and +5.5 V dc?	Go to 32.	Replace 303808 circuit card (under heat sink of 9140 Station Controller). If new circuit card does not provide proper voltage, check 9140 Station Controller wiring or replace 328812 9140 Station Controller wired frame.

D. TROUBLESHOOTING (Cont)

3. 9140 STATION CONTROLLER ANALYSIS (Cont)

ANALYSIS QUESTION	"YES" RESPONSE DIRECTIVE	"NO" RESPONSE DIRECTIVE
32. Do any CDC straps on 322010 circuit card (A) touch bottom of baud timer circuit card A-3 (piggyback on card A)? NOTE: If in doubt, follow "Yes" Response Directive.	Add 345699 insulator (if available) to bottom of piggyback card. Use electrical tape if insulator is not available.	Go to 33.
33. Check coding of CDCs, TSC, X-ON, X-OFF, ACK, and FDX INT. Does each level (1 through 7) of each character have either an "M" strap or "S" strap cut? NOTE: Each level must have one strap cut and the other strap left in.	Replace 303805 circuit card (A-3C 1050 baud) or 303839 circuit card (A-3E 1200 baud). Replace 322010 circuit card (A). Replace 322011 circuit card (B). Replace 322411 circuit card (B-1). NOTE: Remove B-1 circuit card. If station works without B-1 circuit card, then circuit card was bad. Replace 322017 circuit card (F1). Replace 322013 circuit card (C2).	Cut the proper straps.
34. Was A/B4, A/B4 (answer-back character 4 followed by answer-back character 4) received by test set in Step 2?	Go to 35.	Go to 37.
35. Measure voltage between circuit card connector E, pin 19 and circuit card connector E, pin A4. Is voltage on E-B19 about +9 V dc (from +3 V dc to +25 V dc)?	Go to 36.	Isolate trouble to Model 40 controller or 9140 X-connector interconnect cable between 9140 Station Controller and Model 40.

ANALYSIS QUESTION	"YES" RESPONSE DIRECTIVE	"NO" RESPONSE DIRECTIVE
36. Measure voltage between circuit card connector E, pin A36 and circuit card connector E, pin A4. Is voltage on E-A36 approximately +5 V dc?	Replace 322013 circuit card (C2). Replace 322442 circuit card (C2-2).	Replace 322451 circuit card (E).
37. Was A/B3, A/B3 (answer-back character 3 followed by answer-back character 3) received by test set in Step 2?	Go to 38.	Go to 40.
38. Turn off all power to the station. Is either strap 73 or 74 (or both) installed on 322442 circuit card (C2-2)?	Restore original C2 and C2-2 circuit cards. Restore all power to the station. Go to 39.	Replace 322442 circuit card (C2-2).
39. Measure voltage between circuit card connector C, pin A5 and circuit card connector C, pin A4. Is voltage on C-A5 approximately +5 V dc?	Replace 322442 circuit card (C2-2).	Replace 322442 circuit card (C2-2). Check wiring at circuit card connector C, pin A5.
40. On station equipped with printer, raise printer lid. KD or KDP: Depress LOCAL key. All stations: From test set, send CDC1. Does test set receive A/B4, A/B4 (answer-back character 4 followed by answer-back character 4)?	Replace 322442 circuit card (C2-2) if A/B1, A/B2 strapping is correct.	Replace 322442 circuit card (C2-2). Replace 322013 circuit card (C2). Replace 322011 circuit card (B).
41. Bypass 9140 Station Controller by disconnecting "9140 Station Controller to modem" cable from modem. Disconnect the 9140 X-connector interconnect cable from 9140 Station Controller and connect it to the modem. KD or KDP: REC key must be lighted. ROP: IN SERVICE key must be lighted.	Go to 42.	Isolate trouble to Model 40 controller or 9140 X-connector interconnect cable between Model 40 and 9140 Station Controller.

D. TROUBLESHOOTING (Cont)

3. 9140 STATION CONTROLLER ANALYSIS (Cont)

ANALYSIS QUESTION	"YES" RESPONSE DIRECTIVE	"NO" RESPONSE DIRECTIVE
41. (Cont) Send a short message from the test set (no CDC or STX is required). Does the Model 40 copy the message without error?		
42. If 9140 Station Controller is still bypassed, place it back in the circuit (connect Model 40 to 9140 Station Controller, and 9140 Station Controller to modem). When text 2 was sent in Step 25, did the station copy anything?	Replace 322451 circuit card (E2). Replace 322011 circuit card (B).	Replace 322017 circuit card (F1). Replace 322013 circuit card (C2). Replace 322451 circuit card (E2).
43. KD or KDP: In Step 25, did the station go to local mode upon receiving EOT? ROP or KDP: In Step 25, did the printer motor stop upon receiving EOT? NOTE: Printer paper feed out is not checked in this step.	Go to 45.	Go to 44.
44. KD or KDP: Measure voltage between circuit card connector E, pin A10 and circuit card connector E, pin A4. Is the voltage on E-A10 approximately -9 V dc (-3 V dc to -25 V dc is acceptable)? ROP: Measure voltage between circuit card connector E, pin B36 and circuit card connector E, pin B4. Is the voltage on E-B36 approximately -9 V dc (-3 V dc to -25 V dc is acceptable)?	Isolate trouble to Model 40 or the 9140 X-connector interconnect cable between Model 40 and 9140 Station Controller. NOTE: If Model 40 Option 37.b. is installed, change option to 37.a.	Replace 322451 circuit card (E2). Replace 322017 circuit card (F1).

ANALYSIS QUESTION	"YES" RESPONSE DIRECTIVE	"NO" RESPONSE DIRECTIVE
45. KD or KDP: LOCAL key is lighted. ROP: Raise printer cabinet lid. All stations: From test set, send CDC1. Does test set copy A/B4, A/B4?	Go to 48.	9140 Station Controller Option 19.a.: Go to 46. 9140 Station Controller Option 19.b.: Go to 48.
46. Did test set copy A/B1, A/B2 in Step 45?	Go to 47.	9140 Station Controller Option 17.a. or 17.b.: Replace 322442 circuit card (C2-2). Replace 322013 circuit card (C2). 9140 Station Controller Option 17.c.: Go to 48.
47. Measure voltage between circuit card connector E, pin B19 and circuit card connector E, pin B4. Is voltage at E-B19 approximately -9 V dc (-3 V dc to -25 V dc is acceptable)?	Replace 322442 circuit card (C2-2). Replace 322013 circuit card (C2).	Isolate trouble to Model 40 or the 9140 X-connector interconnect cable between Model 40 and 9140 Station Controller.
48. From test set, send TSC. Does test set copy A/B4, A/B4? NOTE: If 9140 Station Controller Option 2.b. is installed, then TSC is TSC character 1, TSC character 2, Delete.	9140 Station Controller Option 18.a.: Go to 52. 9140 Station Controller Option 18.b.: Replace 322442 circuit card (C2-2).	Go to 49.
49. Did test set receive A/B1, A/B2 in Step 48?	9140 Station Controller Option 18.a.: Replace 322442 circuit card (C2-2). 9140 Station Controller Option 18.b.: Go to 52.	Go to 50.

D. TROUBLESHOOTING (Cont)

3. 9140 STATION CONTROLLER ANALYSIS (Cont)

ANALYSIS QUESTION	"YES" RESPONSE DIRECTIVE	"NO" RESPONSE DIRECTIVE
50. Was a single character AB like NULL or a not valid two or more character AB like NULL and ACK copied by the test set?	Replace 322442 circuit card (C2-2). If trouble remains, check test set modem squelch. It may be too long (do not use 156 ms squelch).	Go to 51.
51. Measure voltage between circuit card connector D, pin B9 and circuit card connector D, pin B4 when TSC is sent from the test set. Is the voltage at D-B9 ever approximately +5 V dc? In this step, a momentary positive deflection of the meter can be considered to be +5 V dc.	9140 Station Controller Option 17.a. or 17.b.: Replace 322442 circuit card (C2-2). Replace 322013 circuit card (C2). Replace 322014 circuit card (D1). 9140 Station Controller Option 17.c.: Replace the modem. If station still does not send AB to a TSC, replace the circuit cards listed above.	Check TSC coding on 322014 circuit card (D1). If correct, replace the circuit card (D1).
52. In addition to A/B1, A/B2 (or A/B4, A/B4), was some other character copied by the test set in Step 48?	Go to 53.	Go to 54.
53. Was the additional character after the A/B1, A/B2 (or A/B4, A/B4)?	If the option for hard turn-off of station modem carrier was selected, try some soft turn-off option. If a soft turn-off of the station modem was selected, replace modem or try a longer soft turn-off.	Additional character was before A/B1, A/B2 (or A/B4, A/B4). Replace station modem or try a longer squelch or clear-to-send interval at station modem.
54. KD or KDP: Depress REC key. ROP: Lower and latch printer cabinet lid.	Go to 55.	Replace 322442 circuit card (C2-2). Replace 322013 circuit card (C2).

ANALYSIS QUESTION	"YES" RESPONSE DIRECTIVE	"NO" RESPONSE DIRECTIVE
54. (Cont) All stations: From test set, send TSC. Does test set copy A/B1, A/B2?		
55. Is station a KD or KDP? (If KD or KPD is only part of the station, treat the station as if it is a KD or KDP.)	Go to 56.	Station is an ROP. Go to 64.
56. In the local mode, prepare a short message on the display: STX, 20 or 30 "U*" characters and EOT. If cursor is not in Home position, depress HOME key. If SEND key is not lighted, depress SEND key. (If these actions cannot be performed, trouble is in Model 40 controller.) Does cursor begin moving?	Turn off all power to the station. Check that Model 40 Option 37.a. is installed, as required. If Model 40 Option 37.a. is installed, replace 410771 circuit card in KD or KDP controller. If trouble remains, isolate problem within Model 40 controller. Refer to Controller Analysis -- Part 6.	Go to 57.
57. From test set, send TSC. Does test set copy message?	Go to 58.	Go to 59.
58. Is message received at test set in Step 57 without error?	Go to 62.	Go to 61.
59. Did test set receive any AB in Step 57?	Go to 60.	Go to 61.
60. Measure voltage between circuit card connector E, pin B33 and circuit card connector E, pin B4. Is voltage at E-B33 approximately +9 V dc (+3 V dc to +25 V dc is acceptable)?	Replace 322451 circuit card (E2). Replace 322014 circuit card (D1). Replace 322442 circuit card (C2-2). Replace 322013 circuit card (C2).	Isolate to Model 40 controller or the 9140 X-connector interconnect cable between Model 40 and 9140 Station Controller.

D. TROUBLESHOOTING (Cont)

3. 9140 STATION CONTROLLER ANALYSIS (Cont)

ANALYSIS QUESTION	"YES" RESPONSE DIRECTIVE	"NO" RESPONSE DIRECTIVE
61. Depress LOCAL and HOME keys. Bypass 9140 Station Controller by disconnecting "9140 Station Controller to modem set" cable from the modem. Disconnect the 9140 X-connector interconnect cable from 9140 Station Controller and connect it to the modem. Depress SEND key. Does test set copy without error?	Trouble is in 9140 Station Controller. Reconnect 9140 Station Controller and replace 322451 circuit card (E2). Replace 322014 circuit card (D1). Replace 322011 circuit card (B). Replace 322013 circuit card (C2). Replace 322083 circuit card (G3). Replace 322442 circuit card (C2-2).	Refer to Controller Analysis -- Part 6.
62. Did cursor on Model 40 keep moving after EOT?	Refer to Controller Analysis -- Part 6.	Go to 63.
63. Does station modem carrier remain on after EOT is sent?	Replace 322083 circuit card (G3). Replace 322014 circuit card (D1). Replace 322017 circuit card (F1). Replace 322013 circuit card (C2). Replace 322451 circuit card (E2).	Go to 64.
64. Is CDC2 coded different than CDC1?	Go to 65.	Go to 70.
65. ROP: IN SERVICE key must be lighted. KD or KDP: REC key must be lighted. KDP: PRINT ON LINE key must be lighted. All stations: From test set, send CDC2. Does test set copy some answer-back?	Go to 66.	9140 Station Controller Option 17.d. or 17.e.: Check CDC2 strapping on 322010 circuit card (A). If straps are correct replace circuit card (A). 9140 Station Controller Option 17.f.: Go to 69.

ANALYSIS QUESTION	"YES" RESPONSE DIRECTIVE	"NO" RESPONSE DIRECTIVE
66. In Step 65, was answer-back A/B1, A/B2?	9140 Station Controller Option 17.d. or 17.e. is installed. Check that order calls for this option. Go to 67.	Answer-back to CDC2 must be correct if AB to CDC1 was correct. Go back to 2.
67. ROP: Raise printer cabinet lid. KD or KDP: Depress LOCAL key. All stations: From test set send EOT and CDC2. Does test set copy A/B4, A/B4?	9140 Station Controller Option 19.c. is installed. ROP: Lower and latch printer cabinet lid. KD or KDP: Depress REC key. All stations: Go to 70.	Go to 68.
68. Is 9140 Station Controller Option 19.d. installed?	ROP: Lower and latch printer cabinet lid. KD or KDP: Depress REC key. All stations: Go to 70.	Replace 322010 circuit card (A).
69. From test set, send STX, text, and EOT. Does station copy text?	Go to 70.	Check CDC2 strapping on 322010 circuit card (A). If straps are correct replace circuit card (A).
70. Is 322409 circuit card (A-1) present in 9140 Station Controller?	Go to 71.	Go to 75.
71. From test set, send CDC3. Is answer-back received at test set?	Go to 72.	9140 Station Controller Option 17.g. or 17.h.: Check CDC3 strapping on 322409 circuit card (A-1). If straps are correct, replace circuit card (A-1). 9140 Station Controller Option 17.i.: Go to 74.
72. ROP or KDP: Raise printer cabinet lid. KD or KDP: Depress LOCAL key.	ROP or KDP: Lower and latch printer cabinet lid. KD or KDP: Depress REC key.	Go to 73.

D. TROUBLESHOOTING (Cont)

3. 9140 STATION CONTROLLER ANALYSIS (Cont)

ANALYSIS QUESTION	"YES" RESPONSE DIRECTIVE	"NO" RESPONSE DIRECTIVE
72. (Cont) All stations: From test set, send EOT and CDC3. Does test set copy A/B4, A/B4?	All Stations: Go to 75.	
73. Is 9140 Station Controller Option 19.f. installed?	KD or KDP: Depress REC key. ROP or KDP: Lower and latch printer cabinet lid. All stations: Go to 75.	Replace 322409 circuit card (A-1).
74. From test set, send STX, text, and EOT. Does station copy text?	Go to 75.	Check CDC3 strapping on 322409 circuit card (A-1). If straps are correct, replace circuit card (A-1). Replace 322010 circuit card (A).
75. Is station equipped with 345625 alarm modification kit? Identify by the presence of 322641 circuit card (mounted piggyback on G3 circuit card).	Go to 76.	Go to 89.
76. KD or KDP: Depress LOCAL key. ROP or KDP: Raise printer cabinet lid. All stations: From test set, send CDC1. Does the alarm sound for approximately the time chosen in 9140 Station Controller Option 27?	Go to 79.	Go to 77.
77. Does the alarm sound at all in Step 76?	Check strapping on 322641 circuit card (piggyback on G3). If strapping is correct, replace 322641 circuit card.	Go to 78.

ANALYSIS QUESTION	"YES" RESPONSE DIRECTIVE	"NO" RESPONSE DIRECTIVE
77. (Cont)	Replace 322083 circuit card (G3).	
78. Remove black clip-on wire from circuit card connector G, pin B33. Touch it to circuit card connector G, pin B4. Does the alarm sound?	Restore black wire to pin B33 on connector G. Replace 322641 circuit card (piggy-back on G3 circuit card). Replace 322083 circuit card (G3).	Replace 345626 Alarm Assembly.
79. KD or KDP: Depress REC key. ROP or KDP: Lower and latch printer cabinet lid. All stations: Is 9140 Station Controller Option 1. h. (FDX INT) used in the system the station is part of?	Go to 80.	Go to 89.
80. From test set, send CDC1. Test set copies A/B1, A/B2 if 9140 Station Controller Option 17.a. or 17.b. is used. From test set send STX, text, FDX INT, and CDC1. Does test set copy A/B1, A/B2 after FDX INT and CDC1?	Go to 83.	Go to 81.
81 Did test set receive A/B3, A/B3 in Step 80?	Replace 322442 circuit card (C2-2). Replace 322641 circuit card (piggyback on G3). Replace 322411 circuit card (B-1).	Go to 82.
82. Does test set copy any AB?	Check A/B3 strapping on 322442 circuit card (C2-2). If strapping is correct, replace C2-2 circuit card.	9140 Station Controller Option 17.a. or 17.b.: Check FDX INT strapping on 322013 circuit card (C2). Replace 322013 circuit card (C2). Replace 322014 circuit card (D1).

D. TROUBLESHOOTING (Cont)

3. 9140 STATION CONTROLLER ANALYSIS (Cont)

ANALYSIS QUESTION	"YES" RESPONSE DIRECTIVE	"NO" RESPONSE DIRECTIVE
82. (Cont)		9140 Station Controller Option 17.c.: Go to 83.
83. From test set, send EOT and CDC1. Does test set copy A/B1, A/B2?	Go to 84.	9140 Station Controller Option 17.c.: Go to 84. 9140 Station Controller Option 17.a. or 17.b.: Station should have failed other tests. Go to 2.
84. From test set, send STX, text (with parity error), FDX INT, and CDC1. Does test set copy A/B3, A/B3?	Go to 85.	9140 Station Controller Option 20.b. or 20.d. must be installed. Replace 322442 circuit card (C2-2). Replace 322641 circuit card (piggyback on G3). Replace 322411 circuit card (B-1).
85. From test set, send STX, FDX INT, and CDC1. Does test set copy A/B3, A/B3?	9140 Station Controller Option 27.d.: Replace 322641 circuit card (piggyback on G3). 9140 Station Controller Option 27.e.: Go to 87.	Go to 86.
86. Was the AB received in Step 85 A/B1, A/B2?	9140 Station Controller Option 27.d.: Go to 87. 9140 Station Controller Option 27.e.: Replace 322641 circuit card (piggyback on G3). Replace 322442 circuit card (C2-2).	Replace 322641 circuit card (piggyback on G3). Replace 322442 circuit card (C2-2).

ANALYSIS QUESTION	"YES" RESPONSE DIRECTIVE	"NO" RESPONSE DIRECTIVE
87. From test set, send EOT and CDC1. AB from station depends on 9140 Station Controller Option 17. From test set, send STX, text (with parity error), FDX INT, and CDC1. Test set copies A/B3, A/B3. From test set send EOT and CDC1. Does test set copy A/B1, A/B2?	Go to 89.	9140 Station Controller Option 17.a. or 17.b.: Go to 88. 9140 Station Controller Option 17.c.: Go to 90.
88. Does test set copy A/B3, A/B3 in Step 87?	Replace 322442 circuit card (C2-2). Replace 322641 circuit card (piggyback on G3).	Station should have failed other steps also. Go to 2.
89. From test set send EOT. Is LOCAL key lighted at station? NOTE: LOCAL key may already be lighted.	Depress REC key. Go to 90.	Go to 90.
90. From test set, send EOT and CDC (where CDC is another station CDC). If station is receiving messages directed to another station, the other station CDC should be tried in this step. The other station must not be connected to the test set. Does the test set copy an AB?	Check CDC coding on 322010 circuit card (A) and 322409 circuit card (A-1), if present. If both M and S straps of some level (1 through 7) are cut, that is the problem. If coding is correct, replace 322010 circuit card (A). Replace 322409 circuit card (A-1), if present.	Go to 91.
91. From test set, send STX, text, and EOT. Does station copy text?	Check CDC coding on 322010 circuit card (A) and 322409 circuit card (A-1), if present. If both M and S straps of some level (1 through 7) are cut, that is the problem. If coding is correct, replace 322010 circuit card (A). Replace 322409 circuit card (A-1), if present.	Go to 92.

D. TROUBLESHOOTING (Cont)

3. 9140 STATION CONTROLLER ANALYSIS (Cont)

ANALYSIS QUESTION	"YES" RESPONSE DIRECTIVE	"NO" RESPONSE DIRECTIVE
92. Is KD or KDP part of the station?	Go to 93.	Station is an ROP. Go to 94.
93. From test set, send EOT and TSC (where TSC is another station TSC). If the station is sending a response to another station TSC, the other station TSC should be tried in this step. The other station must not be connected to the test set. Does the test set copy an AB?	Check the TSC coding on 322014 circuit card (D1). If both M and S straps of some level (1 through 7) are cut, that is the problem. If coding is correct, replace 322014 circuit card (D1).	Go to 94.
94. Is the station part of a system that uses "break" operation to deselect receivers and/or halt senders? NOTE: "Break" is a 300 ms space sent from the computer modem.	Go to 95.	"Break" is not used in this system. Place station in service.
95. Does the station contain a KD or KDP?	Go to 96.	Station is an ROP. Go to 97.
96. With a long message on the display and the SEND key lighted, send TSC from the test set. After the test set begins receiving, send a break signal from the test set. Does the station cursor stop, REC key light, and SEND key light go out?	Place station in service.	Go to 98.
97. From test set, send EOT and CDC1. Printer motor will start. Disregard AB. Send a break signal from the test set. Does the printer motor stop?	Place station in service. KDP printer motor stops immediately (Model 40 Option 53.b.) or after a 2-minute delay (Option 53.a.).	Go to 98.

ANALYSIS QUESTION	"YES" RESPONSE DIRECTIVE	"NO" RESPONSE DIRECTIVE
98. Depress LOCAL, HOME, and SEND keys. From test set, send TSC. After the test set begins receiving, it sends a break signal. While "break" is being sent, measure voltage between circuit card connector D, pin B36 and circuit card connector D, pin B4. Is the voltage at D-B36 ever approximately +12 V dc? NOTE: A momentary positive deflection of the meter can be considered to be +12 V dc.	Isolate trouble to the 9140 X-connector interconnect cable between Model 40 and 9140 Station Controller, or 410771 circuit card (KD or KDP controller), or Model 40 controller (all stations).	Voltage is approximately 0 V dc. Replace 322014 circuit card (D1). Replace 322013 circuit card (C2). Replace 322451 circuit card (E1).

4. MODEL 40/4 MINI- AND MAXI-STATION ANALYSIS

ANALYSIS QUESTION	"YES" RESPONSE DIRECTIVE	"NO" RESPONSE DIRECTIVE
1. Are all power supply voltage indicators lit?	Go to 2.	Refer to Part 4, 40PSU102 Power Supply Analysis.
2. Is run lamp on or blinking and 1st pattern lamp (toward rear of controller) on 410401 circuit card dimly lit when controller is not in test mode?	Go to 3 (if run lamp is blinking). 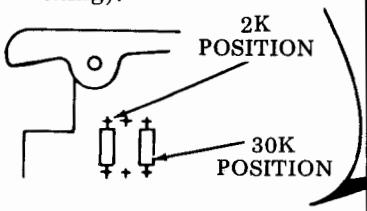 4108NN CARD 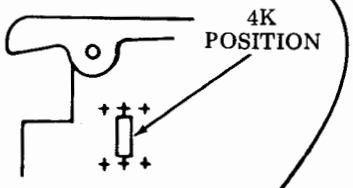 4109NN CARD	Perform steps below one at a time until problem is corrected. a. 40PSU102 Power Supply Analysis, Part 4. b. If used: Check 4108NN circuit card(s) in controller for required strap positions "2K" and "30K". Strap can be 22 AWG wire. c. If used: Check 4109NN circuit card(s) in controller for required strap in position "4K". Strap can be 22 AWG wire. d. Refer to Part 6, Controller Logic Analysis.

D. TROUBLESHOOTING (Cont)

4. MODEL 40/4 MINI- AND MAXI-STATION ANALYSIS (Cont)

ANALYSIS QUESTION	"YES" RESPONSE DIRECTIVE	"NO" RESPONSE DIRECTIVE
3. Is run lamp blinking when controller is not in test mode?	Go to 4 (if run lamp is steadily on). *Note:* If removal of SSI cable to another controller corrects the problem, that controller may be at fault.	Perform steps below one at a time until problem is corrected. a. Remove SSI cables to opcons and other controller(s) one at a time (connectors at right side of controller). (See Note.) b. Replace 410406 circuit card. c. Replace 410200 or 410201 back panel.
4. Depress and hold test switch. Do all pattern lamps light?	Go to 5.	Replace in order: 410401 circuit card, repeat Step 4. 410400 circuit card, repeat Step 4. 4108NN or 4105NN circuit card(s), repeat Step 4. All other circuit cards until defective circuit card is found.
5. Release test switch. Does controller pass self-test? This includes display patterns when checking DCC or MCC.	Go to 6. *Note:* If display pattern appears with errors or is distorted, replace associated D I/O 41043N circuit card.	Replace circuit card indicated by pattern lamps, however, if more than one trouble pattern appears, replace card indicated by last trouble pattern first. Repeat Step 5.
6. Does the local test work? (CTRL (or ALPHA) and L/TST keys on opcon.)	Go to 8.	Go to 7.
7. Depress the LOCAL (or RESET) key on the opcon. Is the LOCAL indicator lit?	Check the cabling from the opcon to DCC, the DCC to SCC, and the DCC to monitor (or opcon to MCC) as applies.	Refer to Part 3, Opcon Analysis.

ANALYSIS QUESTION	"YES" RESPONSE DIRECTIVE	"NO" RESPONSE DIRECTIVE
8. In the local mode, do all keys on the opcon function properly? Refer to KD Local Test.	Go to 9.	Replace opcon. Replace 410406 circuit card interfacing opcon in trouble.
9. Input data on the monitor. Depress PRINT LOCAL key. Does the print local printer print the data properly?	Go to 10.	Check cables. Replace printer. Replace associated SSI 410406 circuit card.
10. Does the station pass the on-line checkout.	Place in service.	Go to 11.
11. Do RD lamps flash on 410408, 410409, or 410411 circuit card during polling or selecting?	Go to 12.	Check data set options. Check data set and data set cable (EIA pin 3).
12. Does RS lamp light on data set after polling or selecting?	Go to 13.	Check data set cable (EIA pin 4). Replace 410408, 410409, or 410411 circuit card (as applies).
13. Does CS lamp light on data set after polling or selecting?	Go to 14.	Check data set or data set options.
14. Do SD lamps flash on 410408, 410409, or 410411 circuit card after polling or selecting?	a. Check data set. b. Check data set cable (EIA pin 2). c. Replace 410408, 410409, or 410411 circuit card (as applies).	Check data set cable (EIA pin 5). Replace 410408, 410409, or 410411 circuit card (as applies).

OPCON OR PRINTER CONNECTED TO SSI	ASSOCIATED 410406
PORTS 1 THROUGH 4	IN CARD POS 5 OR 7
PORTS 5 THROUGH 8	IN CARD POS 4 OR 6 OR 8

5. MODEL 40/4 SINGLE DISPLAY STATION ANALYSIS

ANALYSIS QUESTION	"YES" RESPONSE DIRECTIVE	"NO" RESPONSE DIRECTIVE
1. Are all power supply voltage indicators lit?	Go to 2.	Go to 40PSU101 Power Supply Analysis.
2. Depress and hold SELF-TEST switch. Do all three pattern lamps (LEDs) on 410251 light?	Go to 3.	40PSU101, see Power Supply Analysis. If power supply voltages are correct will all controller cards installed, replace 410251 circuit card. If problem remains, replace controller cards one at a time and repeat Step 2 until defective card is found.

D. TROUBLESHOOTING (Cont)

5. MODEL 40/4 SINGLE DISPLAY STATION ANALYSIS (Cont)

ANALYSIS QUESTION	"YES" RESPONSE DIRECTIVE	"NO" RESPONSE DIRECTIVE
2. (Cont)		If all replacement cards together do not allow LEDs to light, disconnect opcon, monitor, data set (or data auxiliary set), and printer cables from back panel; then repeat Step 2. If disconnecting a cable corrects problem, cable or device at other end is at fault. If LEDs still do not light, replace back panel.
3. Release SELF-TEST switch. Does controller pass self-test? (See Note below.) This includes display patterns of Page 169. (See Note in "Yes" column.) *Note:* Trouble patterns of controller arrangement forms are given on Page 229. When the card indicated by the trouble pattern on Page 229 is replaced, but the trouble remains, then the patterns given in the "NO" RESPONSE DIRECTIVE column of this question apply.	Go to 4. *Note:* If display pattern appears with errors or is distorted, replace 410286 circuit card and repeat Steps 2 and 3. If 410286 circuit card does not correct a display pattern, replace 410287 circuit card and repeat Steps 2 and 3. Legend for trouble patterns: ● LED 1 ● LED 2 ● LED 3 Front of 410251 circuit card	Replace circuit card indicated by trouble pattern of applicable controller arrangement form. If more than one trouble pattern appears, replace card indicated by last trouble pattern first. Repeat Steps 2 and 3. If indicated card does not pass, repeat Steps 2 and 3, then follow applicable procedure below: ●●● a. Replace 410261 circuit card, repeat Steps 2 and 3. b. Remove all circuit cards, except 410251 and 410261, repeat Steps 2 and 3. If only middle LED is lit, then replace 410251 or 410261 circuit card, otherwise replace back panel. ●●○ a. Replace 410251 circuit card, repeat Steps 2 and 3. b. Follow b. entry of ●●● ○●○ a. Replace 410251 circuit card, repeat Steps 2 and 3. b. Replace back panel. ○●○ a. Replace 410251 circuit card, repeat Steps 2 and 3. b. Replace back panel.

Controller Arrangement Forms

Identification of SDC arrangements is provided in this part. Controller Arrangement Forms are also provided and discussed.

The Controller Arrangement Forms of this part include a duplicate of the form which should be kept with the Single Display Station (SDS). The form should be filled out in pencil and kept current by the craftsperson. A filled out form is required when performing the actions of installation. The purpose of the form is to provide: Location and type of circuit cards required, controller and printer options selected, and required cable connections to controller.

Controller Arrangement Identification

Single Display Controller (SDC) Arrangements:

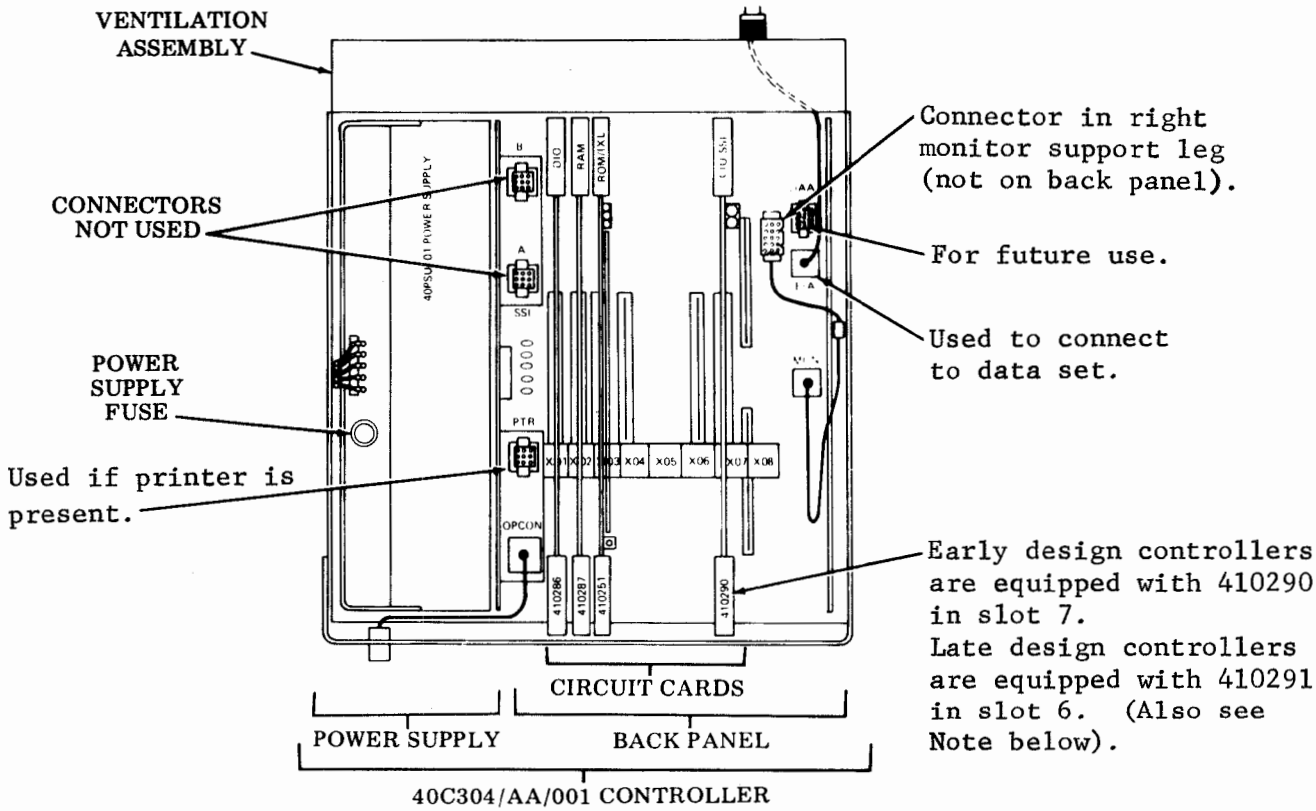

NOTE: This part uses the term "early design controller" to mean a controller equipped with a 410276 back panel, 410290 circuit card, and a 410261 Issue 3A (or earlier) circuit card. A late design controller is equipped with a 410277 back panel, 410291 Issue 4A (or later) circuit card. The controller arrangement forms provide conversion and compatibility information.

APPLICATION	CIRCUIT CARD POSITION (All card numbers preceded by 410)									REFERENCE PAGE NO.
	1	2	3†	4	5	6	7	8	9	
Early Design	286	287	251	—	—	—	290	—	NA	12
Late Design	286	287	251	—	—	291	—	—	—	10

† The 410261 ROM circuit card is always piggybacked to the 410251 circuit card in Position 3.

D. TROUBLESHOOTING (Cont)

5. MODEL 40/4 SINGLE DISPLAY STATION ANALYSIS

Interpretation of Controller Arrangement Forms

This paragraph consists of examples of how a Controller Arrangement Form for the early design controller can be filled out (a form for the late design can be filled out in a similar manner).

Example:

Form applies if controller is early design (printer may be present).

TYPE OF CONTROLLER

SDC — Controller Arrangement Form

Application: Display, printer (may be present). Early Design

This area lists circuit cards present and their respective locations in the controller.

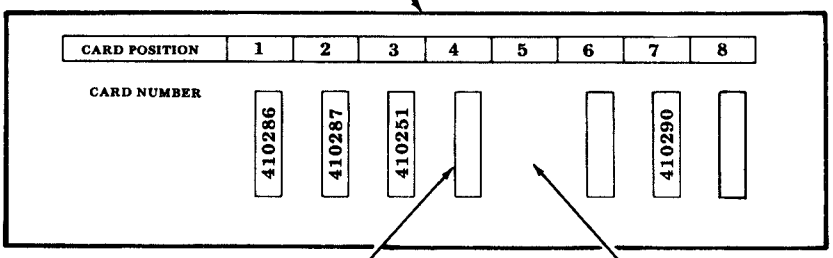

Blank indicates no card present (card connector is present).

Slot 5 has no card connector (and no card).

The area below the circuit card listing shows the trouble patterns that may occur in the pattern lights at the rear of the 410251 card.

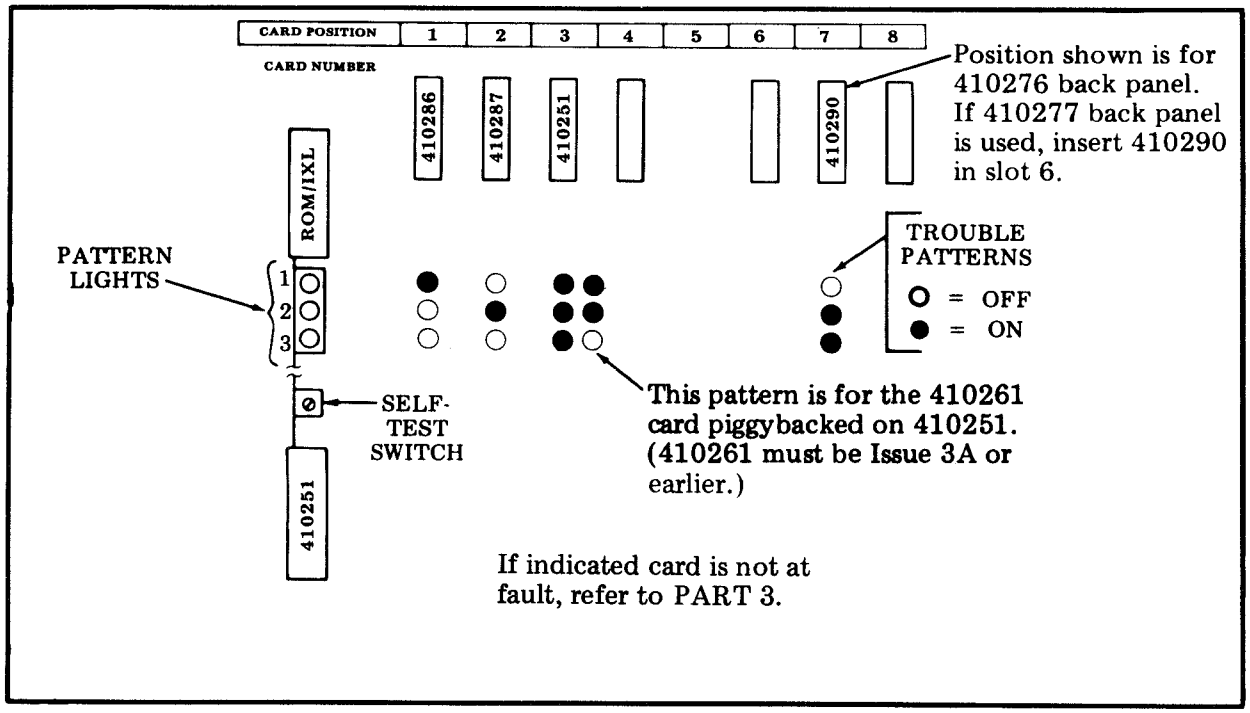

ANALYSIS QUESTION	"YES" RESPONSE DIRECTIVE	"NO" RESPONSE DIRECTIVE
3. (Cont)		a. Replace 410287 circuit card, repeat Steps 2 and 3. b. Replace back panel.
4. Does the local test work? (CTRL and S keys on 40K104, L/TST and ALPHA on 40K105.)	Go to 6.	Go to 5.
5. Depress the LOCAL key on the opcon. Is the local lamp lit?	Check the cable between the controller and opcon.	Go to Opcon Analysis.
6. In the local mode, do all keys on the opcon function properly?	Go to 7.	Replace opcon. Replace 410290 circuit card.
7. Input data on the monitor. Depress PRINT LOCAL. Does the print local printer print data properly?	Go to 8.	Check cable between the controller and printer. Replace printer. Replace 410291 (or 410290) circuit card. Also see Step 8 of Printer Local Test Procedures.
8. Does the station pass the on-line checkout?	Place in service.	Go to 9.
9. Does RD LED on 410290 circuit card flash during polling or selecting?	Go to 10.	Check data set options. Check data set cable (EIA pin 3‡) or data auxiliary set cable. Replace data set.
10. Does RS lamp on data set light after polling or selecting?	Go to 11.	Check data set cable (EIA pin 4‡) or data auxiliary set cable. Replace 410291 (or 410290) circuit card.
11. Does CS lamp on data set light after polling or selecting?	Go to 12.	Check data set options. Replace data set.
12. Does SD LED on 410290 circuit card flash after polling or selecting?	a. Check data set. b. Check data set cable (EIA pin 2 ‡) or data auxiliary set cable. c. Replace 410290 circuit card.	Check data set cable (EIA pin 5‡) or data auxiliary set cable. Replace 410291 (or 410290) circuit card.

‡EIA pin number applies to the data set end.

D. TROUBLESHOOTING (Cont)

5. MODEL 40/4 SINGLE DISPLAY STATION ANALYSIS (Cont)

40MN101 MONITOR ANALYSIS

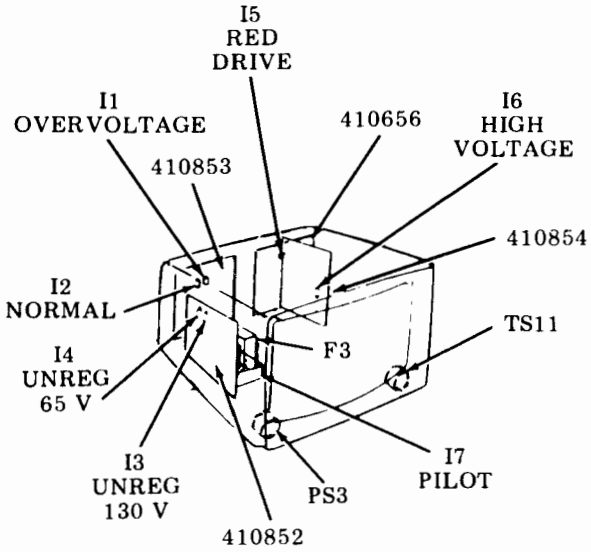

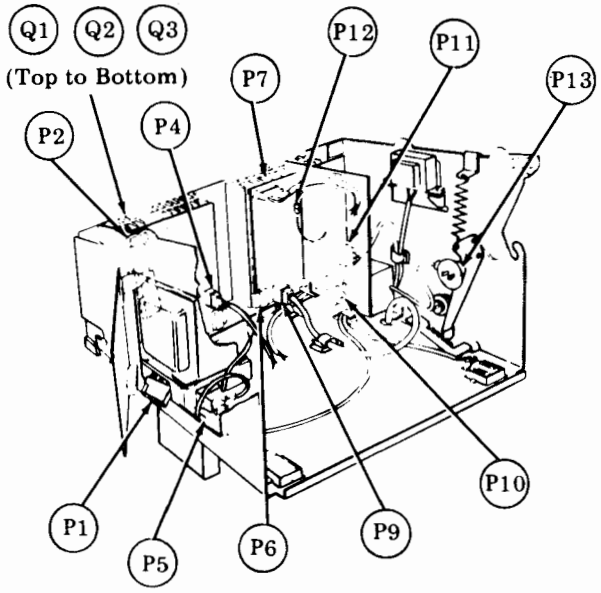

ANALYSIS QUESTION	"YES" RESPONSE DIRECTIVE	"NO" RESPONSE DIRECTIVE
1. Is red drive lamp I5 lit?	Go to 2.	Check cable between controller and monitor. 410286 circuit card in controller. 410656 circuit card in monitor.
2. With PS1 and PS2 on, is pilot I7 lit?	Go to 3.	Check 341578 fuse, F3 (1.4 SL-BL) and cables.
3. Are I4 and I3 lit?	Go to 4.	Replace 410852 circuit card.
4. Is I2 lit?	Go to 5.	Replace 410853 circuit card. Replace Q1.
5. Is I1 lit?	410853	Go to 6.
6 Is I6 lit?	See Note below.	Replace 410854 circuit card. Replace 410656 circuit card.

NOTE: If 19 (CRT filament) is not lighted or if problem still exists in the monitor, go to Section 2, for detailed trouble analysis.

OPCON ANALYSIS

NOTE: Start with Question 1, if typewriter style opcon is present. Start with Question 4, if internal numeric cluster style opcon is present.

ANALYSIS QUESTION	"YES" RESPONSE DIRECTIVE	"NO" RESPONSE DIRECTIVE
1. Depress ERASE INPUT and QUOTES keys together (see Note). Does TST indicator remain lit when keys are released?	Go to 2.	Check for +12 V and -12 V to opcon. Refer to Section 3. Replace opcon.
	Note: If lamps flash, clear by depressing ERASE INPUT T and P keys, then repeat no. 1.	
2. Do the following: (See Note 1 at right.) (See Note 2 at right.)		*Note 1:* Ignore any characters that may be displayed during this test. *Note 2:* If opcon has CAPS LOCK key, when depressing A, C or F, CAPS LOCK key must be in latched position (ON) or SHIFT must be depressed. If opcon has no CAPS LOCK key, do not depress SHIFT.

Depress Keys		Indicator	
		Key	Condition
SHIFT	A	S/R	ON
CTRL	R/TST		OFF
SHIFT	C	LOCAL	ON
CTRL	C		OFF
SHIFT	F	PRINT LOCAL	ON
CTRL	\		OFF
	→	LOCAL	FLASH
CTRL	C		OFF

a. Is the 40K104 opcon a late design?	Interface/bell card not present. Go to 2.b.	Interface/bell card present. Go to 2.c.
Note: Late design opcons are sometimes called OPCON II and have a single card of new design. To check the vintage of an opcon, it is sufficient to remove opcon from cabinet (or base) and look through the slot at the rear for the interface/bell card.		

D. TROUBLESHOOTING (Cont)

5. MODEL 40/4 SINGLE DISPLAY STATION ANALYSIS (Cont)

OPCON ANALYSIS (Cont)

ANALYSIS QUESTION	"YES" RESPONSE DIRECTIVE	"NO" RESPONSE DIRECTIVE
2. (Cont)		
b. On late design 40K104 opcon (interface/bell card not present), fully depress ERASE INPUT. Does the alarm sound repeatedly as long as the key is depressed? *Note:* The alarm loudness control may require adjustment to hear the tone.	Go to 3.	Replace opcon.
c. Do all indicators operate as described?	Depress ERASE INPUT and P keys together to terminate test. TST indicator light goes out.	Replace opcon.
3. Does the opcon fail to generate proper characters?	Replace opcon.	Opcon OK.
4. Depress CONSOL TEST and LINE INSERT keys (fully depress LINE INSERT) together. Does CONSOL TEST indicator remain lit when keys are released?	Opcon is in loopback mode. Go to 5.	Check for +12 V and -12 V to opcon. Refer to Section 3. Replace opcon.
	Note: If lamps flash or the alarm sounds, clear by depressing CONSOL TEST and RESET keys, then repeat Question 4 (use RESET adjacent to PF1).	
5. Do the following in the order given.		

Depress key(s)	Indicator		Notes
	Key	Condition	
A	S/R	On	
C	LOCAL	On	If entered loopback mode from LOCAL, LOCAL is already on.
M	INPUT INHIBIT	On	
F	PRINT LOCAL	On	

ANALYSIS QUESTION	"YES" RESPONSE DIRECTIVE	"NO" RESPONSE DIRECTIVE
5. (Cont)		

Depress key(s)	Indicator		Notes
	Key	Condition	
I	NUM LOCK	On	
R/TST	S/R	Flashing On & Off	Depress only R/TST.
(Cursor right) →	LOCAL	Flashing On & Off	
LINE DLETE	INPUT INHIBIT	Flashing On & Off	
L/TST	PRINT LOCAL	Flashing On & Off	Depress only L/TST.
NUM LOCK	NUM LOCK	Flashing On & Off	
ALPHA & A	S/R	On (no flash)	
ALPHA & C	LOCAL	On (no flash)	
ALPHA & M	INPUT INHIBIT	On (no flash)	
ALPHA & F	PRINT LOCAL	On (no flash)	
ALPHA & I	NUM LOCK	On (no flash)	
NUM & R/TST	S/R	Off	LOCAL cannot be turned off while in loopback mode.
ERASE INPUT	INPUT INHIBIT	Off	PRINT LOCAL cannot be turned off while in loopback mode.
TAB	NUM LOCK	Off	Depress TAB, not CURSR TAB.
R/TST	S/R	Flashing On & Off	Depress only R/TST.
ALPHA & R/TST	S/R	Off	

D. TROUBLESHOOTING (Cont)

5. MODEL 40/4 SINGLE DISPLAY STATION ANALYSIS (Cont)

OPCON ANALYSIS (Cont)

ANALYSIS QUESTION	"YES" RESPONSE DIRECTIVE	"NO" RESPONSE DIRECTIVE
5. (Cont)		

Depress key(s)	Indicator		Notes
	Key	Condition	
CONSOL TEST	(See note to the right)		Opcon attention bell sounds repeatedly as long as key is depressed.

Do all indicators and bell operate as described?	Depress CONSOL TEST and RESET (adjacent to PF1) keys together to terminate test. CONSOL TEST indicator goes out. Go to 6.	Replace opcon.
6. Does the following occur? a. CONSOL TEST indicator goes out, b. PRINT LOCAL indicator goes out, c. LOCAL indicator stays on.	All three conditions are met. Go to 7.	Replace opcon.
7. Does the opcon fail to generate proper characters?	Replace opcon.	Opcon is OK.

40PSU101 POWER SUPPLY ANALYSIS

ANALYSIS QUESTION	"YES" RESPONSE DIRECTIVE	"NO" RESPONSE DIRECTIVE
1. With the set plugged in and power ON, are all LED indicators ON?	All LEDs are on. Go to 2.	At least one LED is off. Go to 3.
2. Are all voltages correct at the output terminal block? Check voltage using a voltmeter having 20,000 ohms volt sensitivity.	The power supply is OK.	Turn off all power. Remove all connections from back panel. Retighten all power supply connector screws (back panel is not connected to power supply now). Turn on power. Go to 6.
3. Are the ventilation fans in the electronics module moving air?	Go to 4.	Check ac power input power switch(es), cabinet ac wiring and ac connectors.
4. Turn off power. Is main fuse on the power supply blown?	Replace fuse, turn on power and go to 5. (129920 fuse, 5 amp SL-BL)	Replace power supply. If not on customer premises, go to Note following chart.
5. Turn off power. Did main fuse blow again?	Disconnect cable from back panel. Replace fuse, turn on power, and check output voltages.	Replace power supply. If not on customer premises, go to Note following chart.

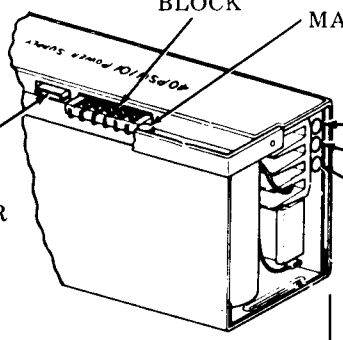

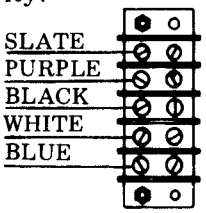

Warning: Wire colors of cable connecting to block are different from the wire colors of cable used in Model 40/1, 40/2, and 40/3.

D. TROUBLESHOOTING (Cont)

5. MODEL 40/4 SINGLE DISPLAY STATION ANALYSIS (Cont)

40PSU101 POWER SUPPLY ANALYSIS (Cont)

ANALYSIS QUESTION	"YES" RESPONSE DIRECTIVE	"NO" RESPONSE DIRECTIVE
5. (Cont)	If no output voltages are present and fuse blows again, replace power supply. If not on customer premises, go to Note following Step 7. If output voltages are present (power supply OK), go to 6.	
6. Are all voltages correct at the output terminal block? *Note:* See Question 2 for values.	Turn off power. Reconnect all leads from back panel. Remove all circuit cards from back panel. Turn power on. Go to 7.	Replace power supply. If not on customer premises, go to Note following chart.
7. Are all voltages at output terminal block now correct?	Turn off power. Reinstall one circuit card that was removed in 6. Turn on power. Repeat 7 until voltage not correct. Card causing problem is at fault.	Replace back panel. Replace power supply. If not on customer premises, go to Note following chart.

NOTE: When the power supply is shown to be at fault, refer to Part 4 of this manual.

E. WIRING DIAGRAMS

The following wiring diagrams are provided (in this section) for reference and troubleshooting.

Description	Page
KDP Set for Switched Network Application or Equipped With 9140 Station Controller	240
KDP Set -- Teletypewriter Compatible	244
Maxi- and Mini-Cluster Arrangements	245
Single-Display Station Arrangements	261
ROP Cabinet	277
Printer Cabinets	290

Additional wiring information on the various Model 40 components is provided in the sections of this manual covering the specific components. For wiring information beyond the scope of this manual, the wiring diagram packages are listed in Part 1-4, B.2 Wiring Diagram Package (WDP) Listing, available from Teletype Corporation.

Description	References
40PSU101 and 40PSU102 Power Supply	Part 4 of this manual.
40K001, 40K003, 40K004, 40K101, 40K104, 40K105, and 40K203 Operator Console	Part 3 of this manual.
40MN101, and 40MN102 Display Monitor	Part 2 of this manual.
40P101, 40P102, 40P151, 40P153, 40P154, 40P201, 40P202, 40P203, and 40P253	Manual 355

E. WIRING DIAGRAMS (Cont)

KDP Set for Switched Network Application or Equipped With 9140 Station Controller (Adjacent Printer)

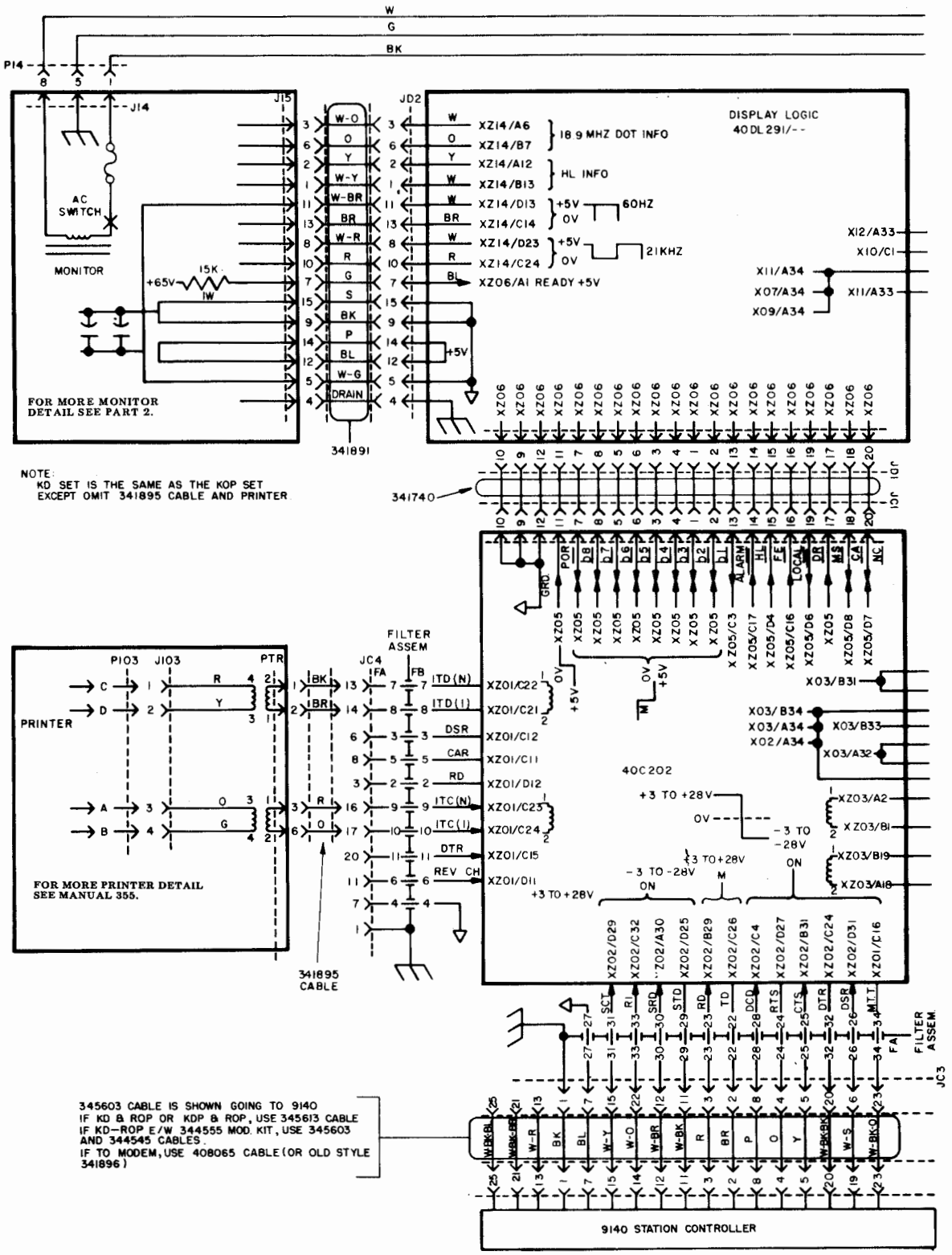

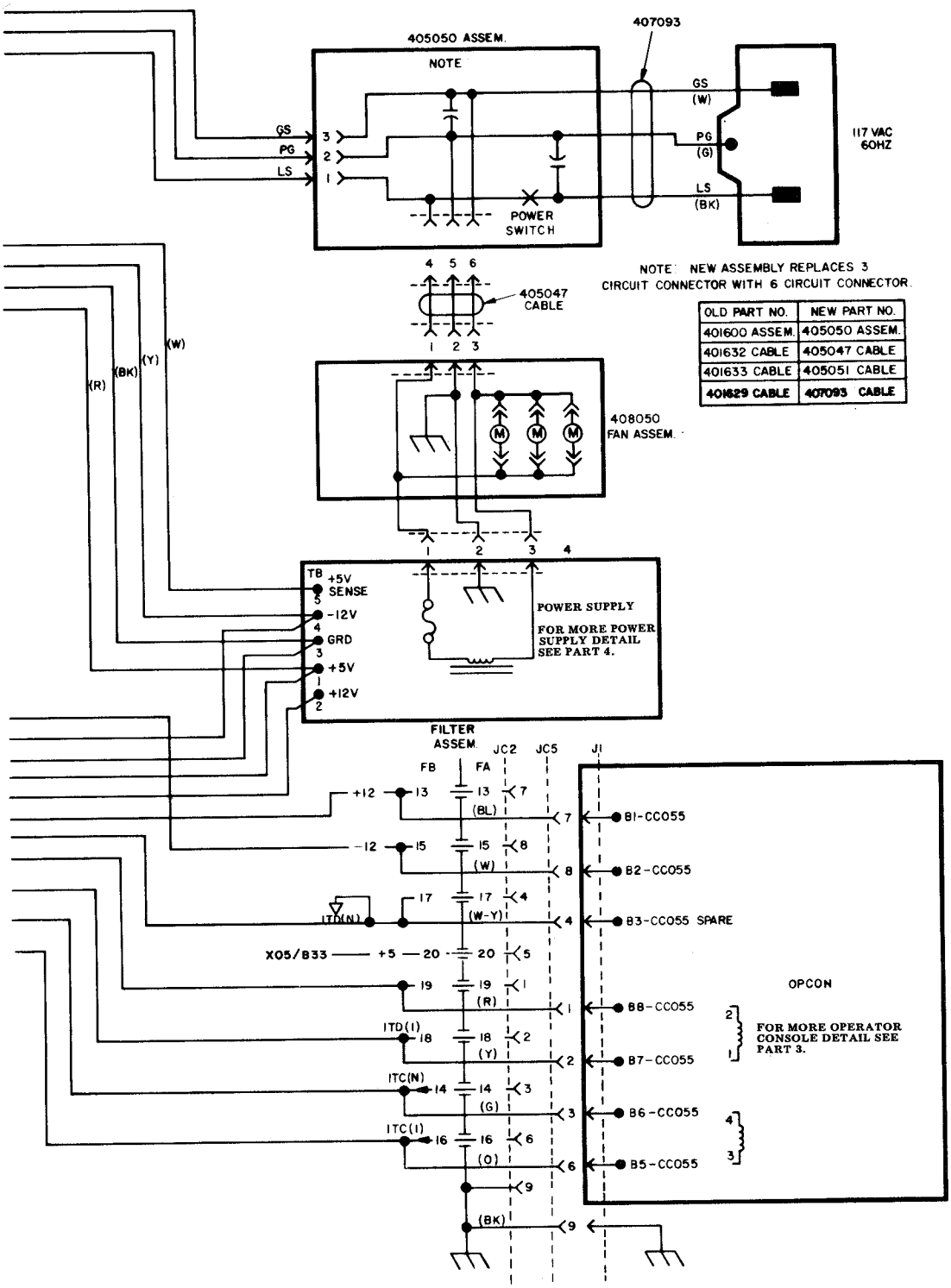

NOTE: NEW ASSEMBLY REPLACES 3 CIRCUIT CONNECTOR WITH 6 CIRCUIT CONNECTOR.

OLD PART NO.	NEW PART NO.
401600 ASSEM.	405050 ASSEM.
401632 CABLE	405047 CABLE
401633 CABLE	405051 CABLE
401629 CABLE	407093 CABLE

E. WIRING DIAGRAMS (Cont)

KDP Set for Switched Newtwork Application or Equipped With 9140 Station Controller (Printer Under Monitor)

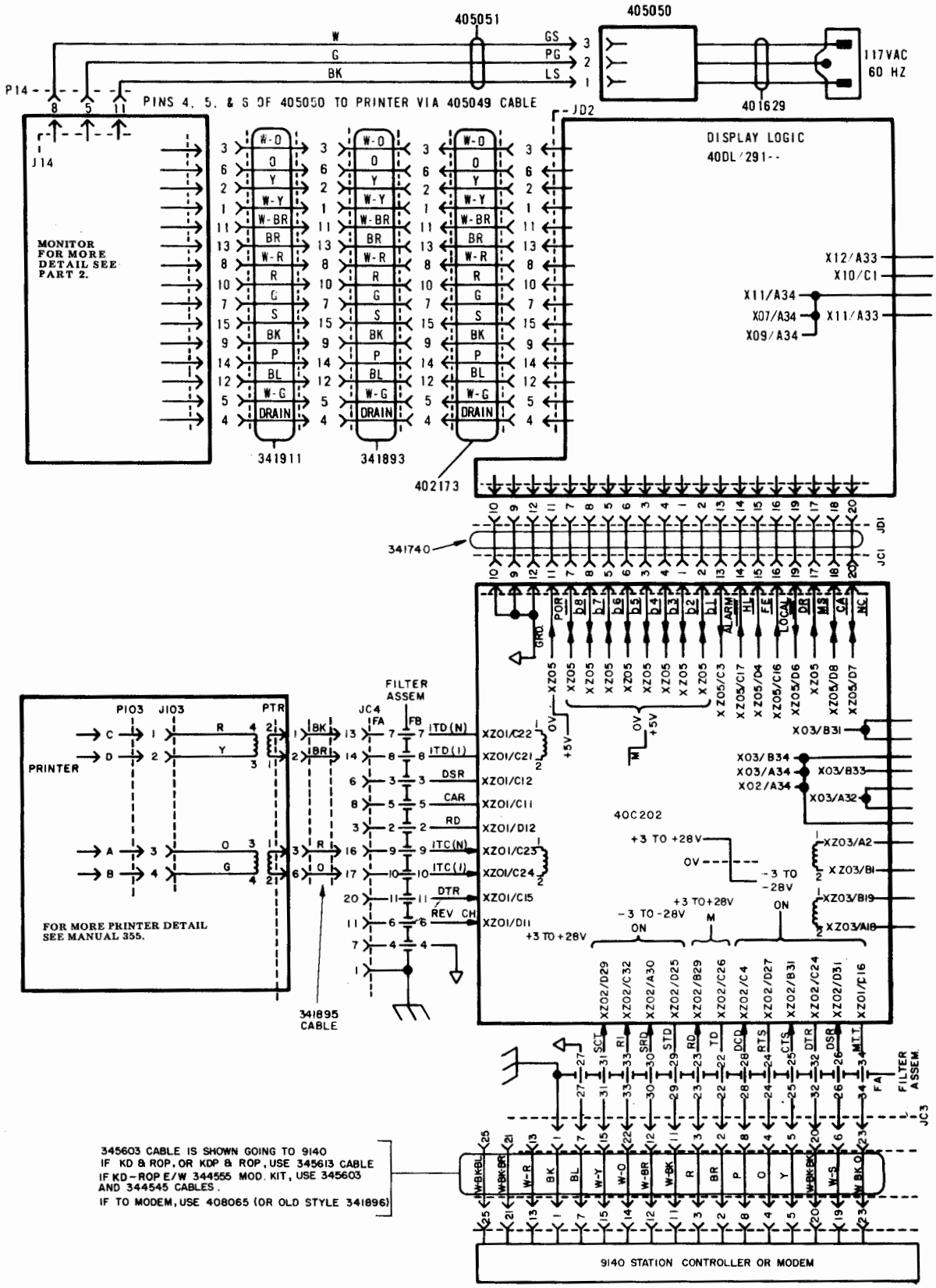

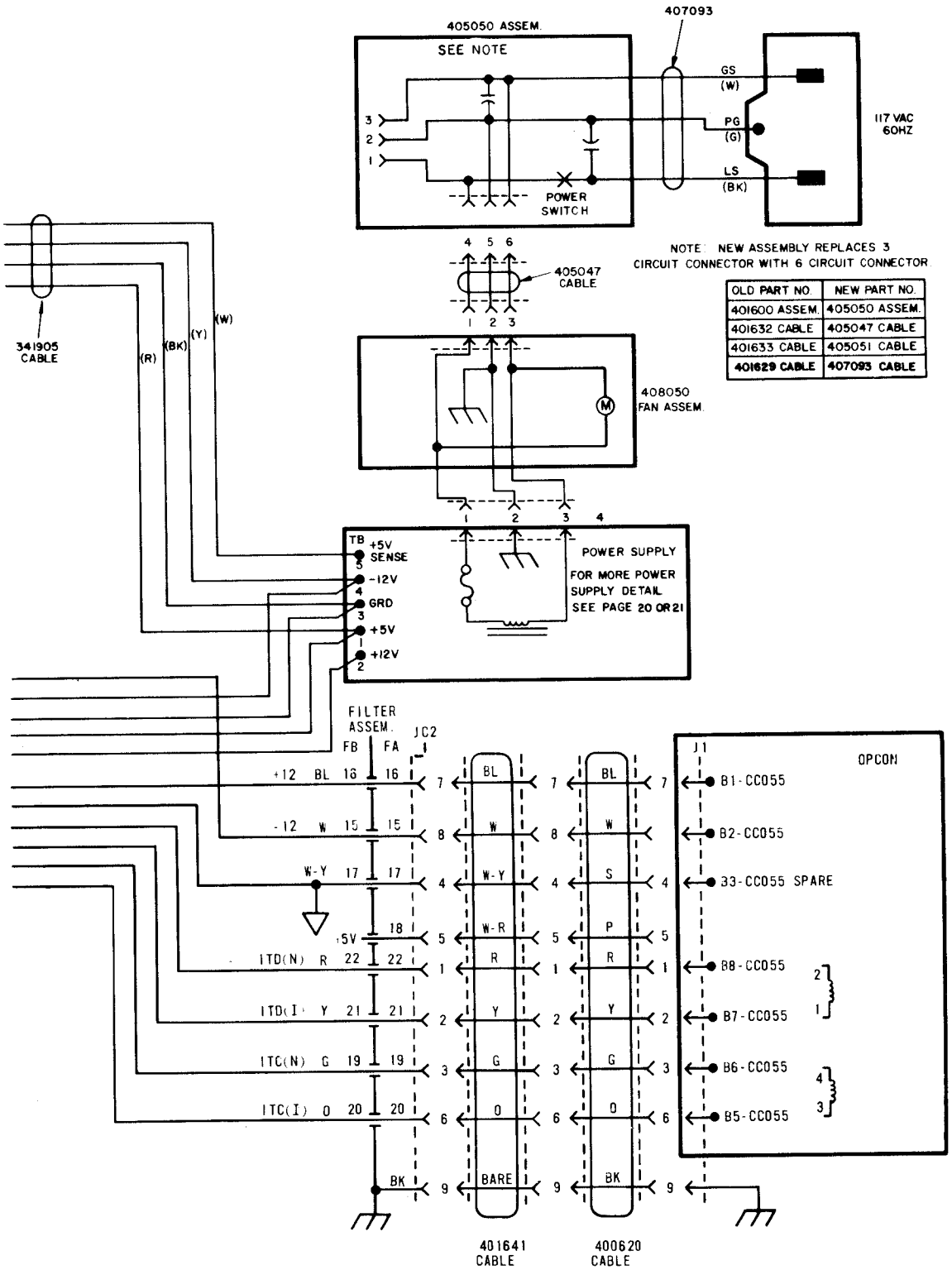

NOTE: NEW ASSEMBLY REPLACES 3 CIRCUIT CONNECTOR WITH 6 CIRCUIT CONNECTOR.

OLD PART NO.	NEW PART NO.
401600 ASSEM.	405050 ASSEM.
401632 CABLE	405047 CABLE
401633 CABLE	405051 CABLE
401629 CABLE	407093 CABLE

E. WIRING DIAGRAMS (Cont)

KDP Set -- Teletypewriter Compatible

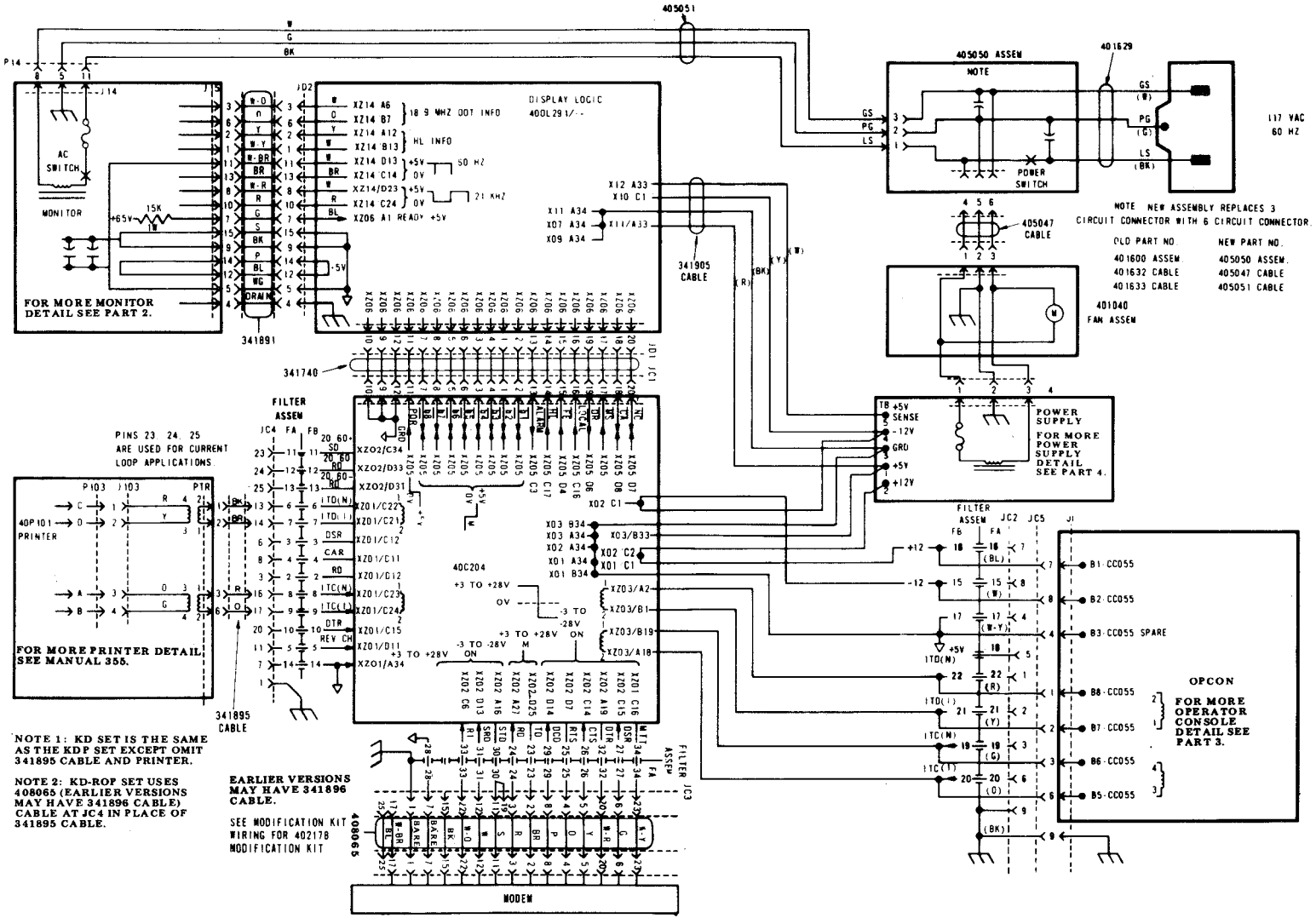

NOTE 1: KD SET IS THE SAME AS THE KDP SET EXCEPT OMIT 341895 CABLE AND PRINTER.

NOTE 2: KD-ROF SET USES 408065 (EARLIER VERSIONS MAY HAVE 341896 CABLE) CABLE AT JC4 IN PLACE OF 341895 CABLE.

Maxi- and Mini-Cluster Arrangements

410200 Back Panel (Early Design) -- Physical Layout

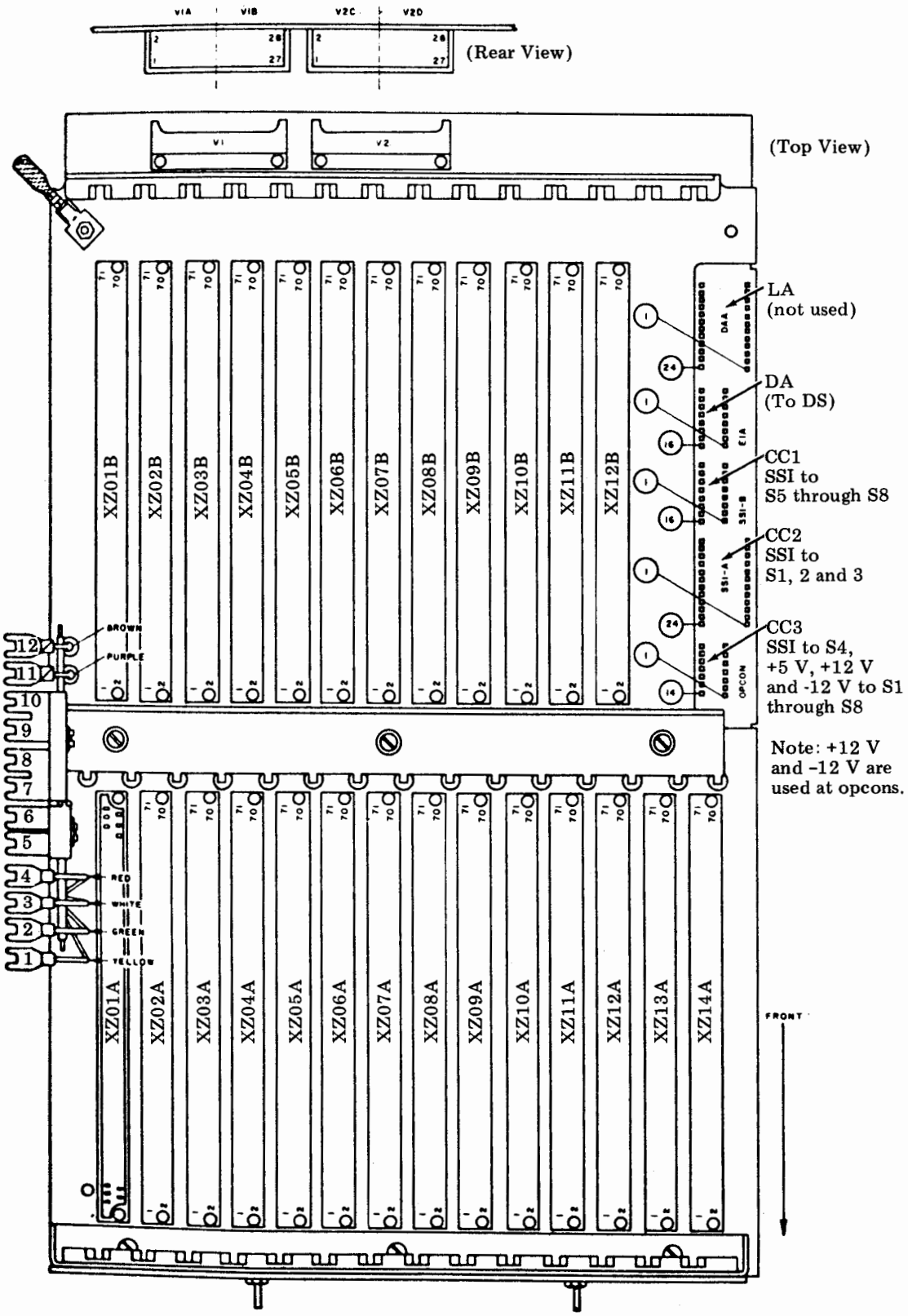

E. WIRING DIAGRAMS (Cont)

Maxi- and Mini-Cluster Arrangements (Cont)

410201 Back Panel (Late Design) -- Physical Layout

NOTE: The V1 and V2 pin numbers are the same as 410200 back panel (early design).

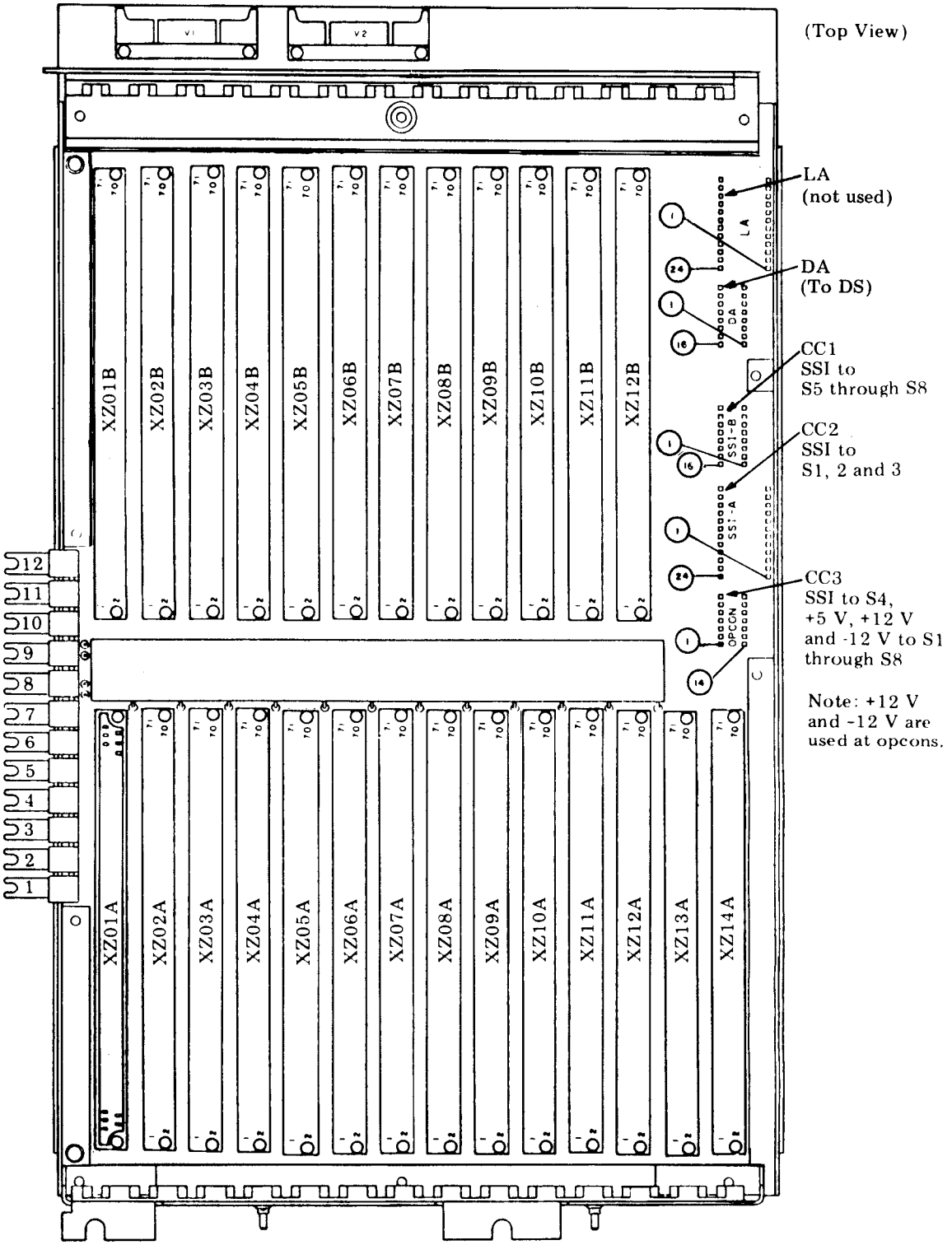

405150 Interconnection Module -- Physical Layout

NOTE: A 405150 interconnection module for an SCC is illustrated. Interconnection modules not illustrated are 405151 for a DCC and 405152 for a MCC.

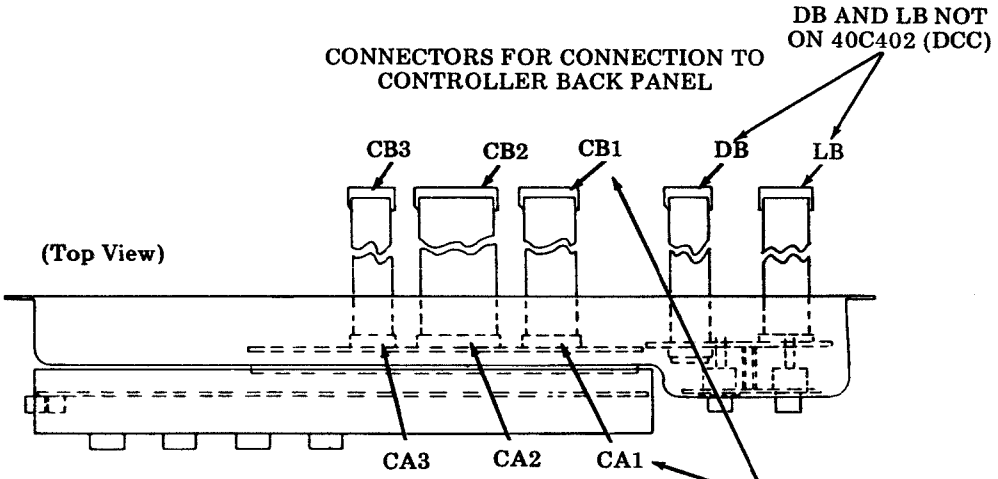

405181 FUSE

F1 — +5 V S1 to S4
F2 — +12 V S1 to S4
F3 — -12 V S1 to S4
F4 — +5 V FOR ALL MONITORS
F5 — -12 V S5 to S8
F6 — +12 V S5 to S8
F7 — +5 V S5 to S8

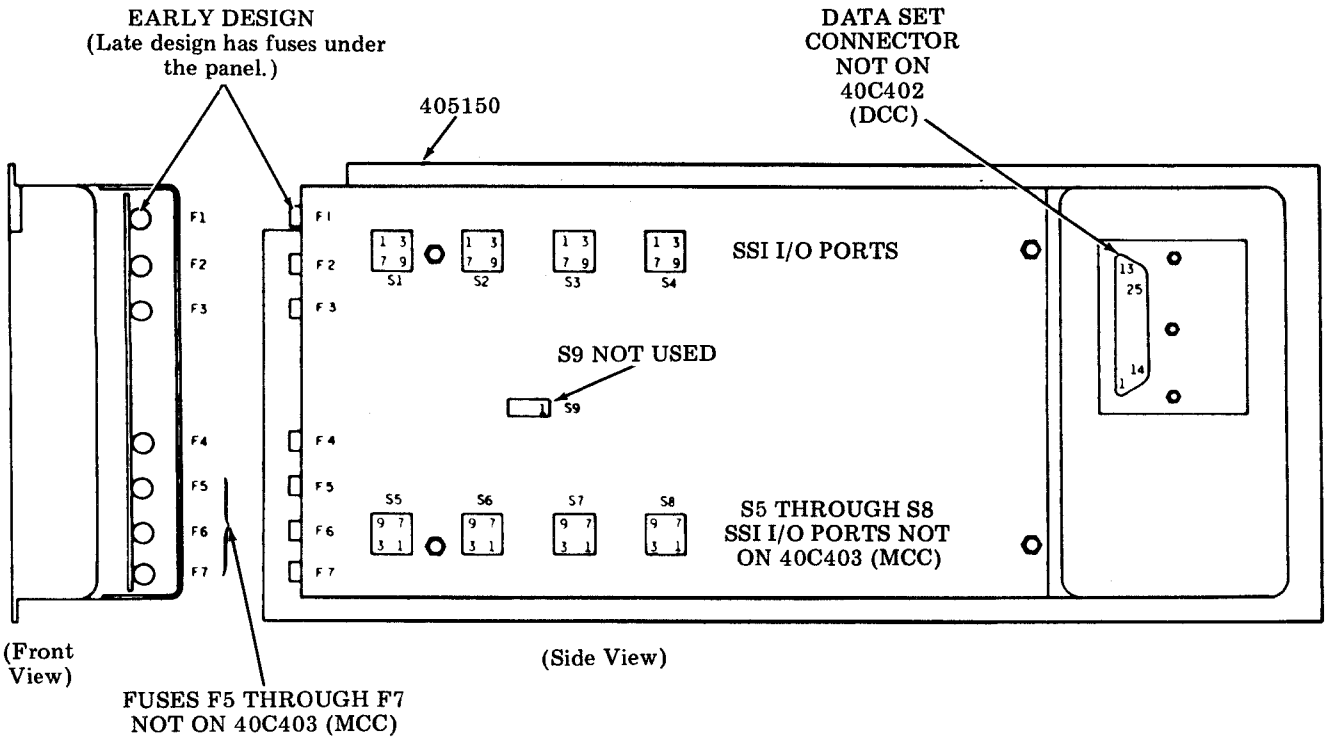

E. WIRING DIAGRAMS (Cont)

Maxi- and Mini-Cluster Arrangements (Cont)

Back Panel and Interconnection Module Wiring (Continued on Pages 249 through 252)

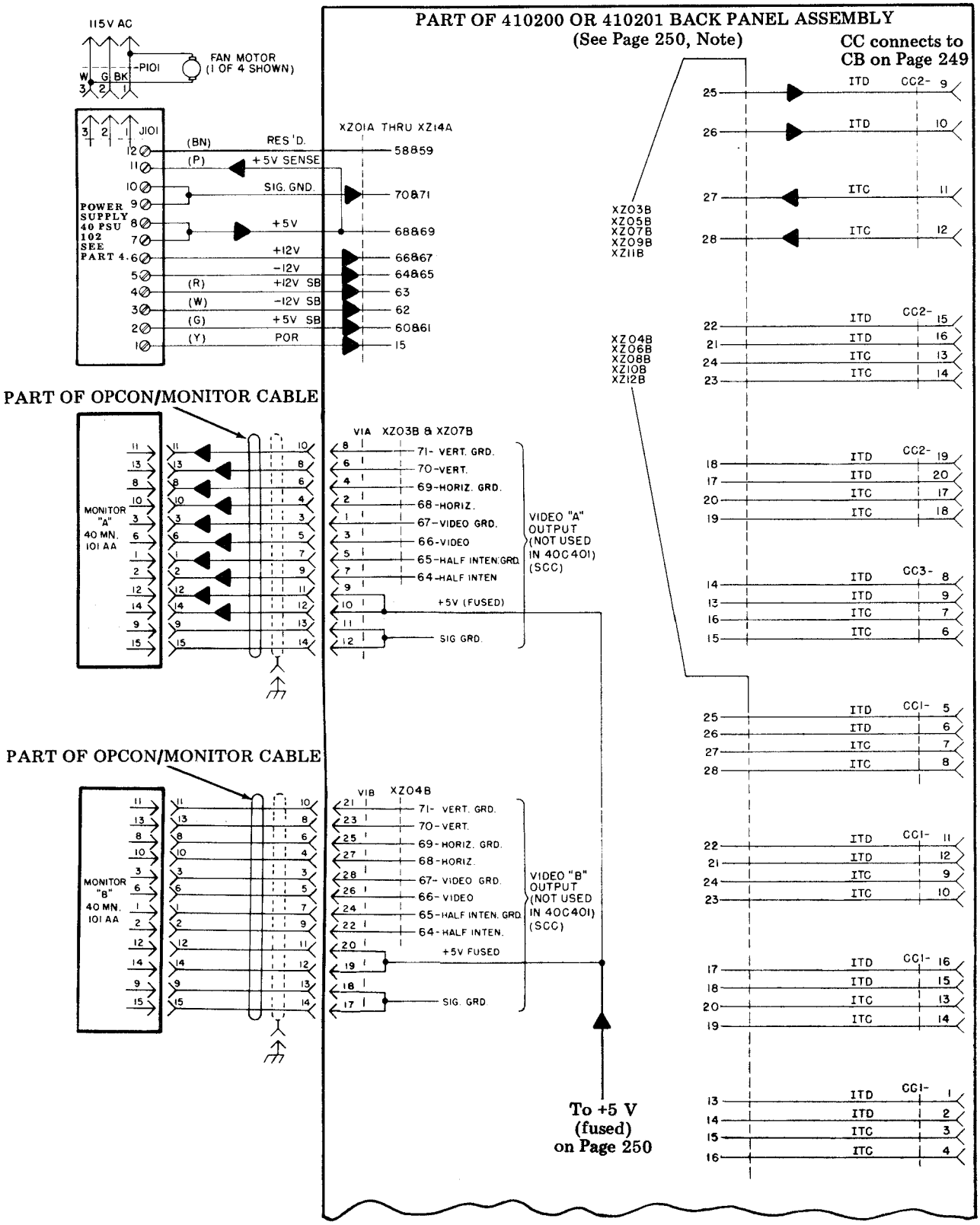

(Back panel continued on Page 250)

CB connects to CC on Page 248

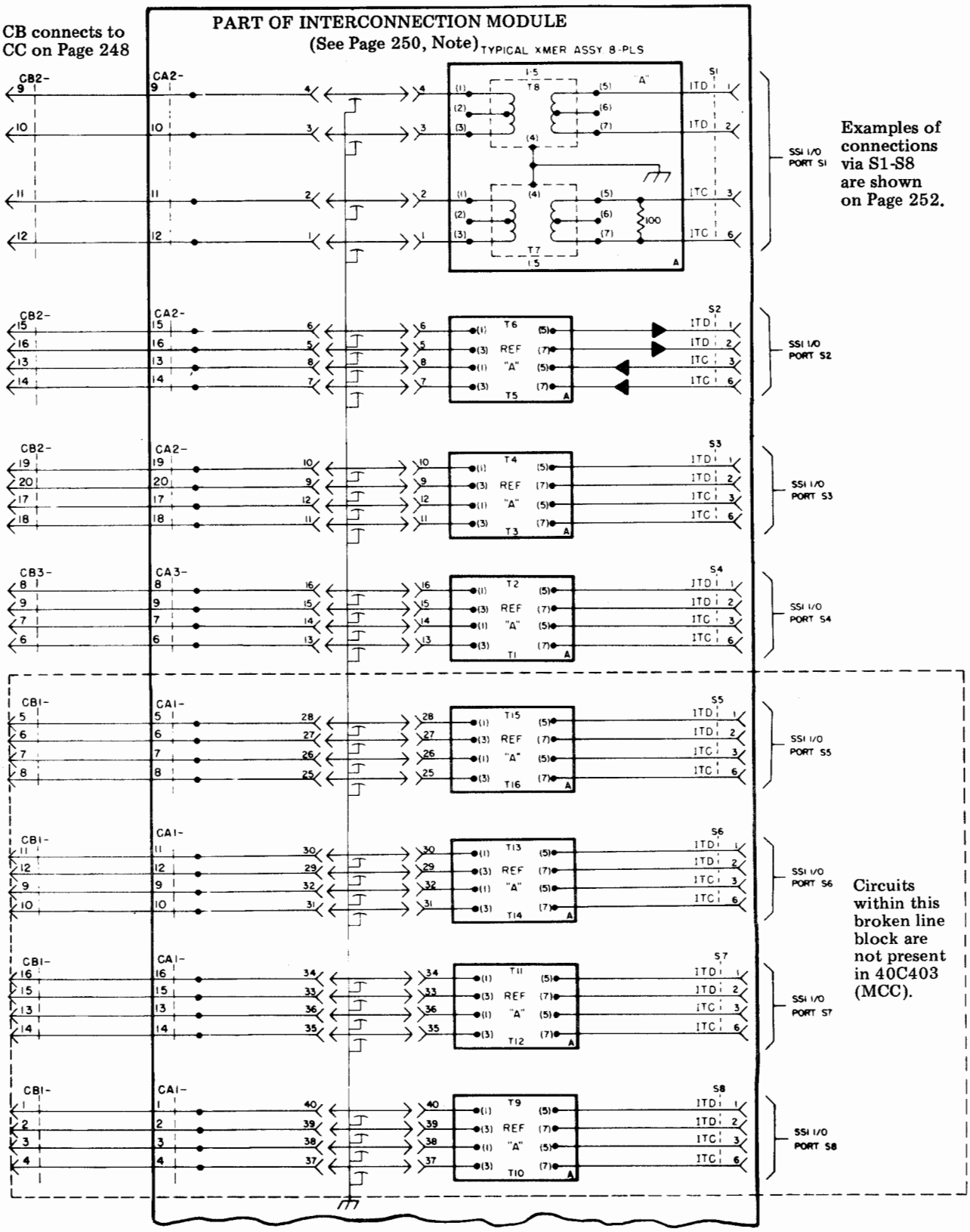

Examples of connections via S1-S8 are shown on Page 252.

Circuits within this broken line block are not present in 40C403 (MCC).

(Interconnection module continued on Page 251.)

E. WIRING DIAGRAMS (Cont)

Maxi- and Mini Cluster Arrangements (Cont)

(Back panel continued from Page 248.)

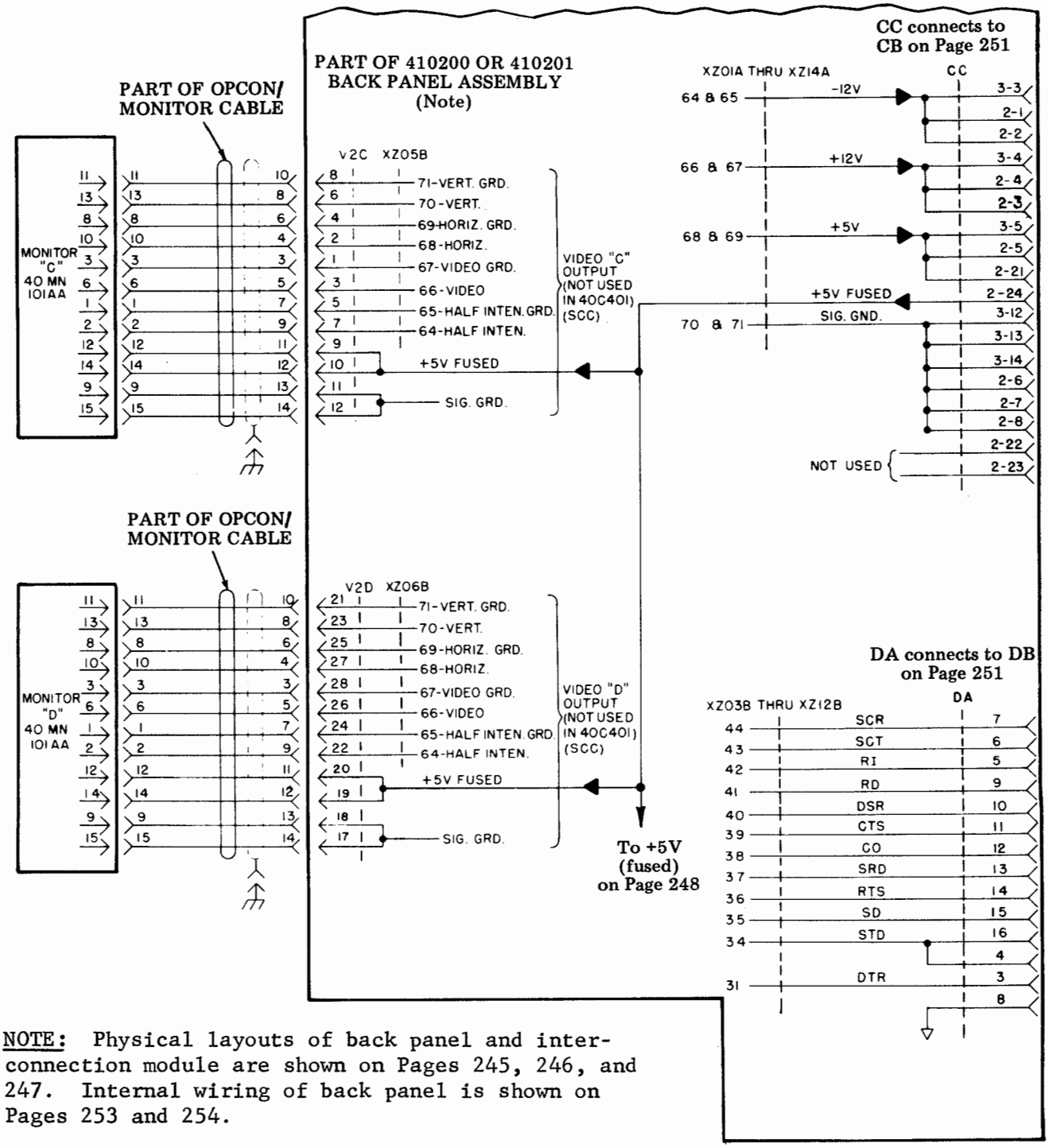

NOTE: Physical layouts of back panel and interconnection module are shown on Pages 245, 246, and 247. Internal wiring of back panel is shown on Pages 253 and 254.

(Interconnection module continued from Page 249.)

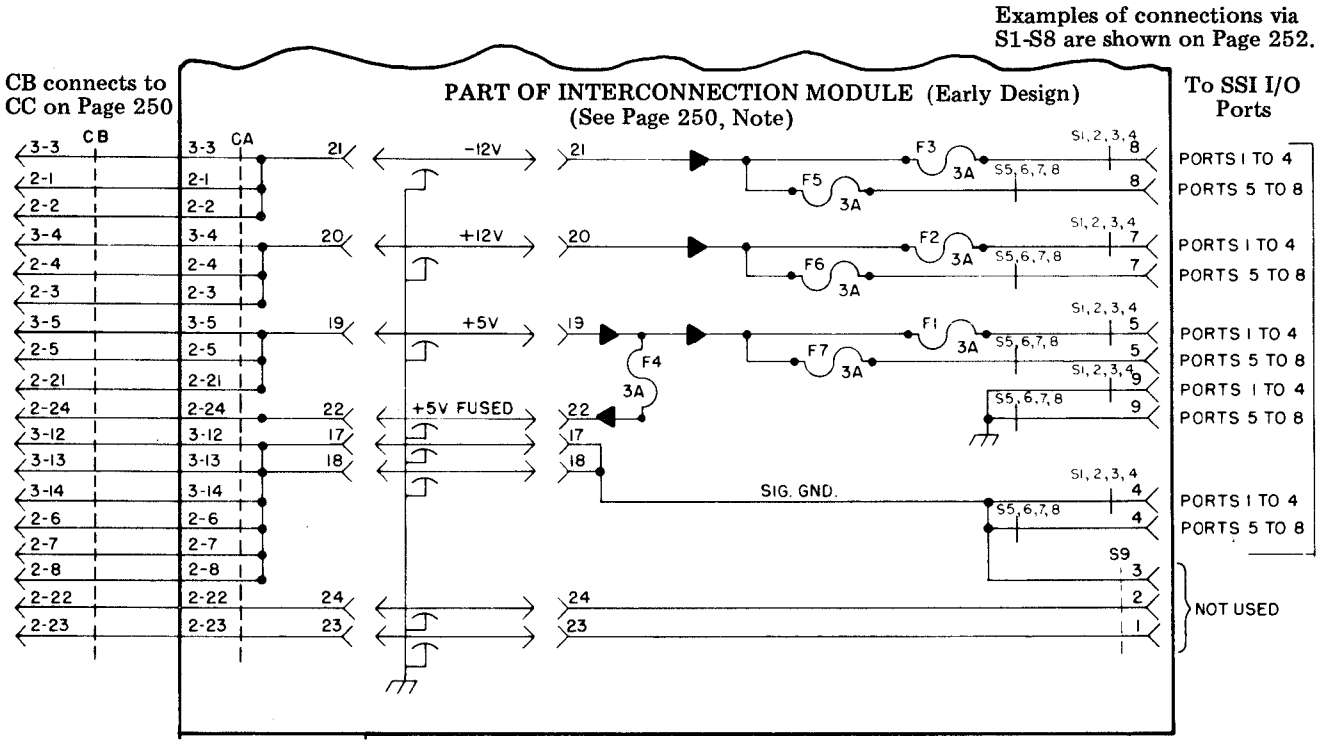

E. WIRING DIAGRAMS (Cont)

Maxi- and Mini-Cluster Arrangements (Cont)

Back Panel and Interconnection Module Wiring (Cont)

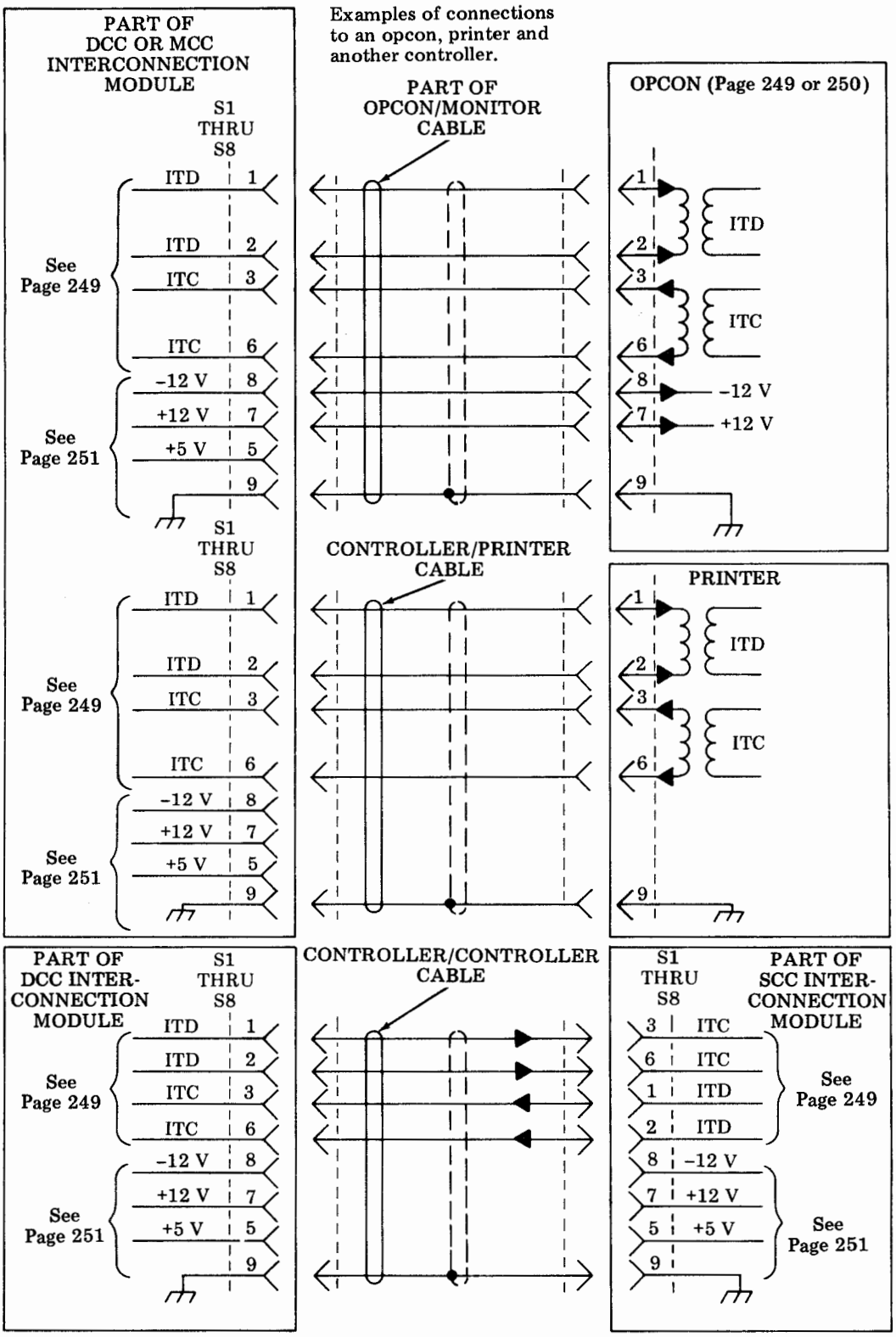

Back Panel Internal Wiring (Continued on Pages 254 through 260)

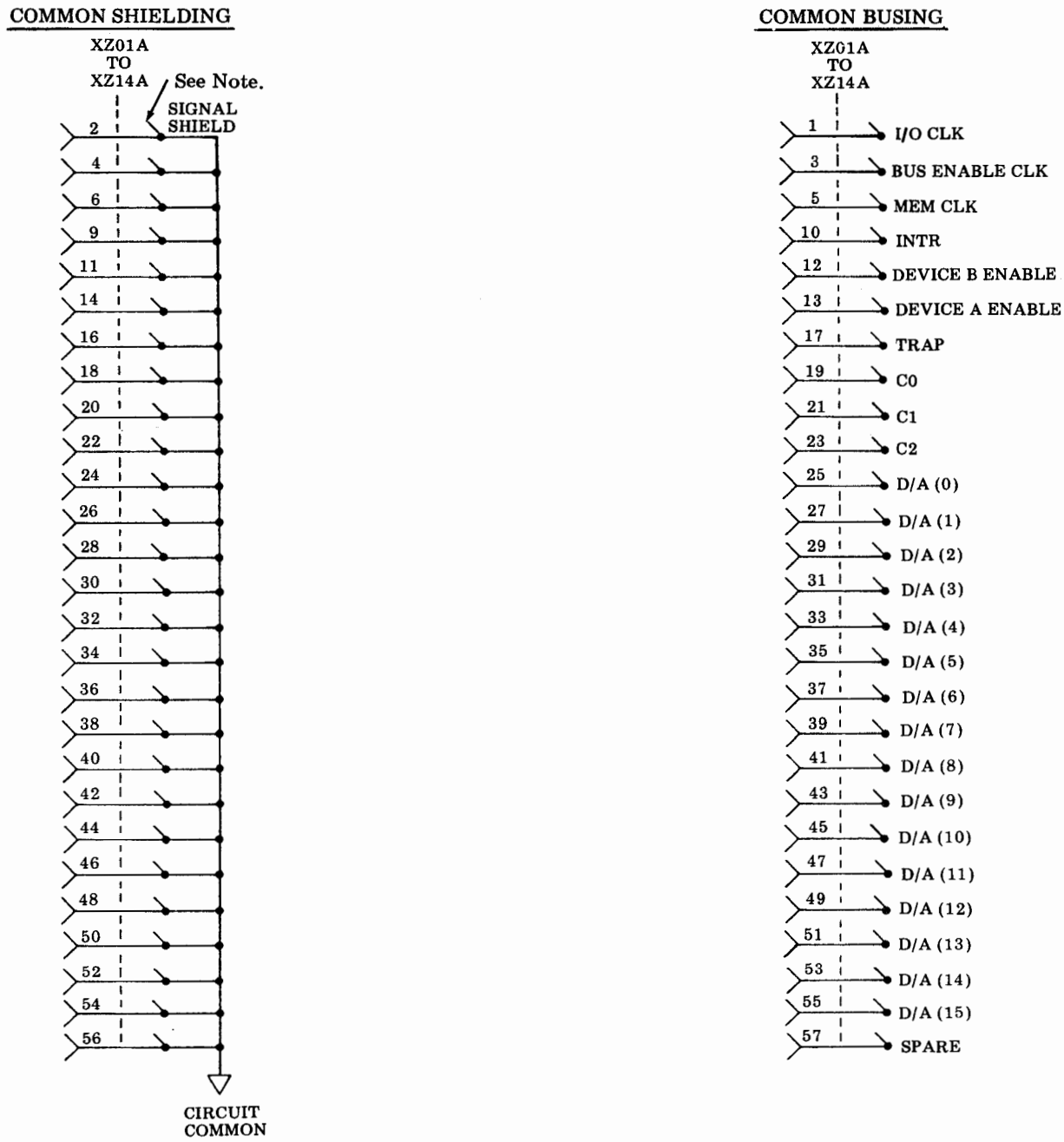

NOTE:

Indicates multiple connection, ie, terminal "2" is common to all connectors "01A" to "14A".

E. WIRING DIAGRAMS (Cont)

Maxi- and Mini-Cluster Arrangements (Cont)

Back Panel Internal Wiring (Cont)

INTERRUPT GRANT WIRING

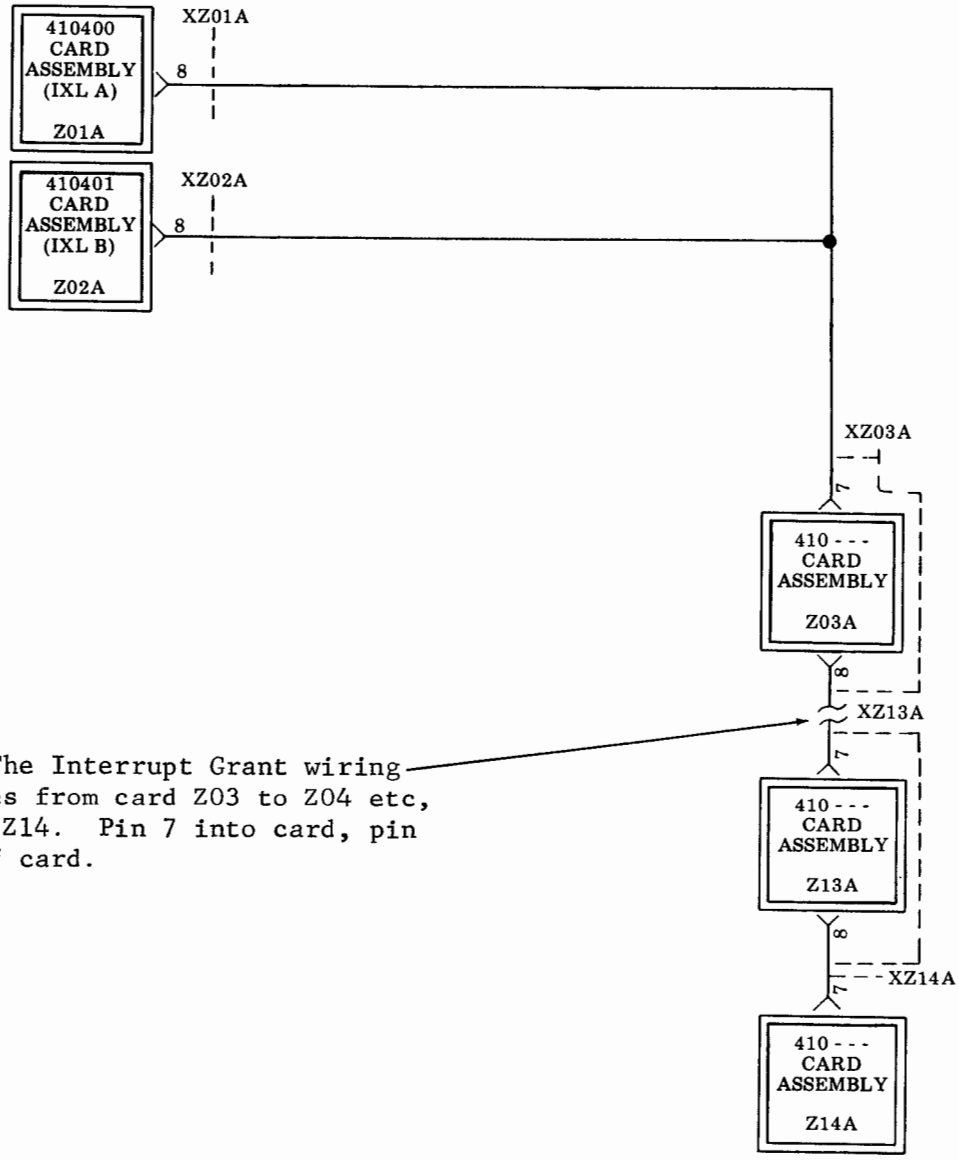

NOTE: The Interrupt Grant wiring continues from card Z03 to Z04 etc, through Z14. Pin 7 into card, pin 8 out of card.

POWER AND MISCELLANEOUS WIRING

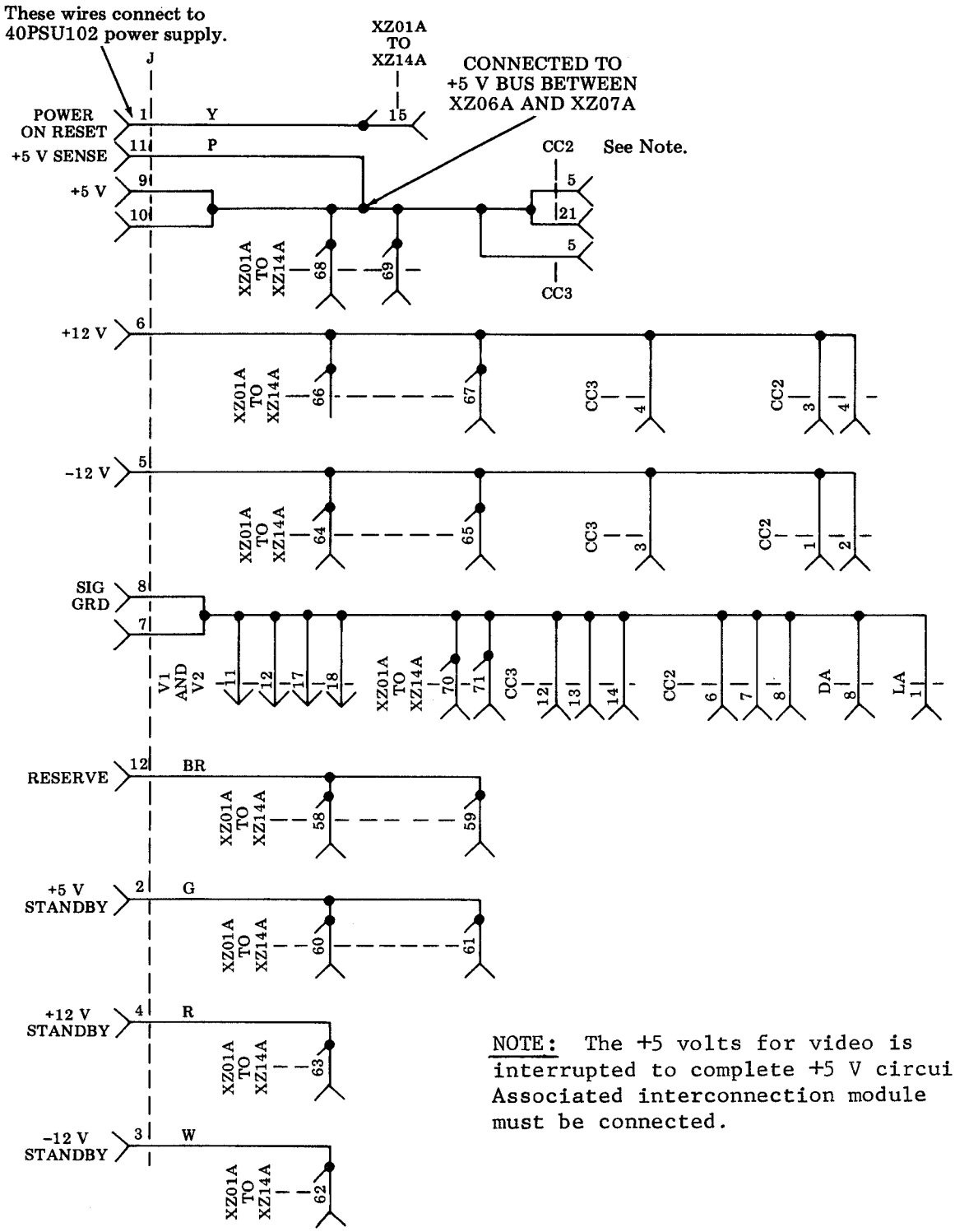

NOTE: The +5 volts for video is interrupted to complete +5 V circuit. Associated interconnection module must be connected.

E. WIRING DIAGRAMS (Cont)

Maxi- and Mini-Cluster Arrangements (Cont)

Back Panel Internal Wiring (Cont)

SSI

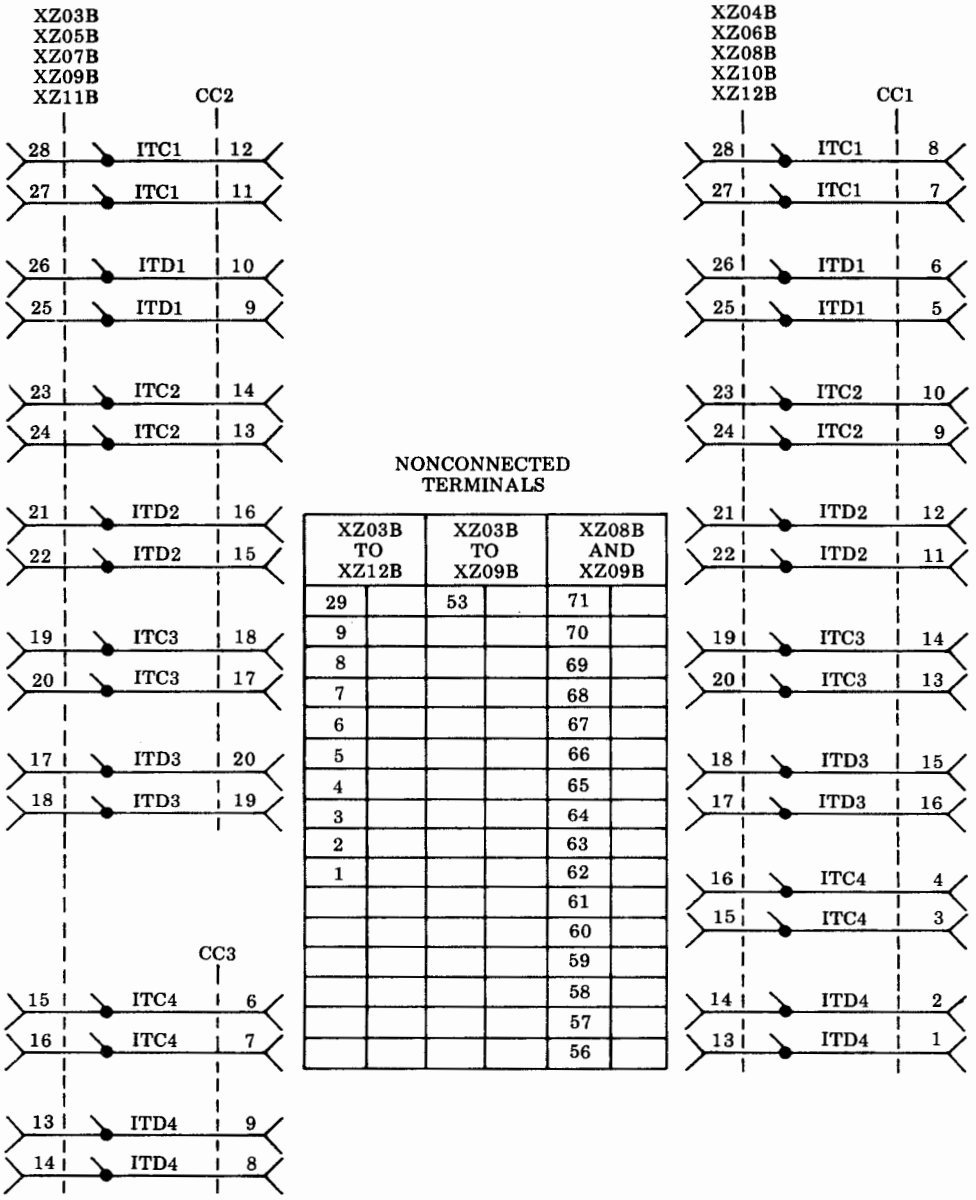

NONCONNECTED TERMINALS

XZ03B TO XZ12B		XZ03B TO XZ09B		XZ08B AND XZ09B	
29		53		71	
9				70	
8				69	
7				68	
6				67	
5				66	
4				65	
3				64	
2				63	
1				62	
				61	
				60	
				59	
				58	
				57	
				56	

VIDEO A

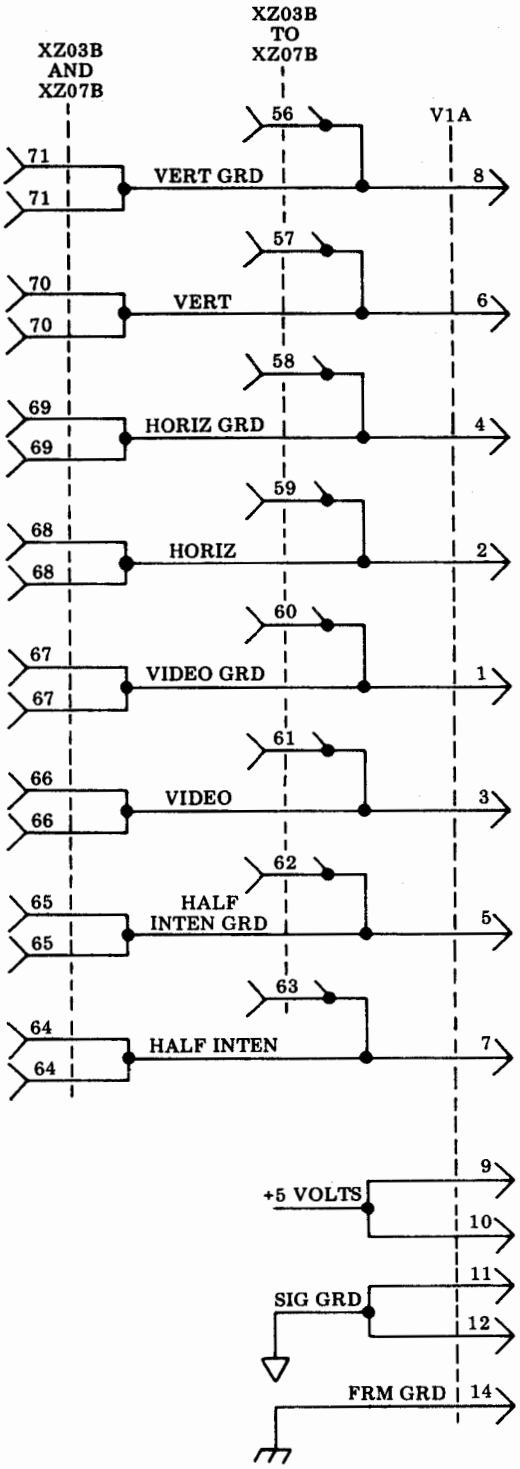
XZ03B AND XZ07B
XZ03B TO XZ07B
V1A
71
71
56
VERT GRD
8
70
70
57
VERT
6
69
69
58
HORIZ GRD
4
68
68
59
HORIZ
2
67
67
60
VIDEO GRD
1
66
66
61
VIDEO
3
65
65
62
HALF INTEN GRD
5
64
64
63
HALF INTEN
7
9
+5 VOLTS
10
11
SIG GRD
12
FRM GRD
14

E. WIRING DIAGRAMS (Cont)

Maxi- and Mini-Cluster Arrangements (Cont)

Back Panel Internal Wiring (Cont)

VIDEO B

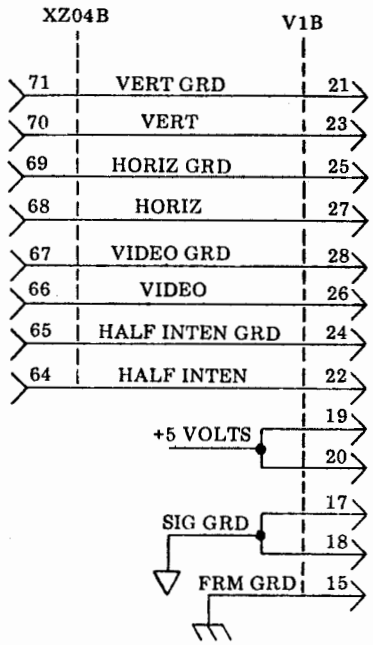

VIDEO C

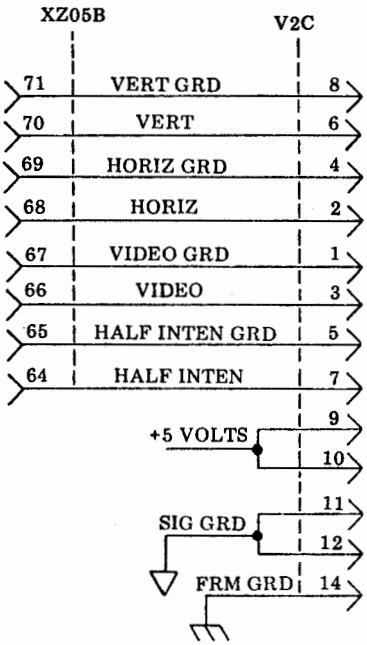

VIDEO D

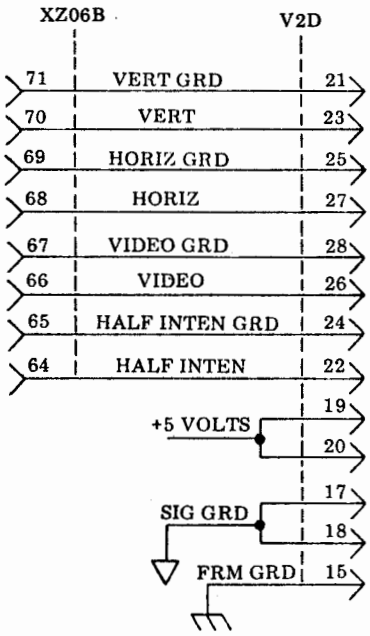

IXL

XZ01B		XZ02B
1	LOAD	1
2	OSC EN	2
3	MUX EN (L)	3
4	R2	4
5	R3	5
6	R1	6
7	R0	7
8	DA ϕ	8
9	BYTE	9
10	DA1	10
11	OUT ENABLE	11
12	DA2	12
13	DA3	13
14	DA4	14
15	DA5	15
16	DA6	16
17	DA7	17
18		18
19		19
20	DA8	20
21		21
22		22
23	WLB	23
24	DA9	24
25	DA10	25
26	DA11	26
27	DA12	27
28	DA13	28
29	DA14	29
30	DA15	30
31	STAT CTRL 3	31
32	STAT CTRL 2	32
33	STAT CTRL 1	33
34	STAT CTRL ϕ	34
35	CNT EN	35

XZ01B		XZ02B
36	CY CTRL 1	36
37	CY CTRL ϕ	37
38	ACC CLK	38
39	SEQ CTRL ϕ	39
40		40
41		41
42		42
43	M	43
44		44
45		45
46		46
47	Z	47
48	P	48
49	C	49
50		50
51		51
52	T	52
53		53
54	INTR	54
56		56
57	N	57
58	MPS ϕ	58
59	MPS 1	59
60	MPS 2	60
61	MPS 3	61
62		62
63	MUX SEL 4	63
64		64
65	MUX SEL 3	65
66		66
67	MUX SEL 2	67
69	MUX SEL 1	69
70	RUN IN	70
71	MUX SEL ϕ	71

See Note.

NOTE: Two other circuits exist but are not used. One is XZ01B-55 to XZ02B-55. The other is XZ01B-68 to XZ02B-68.

E. WIRING DIAGRAMS (Cont)

Maxi- and Mini-Cluster Arrangements (Cont)

Back Panel Internal Wiring (Cont)

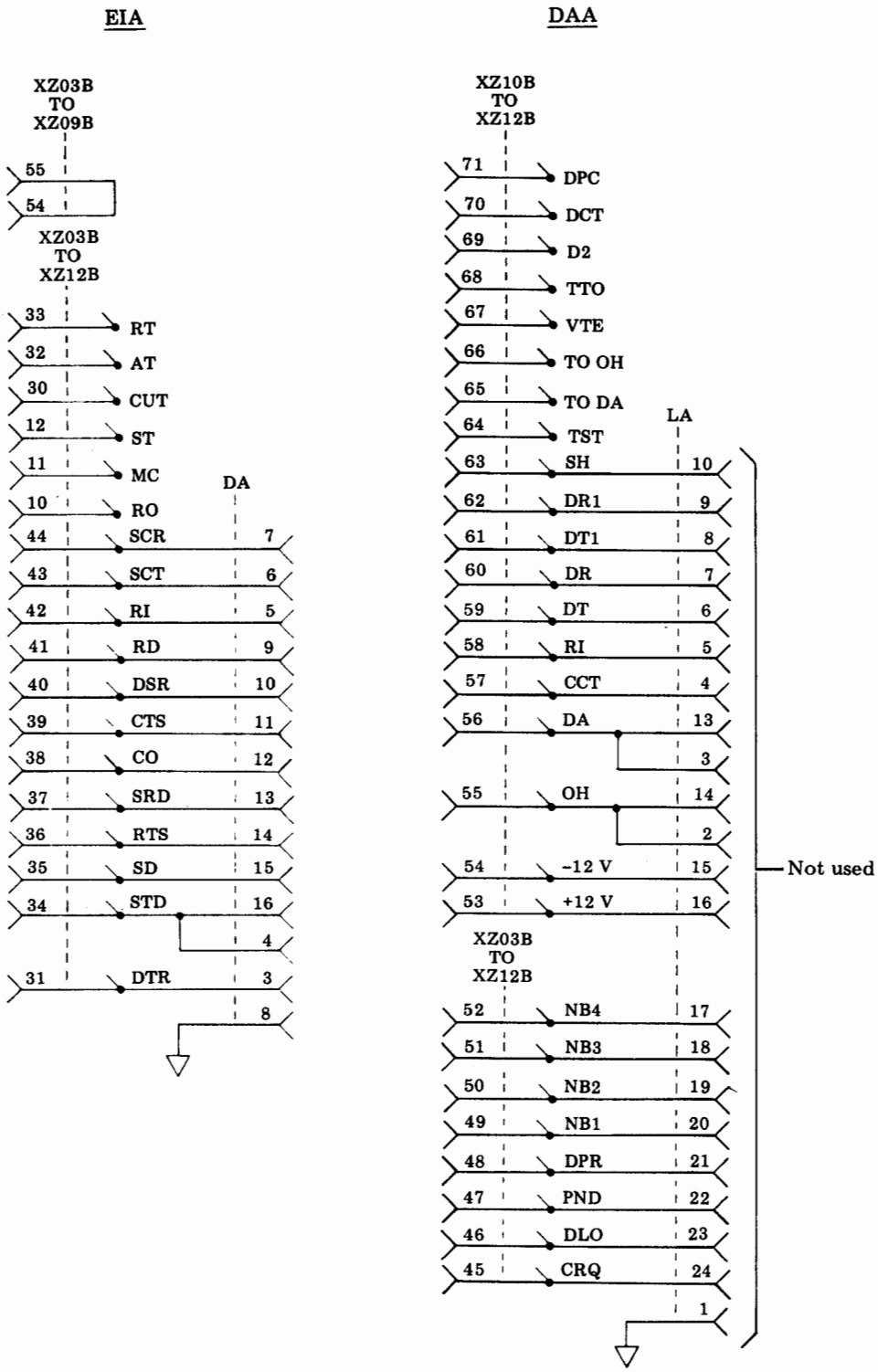

Single-Display Station Arrangements

410277 Back Panel Assembly Physical Layout

NOTE: Page 261 shows the 410277 back panel (late design). Page 262 shows the 410276 back panel (early design).

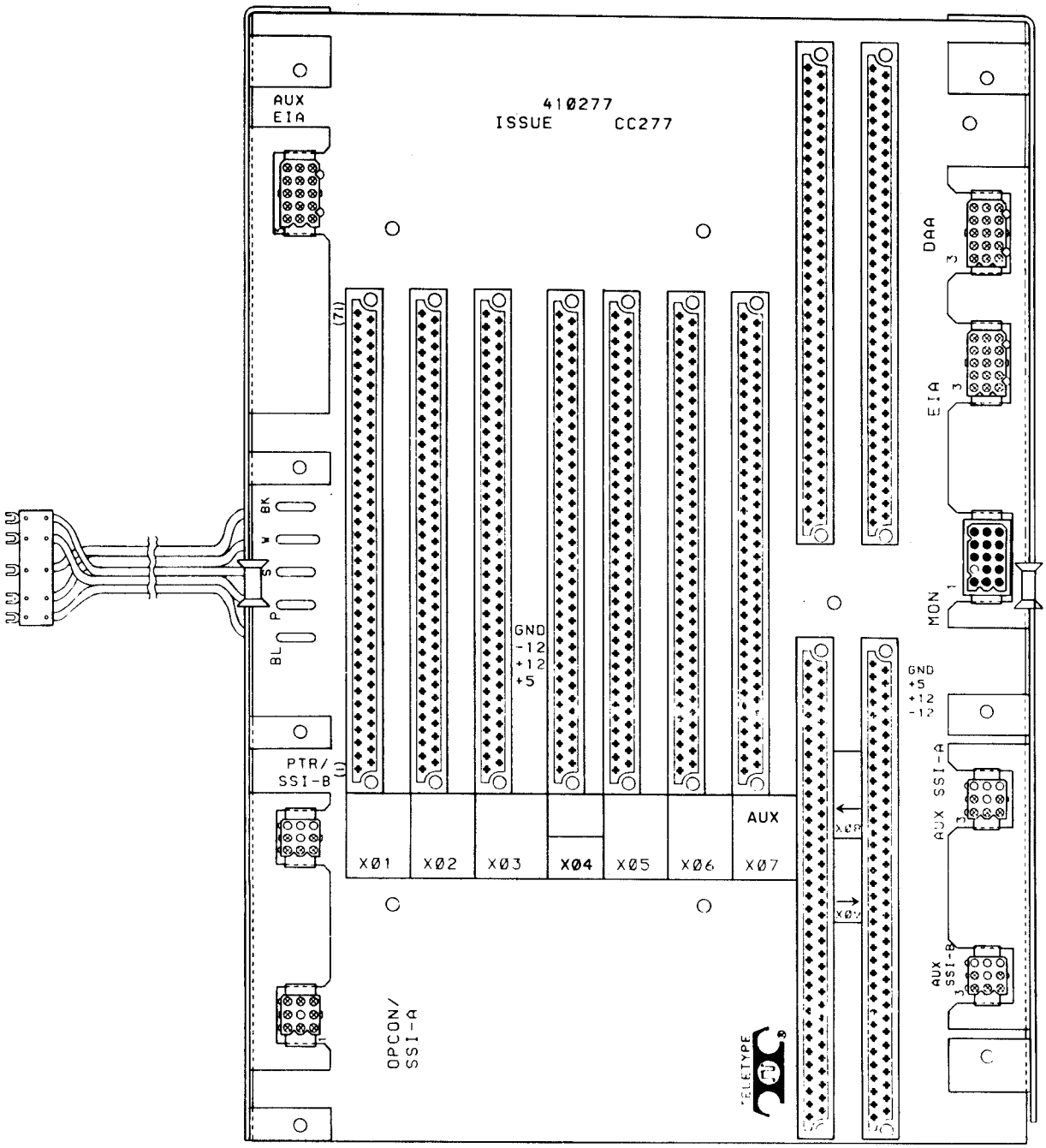

E. WIRING DIAGRAMS (Cont)

Single-Display Station Arrangements (Cont)

410276 Back Panel Assembly Physical Layout

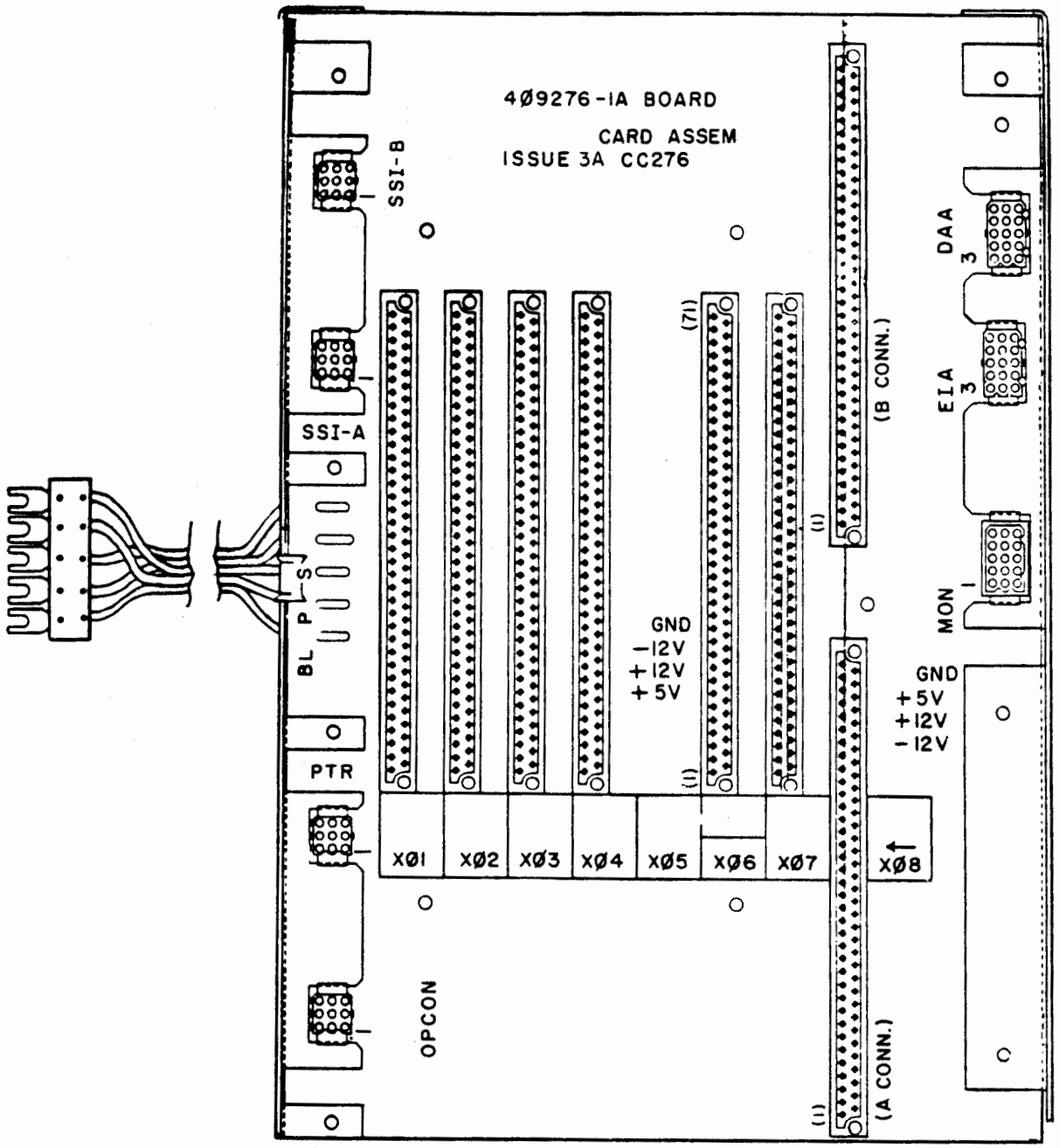

Back Panel Assembly Wiring

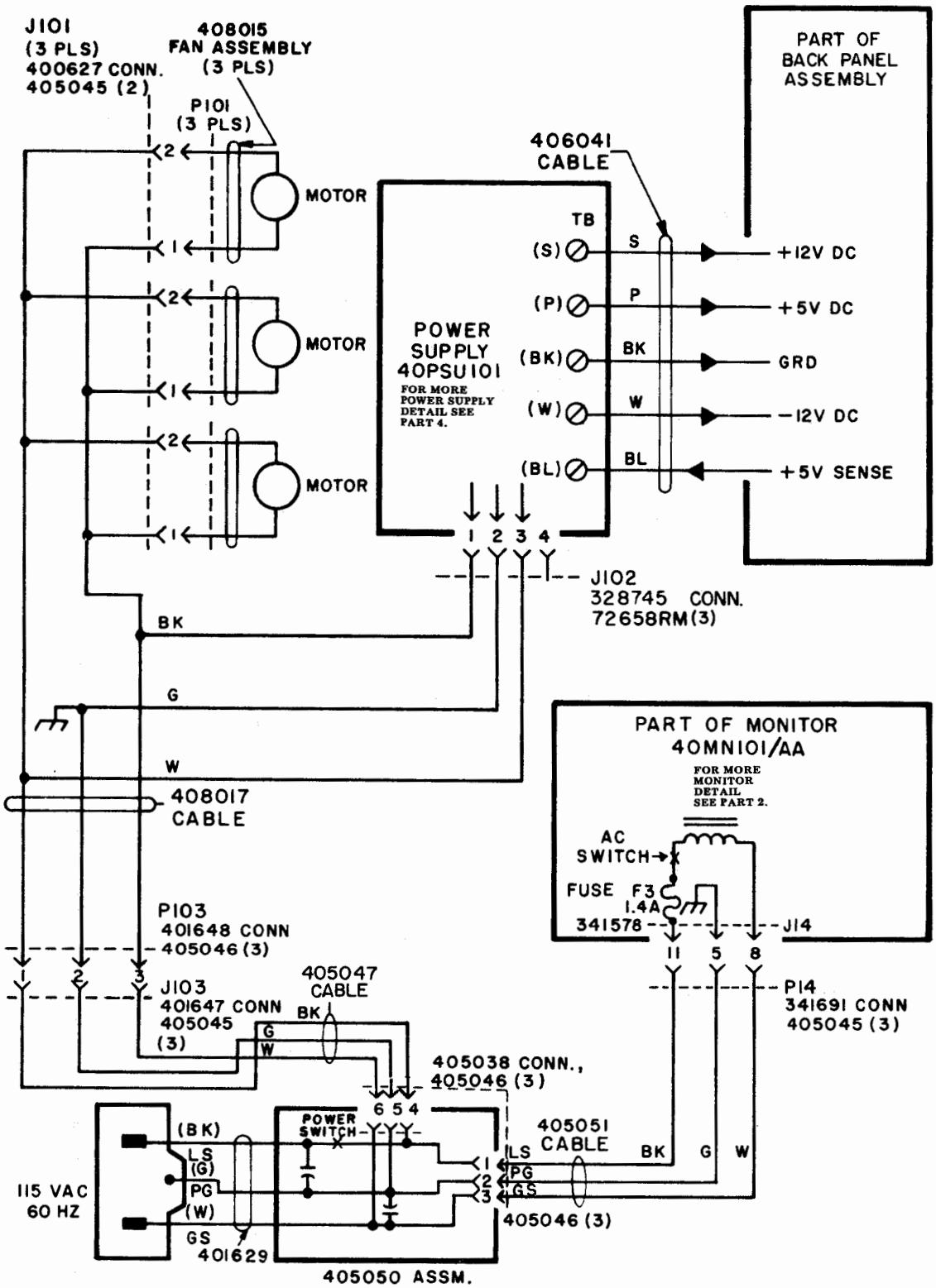

E. WIRING DIAGRAMS (Cont)

Single-Display Station Arrangements (Cont)

Back Panel Assembly Wiring (Cont)

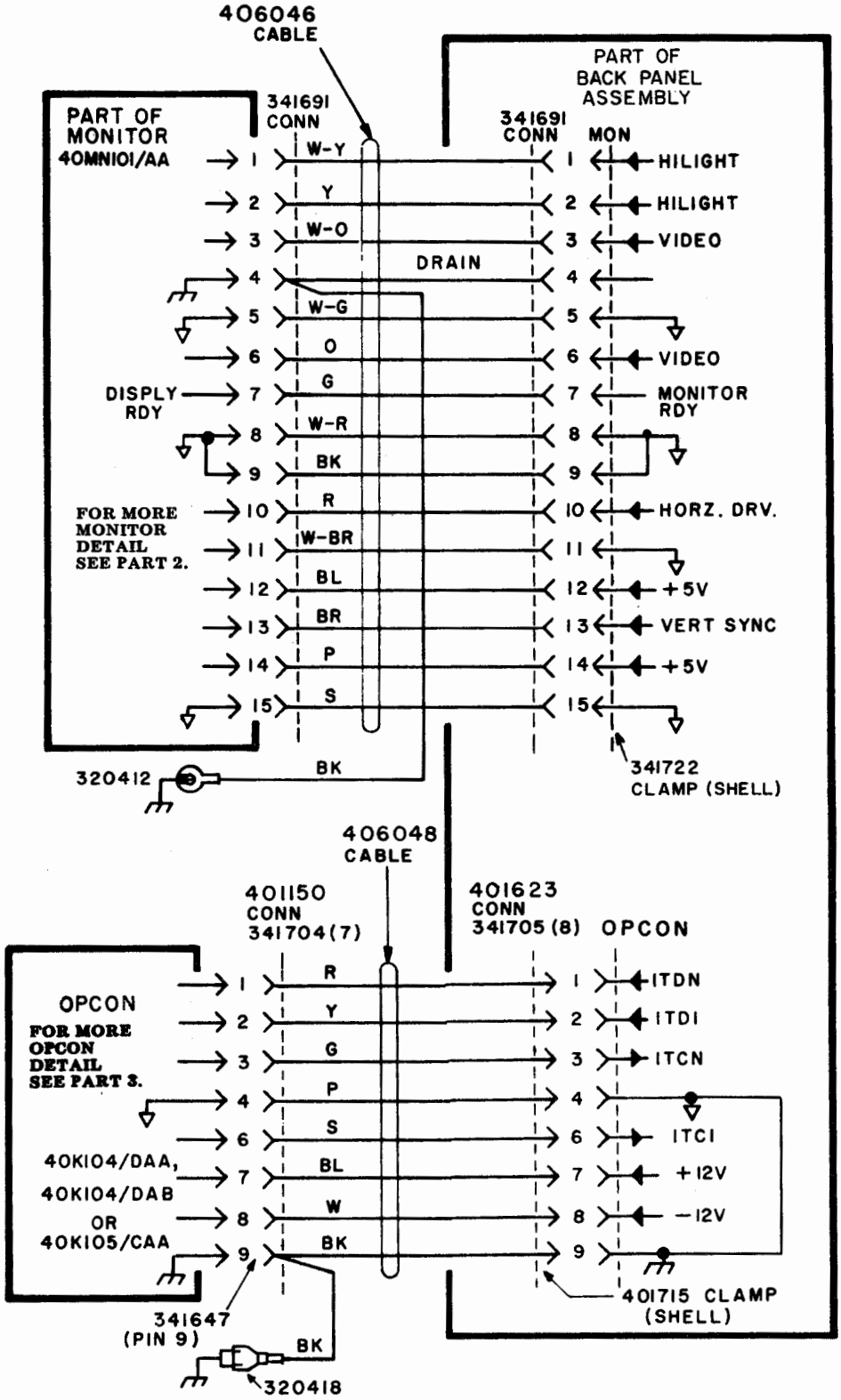

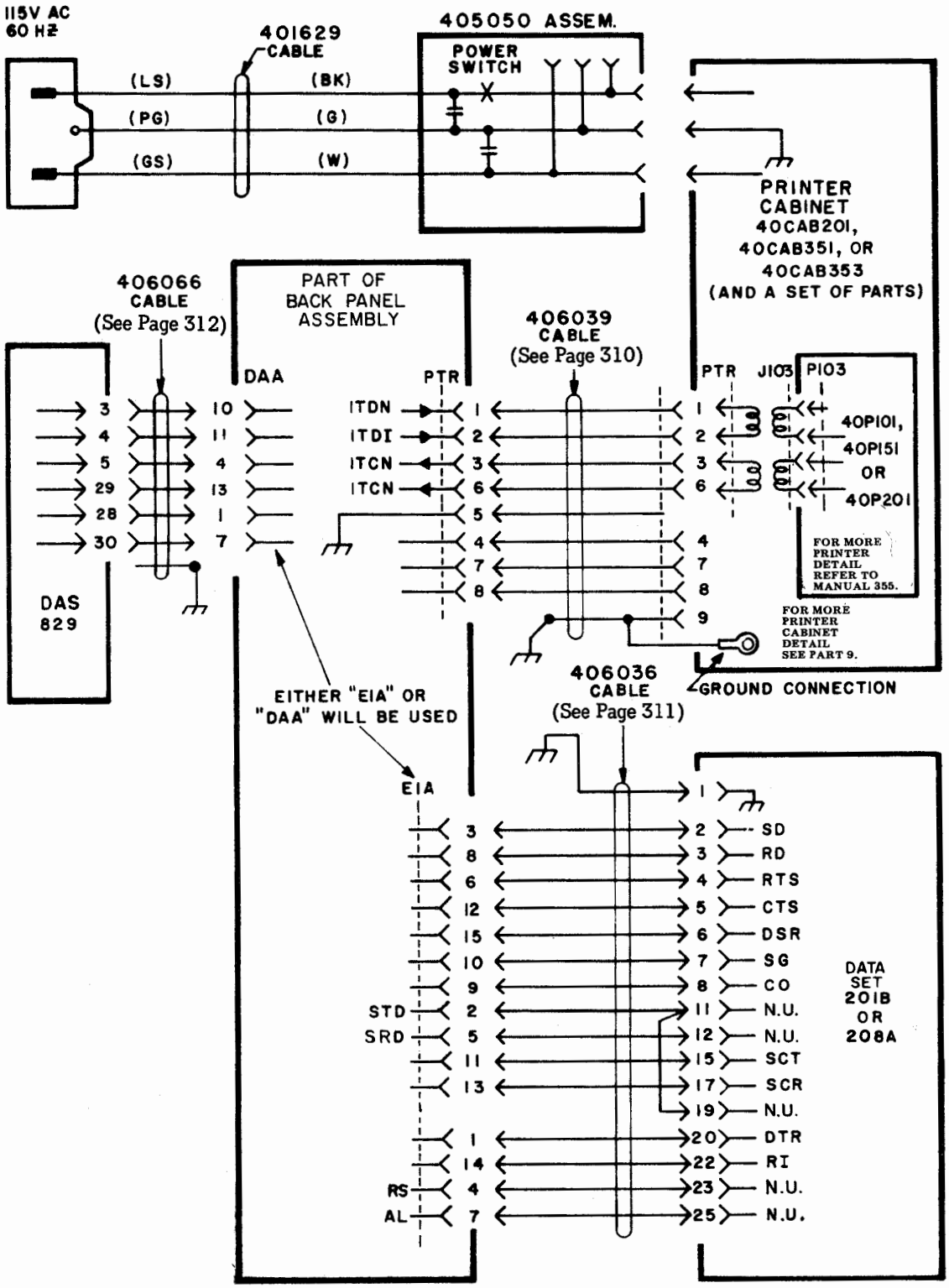
115V AC
60 HZ
401629
CABLE
405050 ASSEM.
POWER
SWITCH
(LS)
(PG)
(GS)
(BK)
(G)
(W)
PRINTER
CABINET
40CAB201,
40CAB351, OR
40CAB353
(AND A SET OF PARTS)
406066
CABLE
(See Page 312)
PART OF
BACK PANEL
ASSEMBLY
406039
CABLE
(See Page 310)
DAA
PTR
PTR
J103
P103
ITDN
ITDI
ITCN
ITCN
40P101,
40P151
OR
40P201
FOR MORE
PRINTER
DETAIL
REFER TO
MANUAL 355.
FOR MORE
PRINTER
CABINET
DETAIL
SEE PART 9.
DAS
829
GROUND CONNECTION
406036
CABLE
(See Page 311)
EITHER "EIA" OR
"DAA" WILL BE USED
EIA
STD
SRD
RS
AL
SD
RD
RTS
CTS
DSR
SG
CO
N.U.
N.U.
SCT
SCR
N.U.
DTR
RI
N.U.
N.U.
DATA
SET
201B
OR
208A

E. WIRING DIAGRAMS (Cont)

Single-Display Station Arrangements (Cont)

410277 Internal Wiring

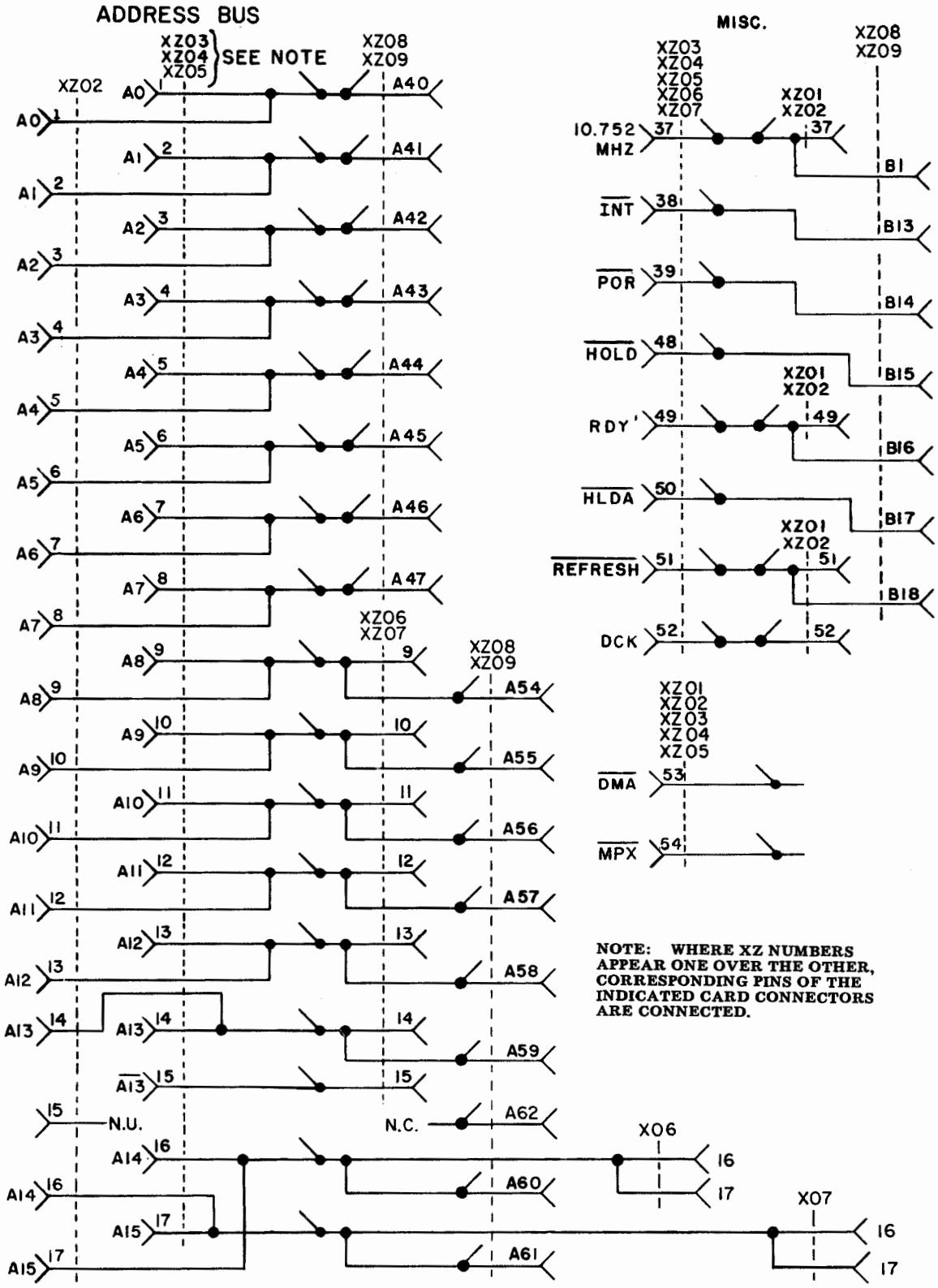

NOTE: WHERE XZ NUMBERS APPEAR ONE OVER THE OTHER, CORRESPONDING PINS OF THE INDICATED CARD CONNECTORS ARE CONNECTED.

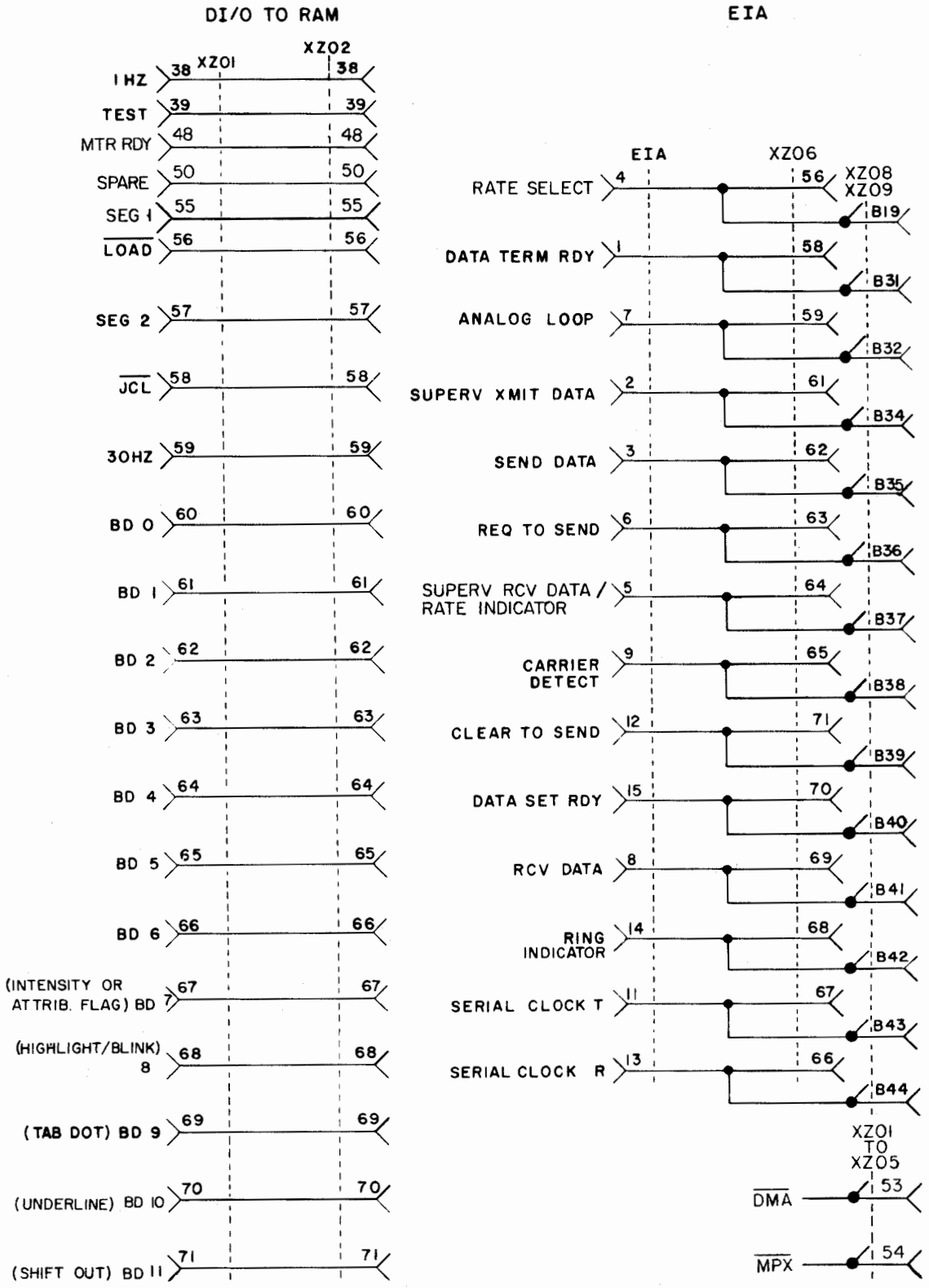
DI/O TO RAM
XZ01
XZ02
1 HZ
TEST
MTR RDY
SPARE
SEG 1
LOAD
SEG 2
JCL
30HZ
BD 0
BD 1
BD 2
BD 3
BD 4
BD 5
BD 6
(INTENSITY OR ATTRIB. FLAG) BD 7
(HIGHLIGHT/BLINK) 8
(TAB DOT) BD 9
(UNDERLINE) BD 10
(SHIFT OUT) BD 11
EIA
EIA
XZ06
RATE SELECT
DATA TERM RDY
ANALOG LOOP
SUPERV XMIT DATA
SEND DATA
REQ TO SEND
SUPERV RCV DATA / RATE INDICATOR
CARRIER DETECT
CLEAR TO SEND
DATA SET RDY
RCV DATA
RING INDICATOR
SERIAL CLOCK T
SERIAL CLOCK R
XZ08
XZ09
XZ01 TO XZ05
DMA
MPX

E. WIRING DIAGRAMS (Cont)

Single-Display Station Arrangements (Cont)

410277 Internal Wiring (Cont)

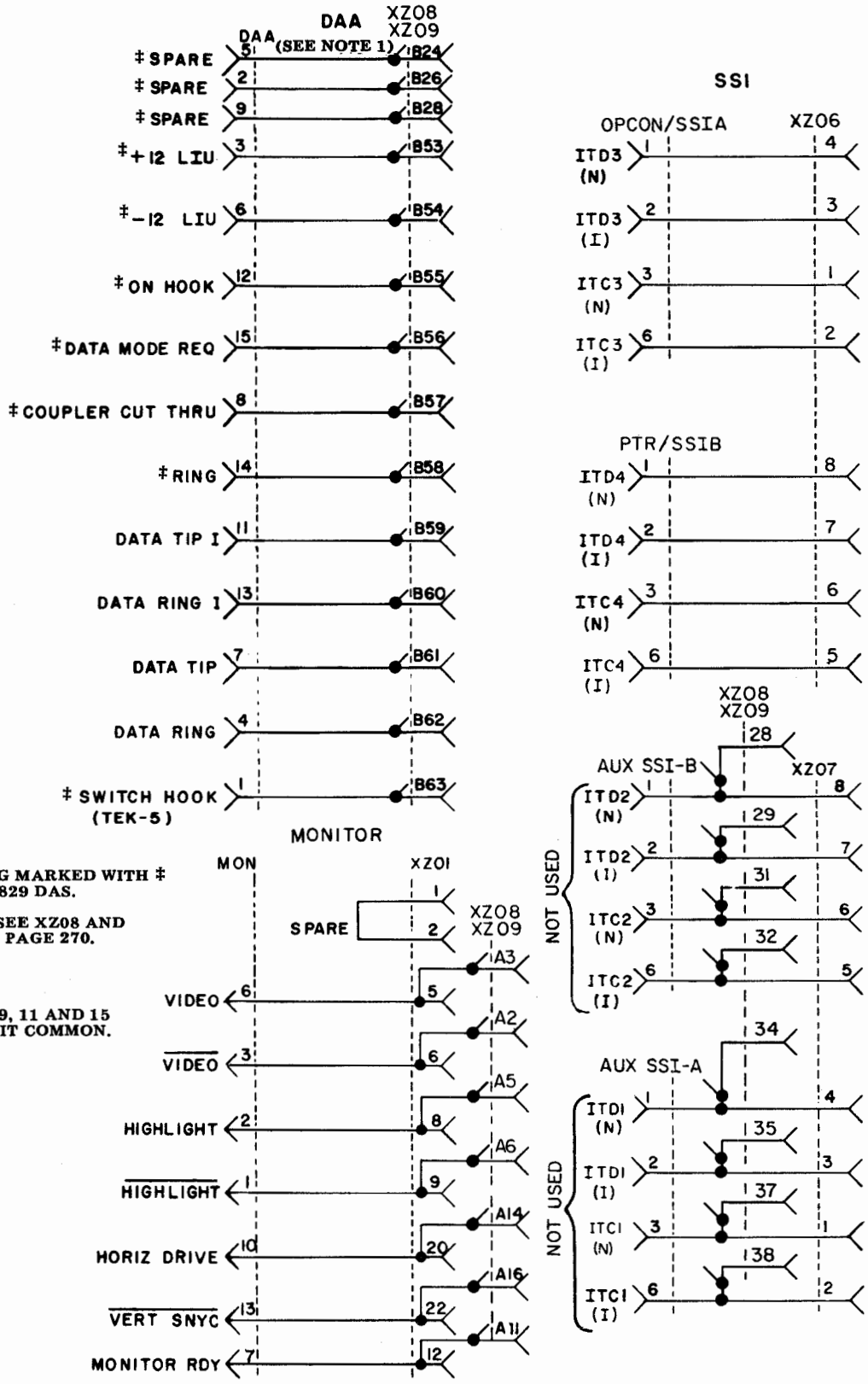

NOTE 1: WIRING MARKED WITH ‡ IS NOT USED BY 829 DAS.

NOTE 2: ALSO SEE XZ08 AND XZ09 WIRING ON PAGE 270.

MONITOR PINS 5, 8, 9, 11 AND 15 CONNECT TO CIRCUIT COMMON.

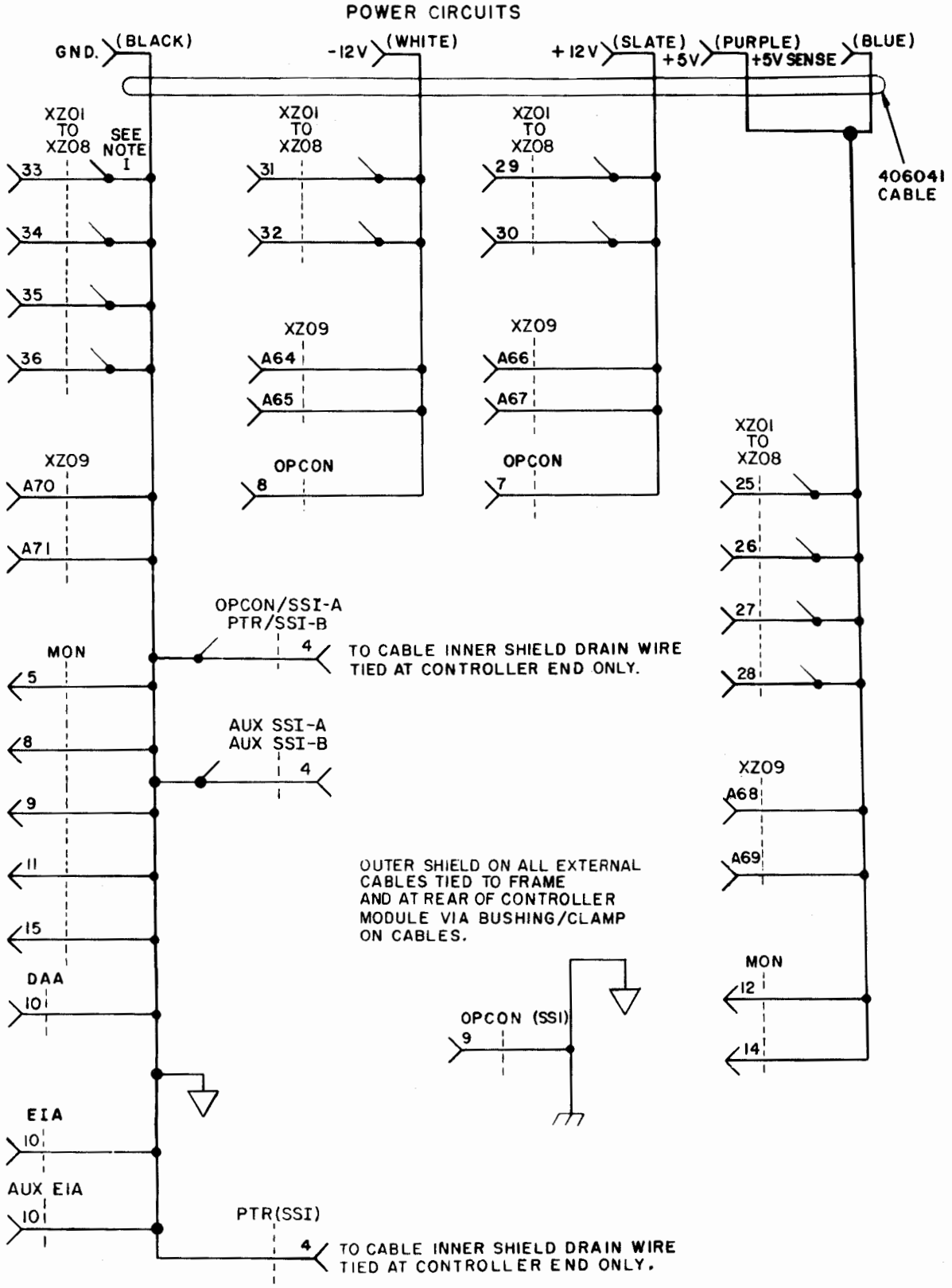
POWER CIRCUITS
GND. (BLACK)
-12V (WHITE)
+12V (SLATE)
+5V (PURPLE)
+5V SENSE (BLUE)
406041 CABLE
XZ01 TO XZ08
SEE NOTE I
33
34
35
36
31
32
29
30
XZ09
A64
A65
A66
A67
OPCON
8
7
A70
A71
25
26
27
28
OPCON/SSI-A
PTR/SSI-B
4
TO CABLE INNER SHIELD DRAIN WIRE TIED AT CONTROLLER END ONLY.
MON
5
8
9
11
15
AUX SSI-A
AUX SSI-B
A68
A69
OUTER SHIELD ON ALL EXTERNAL CABLES TIED TO FRAME AND AT REAR OF CONTROLLER MODULE VIA BUSHING/CLAMP ON CABLES.
DAA
10
OPCON (SSI)
12
14
EIA
AUX EIA
PTR(SSI)
TO CABLE INNER SHIELD DRAIN WIRE TIED AT CONTROLLER END ONLY.

E. WIRING DIAGRAMS (Cont)

Single-Display Station Arrangements (Cont)

410277 Internal Wiring (Cont)

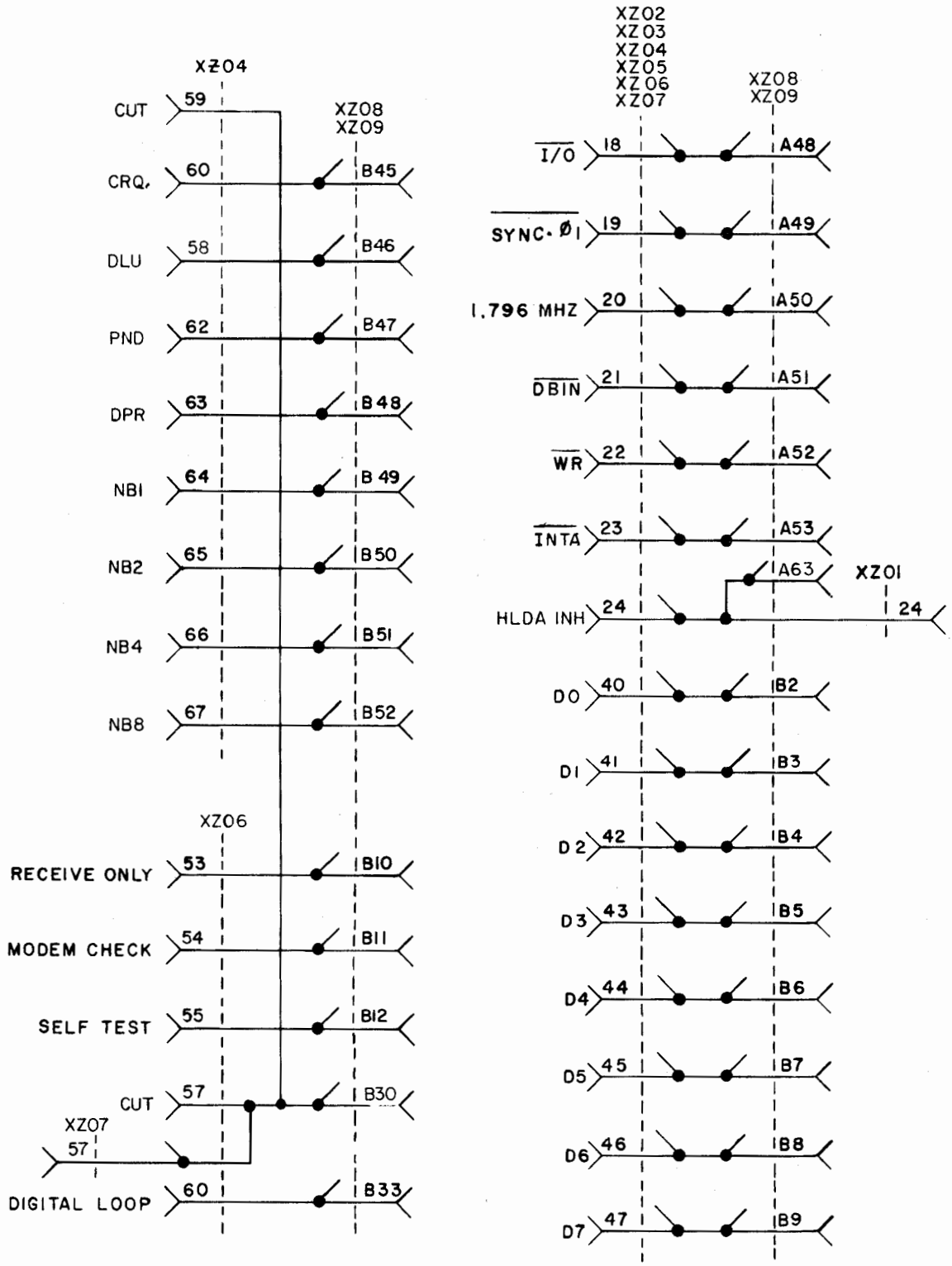

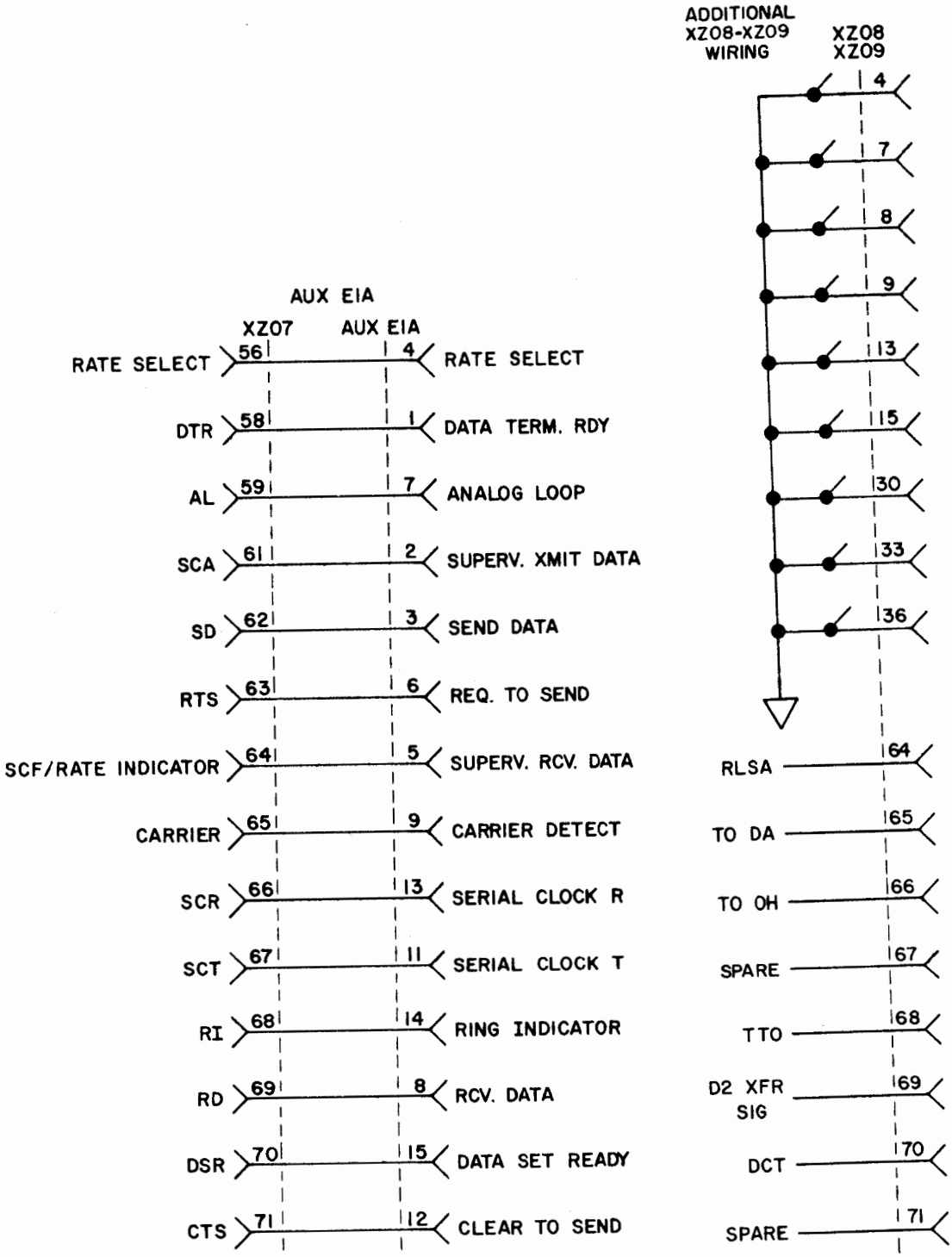
ADDITIONAL
XZ08-XZ09
WIRING
XZ08
XZ09
4
7
8
9
13
15
30
33
36
AUX EIA
XZ07
AUX EIA
RATE SELECT 56 4 RATE SELECT
DTR 58 1 DATA TERM. RDY
AL 59 7 ANALOG LOOP
SCA 61 2 SUPERV. XMIT DATA
SD 62 3 SEND DATA
RTS 63 6 REQ. TO SEND
SCF/RATE INDICATOR 64 5 SUPERV. RCV. DATA
CARRIER 65 9 CARRIER DETECT
SCR 66 13 SERIAL CLOCK R
SCT 67 11 SERIAL CLOCK T
RI 68 14 RING INDICATOR
RD 69 8 RCV. DATA
DSR 70 15 DATA SET READY
CTS 71 12 CLEAR TO SEND
RLSA 64
TO DA 65
TO OH 66
SPARE 67
TTO 68
D2 XFR SIG 69
DCT 70
SPARE 71

E. WIRING DIAGRAMS (Cont)

Single-Display Station Arrangements (Cont)

410276 Internal Wiring

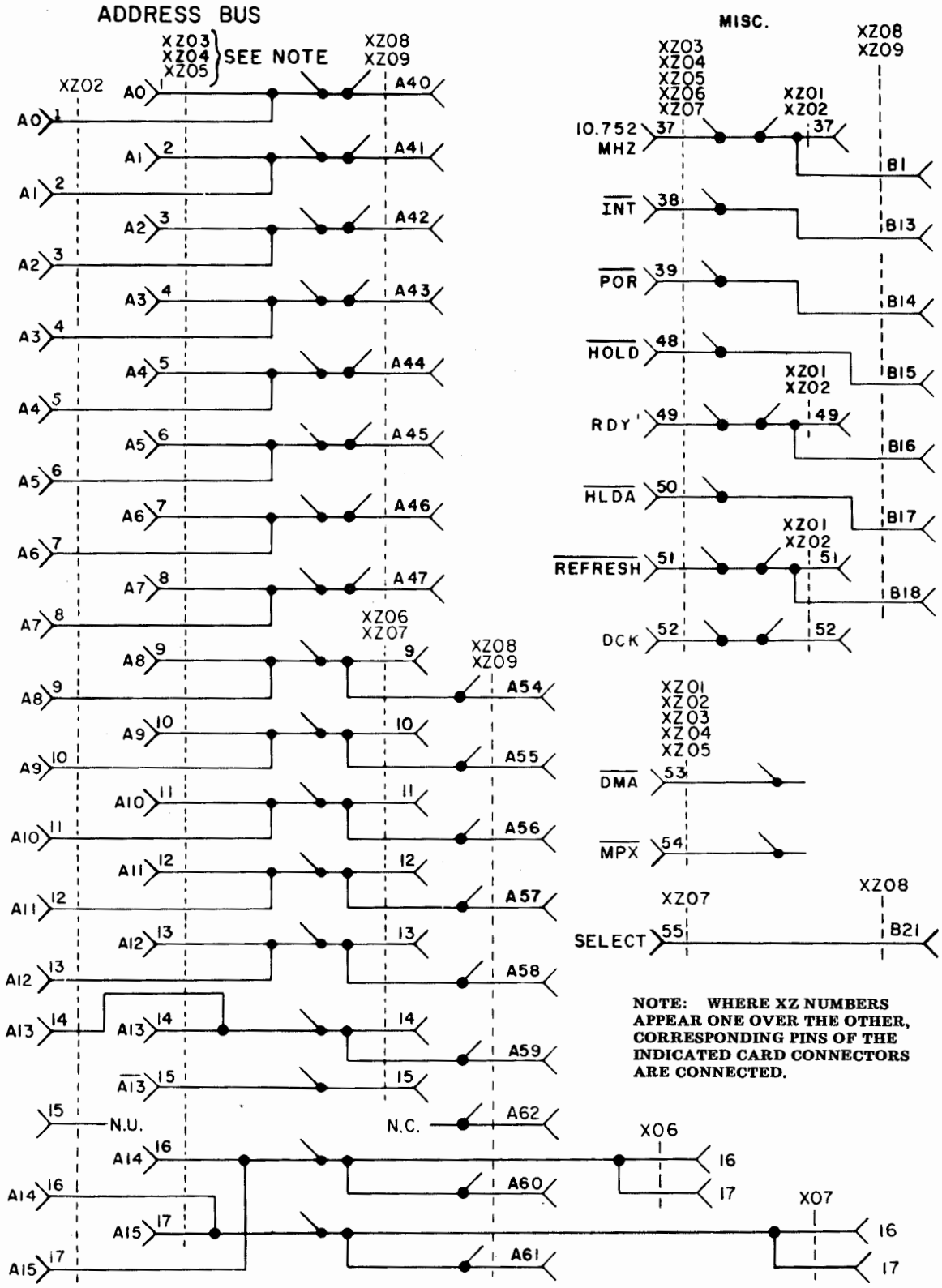

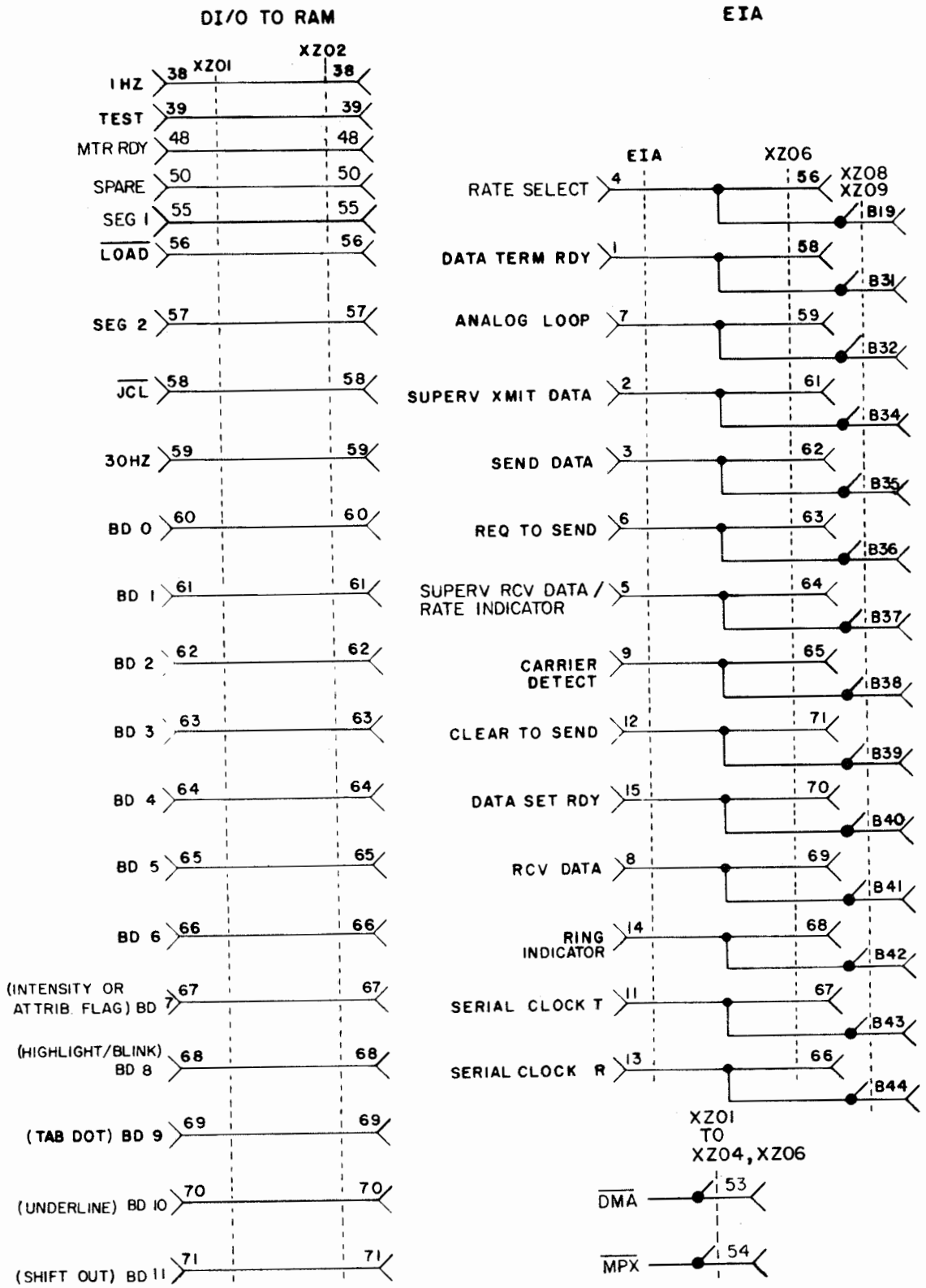
DI/O TO RAM
XZ01
XZ02
1HZ 38 38
TEST 39 39
MTR RDY 48 48
SPARE 50 50
SEG 1 55 55
LOAD 56 56
SEG 2 57 57
JCL 58 58
30HZ 59 59
BD 0 60 60
BD 1 61 61
BD 2 62 62
BD 3 63 63
BD 4 64 64
BD 5 65 65
BD 6 66 66
(INTENSITY OR ATTRIB. FLAG) BD 7 67 67
(HIGHLIGHT/BLINK) BD 8 68 68
(TAB DOT) BD 9 69 69
(UNDERLINE) BD 10 70 70
(SHIFT OUT) BD 11 71 71
EIA
EIA
XZ06
RATE SELECT 4 56 XZ08 XZ09 B19
DATA TERM RDY 1 58 B31
ANALOG LOOP 7 59 B32
SUPERV XMIT DATA 2 61 B34
SEND DATA 3 62 B35
REQ TO SEND 6 63 B36
SUPERV RCV DATA / RATE INDICATOR 5 64 B37
CARRIER DETECT 9 65 B38
CLEAR TO SEND 12 71 B39
DATA SET RDY 15 70 B40
RCV DATA 8 69 B41
RING INDICATOR 14 68 B42
SERIAL CLOCK T 11 67 B43
SERIAL CLOCK R 13 66 B44
XZ01 TO XZ04, XZ06
DMA 53
MPX 54

E. WIRING DIAGRAMS (Cont)

Single-Display Station Arrangements (Cont)

410276 Internal Wiring (Cont)

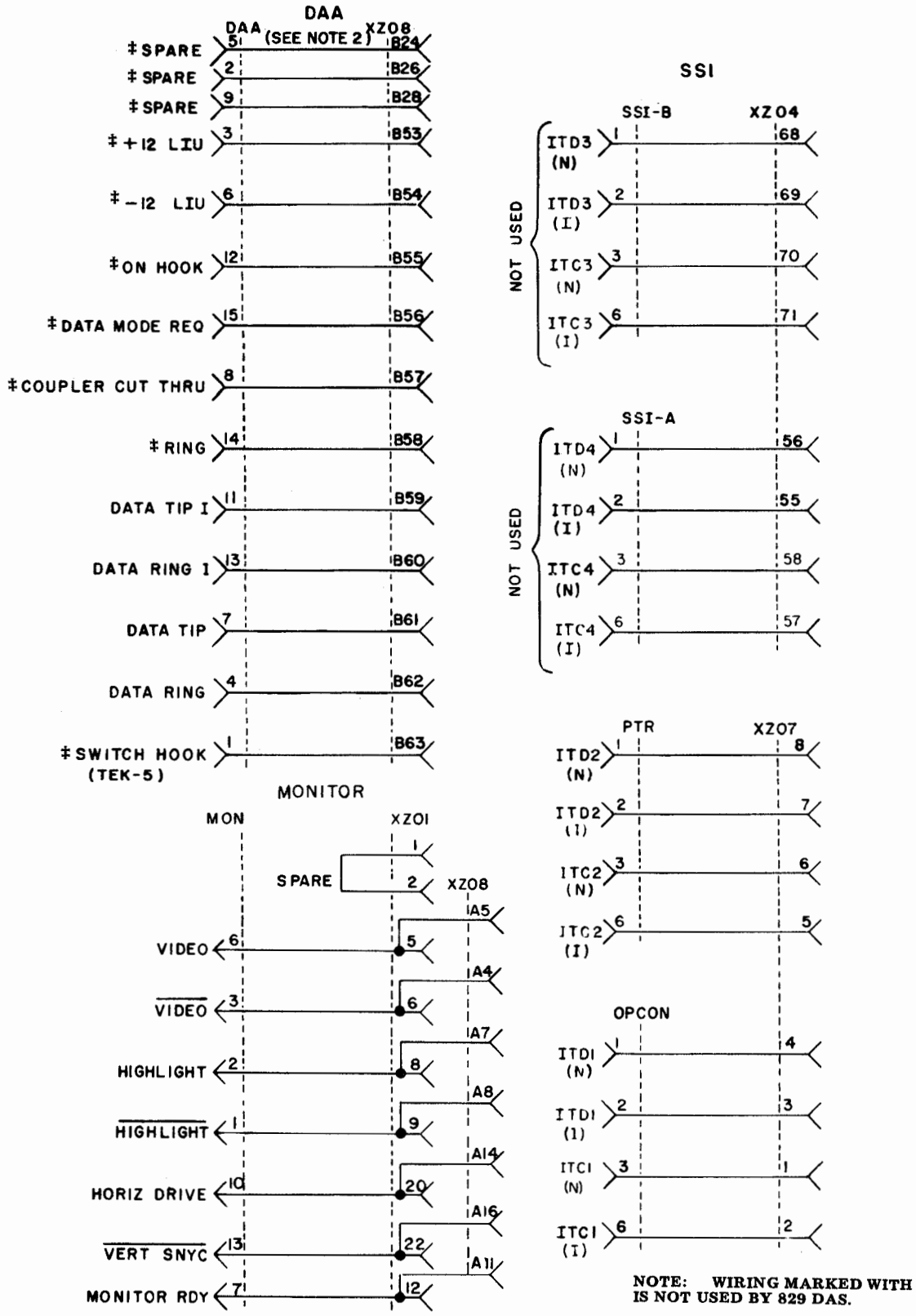

NOTE: WIRING MARKED WITH ‡ IS NOT USED BY 829 DAS.

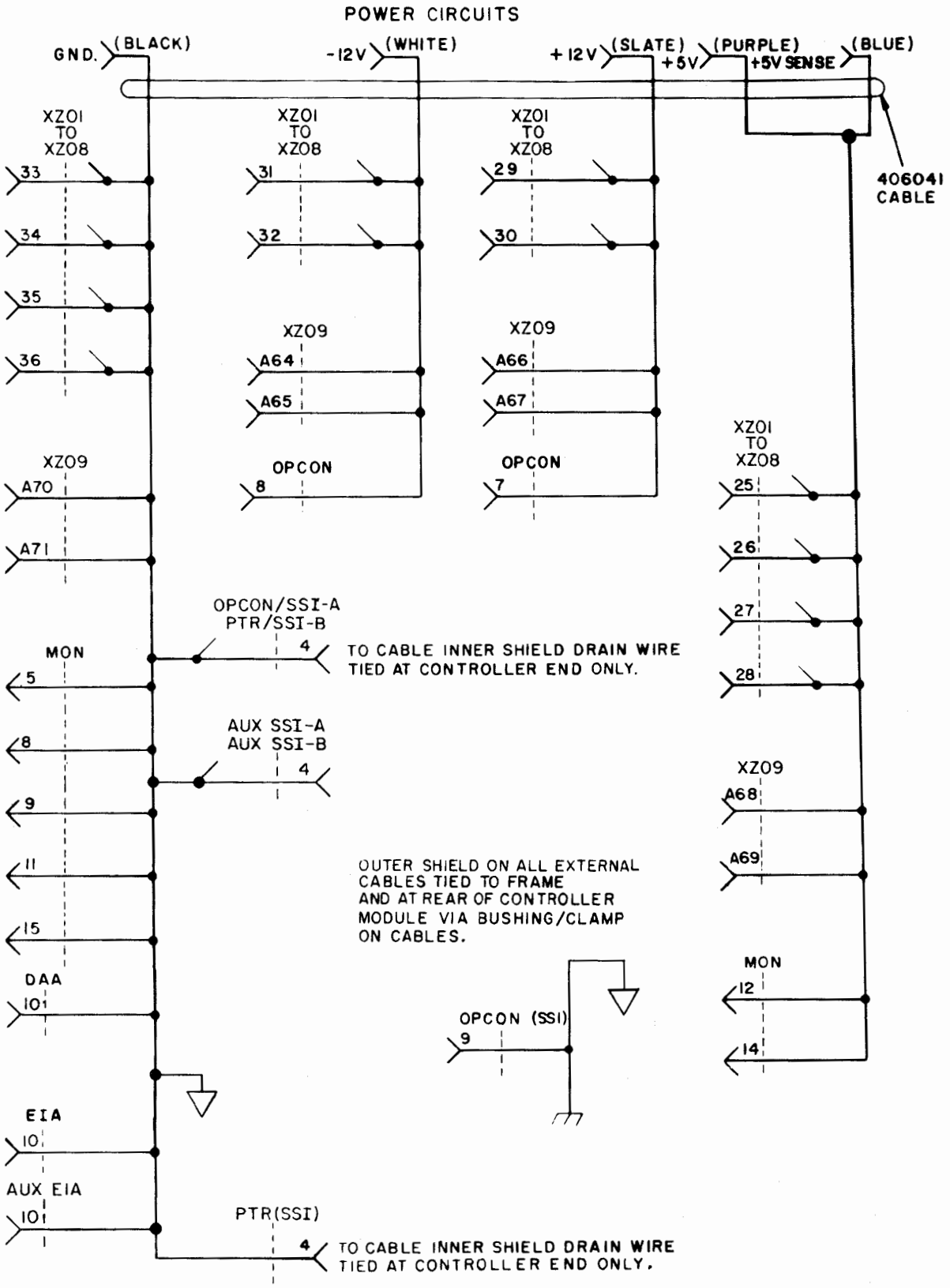
POWER CIRCUITS
GND.
(BLACK)
-12V
(WHITE)
+12V
(SLATE)
+5V
(PURPLE)
+5V SENSE
(BLUE)
406041 CABLE
XZ01 TO XZ08
33
34
35
36
31
32
29
30
XZ09
A64
A65
A66
A67
OPCON
8
7
A70
A71
25
26
27
28
OPCON/SSI-A
PTR/SSI-B
4
TO CABLE INNER SHIELD DRAIN WIRE TIED AT CONTROLLER END ONLY.
MON
5
8
9
11
15
AUX SSI-A
AUX SSI-B
A68
A69
OUTER SHIELD ON ALL EXTERNAL CABLES TIED TO FRAME AND AT REAR OF CONTROLLER MODULE VIA BUSHING/CLAMP ON CABLES.
DAA
10
12
14
OPCON (SSI)
EIA
AUX EIA
PTR(SSI)
TO CABLE INNER SHIELD DRAIN WIRE TIED AT CONTROLLER END ONLY.

E. WIRING DIAGRAMS (Cont)

Single-Display Station Arrangements (Cont)

410276 Internal Wiring (Cont)

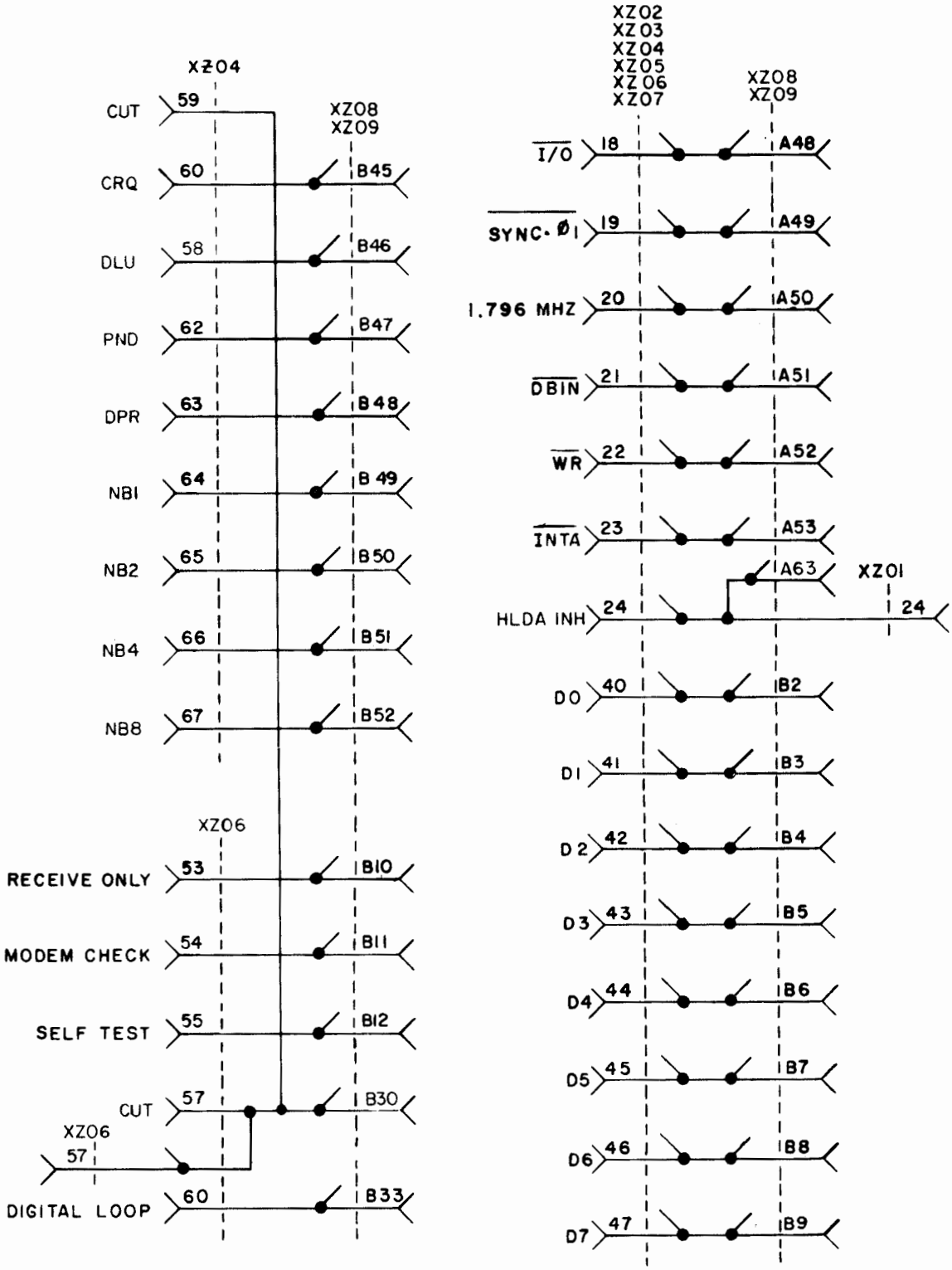

ROP Cabinet

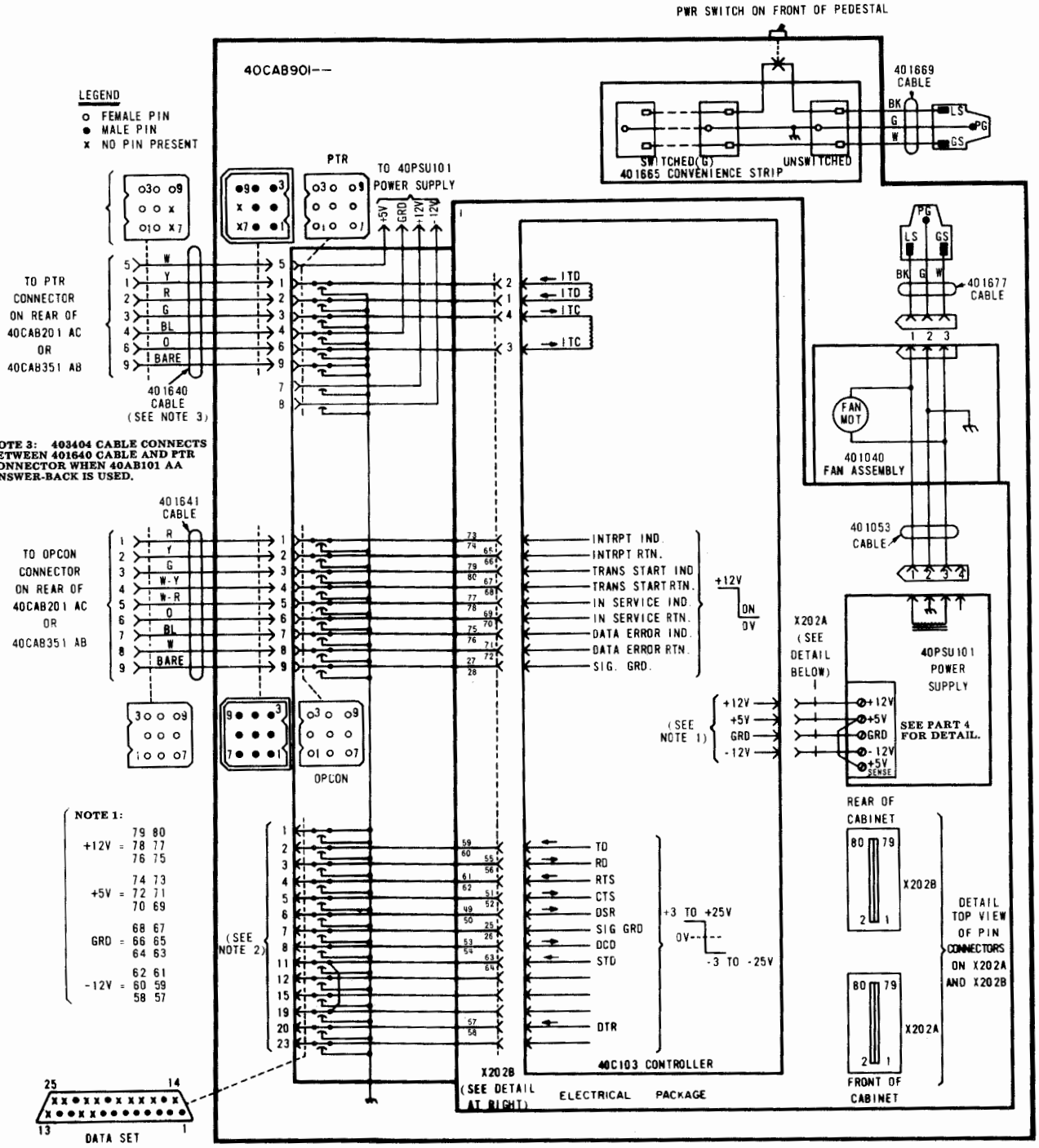

NOTE 2: TO 341896 INTERFACE CABLE (ROP), 341895 PRINTER CABLE (KD AND ROP), OR 345613 INTERFACE CABLE (KD AND ROP OR KDP AND ROP).

NOTE 4: 401665 AC DISTRIBUTION ASSEMBLY EARLY DESIGN WITH ON-OFF SWITCH MOUNTED ON THE OUTSIDE OF CABINET. 407285 AC DISTRIBUTION ASSEMBLY LATE DESIGN WITH ON-OFF SWITCH MOUNTED ON THE AC DISTRIBUTION ASSEMBLY AND INSIDE OF CABINET.

E. WIRING DIAGRAMS (Cont)

ROP Cabinet (Cont)

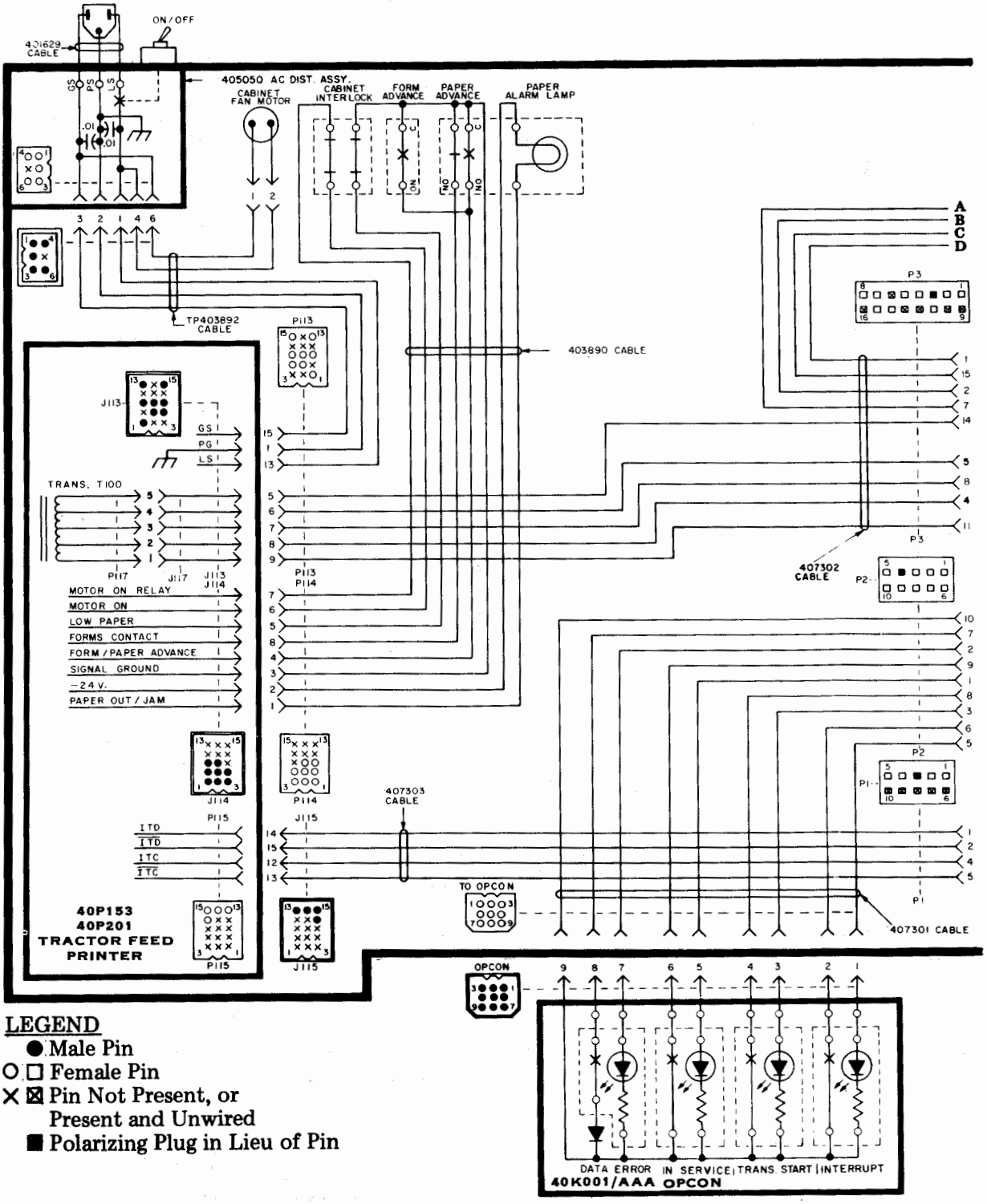

LEGEND

- ● Male Pin
- ○ □ Female Pin
- X ⊠ Pin Not Present, or Present and Unwired
- ■ Polarizing Plug in Lieu of Pin

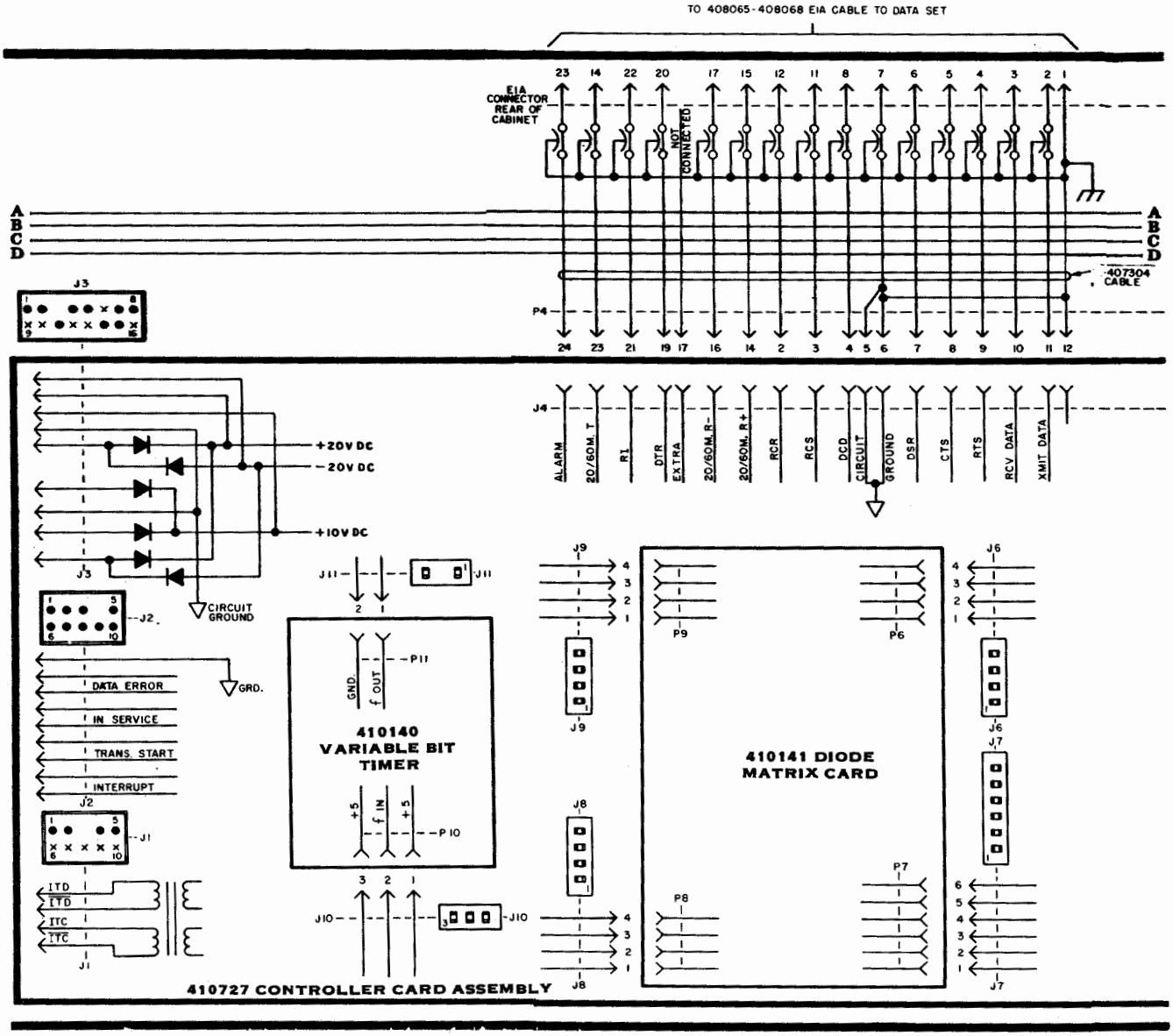
TO 408065-408068 EIA CABLE TO DATA SET
EIA CONNECTOR REAR OF CABINET
NOT CONNECTED
A
B
C
D
407304 CABLE
P4
J3
J4
ALARM
20/60M. T
R1
DTR
EXTRA
20/60M. R-
20/60M. R+
RCR
RCS
DCD
CIRCUIT GROUND
DSR
CTS
RTS
RCV DATA
XMIT DATA
+20V DC
-20V DC
+10V DC
CIRCUIT GROUND
J2
GRD.
DATA ERROR
IN SERVICE
TRANS. START
INTERRUPT
J1
ITD
ITC
J11
J10
GND.
f OUT
P11
410140
VARIABLE BIT
TIMER
+5
f IN
P10
J9
J8
J6
J7
P9
P6
P8
P7
410141 DIODE
MATRIX CARD
410727 CONTROLLER CARD ASSEMBLY

E. WIRING DIAGRAMS (Cont)

ROP Cabinet (Cont)

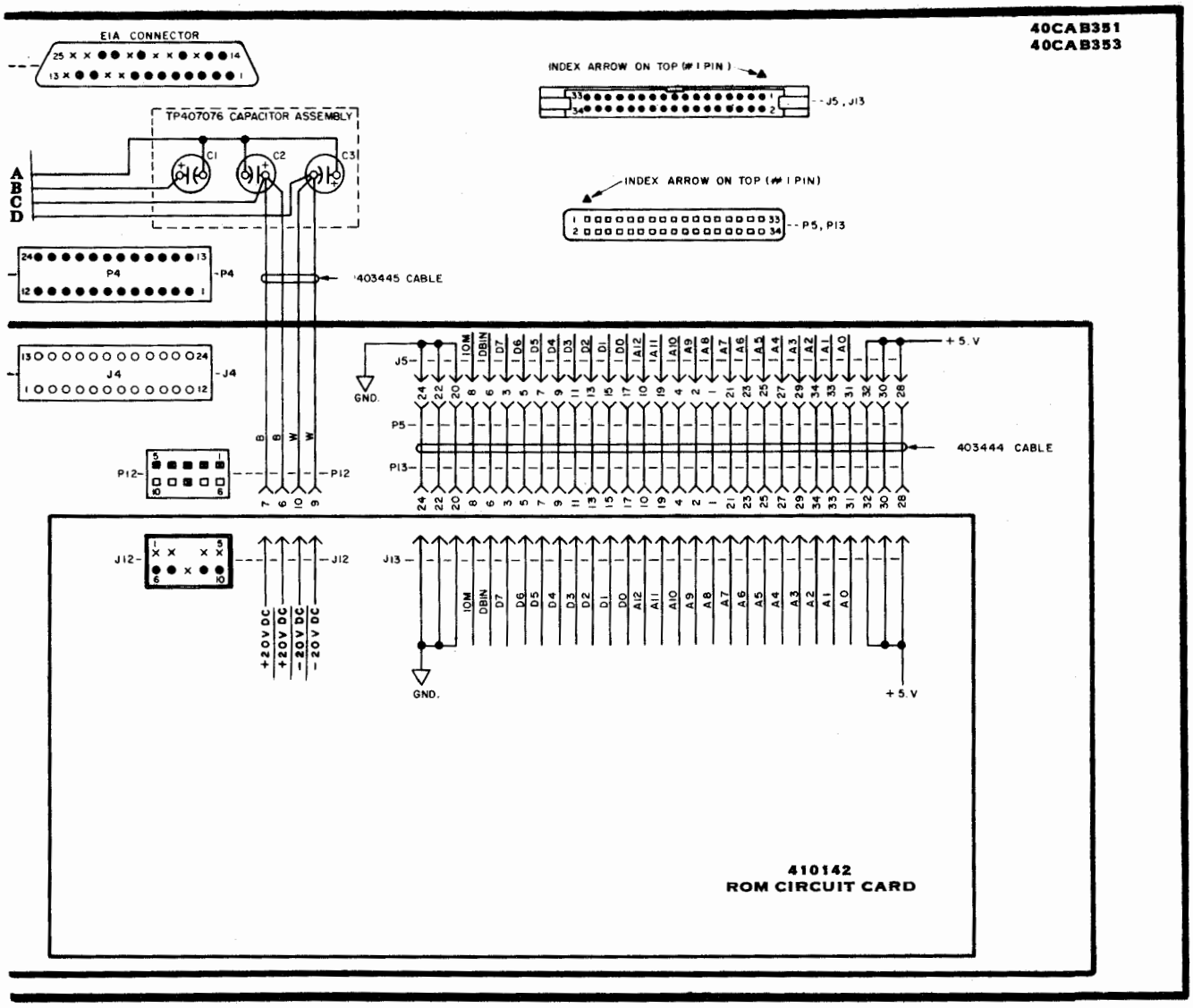

NOTES

E. WIRING DIAGRAMS (Cont)

ROP Cabinet With Integrated Controller (40C303AA/001)

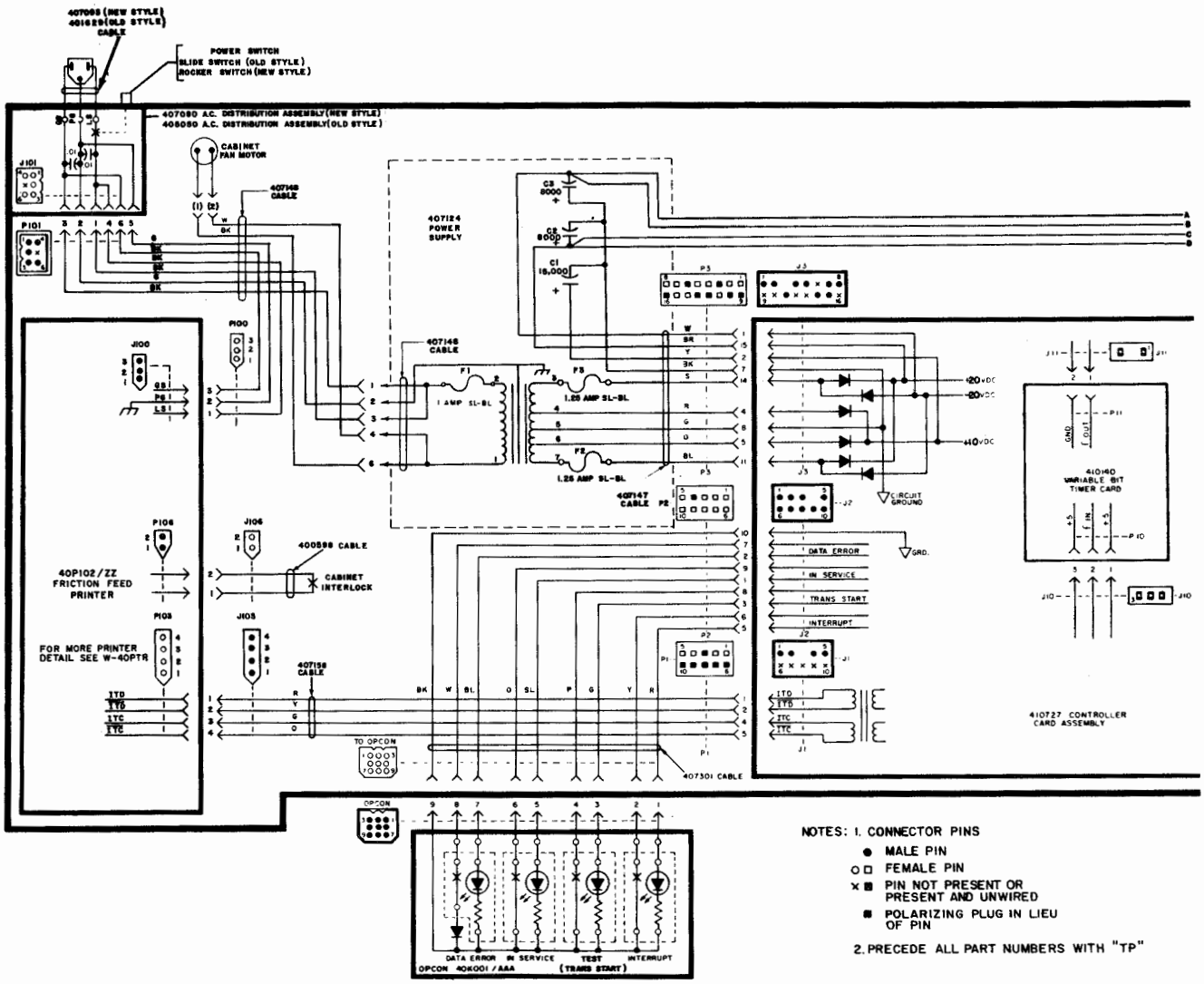

NOTES: 1. CONNECTOR PINS

- ● MALE PIN
- ○ □ FEMALE PIN
- × ■ PIN NOT PRESENT OR PRESENT AND UNWIRED
- ■ POLARIZING PLUG IN LIEU OF PIN

2. PRECEDE ALL PART NUMBERS WITH "TP"

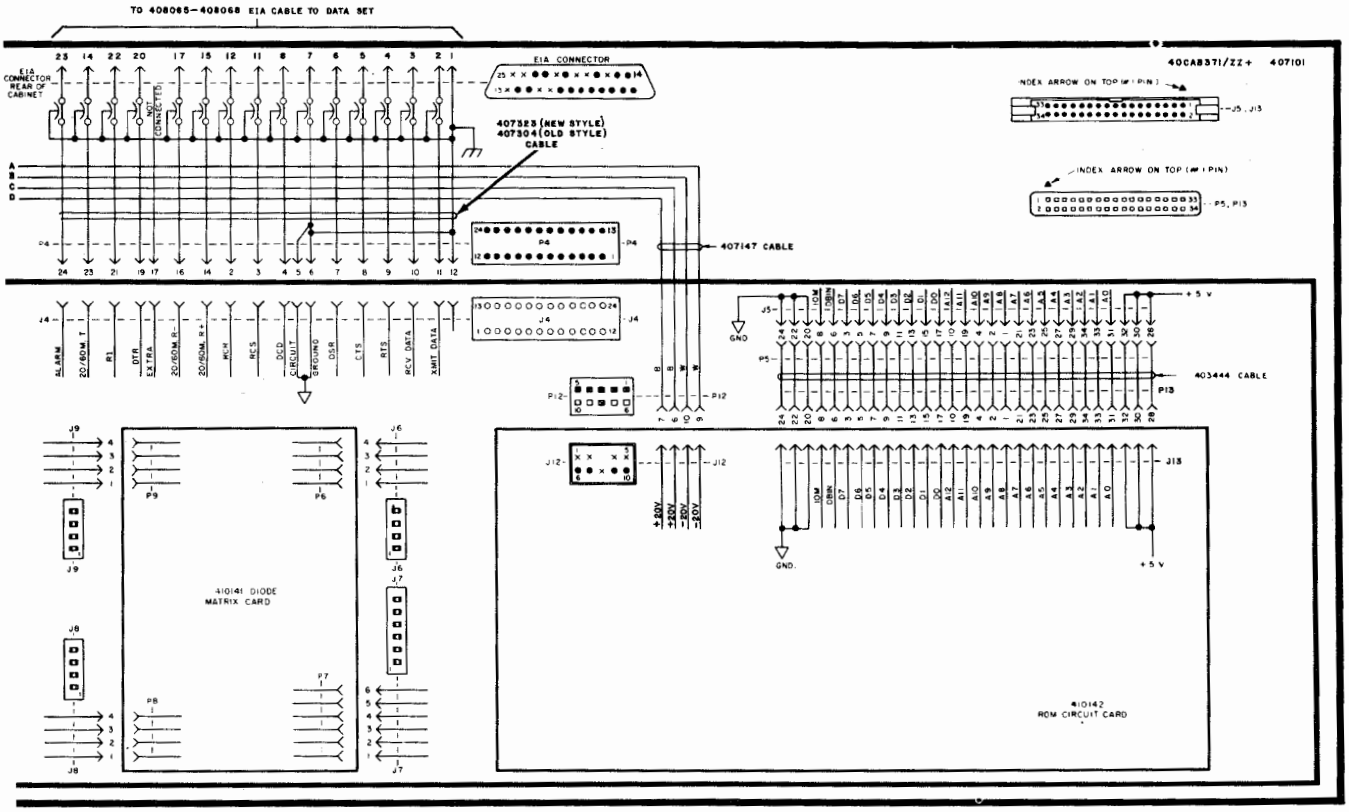

NOTES: 1. CONNECTOR PINS

- ● MALE PIN
- ○ □ FEMALE PIN
- × ▣ PIN NOT PRESENT OR PRESENT AND UNWIRED
- ■ POLARIZING PLUG IN LIEU OF PIN

2. PRECEDE ALL PART NUMBERS WITH "TP"

E. WIRING DIAGRAMS (Cont)

ROP Cabinet With Integrated Controller (40C303AA/001) (Cont)

NOTE: Early design ac distribution assembly has two (2) 3-pin connectors, interim and late design have one (1) 6-pin connector.

Early Design	Interim Design	Late Design
400618 assembly	405050 assembly	407090 assembly
401629 assembly	401629 assembly	407093 cable
405545 cable	403892 cable	403892 cable

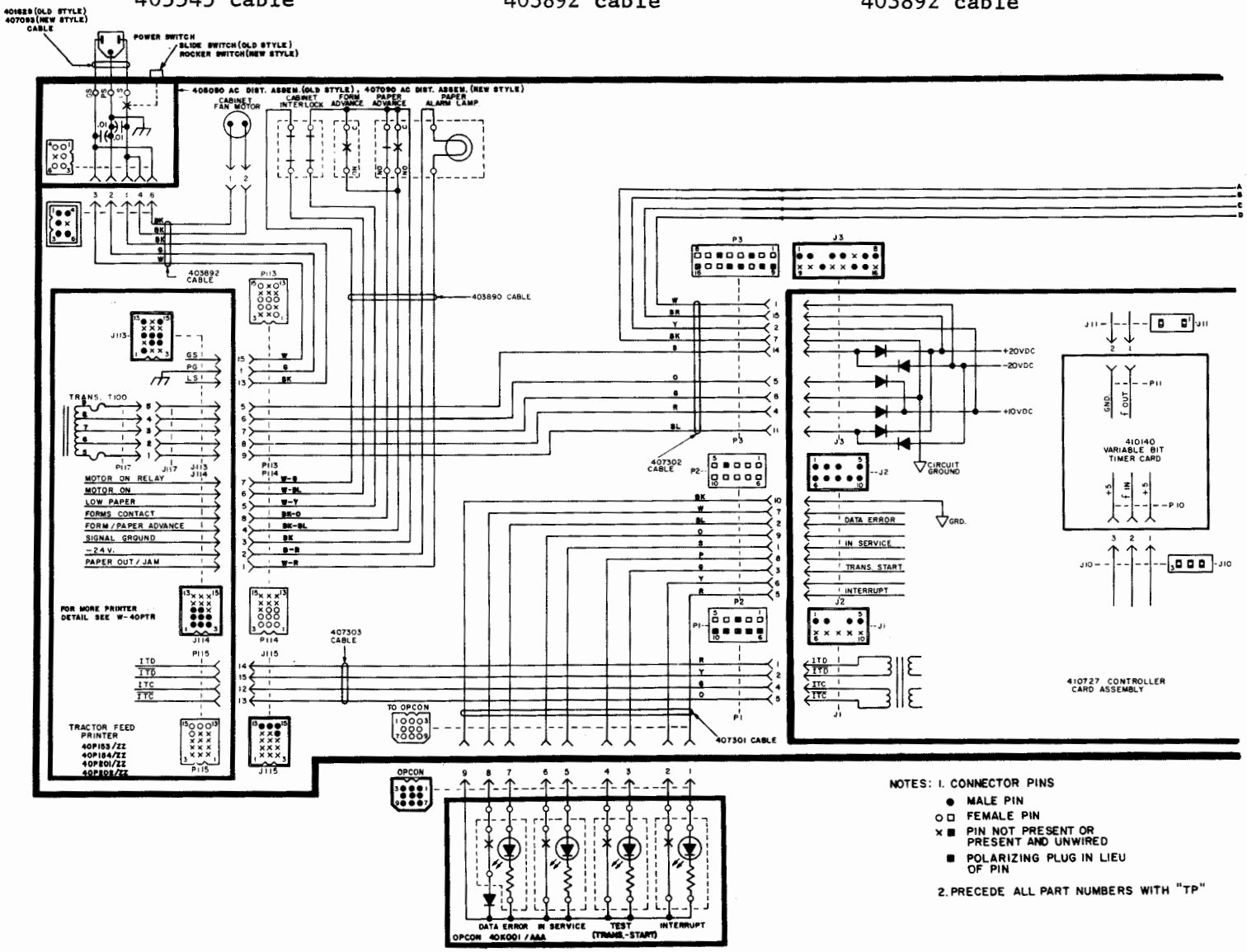

NOTES: 1. CONNECTOR PINS

- ● MALE PIN
- ○□ FEMALE PIN
- ×■ PIN NOT PRESENT OR PRESENT AND UNWIRED
- ■ POLARIZING PLUG IN LIEU OF PIN

2. PRECEDE ALL PART NUMBERS WITH "TP"

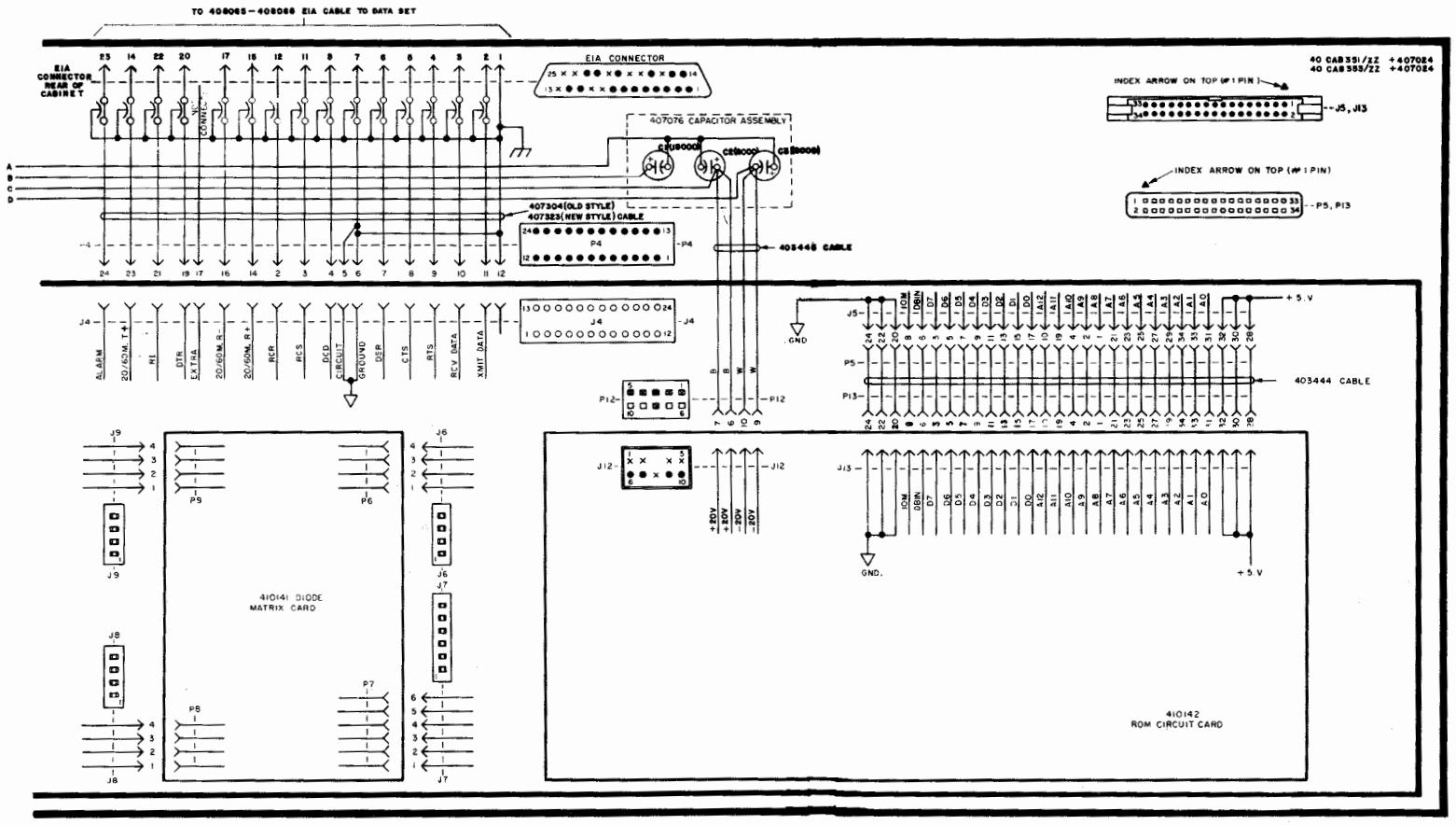

NOTES: 1. CONNECTOR PINS

- ● MALE PIN
- ○ □ FEMALE PIN
- × ■ PIN NOT PRESENT OR PRESENT AND UNWIRED
- ■ POLARIZING PLUG IN LIEU OF PIN

2. PRECEDE ALL PART NUMBERS WITH "TP"

E. WIRING DIAGRAMS (Cont)

ROP Cabinet With Integrated Controller (40C303AC/003)

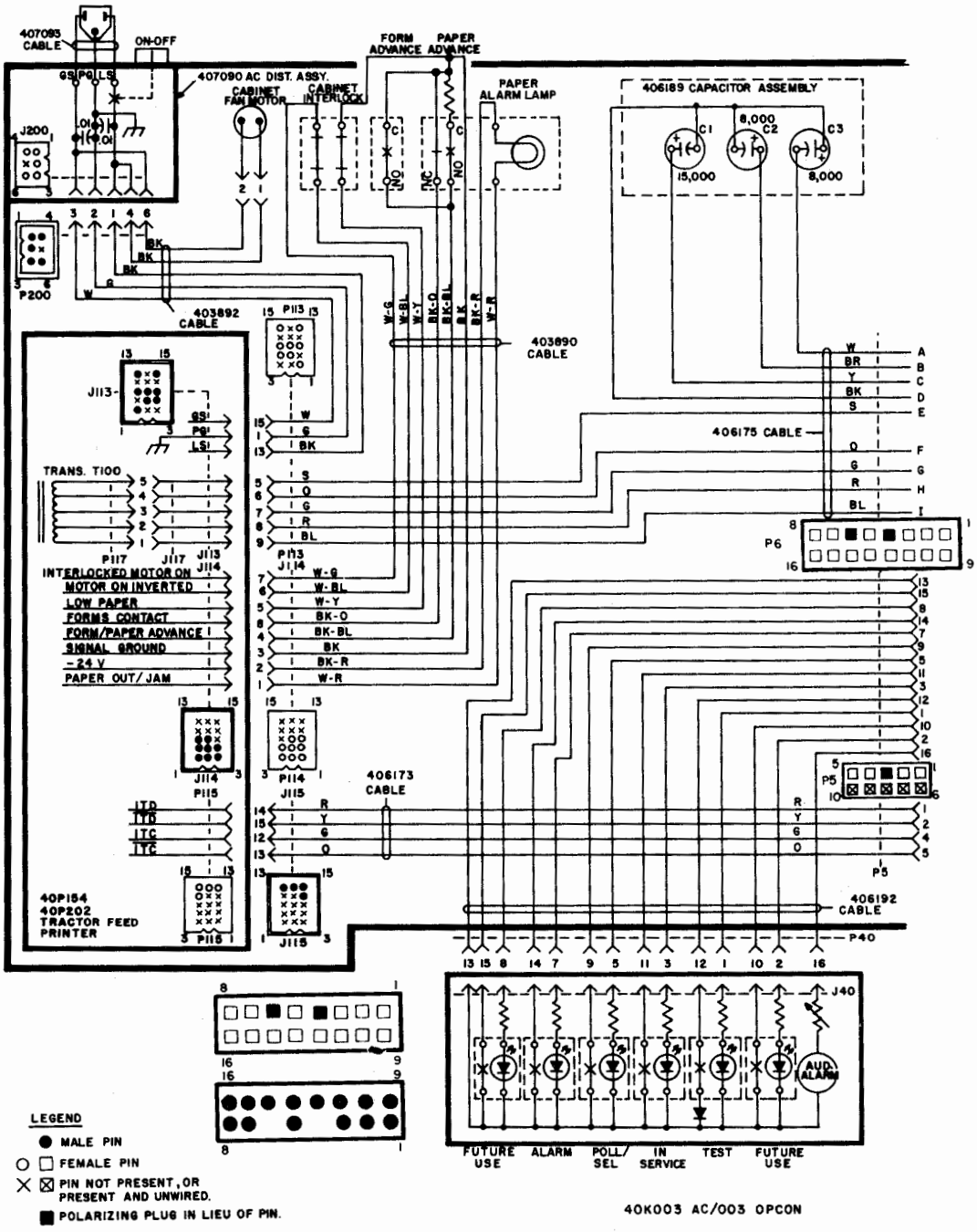

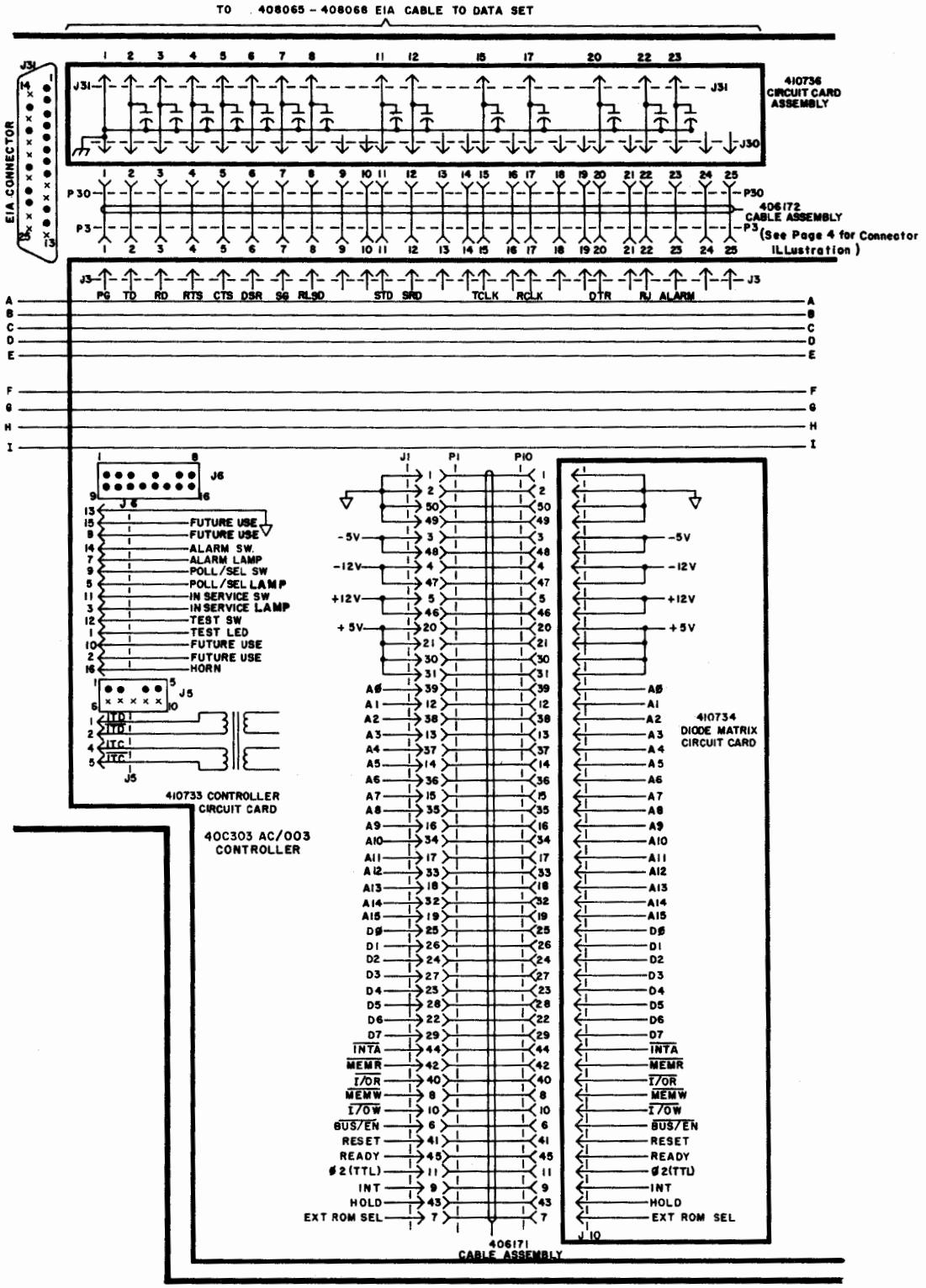
TO 408065 - 408066 EIA CABLE TO DATA SET
EIA CONNECTOR
J31
J30
410736 CIRCUIT CARD ASSEMBLY
P30
P3
406172 CABLE ASSEMBLY
(See Page 4 for Connector ILLustration)
J3
PG TD RD RTS CTS DSR SG RLSD STD SRD TCLK RCLK DTR RI ALARM
J6
FUTURE USE
FUTURE USE
ALARM SW.
ALARM LAMP
POLL/SEL SW
POLL/SEL LAMP
IN SERVICE SW
IN SERVICE LAMP
TEST SW
TEST LED
FUTURE USE
FUTURE USE
HORN
J5
ITD
ITD
ITC
ITC
410733 CONTROLLER CIRCUIT CARD
40C303 AC/003 CONTROLLER
J1
P1
P10
-5V
-12V
+12V
+5V
A0 A1 A2 A3 A4 A5 A6 A7 A8 A9 A10 A11 A12 A13 A14 A15
D0 D1 D2 D3 D4 D5 D6 D7
INTA
MEMR
I/OR
MEMW
I/OW
BUS/EN
RESET
READY
Ø2(TTL)
INT
HOLD
EXT ROM SEL
406171 CABLE ASSEMBLY
410734 DIODE MATRIX CIRCUIT CARD
J10

E. WIRING DIAGRAMS (Cont)

ROP Cabinet With Integrated Controller (40C303AC/003) (Cont)

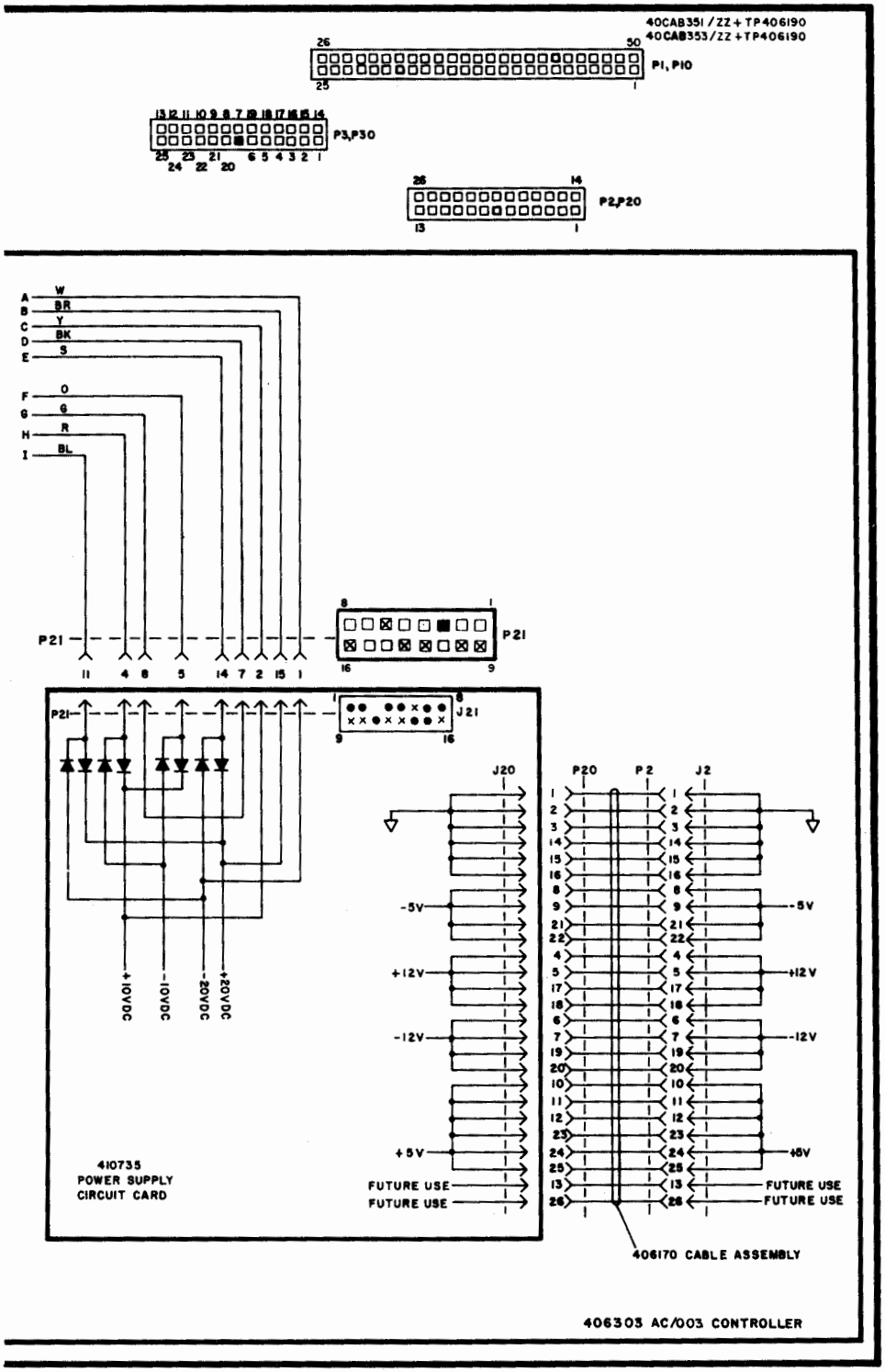

NOTES

E. WIRING DIAGRAMS (Cont)

Printer Cabinets

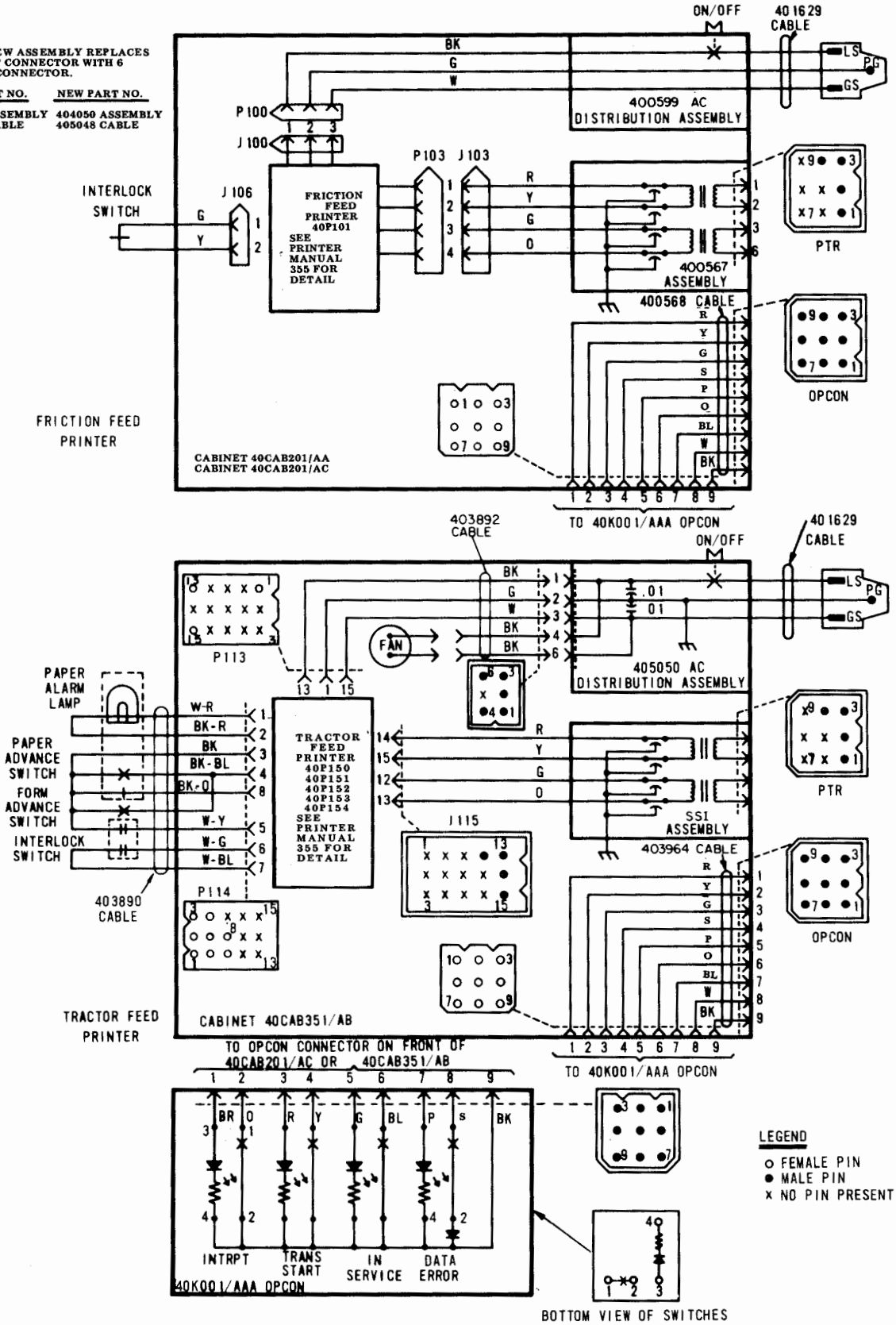

Forms Access Printer Cabinet

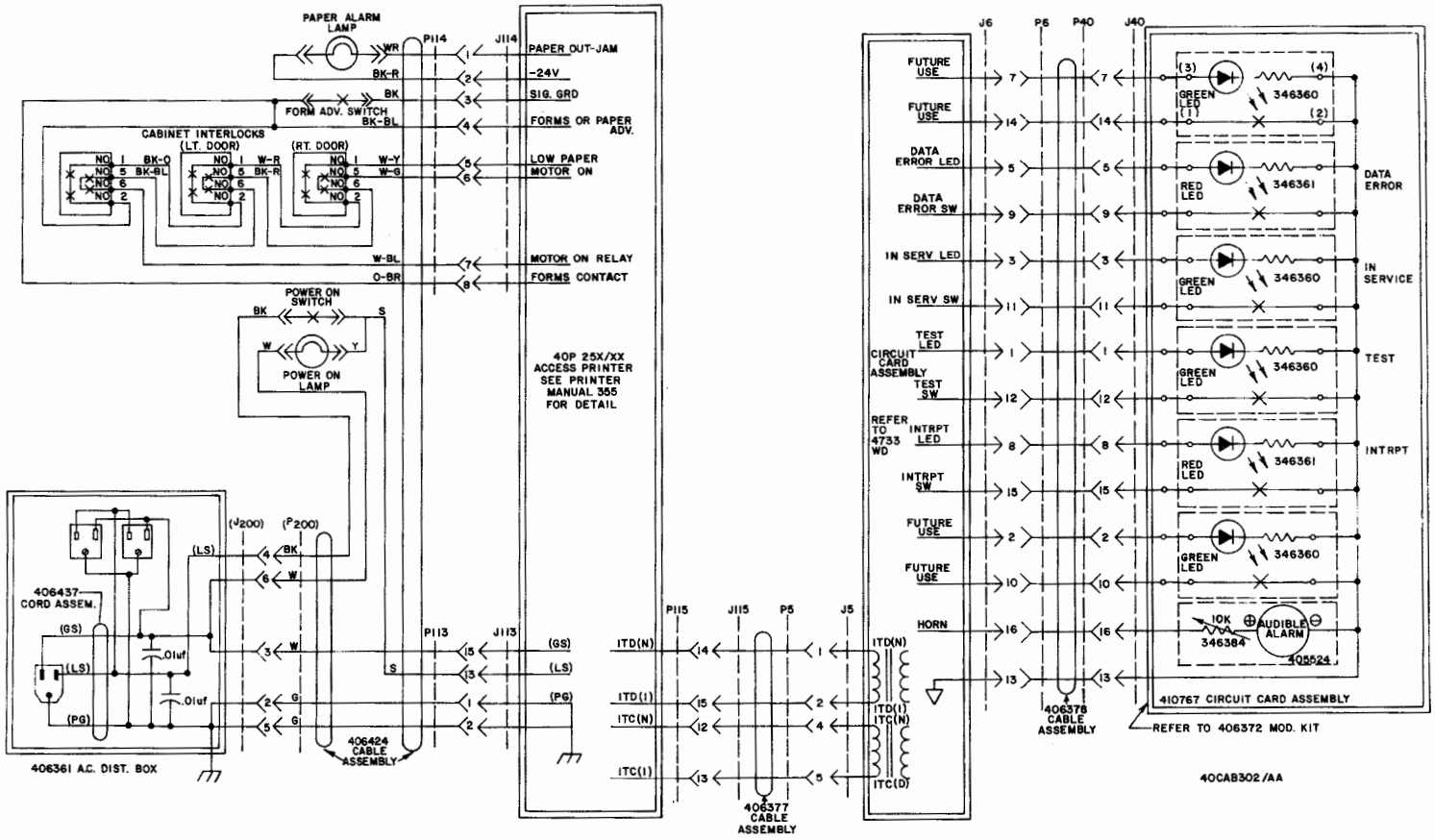

E. WIRING DIAGRAMS (Cont)

Forms Access Printer Cabinet (Cont)

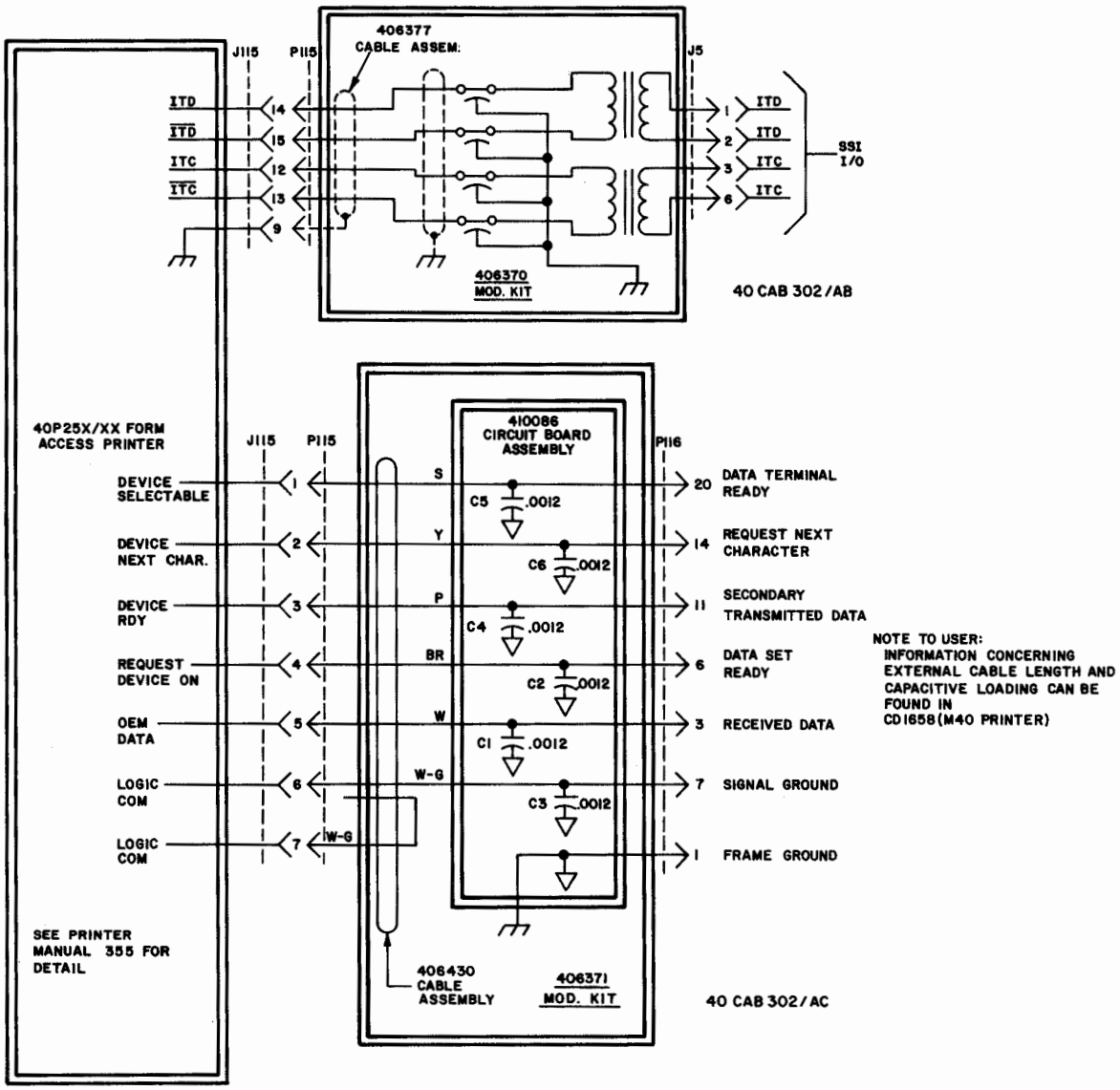

NOTE 1: The 406372 modification kit when added to a 40CAB302/ZZ cabinet core forms a 40CAB302/AA cabinet. The 406370 modification kit when added to a 40CAB302/ZZ cabinet core forms a 40CAB302/AB cabinet. The 406371 modification kit when added to a 40CAB302/ZZ cabinet core forms a 40CAB302/AC cabinet.

NOTE 2: Refer to WDP0532 for further forms access printer cabinet information.

F. CABLE INTERCONNECTION

The following illustrations are provided to assist in interconnecting the cables between the Model 40 components in the various set and station configurations.

Model 40 ROP Set or Station

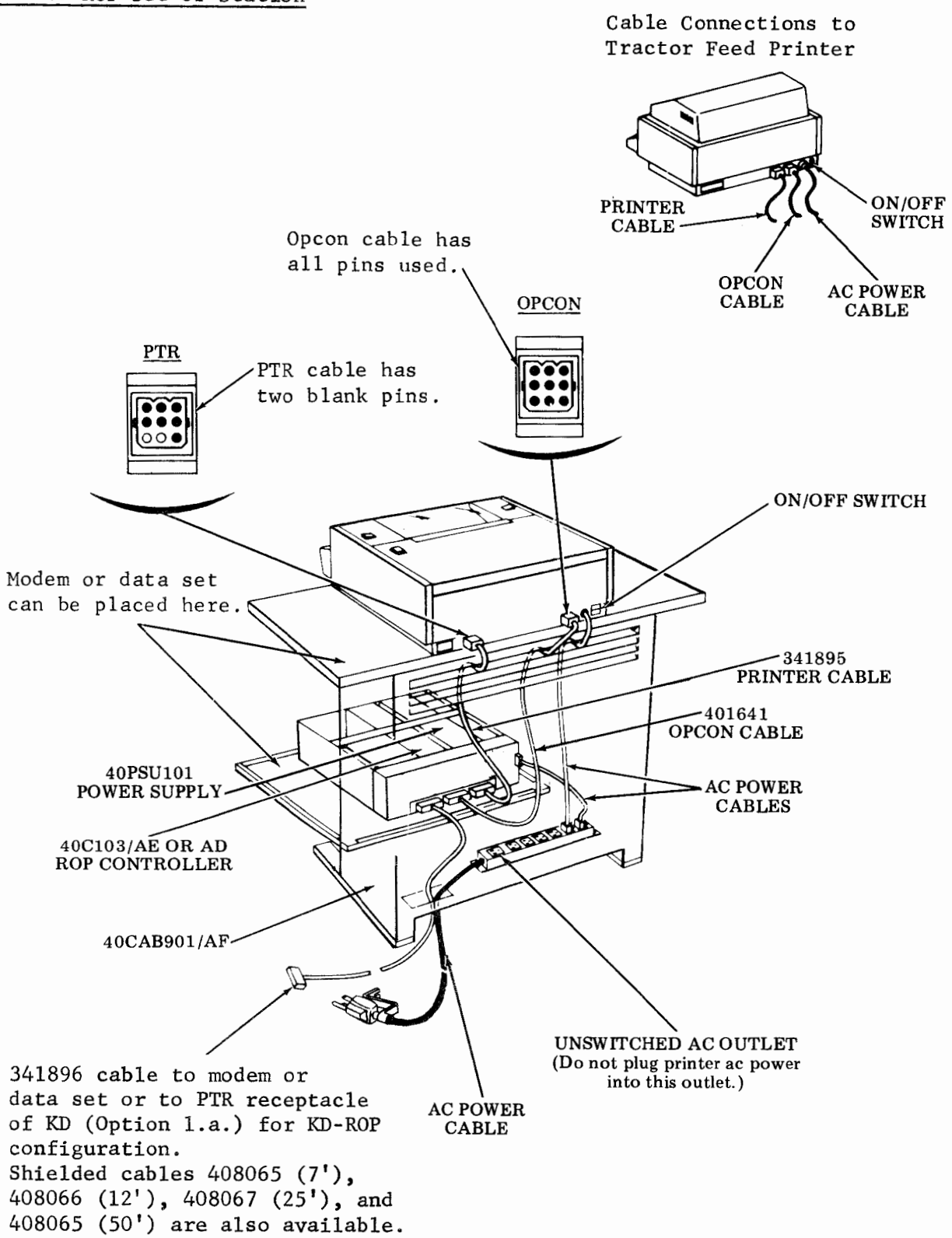

341896 cable to modem or data set or to PTR receptacle of KD (Option 1.a.) for KD-ROP configuration.
Shielded cables 408065 (7'), 408066 (12'), 408067 (25'), and 408065 (50') are also available.

F. CABLE INTERCONNECTION (Cont)

Model 40 KD Station

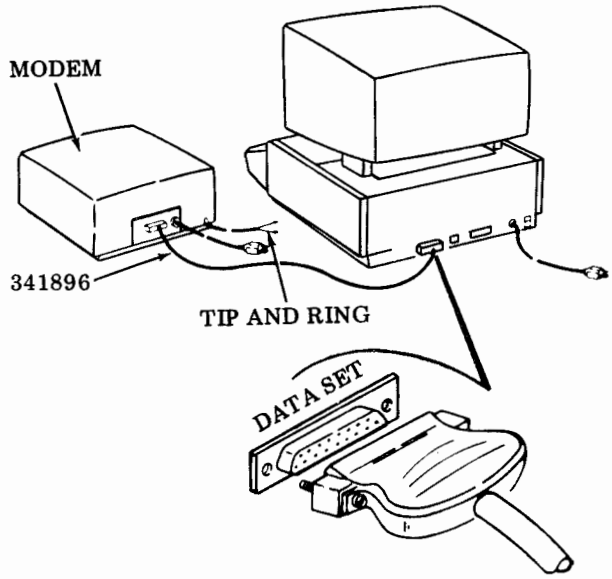

NOTE: This station arrangement may also use a pedestal, with the data set mounted in the pedestal.

Model 40 KDP Set -- Adjacent Logic
(Printer Under Monitor -- Friction Feed Only)

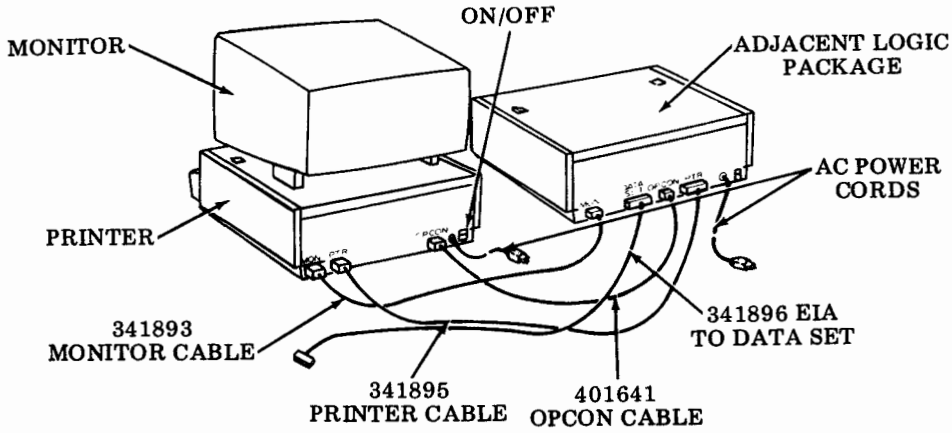

Model 40 KDP Set -- Logic in Pedestal
(Printer Under Monitor -- Friction Feed Only)

403399 modification kit provides attendant selectable switches mounted on front of pedestal door. Used with 403400 modification kit providing attendant selectable feature in Teletypewriter compatible sets.

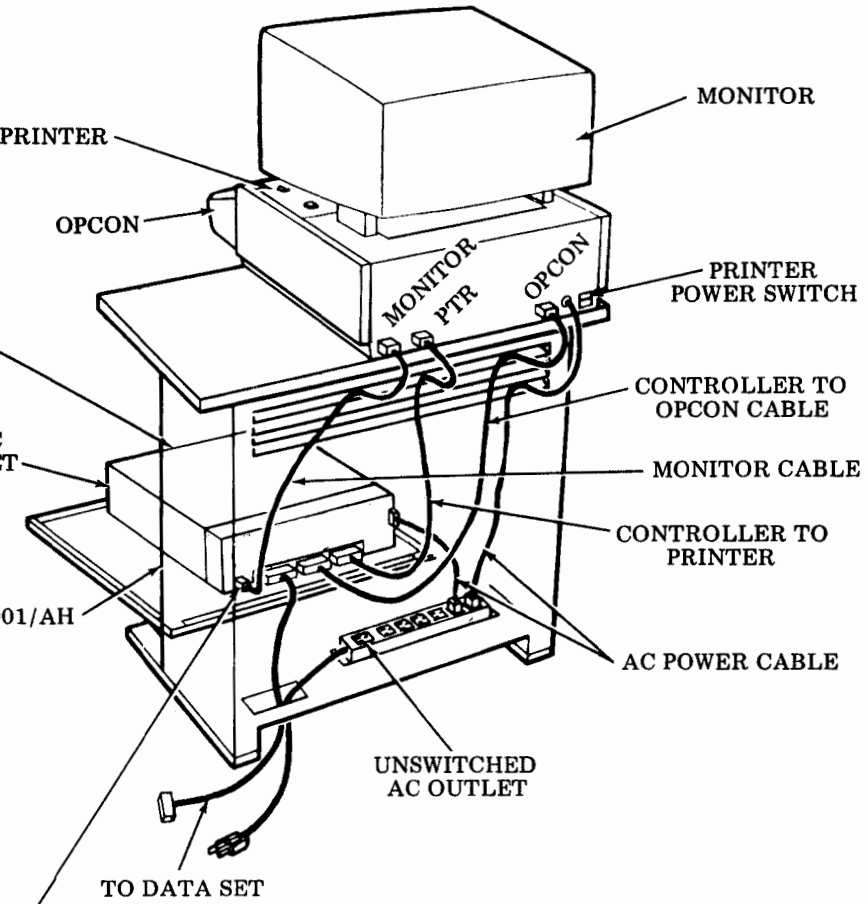

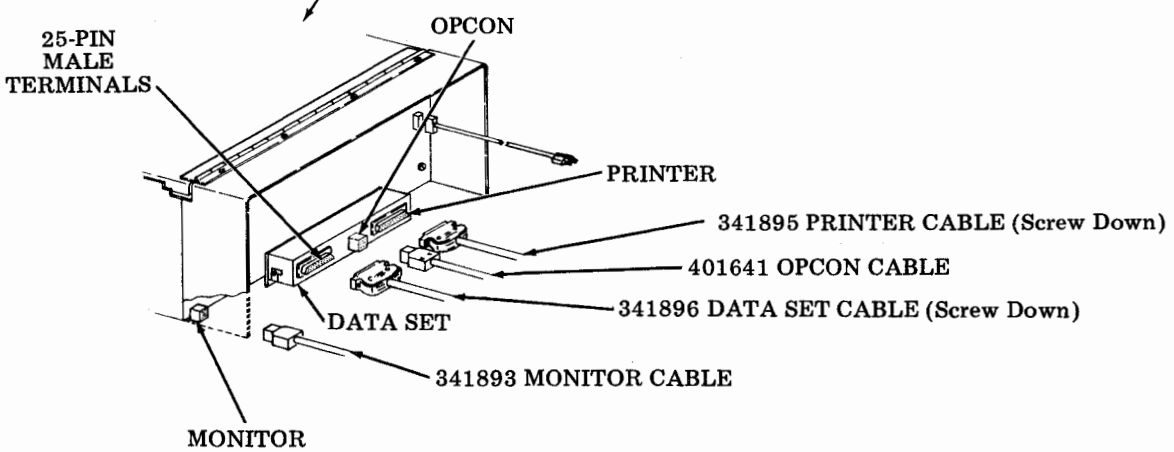

F. CABLE INTERCONNECTION (Cont)

Model 40 KDP Station
(Adjacent Printer -- Friction or Tractor Feed)

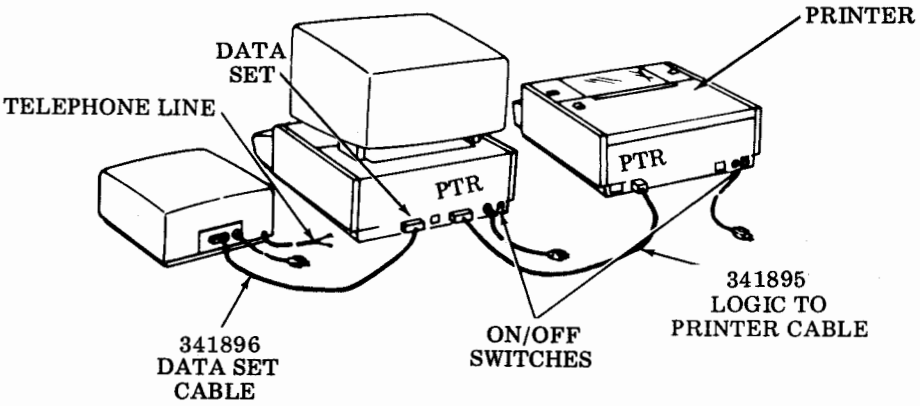

Model 40 KDP Set
(Adjacent Printer on Same Pedestal -- Friction Feed Only)

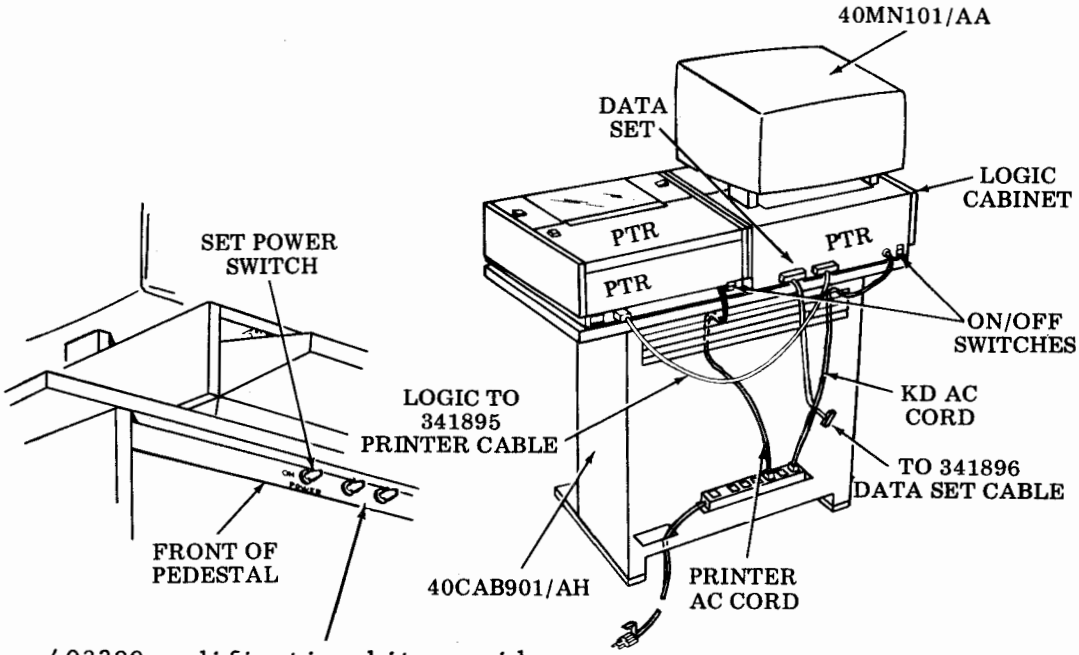

403399 modification kit provides attendant selectable switches mounted on front of pedestal door. Used with 403400 modification kit providing attendant selectable feature in Teletypewriter compatible sets.

Model 40 KD Station With 9140 Station Controller

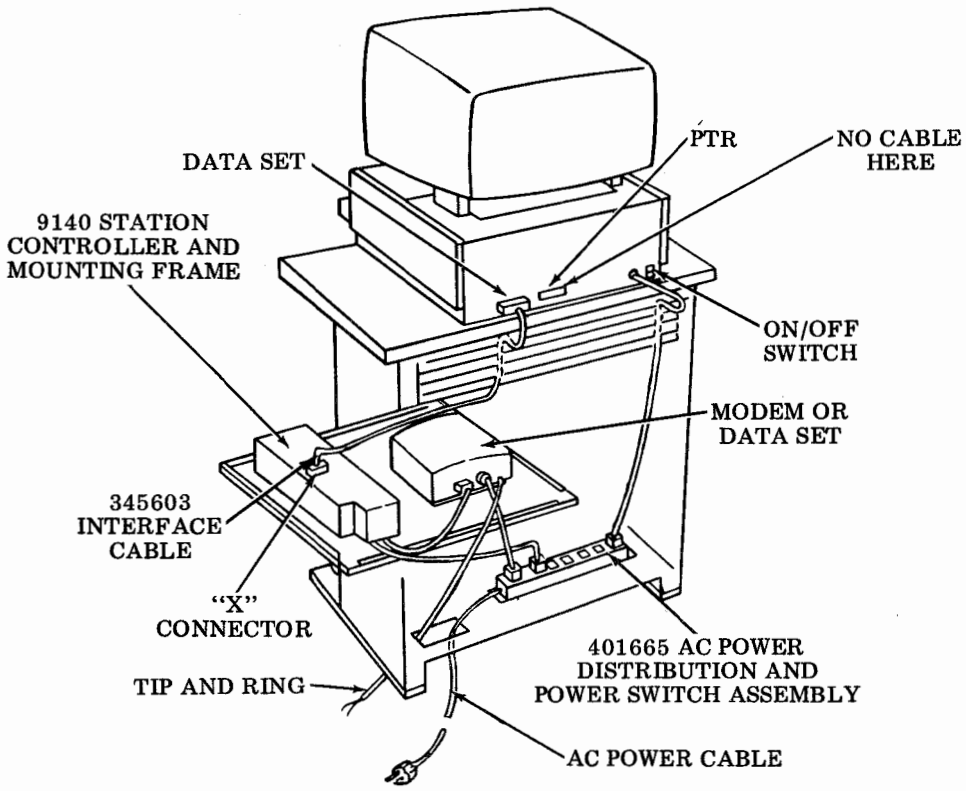

Model 40 KDP Station With 9140 Station Controller
(Printer Adjacent -- Friction or Tractor Feed)

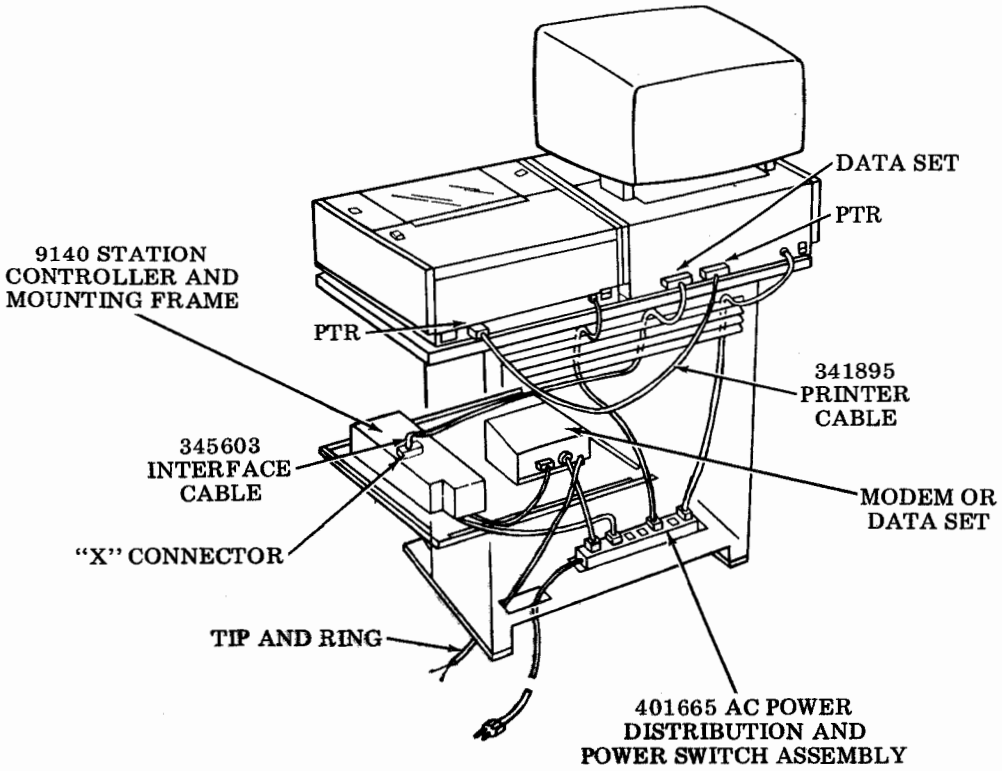

F. CABLE INTERCONNECTION (Cont)

Model 40 KDP Station With 9140 Station Controller (Cont)
(Printer Under Monitor -- Friction Feed Only)

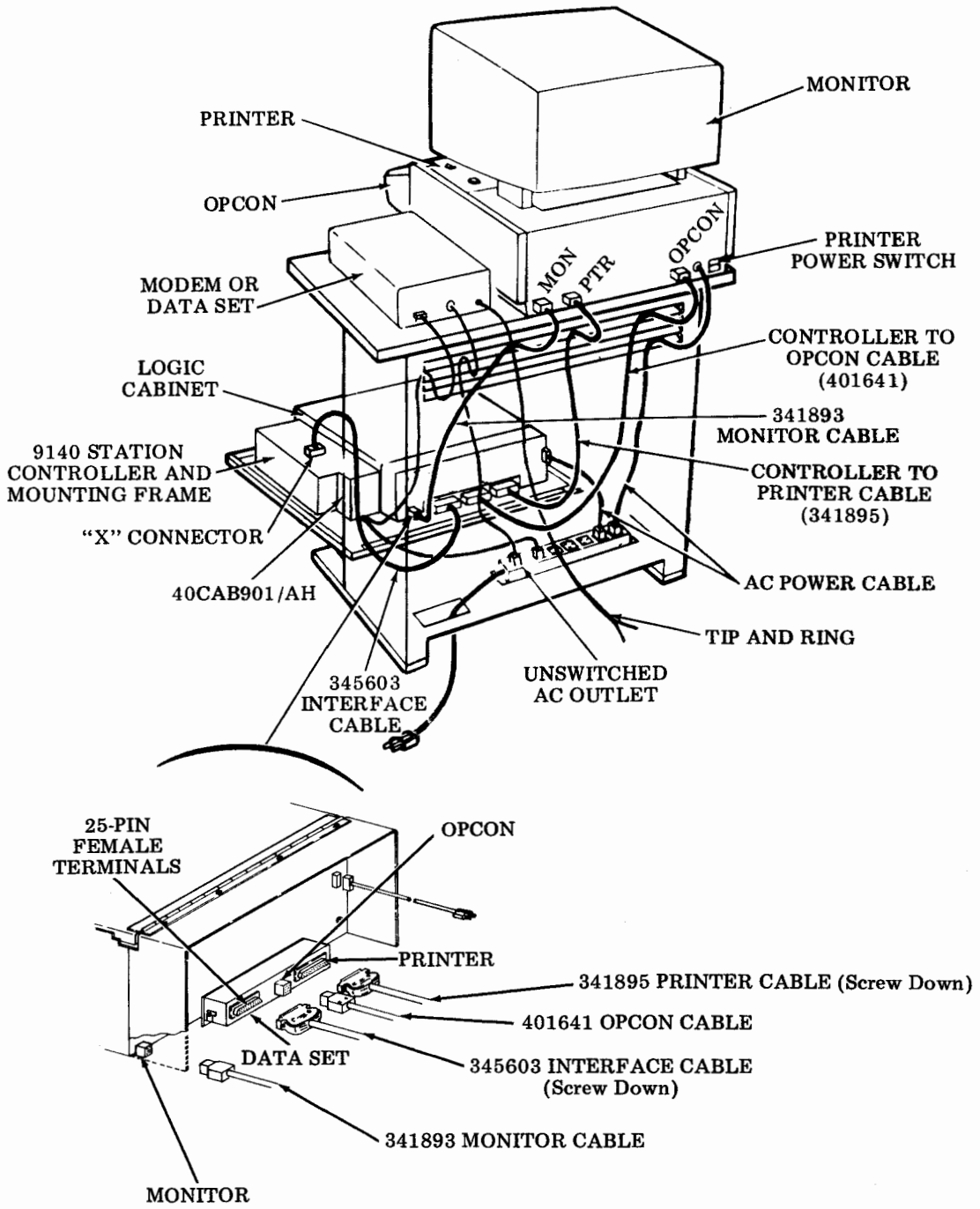

Model 40 ROP Station With 9140 Station Controller
(Friction or Tractor Feed Printer)

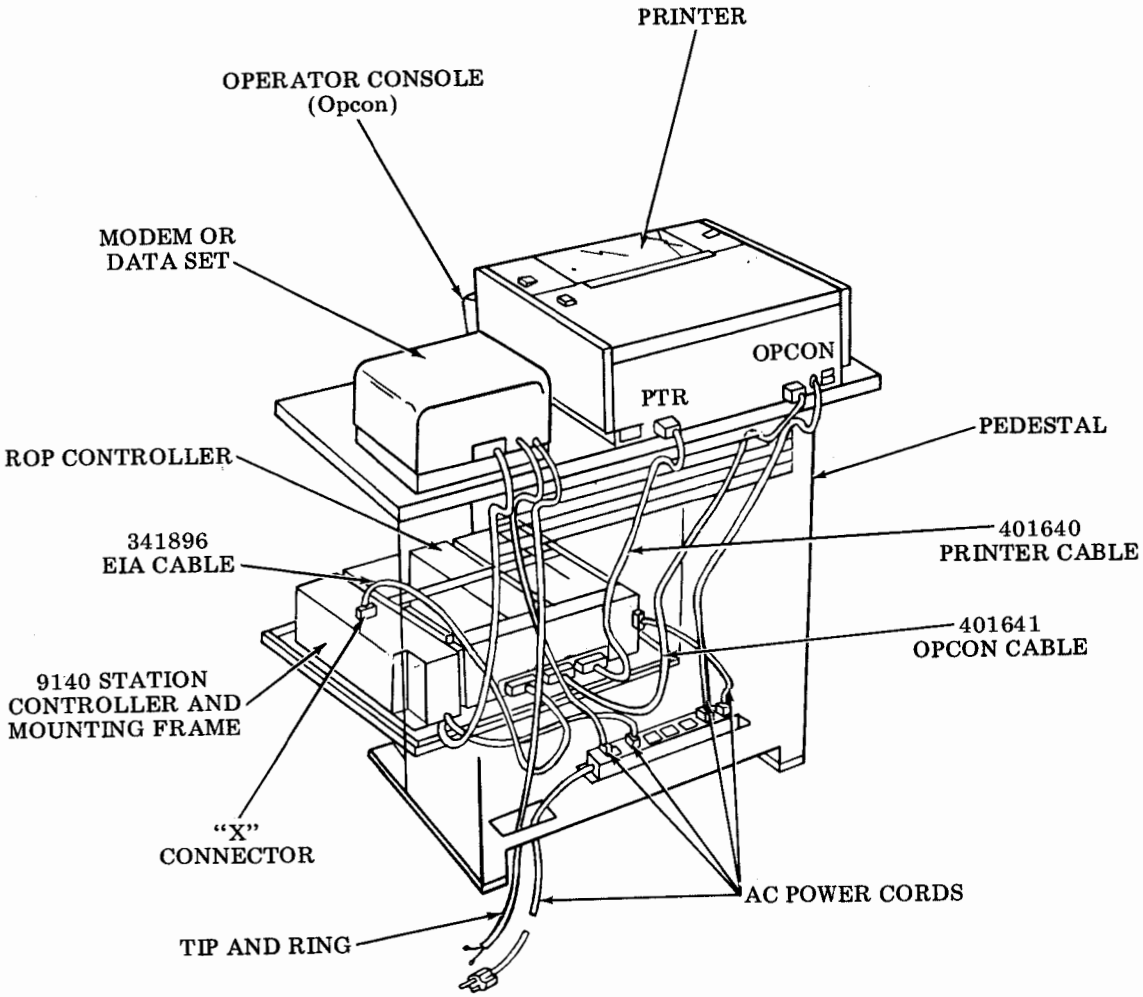

F. CABLE INTERCONNECTION (Cont)

Model 40 KD-ROP Station With 9140 Station Controller
(Friction or Tractor Feed Printer)

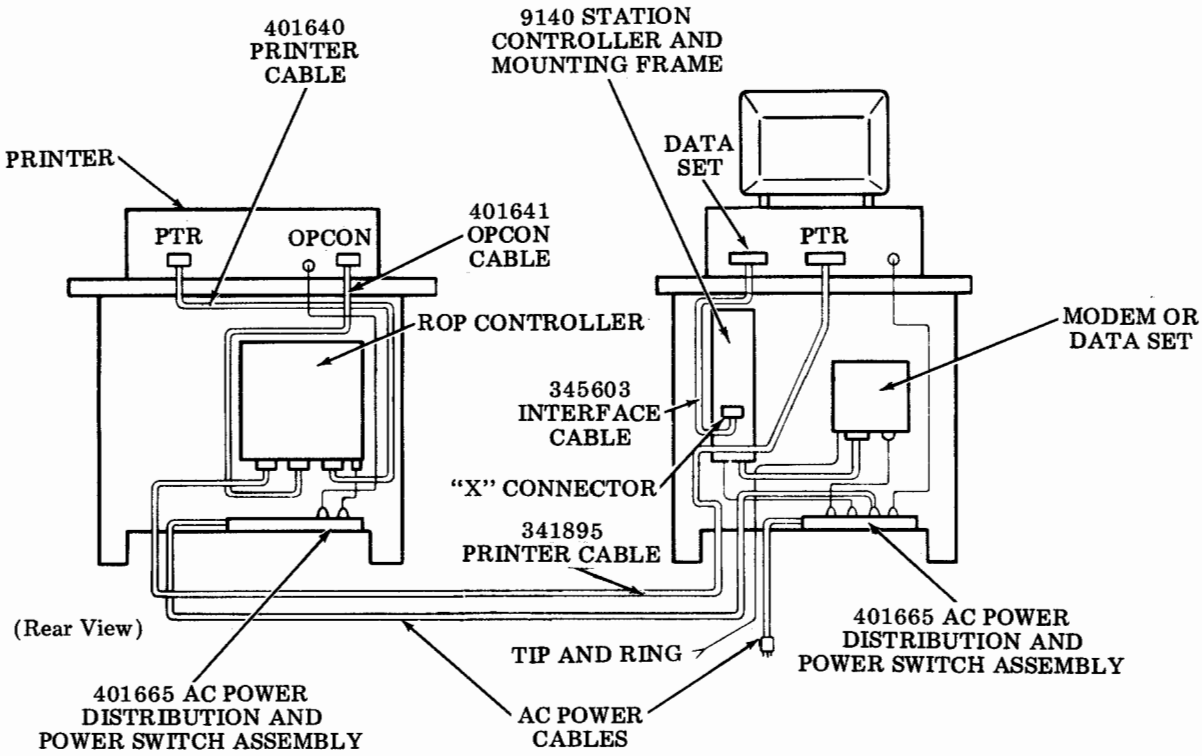

Model 40 KD & ROP Station With 9140 Station Controller
(Friction or Tractor Feed Printer)

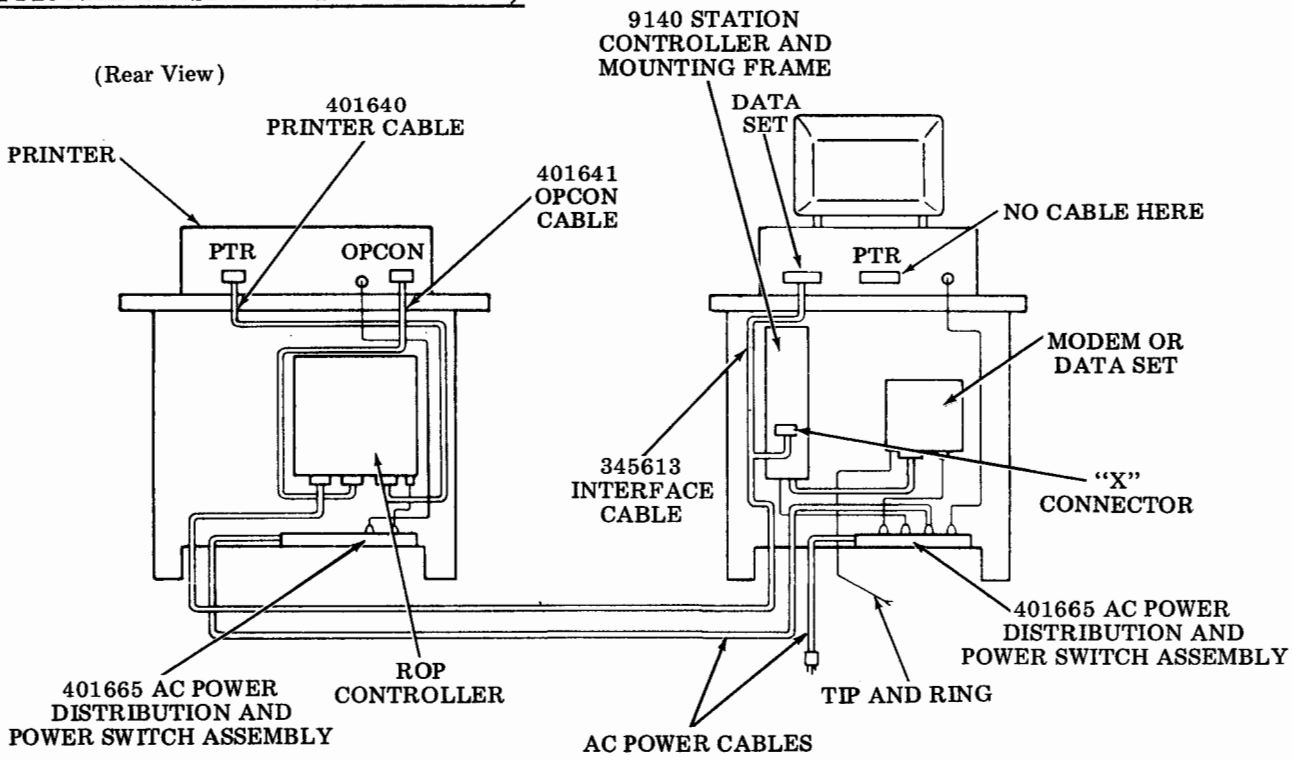

Model 40 KDP and ROP Station With 9140 Station Controller
(Adjacent Printer is Friction or Tractor Feed;
ROP Printer is Friction or Tractor Feed.)

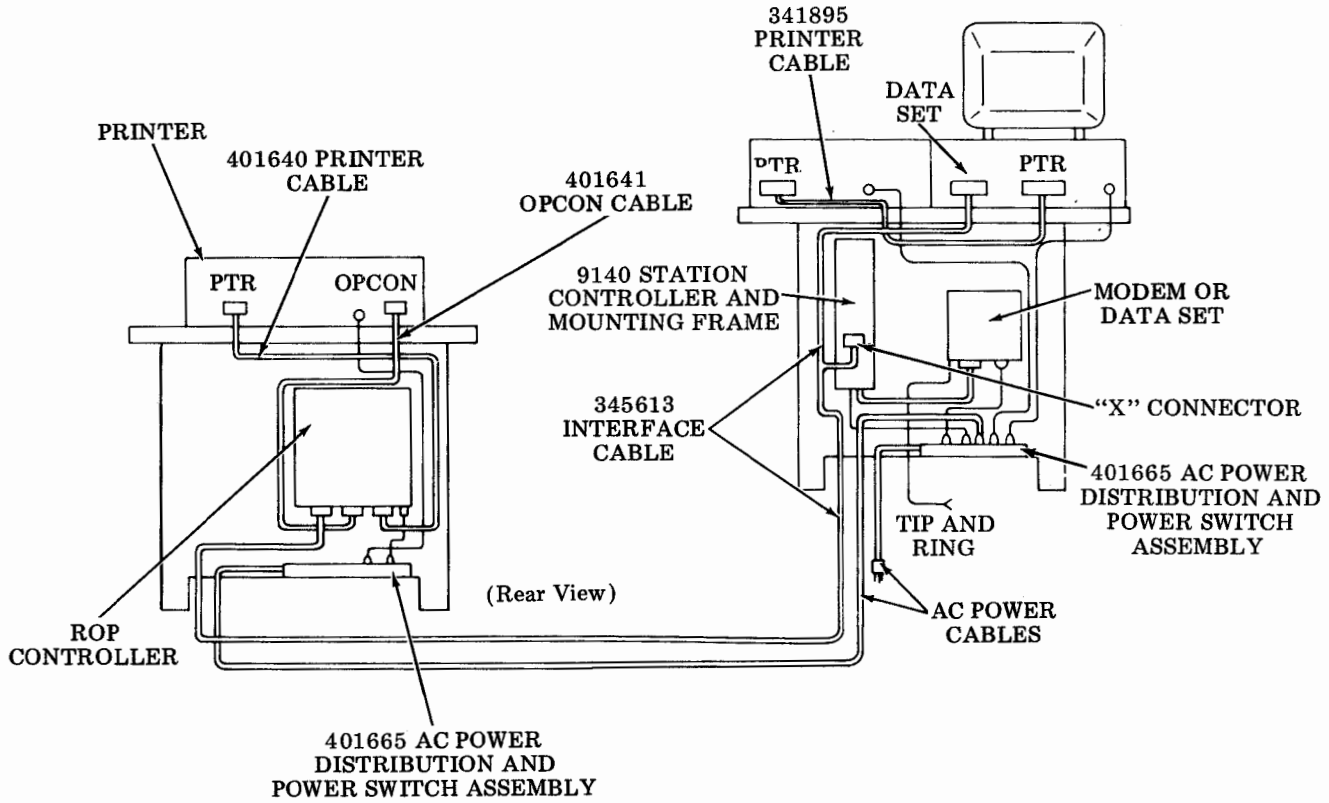

Model 40 KDP and ROP Station With 9140 Station Controller
(Printer Under Monitor is Friction Feed Only;
ROP Printer is Friction or Tractor Feed.)

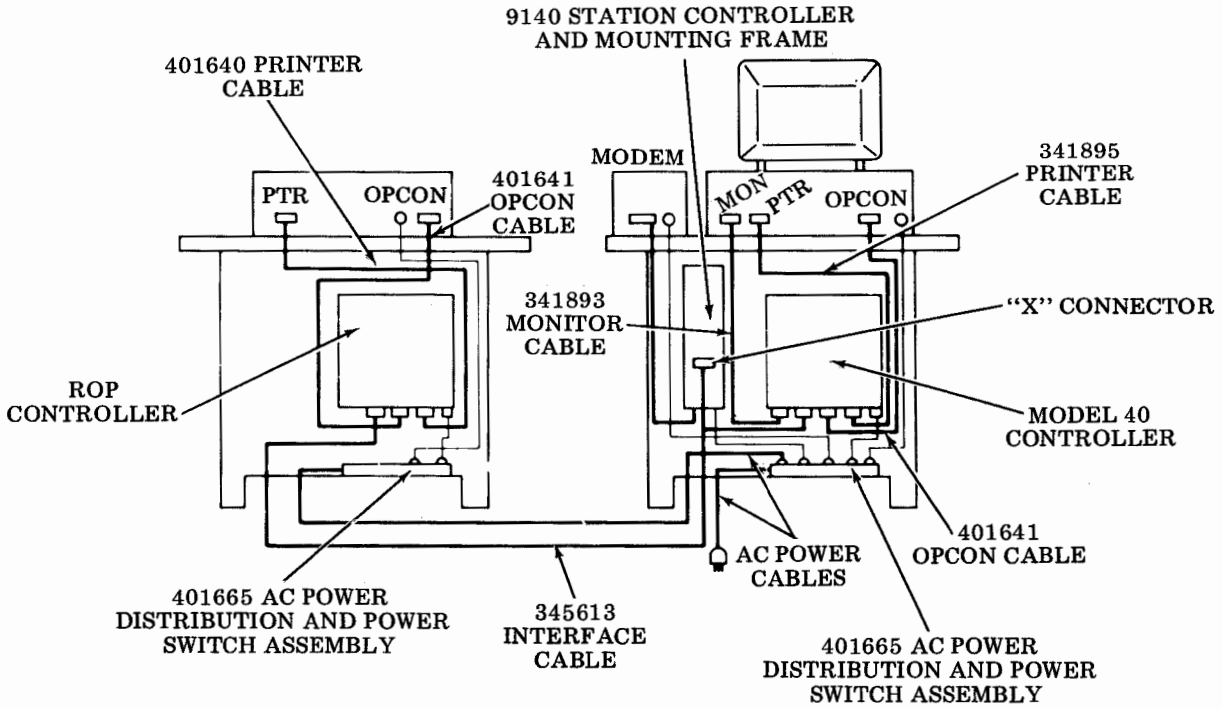

F. CABLE INTERCONNECTION (Cont)

Model 40 KD-ROP Equipped With Individual Receiver Selection Modification Kit

(Rear View)

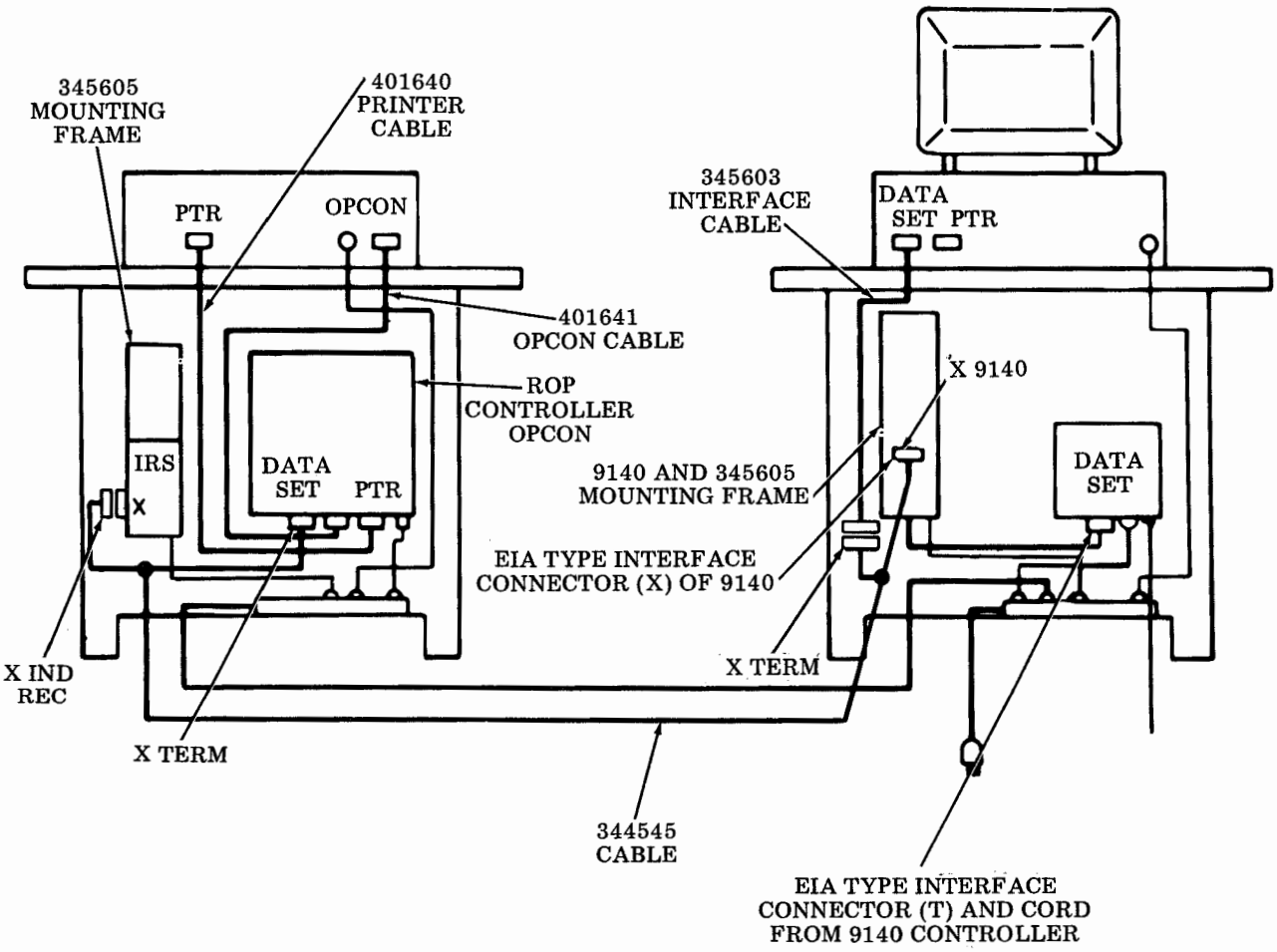

Model 40 Free Standing Keyboard and Display Sets
With or Without Printers For 40/1, 40/2, or 40/3 Terminals

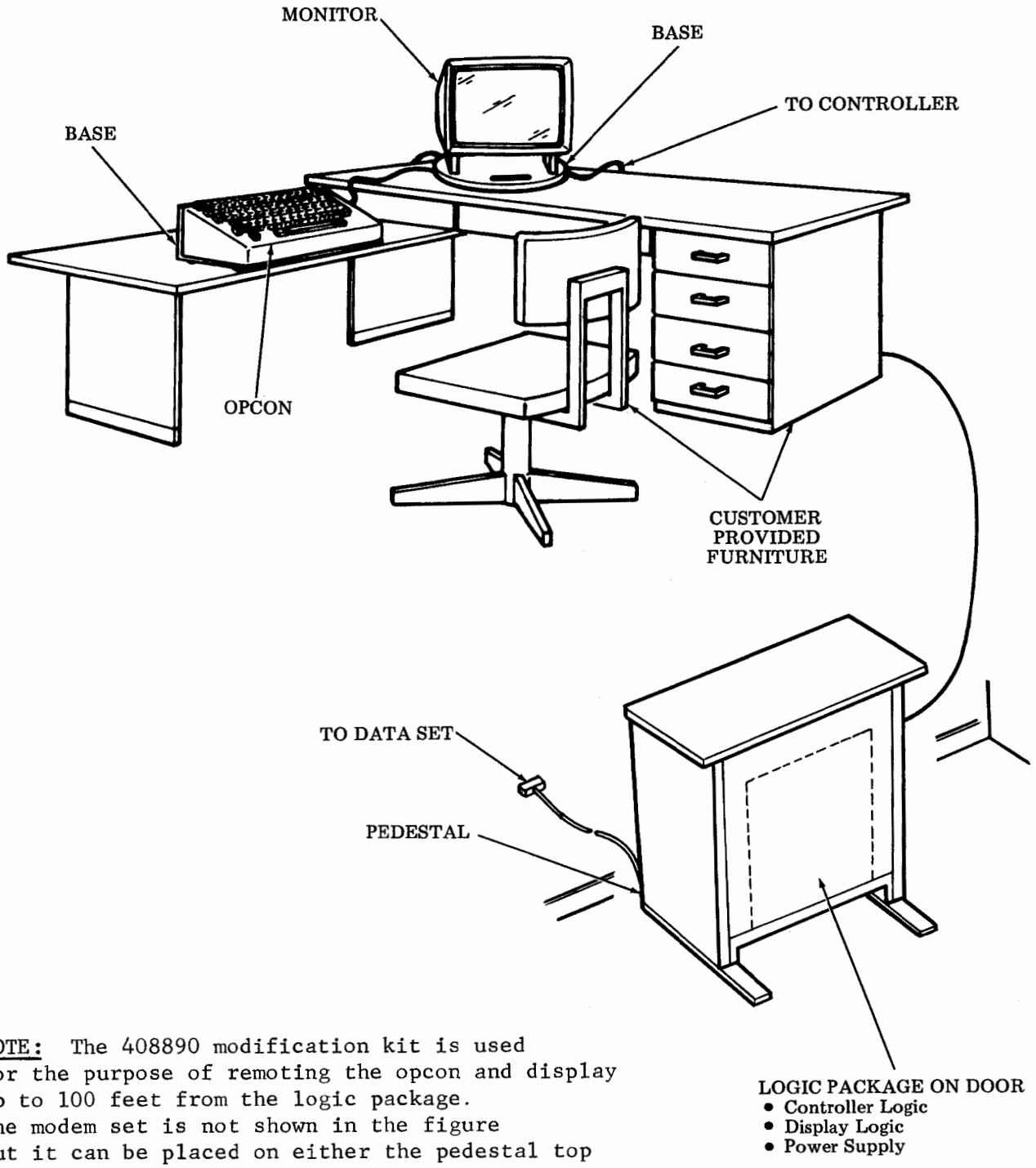

NOTE: The 408890 modification kit is used for the purpose of remoting the opcon and display up to 100 feet from the logic package. The modem set is not shown in the figure but it can be placed on either the pedestal top or the customer provided furniture. Refer to specification 50907S for further information on modification kit.

F. CABLE INTERCONNECTION (Cont)

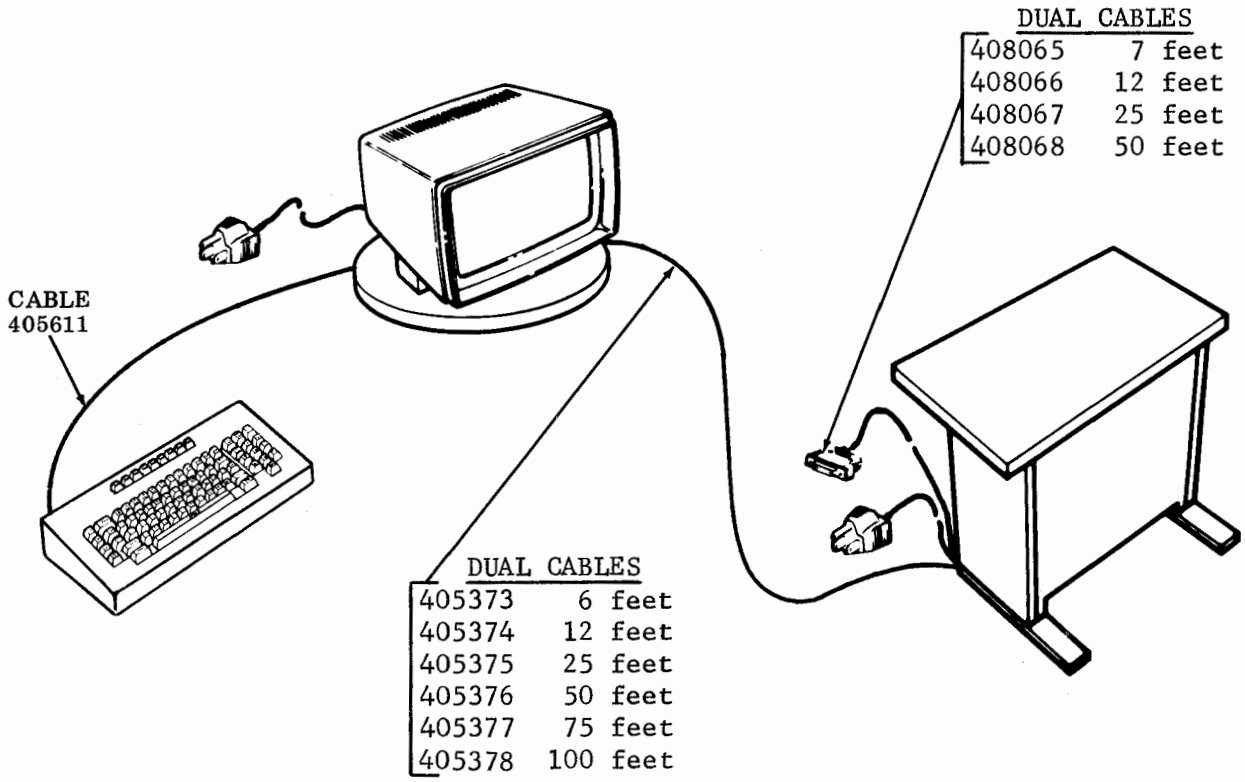

KD Sets

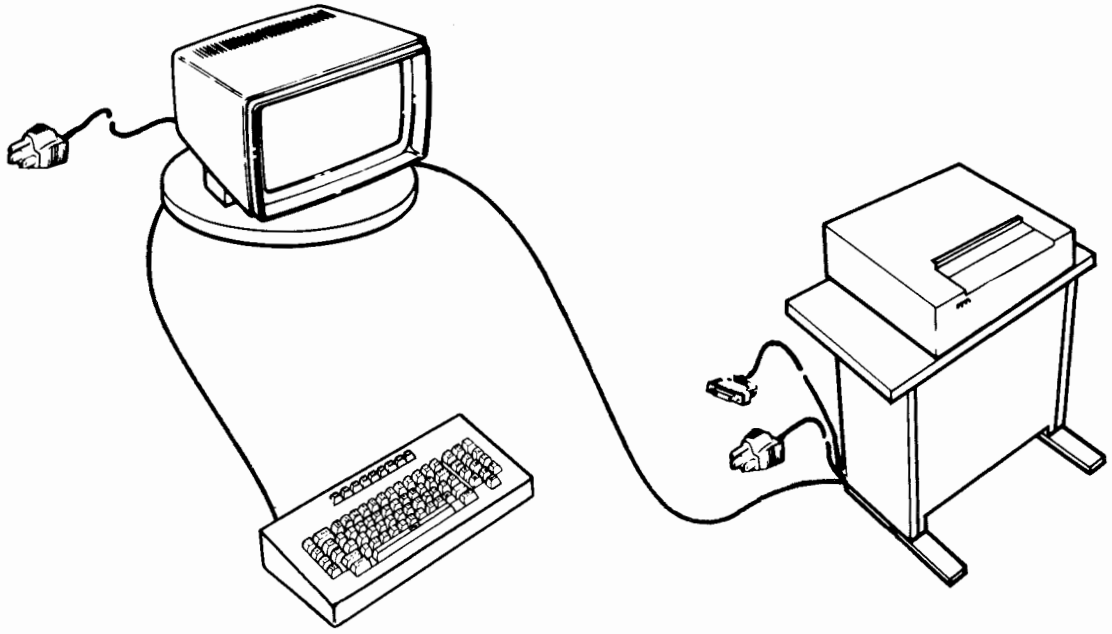

KD and 80-Column Form Feed Printer

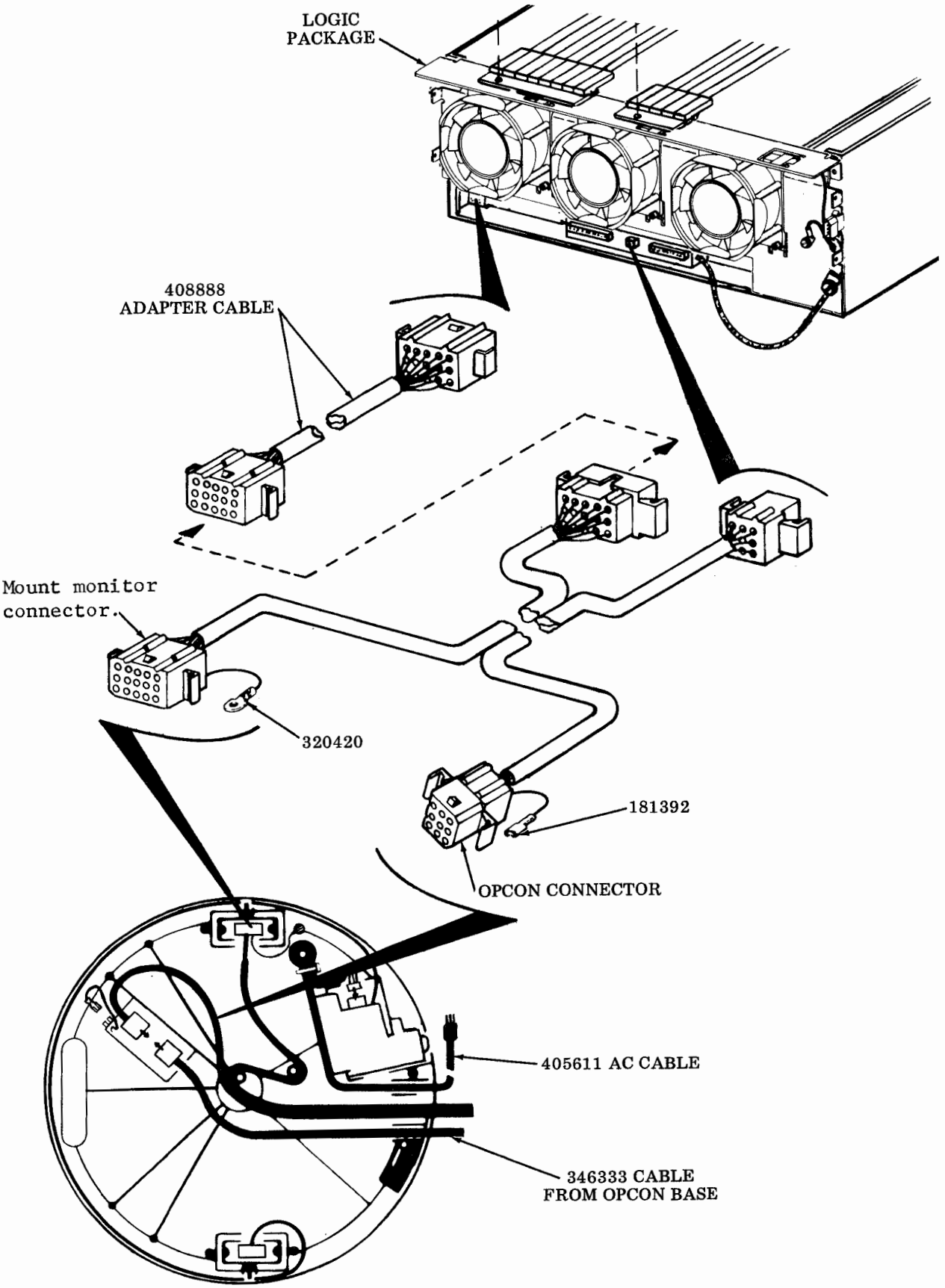
LOGIC
PACKAGE
408888
ADAPTER CABLE
Mount monitor
connector.
320420
181392
OPCON CONNECTOR
405611 AC CABLE
346333 CABLE
FROM OPCON BASE

F. CABLE INTERCONNECTION (Cont)

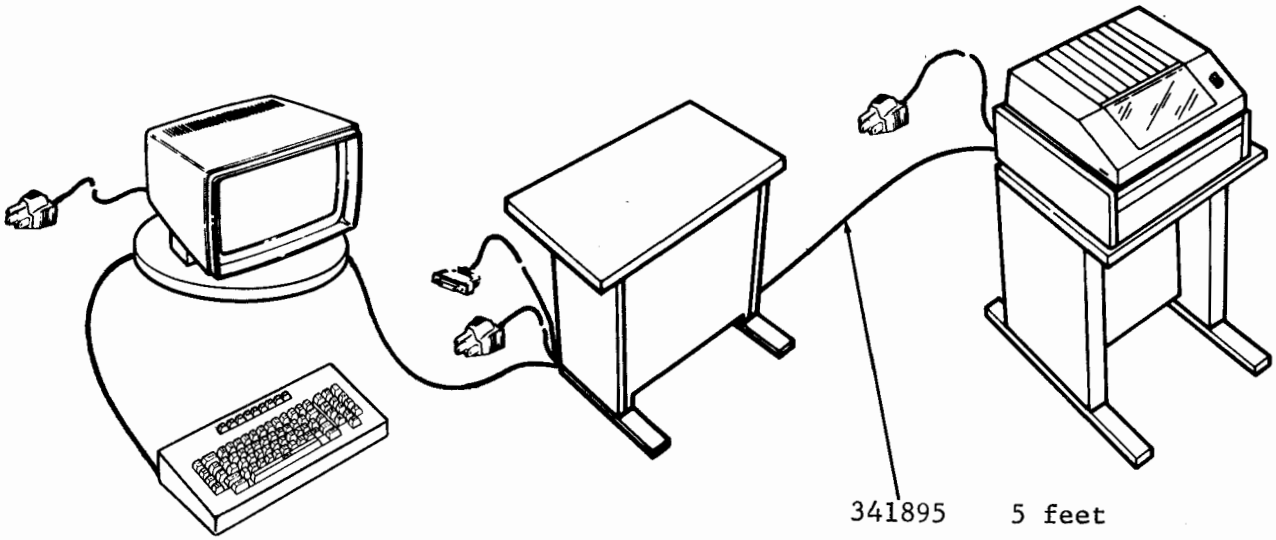

341895 5 feet

Available extension cables:
(5 feet plus length)

405306	6 feet
405307	12 feet
405308	25 feet
405309	50 feet

KD and 80-Column Tractor Feed Printer

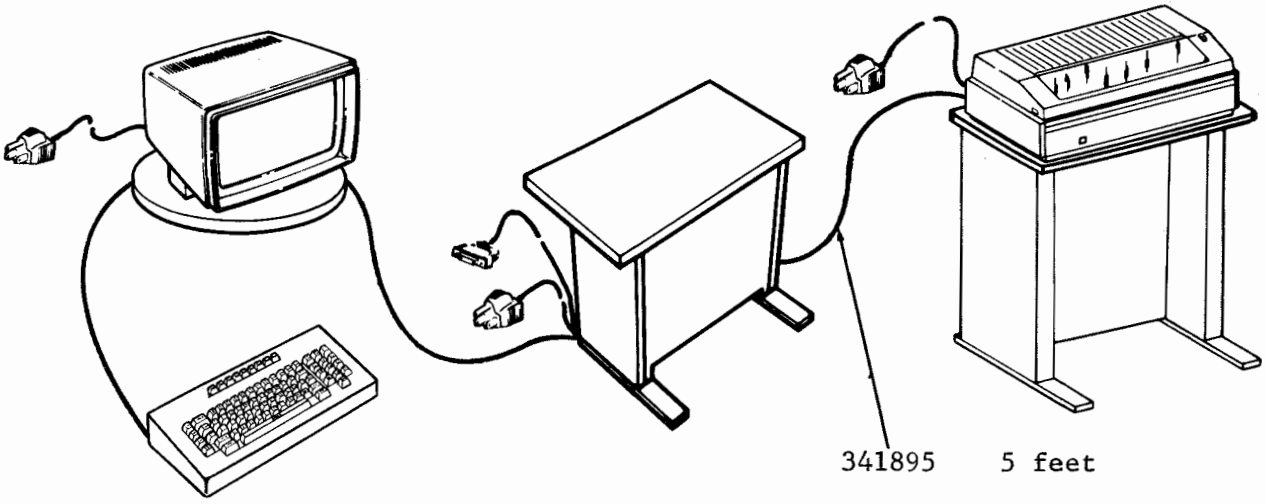

341895 5 feet

Available extension cables:
(5 feet plus length)

405306	6 feet
405307	12 feet
405308	25 feet
405309	50 feet

KD and 132-Column Tractor Feed Printer

Maxi-Cluster (SCC/DCC) Arrangements

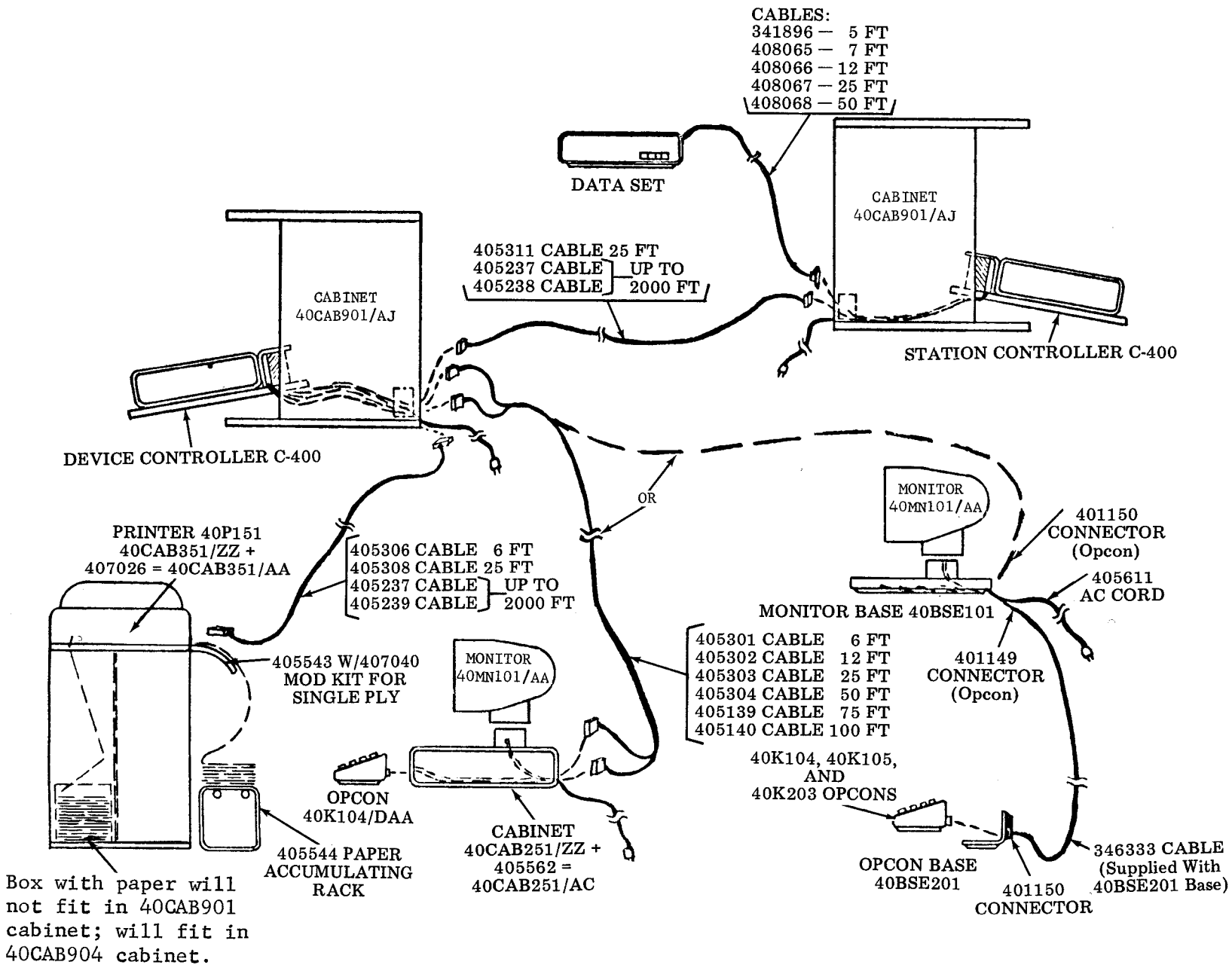

F. CABLE INTERCONNECTION (Cont)

Mini-Cluster (MCC) Arrangements

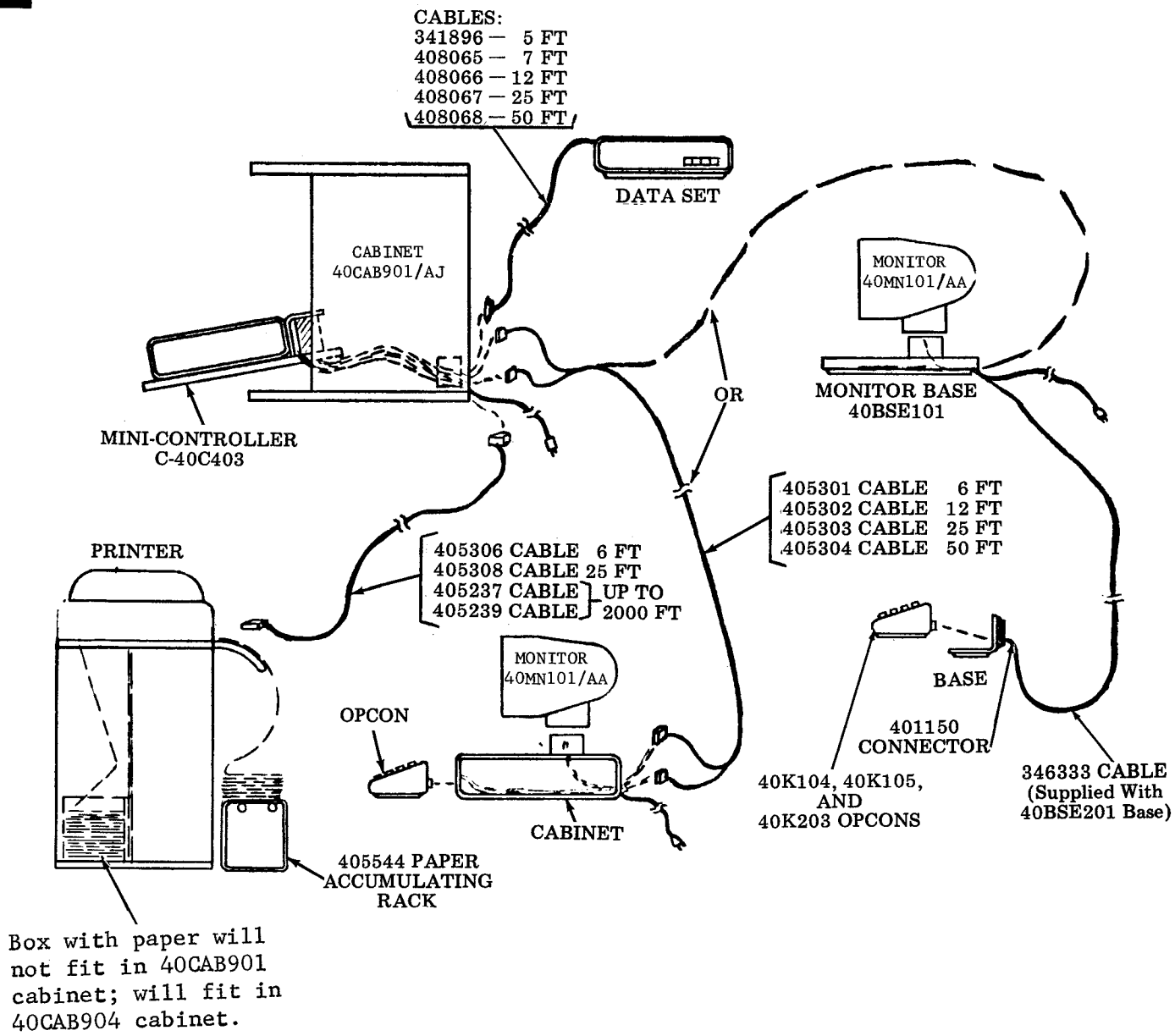

Single Display Arrangements (40/4)

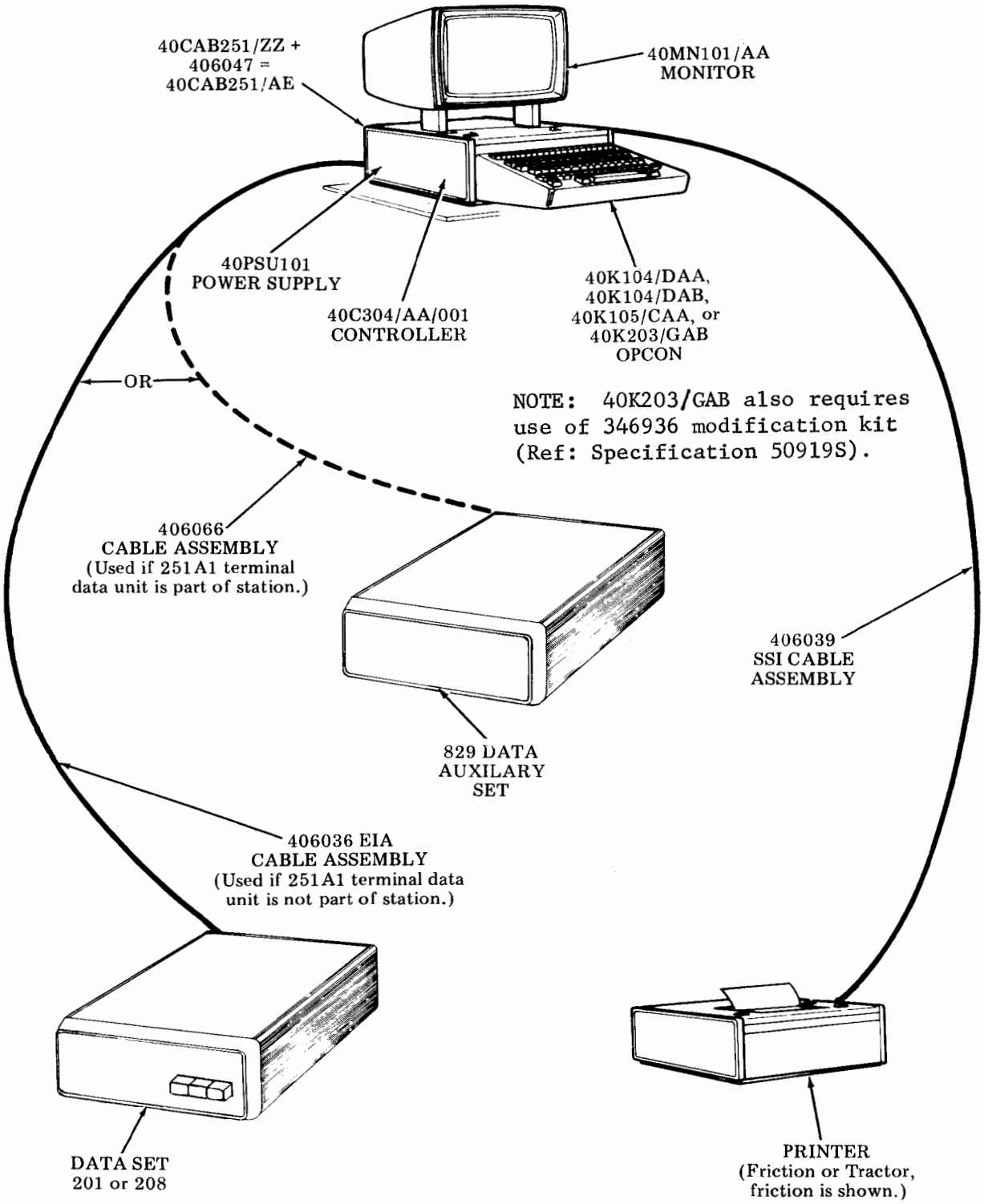

F. CABLE INTERCONNECTION (Cont)

406039 SSI Cable Assembly

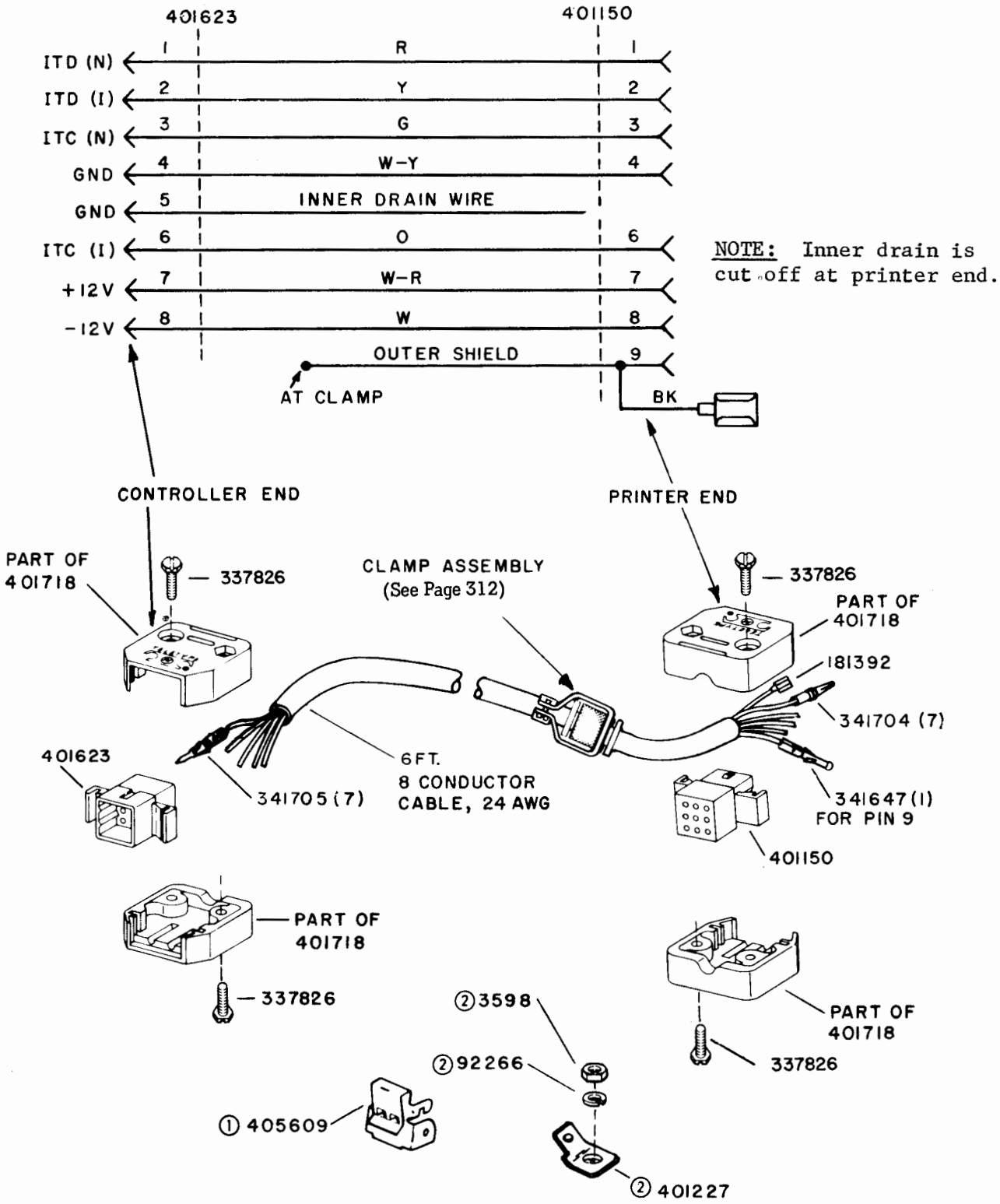

①Supplied with cable; used on tractor feed printer cabinet.
②Supplied with cable; used on friction feed printer cabinet.

Cable Connection

406036 EIA Cable Assembly

APPLICATION: (C304 CONTROLLER-DATA SET)

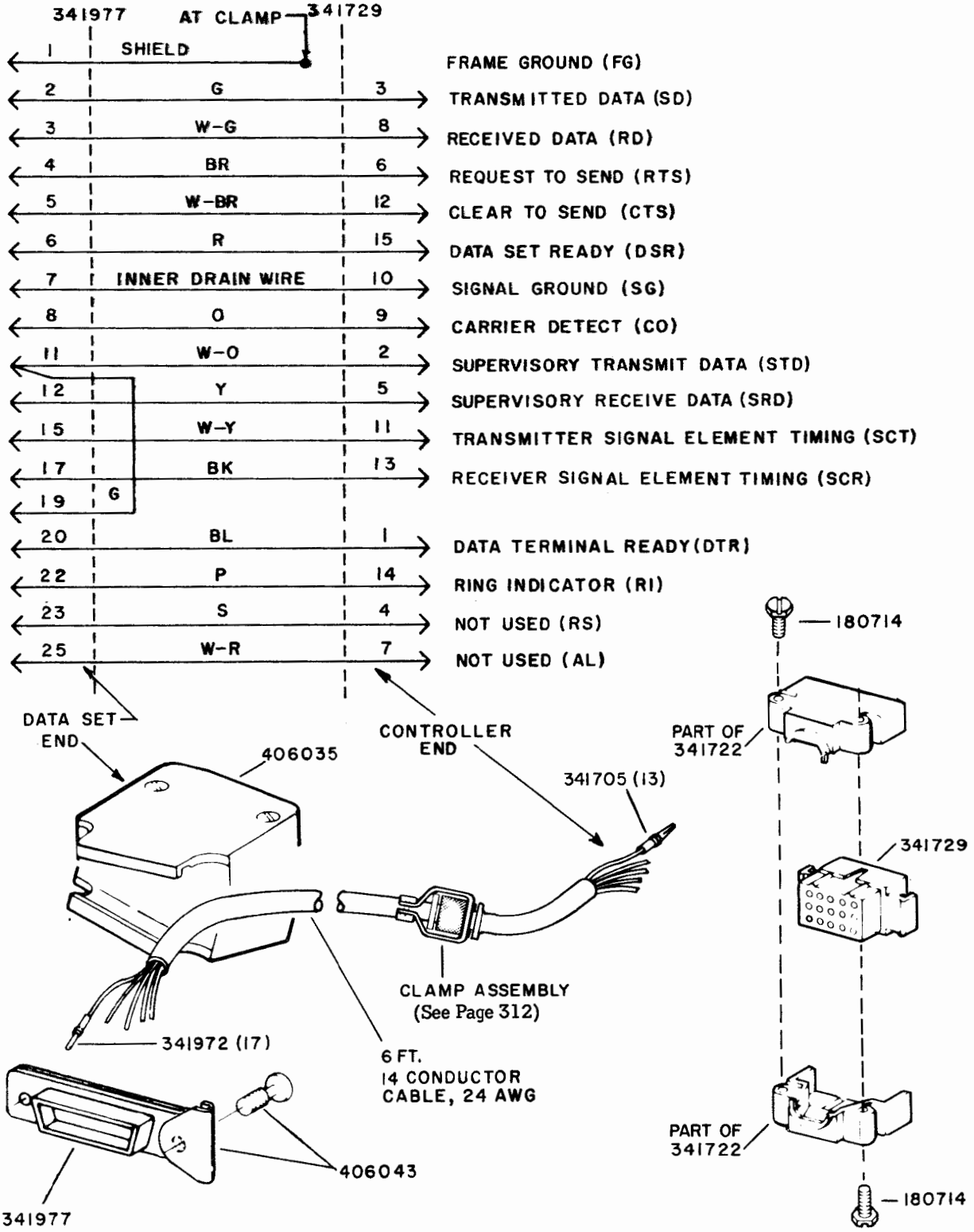

F. CABLE INTERCONNECTION (Cont)

406066 Private Line Interface Unit Cable Assembly

APPLICATION: (C 304 CONTROLLER — PLIU)

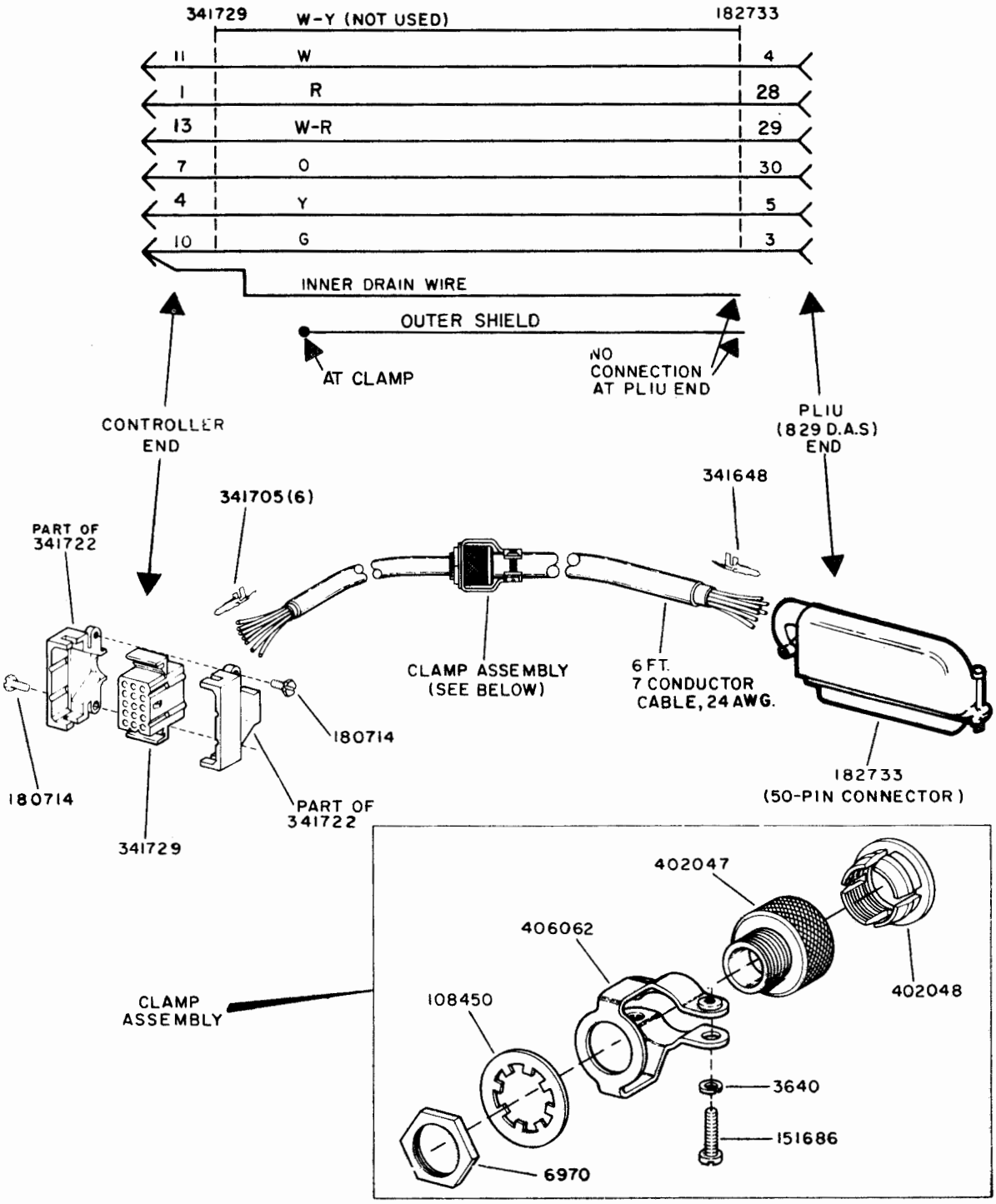

PART 11 - ASSOCIATED EQUIPMENT

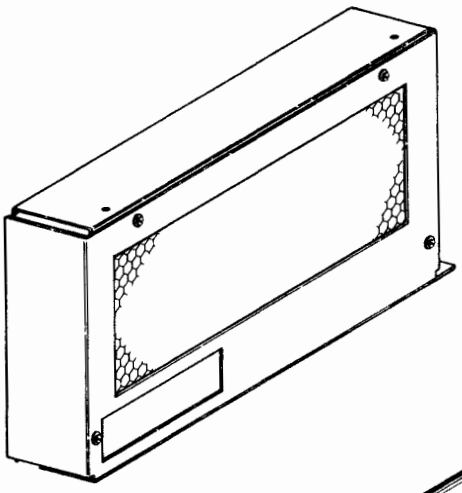

40AB101/AA,
40AB101/AC
Answer-Back Units

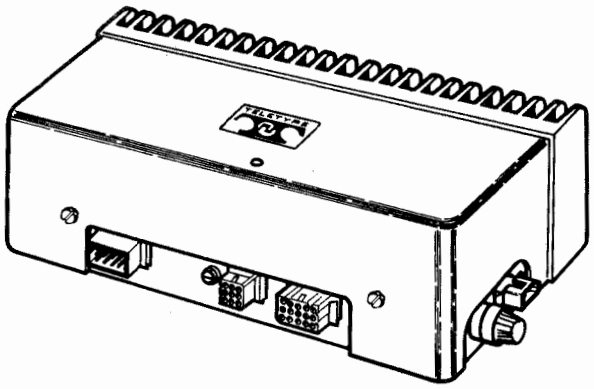

40KD101
Keyboard-Display
Amplifier

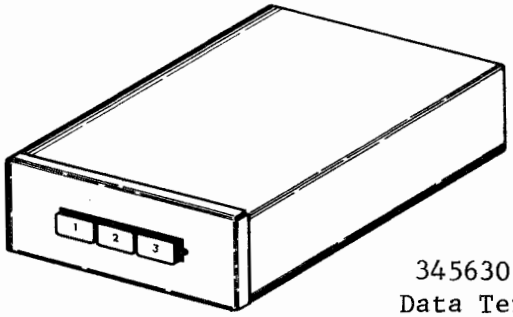

345630 EIA
Data Terminal
Switch Assembly

INDEX PAGE

A. GENERAL
1. DESCRIPTION 2
2. TOOLS, TEST EQUIPMENT AND DOCUMENTS 3

B. SHOP PROCEDURES
1. GENERAL 5
2. CLEANING AND REFINISHING. 6
3. INSPECTION. 7
4. MARKING AND PACKING 14

C. ANSWER-BACK UNITS
1. OPTIONS 19
2. CONVERSIONS 29
3. TESTING 31
4. TROUBLESHOOTING 36
5. DISASSEMBLY/REASSEMBLY AND PARTS. 41

D. KEYBOARD-DISPLAY AMPLIFIER
1. TESTING 46
2. TROUBLESHOOTING 48
3. DISASSEMBLY/REASSEMBLY AND PARTS. 55

E. EIA DATA TERMINAL SWITCH ASSEMBLY
1. TESTING 62
2. TROUBLESHOOTING 64
3. DISASSEMBLY/REASSEMBLY AND PARTS 68

PART 11 -- ASSOCIATED EQUIPMENT
A. GENERAL

1. DESCRIPTION

Part 11 provides shop repair procedures for the following equipment used in conjunction with Model 40 sets:

MODEL 40 ANSWER-BACK UNITS 40AB101/AA, 40AB101/AC, AND 403404 CABLE

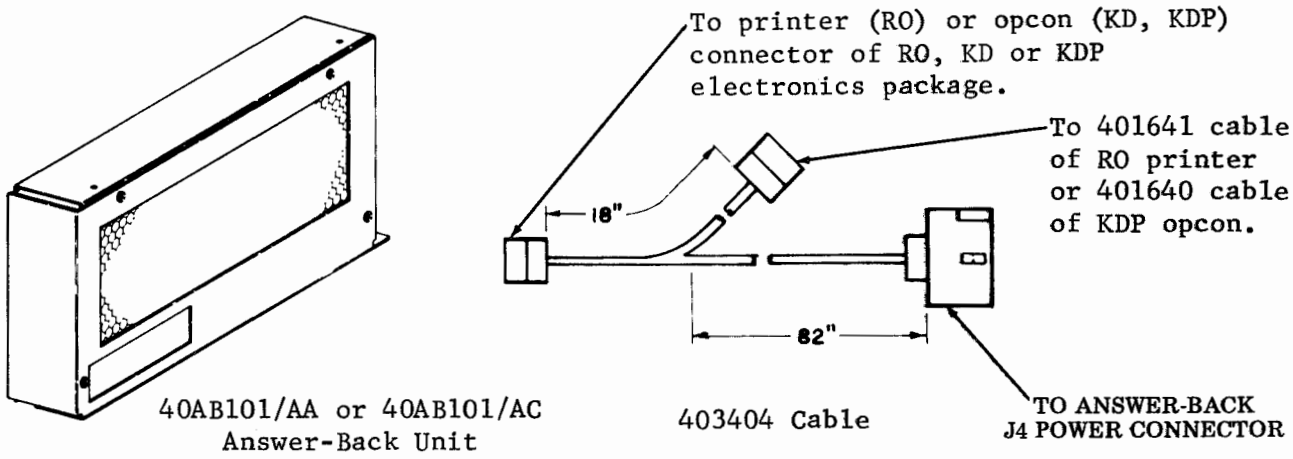

Either answer-back unit may be programmed to generate an answer-back sequence of from one to twenty characters by means of a programmable diode matrix circuit board. Other options oriented toward the procedures and protocols used in Models 40/1, 40/2 and 40/3 systems are available and selectable by means of switches and/or wire straps. Power for the answer-back units is derived from the associated Model 40 terminal.

The 40AB101/AA answer-back unit (early design) consists of three circuit cards, a 410722 answer-back card, a 410723 clock card and a 410724 diode matrix card, all assembled into a protective housing. This assembly is compatible with Model 40 asynchronous terminals utilizing Bell System Data Sets 202 series (or equivalent) operating at 1050 or 1200 baud.

The 40AB101/AC answer-back unit (late design -- replaces 40AB101/AA) consists of two circuit cards, a 410732 answer-back with clock card and a 410724 diode matrix card, all assembled into a protective housing. This assembly is compatible with Model 40 asynchronous terminals utilizing Bell System (or equivalent) data sets operating at 75, 110, 150, 300, 1050, 1200, 1800, 2400, 4800 or 9600 baud.

A 341896 EIA cable is furnished with each answer-back unit for interfacing to a data set. A 403404 cable must be ordered separately when interfacing the answer-back unit to a Model 40 terminal.

Model 40 Keyboard-Display Amplifier 40KDA101

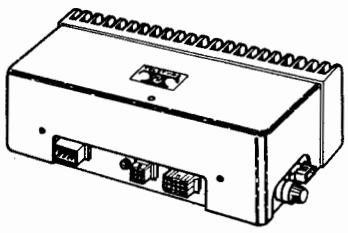

40KDA101 Keyboard-Display Amplifier

The keyboard-display amplifier (KDA) is used in a Model 40/4 system to provide remote operation of a display monitor or display monitor-opcon (KD) combination. A KD cabinet mounted KDA permits the KD to be separated up to 500 feet from an associated 40C400 type controller. An additional 100 feet of separation is possible when the KDA is mounted free-standing this distance from the KD.

The KDA is a solid-state, four-channel device that amplifies low level video, half-intensity, horizontal drive and vertical synchronous signals sufficiently to overcome cable losses incurred by remoting a KD. SSI signals between the controller and remote opcon do not require amplification and are routed internally from the input P1 connector to the output P3 connector of the KDA.

An integral regulated dc power supply furnishes +12 V, -12 V and GND to power the remote opcon and +5 V and GND for the remote display monitor. Primary input power requirements for the KDA are 103 to 127 V ac 50/60 Hz at approximately 0.4 amperes.

Model 40 EIA 345630 Switch Assembly

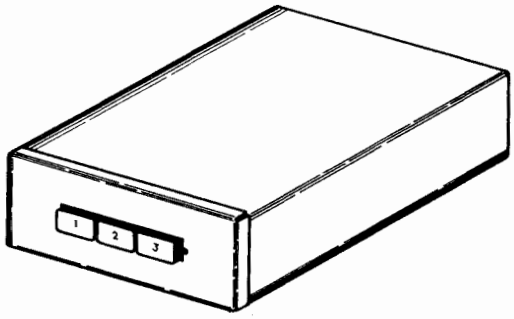

EIA 345630 Switch Assembly

The Model 40 EIA (Electronic Industries Association) 345630 switch assembly provides a means for interconnecting up to five Model 40 data terminals (EIA type) into three operating mode combinations. Each mode is established by operating one of the three pushbuttons. Signal and control interface leads are connected to the required terminations through banks of slide transfer switches positioned by the pushbuttons.

The switch assembly is designed to fit under and connect to a Bell System Data Set 202S (or equivalent), but may be mounted in any other convenient location. A seven-foot 341896 EIA cable is supplied to connect the switch assembly to the data set. Separately ordered cable assemblies and their application are fully detailed in Specification 50808S.

2. TOOLS, TEST EQUIPMENT AND DOCUMENTS

Tools

The following tools are supplementary to common types such as pliers, screwdrivers, etc, and may be procured locally or, where part numbers are specified, ordered from Teletype Corporation.

NOTE: When ordering replaceable parts, unless otherwise specified, prefix each part number with the letters "TP" (ie, TP410055).

A. GENERAL (Cont)

2. TOOLS, TEST EQUIPMENT AND DOCUMENTS (Cont)

Part No.	Description
89954	Wrench, nut driver, 1/4 inch
89955	Wrench, nut driver, 5/16 inch
125752	Wrench, nut driver, 3/16 inch
341983	Tool, terminal removal/insertion
346932	Strap, static discharge
402840	Extractor, terminal
	Iron, soldering, Weller Model W-MCP-750 with MP2C tip, or equivalent
	Tool, desoldering, EDSYN Model MMS005 SOLDAPULLT ®, or equivalent
337449	Degreaser, Freon TF (6oz. aerosol can)
344963 (KB)	Lacquer, black brushing
	Thermal-Joint Compound
	Mineral Spirits
	Paint brush, nylon bristle, 1/2 inch wide
	Wiping Cloths

Test Equipment

The following equipment is required for testing and/or troubleshooting Model 40 40AB101/AA, AC answer-backs, 40KDA101 keyboard-display amplifier and EIA 345630 switch assembly. Order or fabricate as detailed under Notes 1 through 6.

Qty	Description	Note
1	Multimeter, TRIPLETT 630A, or equivalent	1
1	Oscilloscope, Tektronix Model 7904 equipped with	1
2	7A16A Single Trace Amplifier	
1	7B70 Time Base Unit	
	or an equivalent oscilloscope combination.	
2	Bell System 202-type (or equivalent) data set.	1,2
2	Model 40 KD Set	2,3
1	403404 Answer-Back Cable	3
1	CP10.0100011 Monitor and KDA Test Set	4
1	CP10.0100021 KDA Test Cable	4
1	"HERE IS" Test Cable	5
1	Programmed 410724 Diode Matrix Card	6

NOTE 1: Order locally.

NOTE 2: Only one each data set and Model 40 KD set required, if answer-back units are tested "on-line".

NOTE 3: Order from Teletype Corporation
5555 Touhy Avenue,
Skokie, Illinois 60077

NOTE 4: Order from Teletype Corporation
Custom Product Division
5555 Touhy Avenue
Skokie, Illinois 60077
(312) 982-2499

NOTE 5: The "HERE IS" cable is fabricated locally. Items a. and b. may be ordered from Teletype Corporation. Items c. and d. may be procured locally.

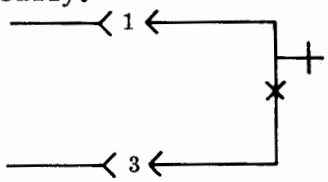

a. 341674 Receptacle (1)
b. 185677 Terminals (2)
c. 18 gauge Stranded Twisted Pair Wire (3 Feet)
d. Switchcraft E903 Pushbutton Switch (or equivalent) (1)

NOTE 6: Order the 410724 diode matrix card from Teletype Corporation. The card should be programmed for a typical 10 to 20 character answer-back message and retained as shop test equipment.

Documents

The documents listed below are required for installing, troubleshooting and repairing Model 40 40AB101/AA, AC answer-backs, 40KDA101 keyboard-display amplifier and EIA 345630 switch assembly. Documents may be ordered from Teletype Corporation.

345636	Assembly Information for 345630 EIA Switch Assembly
410575	Assembly Drawing for 410575 card of 40KDA101
410732	Assembly Drawing for 410732 card of 40AB101/AC
WDP0434	Wiring Diagram Package for 40AB101/AA
1287SD	Schematic Drawing for 345630 EIA Switch Assembly
4575CD	Circuit Description for 410575 card of 40KDA101
4575SD	Schematic Drawings for 410575 card of 40KDA101
4732CD	Circuit Description for 410732 card of 40AB101/AC
4732SD	Schematic Drawings for 410732 card of 40AB101/AC
9553WD	Wiring Information for 345630 EIA Switch Assembly
50808S	General Instructions, Description, Principles of Operation, Installation, Checkout, and Disassembly and Reassembly for the 345630 EIA Switch Assembly
50853S	Installation Instructions for 40KDA101
50865S	Installation Instructions for 40AB101/AA
50955S	Installation Instructions for 40AB101/AC

B. SHOP PROCEDURES

1. GENERAL

This section describes the cleaning, refinishing and inspection procedures to be followed prior to testing and troubleshooting either answer-back unit, the keyboard-display amplifier or the EIA switch. In many cases, careful inspection will save later troubleshooting by revealing broken or loose connections, damaged components, possible short circuits, etc. Inspection should immediately follow cleaning and refinishing with the equipment still in a disassembled state.

Refer to F. DISASSEMBLY/REASSEMBLY AND PARTS whenever detailed information on removing covers or components is required.

The packing materials and methods described in this section provide maximum protection against damage from rough handling in shipping. The listed materials are available from Teletype Corporation.

B. SHOP PROCEDURES (Cont)

2. CLEANING AND REFINISHING

Cleaning

Do not use tank or immersion types of cleaning processes (ie, ultrasonic cleaning or solvent tank) on the answer-back, KDA or EIA switch.

CAUTION: AVOID THE USE OF HARSH OR ABRASIVE CLEANING AGENTS OR SOLVENTS WHICH COULD SCRATCH OR DAMAGE THE EXTERIOR SURFACES OF THE EQUIPMENT COVERS.

Prior to cleaning, each unit should be disassembled by following the numbered steps detailed below.

CAUTION: TO AVOID POSSIBLE INTERNAL DAMAGE TO CIRCUITRY, WEAR A 346392 STATIC DISCHARGE STRAP CONNECTED TO GROUND TO ALLOW STATIC DISCHARGE BEFORE HANDLING CIRCUIT CARDS FOR REMOVAL OR REPLACEMENT. AVOID TOUCHING CIRCUIT LANDS AND CARD COMPONENTS AS MUCH AS POSSIBLE.

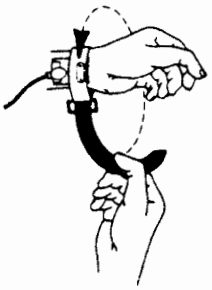

Attach static ground strap tightly to wrist.

Attach clip end of static discharge strap to frame ground.

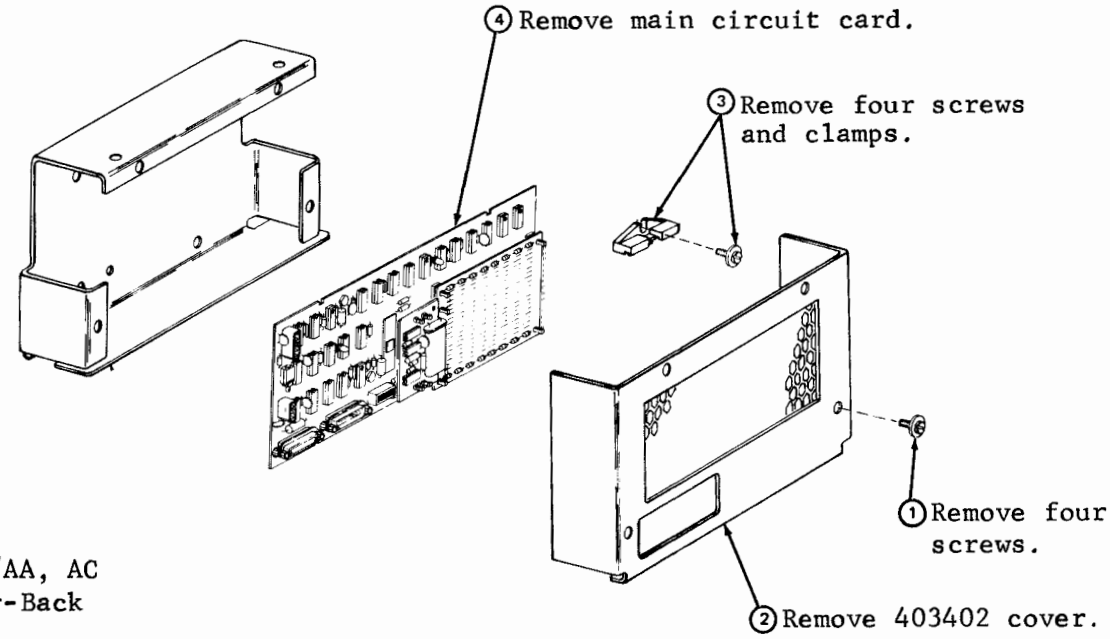

40AB101/AA, AC
Answer-Back

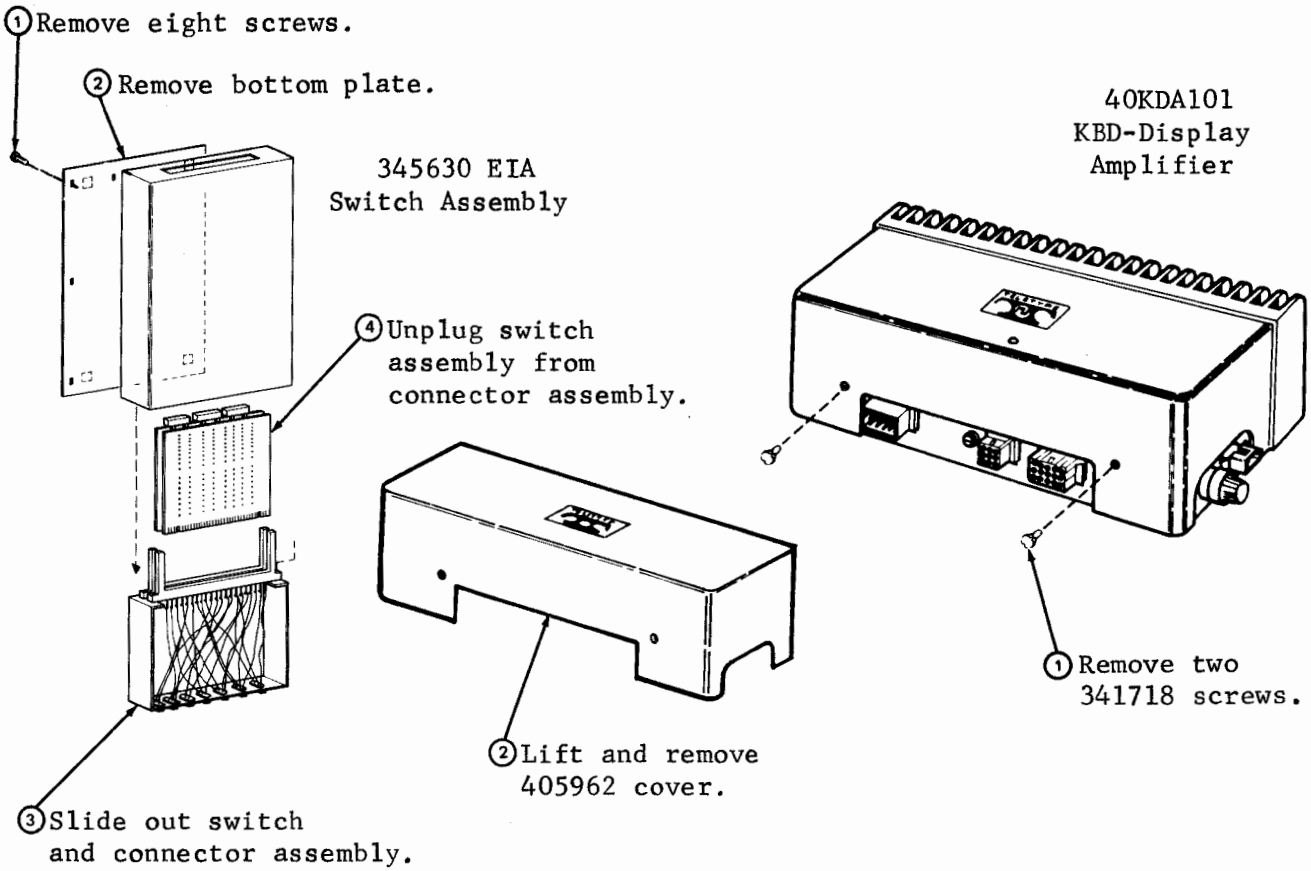

Clean unpainted surfaces of covers by wiping with a cloth moistened with mineral spirits. Wipe dry with a clean cloth.

Clean painted surfaces of covers by washing with a mild detergent. Rinse and dry thoroughly.

Circuit boards and other components may be lightly brushed with the 1/2 inch paint brush, followed by air blowing to remove dislodged dirt. Take care not to disturb wired connections, particularily on the EIA switch connector assembly.

CAUTION: THE AIR SUPPLY SHOULD NOT EXCEED 20 PSI. HIGHER AIR PRESSURE MAY DAMAGE DELICATE COMPONENTS.

Refinishing

Teletype Corporation 344963 (KB) black brushing lacquer may be used on covers requiring touch-up or refinishing. Areas requiring touch-up should have any scratches sanded smooth and the surface clean before applying lacquer.

3. INSPECTION

Procedure

Inspection should result in a unit having all visible defects corrected or repaired. This includes missing, broken or otherwise defective components of circuit cards and cables. Illegible markings should be renewed and code plates should be present and legible.

B. SHOP PROCEDURES (Cont)

3. INSPECTION, Procedure (Cont)

Units to be repaired for and shipped from stock for field optioning and installation should be restored to standard. Answer-back units should have all cut option straps and/or diodes replaced and EIA switch units should conform to 9553WD.

Units to be repaired and immediately assigned to shop assembled Model 40 terminals will be optioned to meet the user's requirements.

CAUTION: TO AVOID POSSIBLE INTERNAL DAMAGE TO CIRCUITRY, WEAR A 346392 STATIC DISCHARGE STRAP CONNECTED TO GROUND TO ALLOW STATIC DISCHARGE BEFORE HANDLING CIRCUIT CARDS FOR REMOVAL OR REPLACEMENT. AVOID TOUCHING CIRCUIT LANDS AND CARD COMPONENTS AS MUCH AS POSSIBLE.

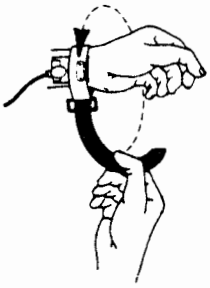

Attach static ground strap tightly to wrist.

Attach clip end of static discharge strap to frame ground.

Identification Plate

Check for presence of 336810 identification plate. Verify that code designation and serial numbers are present and correct. If ID plate is missing, stamp code and serial number, if known, on new ID plate. When serial number is unknown, assign one per local practice. Remove paper backing from ID plate. Moisten ID plate gummed back and appropriate cover area with trichlorethane solvent. When ID plate gummed backing is tacky, press and hold in place on the cover for 15 to 30 seconds.

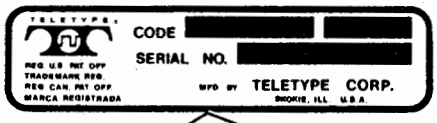

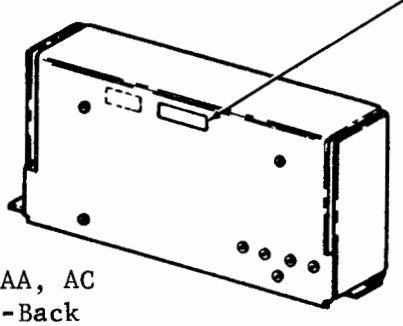

40AB101/AA, AC
Answer-Back

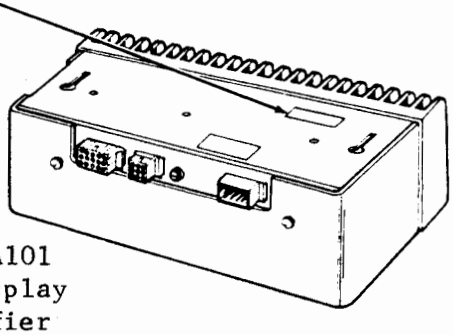

40KDA101
KBD-Display
Amplifier

NOTE: An ID plate is not required on the 345630 EIA switch assembly.

Answer-Back Circuit Cards and 341896 Cable Assembly

Unplug the 410724 diode matrix circuit card from the 410722 or 410732 answer-back circuit card. Unplug the 410723 clock circuit card from the 410722 answer-back circuit card.

- Inspect J1, J2, J3 and J4 connectors and the card-to-card pins and sockets for bent or broken terminals. Repair or replace, if required.

- Check the circuit board components on a general basis for overheated or otherwise damaged components. Cracks, swelling or discoloration on a component usually indicates a problem area. Replace any obviously damaged components.

- Replace any cut or missing diodes on the 410724 diode matrix circuit card. Replace with 197464 diodes or, preferable, 407336 diodes which are a later type having improved characteristics. Do NOT resolder diodes having one lead cut. The close proximity of the cut lead to the diode body may produce excessive heat transfer to the diode junction, resulting in immediate or early diode failure. Use the solder removal tool to clear the solder from the diode mounting holes. Insert a new diode, leads UNCUT and polarized correctly, and solder into place. Clip off surplus lead length which acted as a heat sink during the soldering operation to conduct heat away from the diode junction.

- Examine the JU1 strap on the 410723 clock circuit card. If one end is cut, or if missing, replace with a 336470 strap.

- Examine R22 resistor and the JU1 strap on the 410722 answer-back circuit card. If one end of either is cut, or if either is missing, replace R22 resistor with a 5.1K, 1/4 W 315985 resistor and/or JU1 with a 336470 strap.

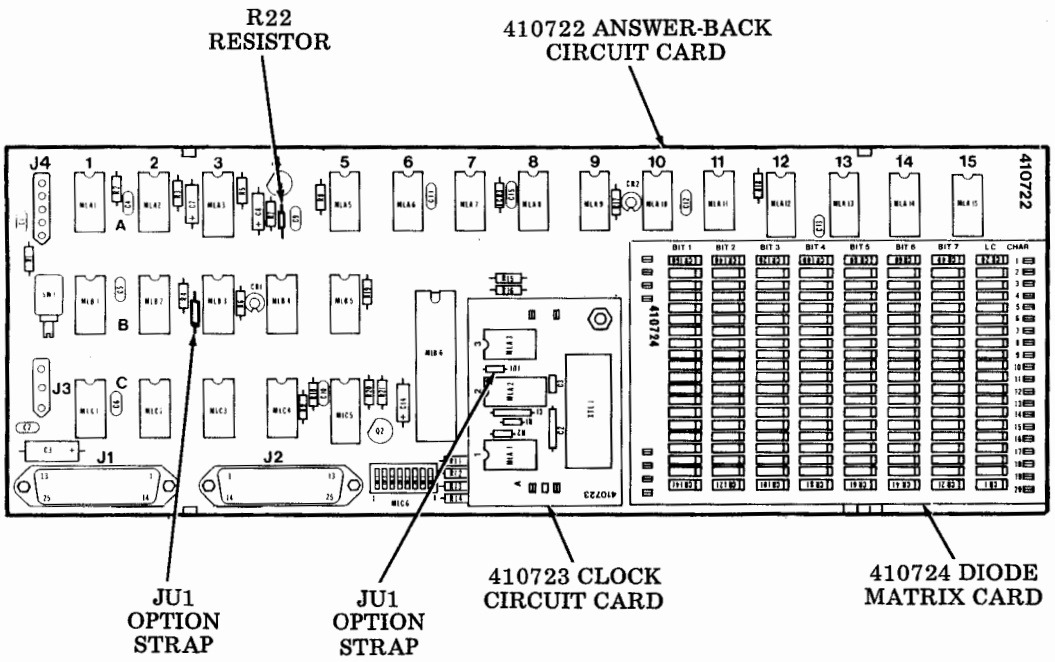

B. SHOP PROCEDURES (Cont)

3. INSPECTION, Answer-Back Circuit Cards and 341896 Cable Assembly (Cont)

- Examine R8 resistor on the 410732 answer-back circuit card. If one end is cut, or if the resistor is missing, replace R8 resistor with a 5.1K, 1/4 W 315985 resistor.

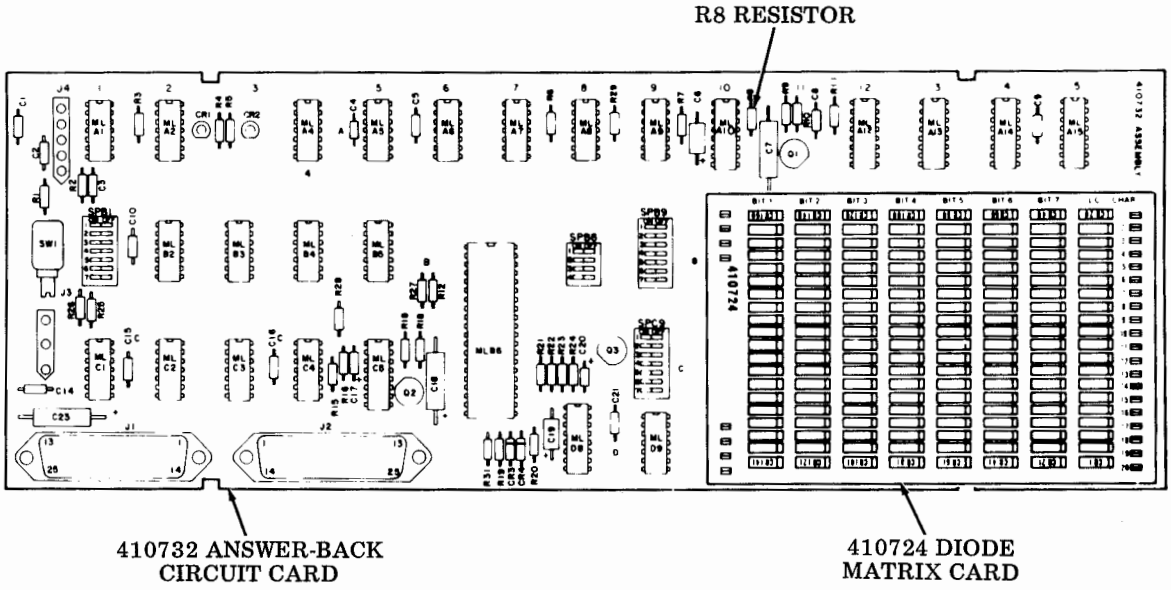

- Check both connectors of the 341896 cable assembly. The connectors and/or connector covers should be replaced if cracked or broken. Damage connector terminals should be removed and replaced after soldering with the 341983 terminal removal/insertion tool. Suspected cable crosses or opens may be found with the multimeter set to ohms and used as a continuity checker. Refer to F. DISASSEMBLY/REASSEMBLY AND PARTS of this part for a cable parts listing and schematic.

Reassemble circuit cards into the 403403 box. Leave the 403402 cover OFF until testing is completed.

Keyboard-Display Amplifier

Remove the 410575 circuit card as follows:

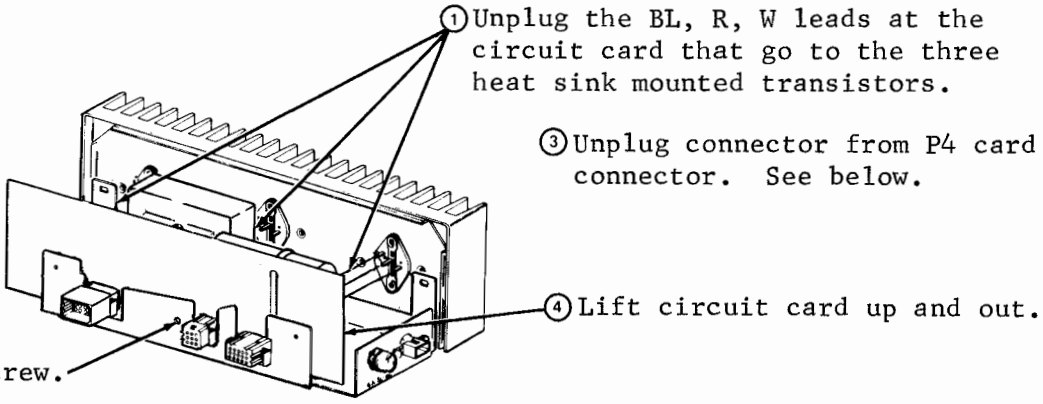

- Inspect P1, P2 and P3 connectors for cracked connector bodies and for bent or broken terminals. Repair or replace, if required.

- Check the circuit board components on a general basis for overheated or otherwise damaged components. Cracks, swelling or discoloration on a component usually indicates a problem area. Replace any obviously damaged components.

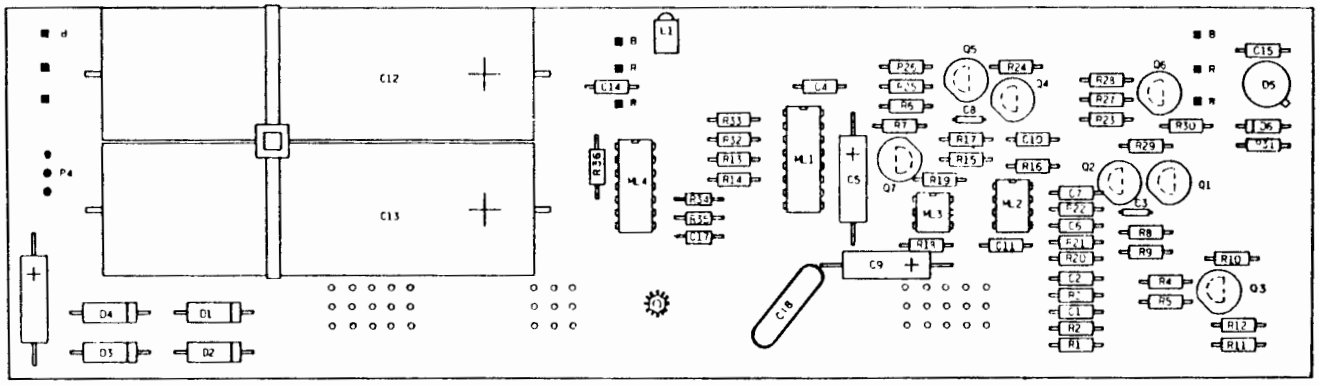

410575 Circuit Card

- Examine the three regulator transistor sockets for cracks or signs of overheating. Check the condition of the associated socket wiring. The wire insulation should be without nicks or abrasions and should be free of brittleness. The 341762 push-on terminals at the wire ends should not be bent or otherwise distorted and should grip the related circuit card terminals tightly.

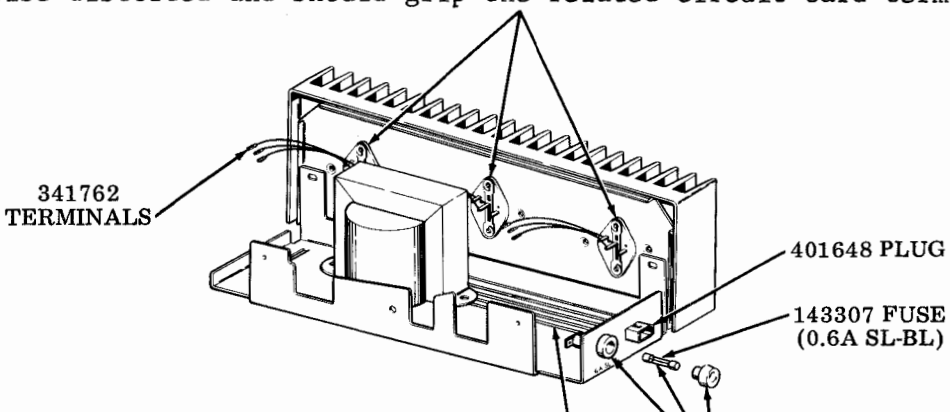

- Check that the transformer wiring insulation is without nicks or abrasions and that the 401647 receptacle and 401648 plug are both free of cracks. Make sure the lug on the green wire of the 401648 plug is securely bolted to the KDA chassis.

- Inspect the fuse holder for cracks. The fuse holder cap should lock the fuse securely in place. Verify that the fuse is the correct type, as detailed above.

After any defects uncovered by inspection are repaired, reassemble the circuit card into the KDA. Leave the 405962 cover OFF until testing is completed.

B. SHOP PROCEDURES (Cont)

3. INSPECTION

345630 EIA Switch Assembly and 341986 Cable Assembly

- Examine for the condition and presence of four 401204 cushion bumpers attached to the bottom plate. Replace if defective or missing. The bumpers are equipped with adhesive for fastening.

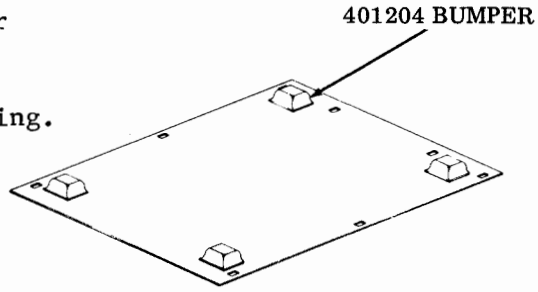

- Observe the condition of the control pushbuttons. Replace if cracked, broken or otherwise defective.

- Check both circuit cards. Replace the 345636 assembly if either card is cracked, broken or if the connector lands are torn or missing.

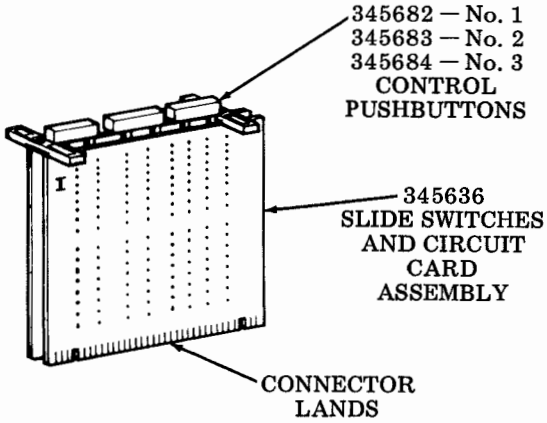

- Depress switch no. 1. The switch must latch in the operated position. Depress switch no. 2. Switch no. 1 must release and switch no. 2 must latch operated. Repeat the operation to verify that any switch latched operated will be released by depressing either of the remaining switches. Replace the 345636 assembly if any switch does not latch operated or fails to release when another switch is depressed.

- Observe condition of the 148440 circuit card connectors. Replace connectors with cracked or broken bodies and/or with deformed or corroded contact springs. Minor contact tarnish or dirt may be cleaned with 337449 Freon degreaser spray.

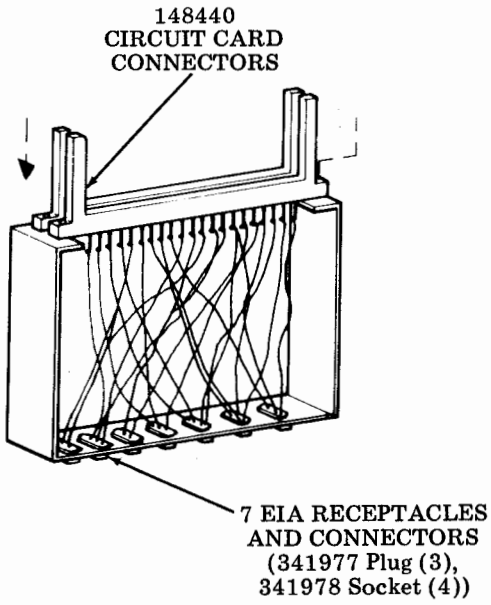

- Examine the seven EIA receptacles and connectors (341977 for P1, P3 and P4, 341978 for J2, J4, J6 and J7) for cracks and bent, broken or corroded terminals (341792 male or 341793 female). Repair or replace, as required. Tarnished or dirty terminals may be cleaned with 337449 Freon degreaser spray.

- Check that wiring is in place. Refer to 9553WD, if necessary to replace or repair any broken wiring. Make sure the spade terminal of the green wire attached to J7, pin 1 is secured by the chassis screw.

- Check the 341896 cable assembly as detailed under Answer-Back Circuit Cards and 341896 Cable Assembly.

Plug the switch assembly into the connector assembly. Do not install in the 345628 box and 345629 cover until testing is completed.

4. MARKING AND PACKING

Marking

After testing and any repairs are completed and before packing, the unit may be marked with the repair date and any other pertinent information. Marking may be rubber stamped with white printers ink or written on an adhesive backed label. See below for the suggested marking areas.

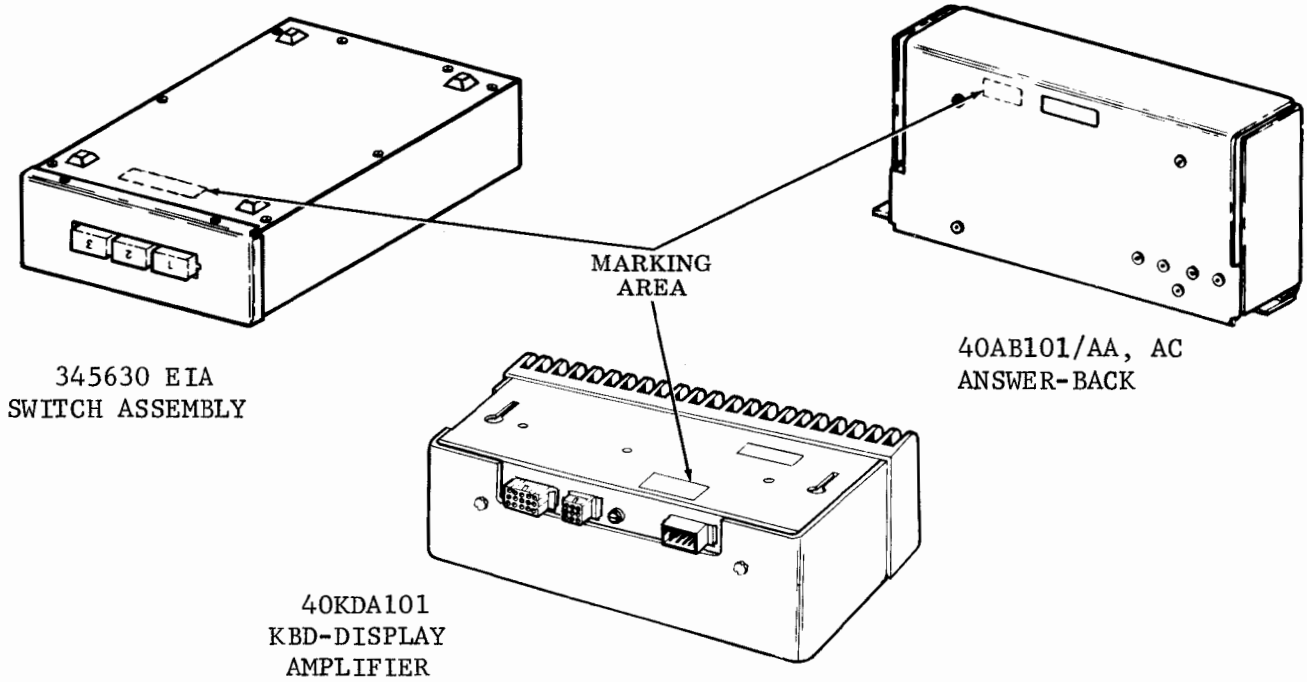

Packing (Answer-Back)

The packing material (available from Teletype Corporation) required for answer-back units is as follows:

(1)	9022PK	Corrugated Carton	*21298PK Tissue Paper
(1)	21307PK	Plastic Bag	*21719PK Tape
(1)	23465PK	Plastic Bag	
(1)	27643PK	Label	*As Required
(1)	28203PK	Corrugated Detail	
(1)	28204PK	Corrugated Detail	

B. SHOP PROCEDURES (Cont)

4. MARKING AND PACKING, Packing (Answer-Back) (Cont)

a. Record serial number of unit.
b. Place following parts in the 21307PK plastic bag.

(3)	184055 Screws	(3)	337434 Clips
(1)	185871 Screw	(3)	344373 Straps

Tie bag with parts to one end of the 341896 cable assembly.

c. Form a 28203PK corrugated detail and position against unit as illustrated. The tabs on the ends of the detail must be positioned in the slots on either end of the unit.
d. Place unit with detail in a 23465PK plastic bag. (Not shown in illustration.)
e. Form a 9022PK carton. Close bottom flaps and seal with a strip of 21719PK tape applied to the center seam. The tape should extend approximately three inches down the ends of the carton.
f. Center prepacked unit in carton as shown.
g. Form a 28204PK detail and place in carton on top and sides of unit as illustrated.
h. Coil the cable in the void formed by the 28204PK detail. Fill void space with 21298PK tissue paper. (Not shown in illustration.)
i. Close and seal top flaps of carton as outlined in e.
j. Moisten and apply a 27643PK label to upper left-hand portion of top of carton. Mark serial number and code designation on end of carton.

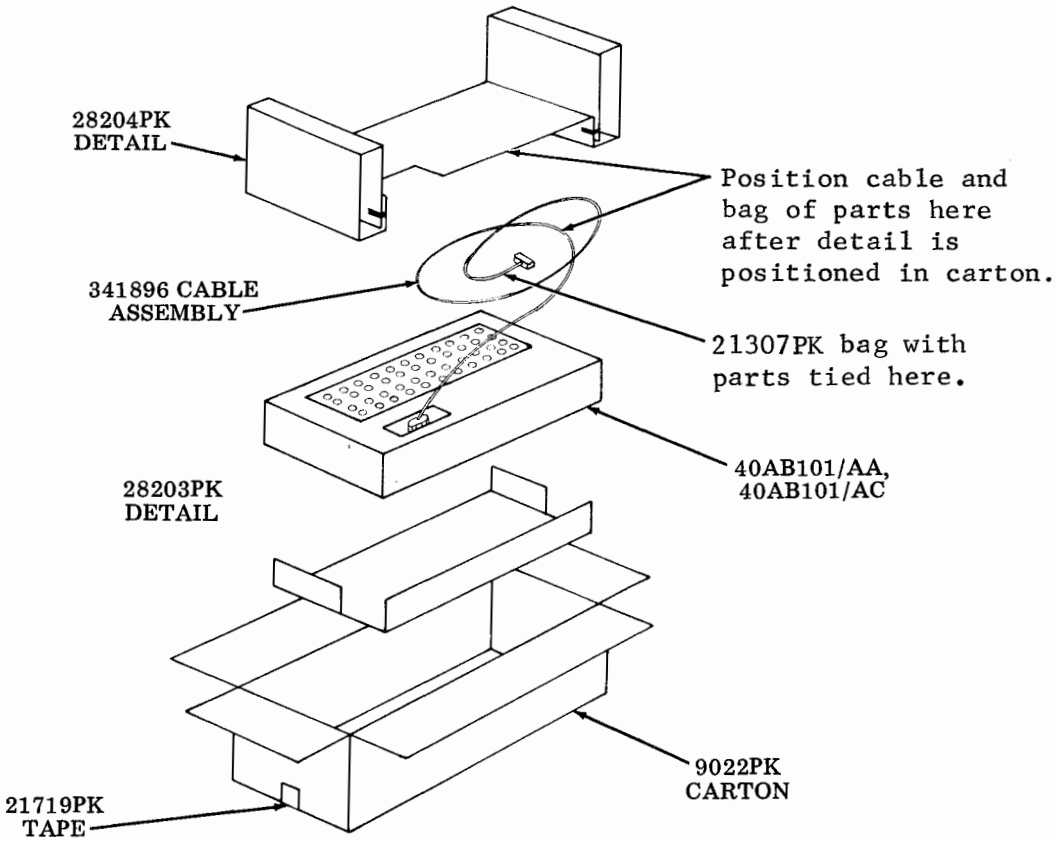

Packing (KDA)

The packing material (available from Teletype Corporation) required for KDA units is as follows:

(1)	8889PK	Corrugated Carton	*21719PK Tape
(1)	9064PK	Corrugated Carton	
(1)	23465PK	Plastic Bag	*As Required.
(2)	23643PK	Label	
(8)	28153PK	Plastic Corner	
(1)	28257PK	Corrugated Detail	
(1)	28258PK	Corrugated Detail	

a. Record serial number of unit.
b. Place unit in a 23465PK plastic bag. (Not shown in illustration.)
c. Form a 8889PK carton. Close and seal bottom flaps of carton with a strip of 21719PK tape.
d. Form a 28258PK detail and place in carton.
e. Place unit in carton between folds in detail.
f. Form a 28257PK detail and place in carton over and against sides of unit.
g. Close and seal top flaps of carton as outlined in operation c.
h. Moisten and apply a 27643PK label in upper left-hand corner of top of carton.
i. Form a 9064PK carton. Close and seal bottom flaps as outlined in operation c.
j. Place a 28153PK plastic corner in each of the four corners of the carton.
k. Place prepacked unit inside the plastic corners.
l. Place a 28153PK plastic corner on each of the four corners of the carton.
m. Close and seal top flaps of carton.
n. Moisten and apply a 27643PK label to upper left-hand portion of top of carton. Mark serial number and code designation on end of carton.

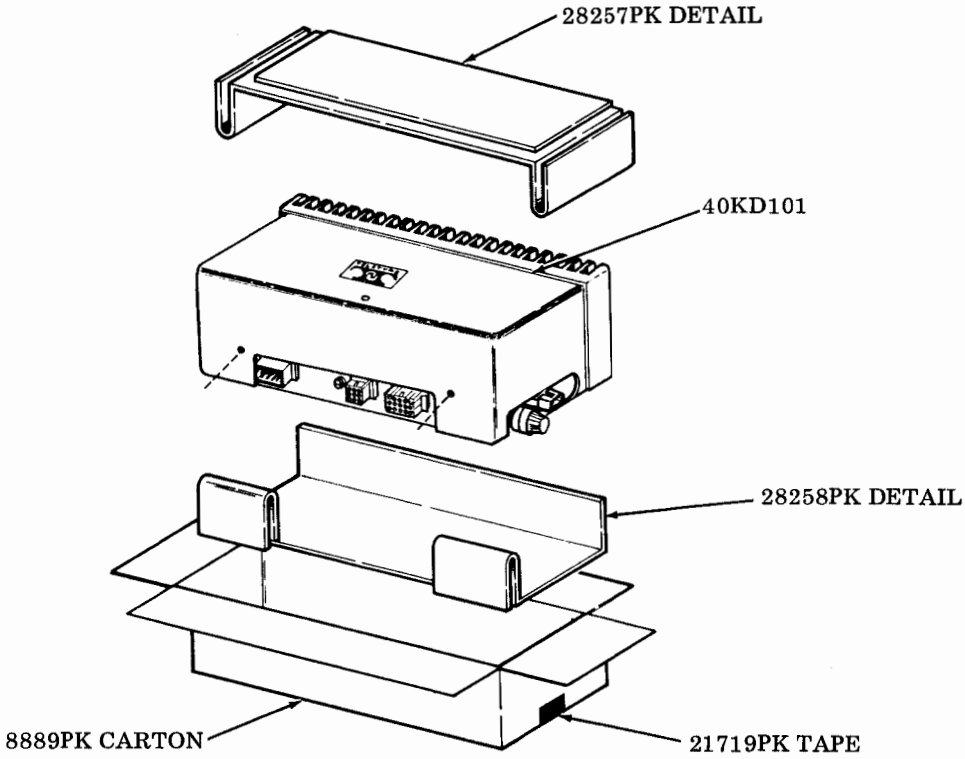

B. SHOP PROCEDURES (Cont)

4. MARKING AND PACKING, Packing (KDA) (Cont)

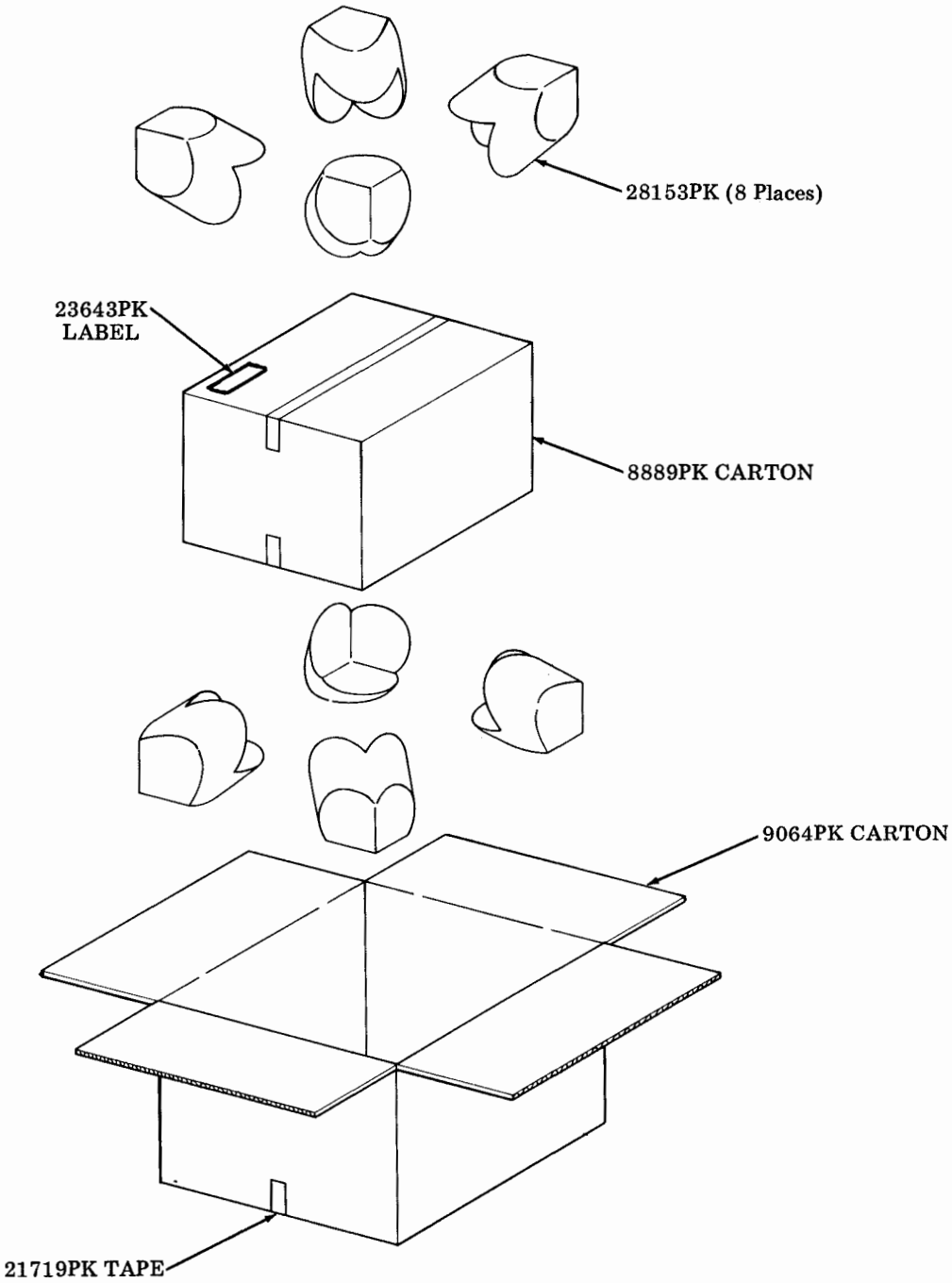

Packing (EIA Switch)

The packing material (available from Teletype Corporation) required for 345630 EIA switch units is as follows:

(1) 9030PK Corrugated Carton	*21480PK Tape
(1) 27643PK Gummed Label	*21719PK Tape
*21298PK Tissue Paper	*27951PK Air Cap, 16" wide

*As Required.

a. Immobilize the three switches in the following manner: With the switches in their unoperated position, take a piece of 21480PK tape approximately six inches long and apply to the front bottom half of the buttons and tape to the cover.
b. Take another piece of 21480PK tape approximately six inches long and apply to the front upper half of the buttons and tape to the cover.
c. Wrap the switch assembly in triple thickness of 21298PK tissue paper. (Not shown in illustration.)
d. Coil the 341986 cable assembly and wrap in a double thickness of 21298PK tissue paper.
e. Tape the cable assembly to the top of the switch assembly with two wraps of 21480PK tape.
f. Wrap the switch and cable package in a four or five layer continuous length of 27951PK air cap. The switch and cable package should be approximately centered. That is, the switch front and rear surfaces should be equidistant from the 27951PK air cap front and rear edges, respectively.
g. Form 9030PK carton. Close bottom flaps and seal center seam with 21719PK tape. Extend tape three inches down carton sides.
h. Fold in open ends of the wrapped package of operation f. so as to protect the switch front and rear surfaces. Insert wrapped package into 9030PK carton. The package should be a snug fit in the carton. If loose, remove package and add additional wrap of 27951PK air cap.
i. Close top flaps of 9030PK carton and seal center seam with 21719PK tape as indicated in operation g.
j. Moisten and apply one 27643PK label at left rear corner of carton top.
k. Mark end of carton with designation "345630 EIA SWITCH".

B. SHOP PROCEDURES (Cont)

4. MARKING AND PACKING, Packing (EIA Switch) (Cont)

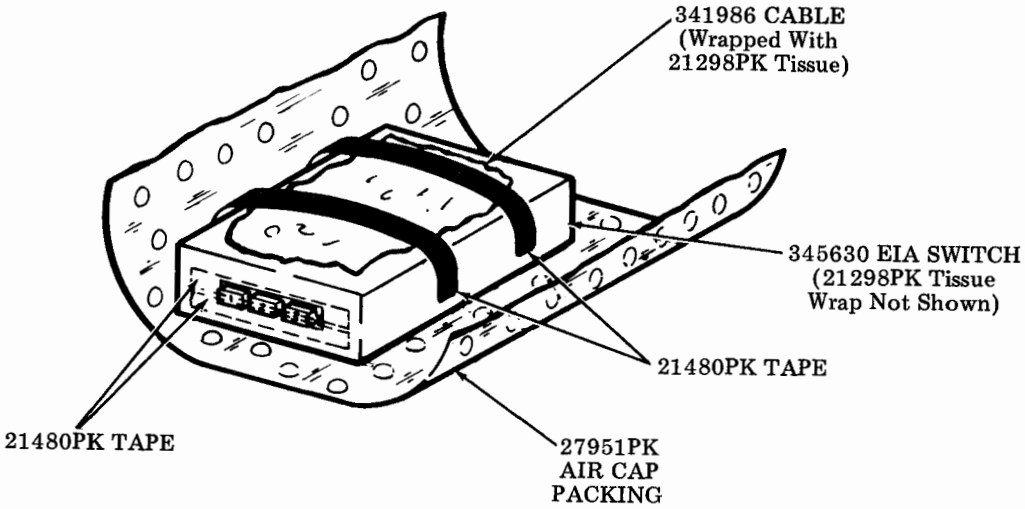

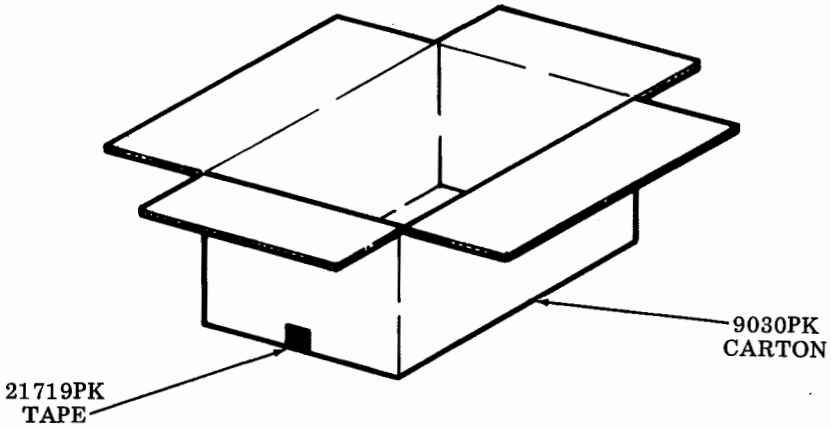

C. ANSWER-BACK UNITS

1. OPTIONS

General

Numbered options 70 through 80 of this section are from the listing of standard Model 40 numbered options detailed in PART 10 -- SETS AND STATIONS.

Several methods are used to activate the various answer-back options. The answer-back message is coded by removing or leaving intact diodes of the 410724 diode matrix circuit card. Other options are enabled by removing or leaving intact certain resistors and/or wire straps and by setting individual switches of designated switch groups.

Several styles of option selecting switches may be present on the answer-back circuit cards. On toggle or slide type switches, options are activated by positioning the toggle or slide toward the ON designation. On rocker type switches, the dotted rocker end or the rocker end adjacent to a dot are positioned down (depressed) to activate an option. Conversely, to deactivate or switch OFF an option, position the toggle or slide away from ON or depress the blank end of the rocker switch.

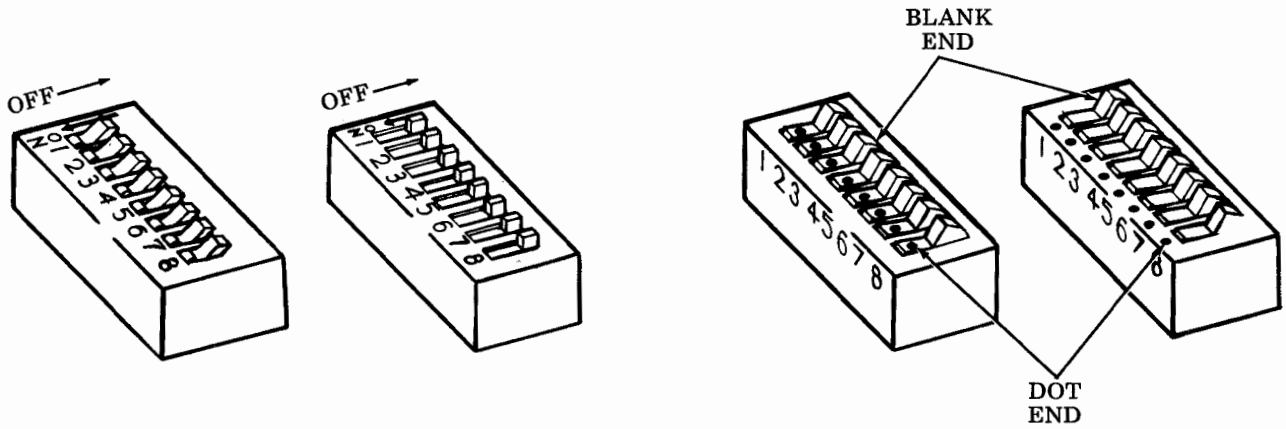

Toggle Style

(Toggles and Slides Shown in OFF Position, Option Deactivated)

Slide Style

Rocker Styles

(Rockers Shown in ON Position, Option Activated)

The option selecting switches are of various sizes, having between four and eight toggles, slides or rockers, numbered accordingly.

C. ANSWER-BACK UNITS (Cont)

1. OPTIONS, General (Cont)

In the following, each of the answer-back units, 40AB101/AA and 40AB101/AC, is treated separately as regards option locations, option programming methods and option charts. Copies of the option charts, detailing the options selected should accompany answer-back units that are shop assembled into Model 40 terminals. Copies of the option charts should also accompany answer-back units shipped for field optioning, so that the user can record the options selected.

Option charts are in the form shown below. The form is varied to accommodate options not utilizing switches for programming.

LOCATION OF SWITCH GROUP ON CIRCUIT CARD

OPTION NO.

OPTION DEFINITIONS

SWITCH NUMBER

	SPB1							
xx	1	2	3	4	5	6	7	
a.	—	—	—	—	●	—	—	†
b.	—	—	—	—	O	—	—	

OPTION SUFFIX AND CONDITIONS

† Factory Programming

40AB101/AA Answer-Back Unit

a. 410724 Diode Matrix Circuit Card (Option 70)

The answer-back message is programmed on the 410724 diode matrix circuit card. This card contains 20 character rows of diodes with 7 bits per row. Diodes are removed by clipping BOTH ends for marking bits and left in place for spacing bits. The LC (Last Character) diode must be removed for all coded characters EXCEPT the last character. All succeeding characters after the remaining LC diode will not be sent.

Before removing any diodes, consult Options 76, 77 and associated notes of the Option Chart.

In the example below, rows 1, 2 and 3 have been programmed for the 1 to 7 bits of the ASCII‡ characters U, *, SPACE.

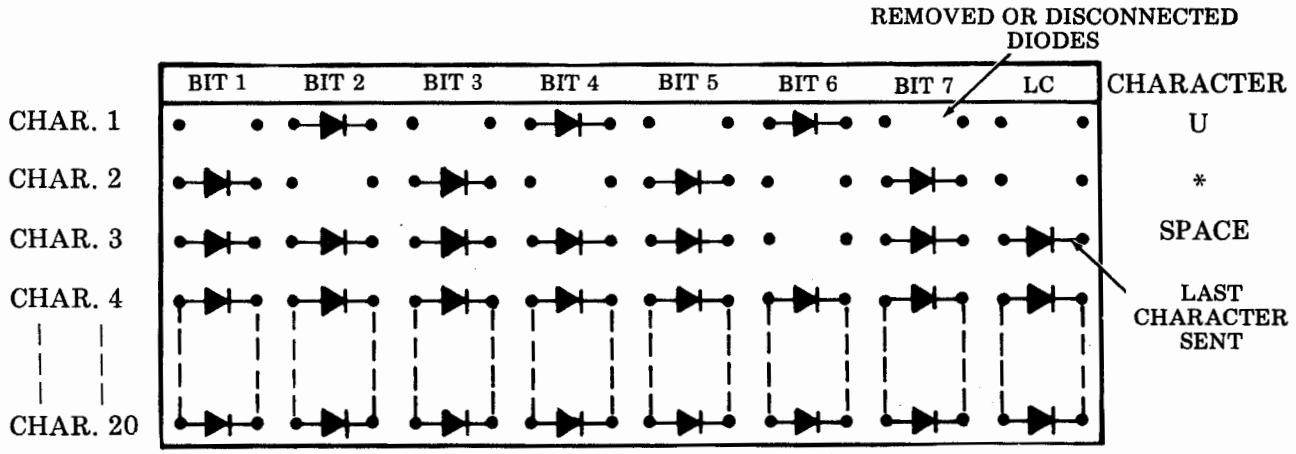

Optioning Example for Option 70

‡ American National Standard Code for Information Interchange

C. ANSWER-BACK UNITS (Cont)

1. OPTIONS, 40AB101/AA Answer-Back Unit (Cont)

b. 410723 Clock Circuit Card (Option 79)

Operating speeds are 1050 baud or 1200 baud. Refer to 2. CONVERSIONS of this section when other baud rates are desired. For operating speed of 1050 baud, leave JU1 strap uncut. For 1200 baud operation, cut both ends of JU1 strap and remove.

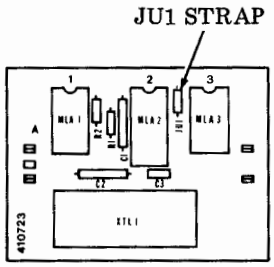

c. 410722 Answer-Back Circuit Card (Options 71, 73 through 78 and 80)

The figure below locates those components associated with options. Refer to d. 40AB101/AA Option Chart for switch settings, strap or resistor retainment or removal, etc, required for specific option combinations.

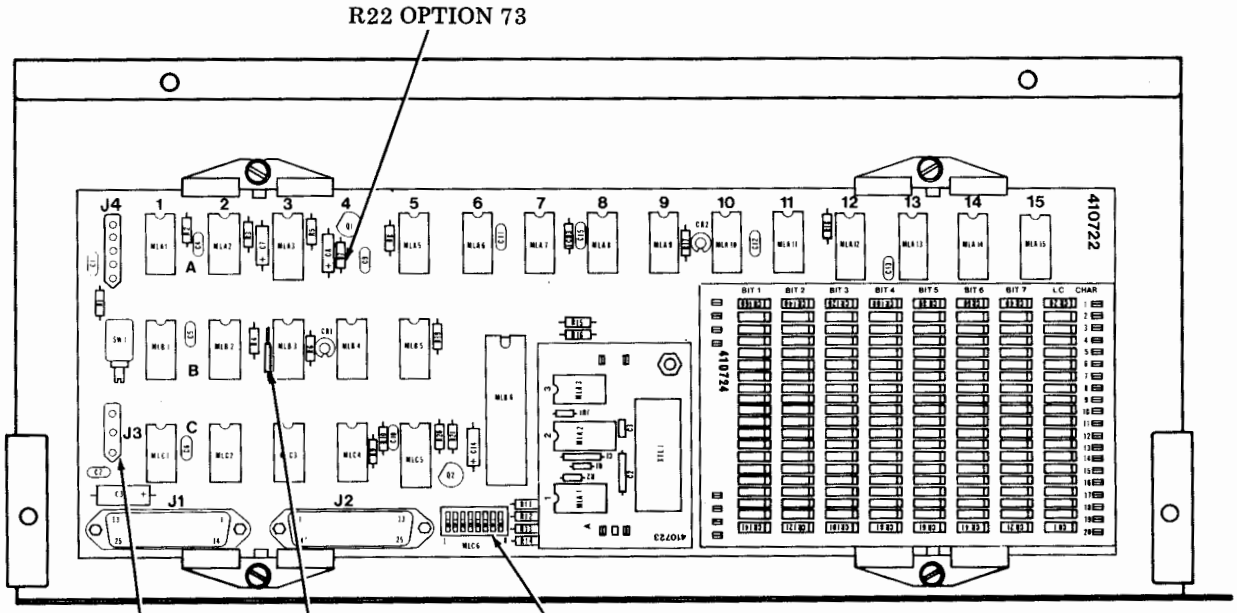

MLC6-1	Option 74
MLC6-2,3	Option 73
MLC6-4	Option 71
MLC6-5	Option 76
MLC6-6,7	Option 77
MLC6-8	Option 78

d. 40AB101/AA Option Chart

70.	Answer-Back Message	
a.	Coded (Specify up to 20 characters including spaces and control characters)	
b.	Not Coded	†

NOTE: Avoid control characters such as EOT, HT, VT, etc, when coding the answer-back message.

		MLC6								
71.	Answer-Back on ENQ	1	2	3	4	5	6	7	8	
a.	Yes	—	—	—	●	—	—	—	—	†
b.	No	—	—	—	O	—	—	—	—	

		Resistor	MLC6								
73.	Reverse Channel Required to Send	R22	1	2	3	4	5	6	7	8	
a.	Yes (See Note 1)	Removed	—	O	●	—	—	—	—	—	
b.	No (See Note 1)	Left in Place	—	●	O	—	—	—	—	—	†

		MLC6								
74.	Answer-Back on Auto Answer	1	2	3	4	5	6	7	8	
a.	Yes (See Note 2)	●	—	—	—	—	—	—	—	†
b.	No	O	—	—	—	—	—	—	—	

		JU1 Strap on 410722 Circuit Board	
75.	Local Copy of Answer-Back		
a.	Yes (See Note 3)	Removed	
b.	No	Left in Place	†

		MLC6								
76.	Parity	1	2	3	4	5	6	7	8	
a.	Even	—	—	—	—	O	—	—	—	†
b.	Odd	—	—	—	—	●	—	—	—	

		MLC6								
77.	Data Bits (Excluding Start, Stop and Parity Bit)	1	2	3	4	5	6	7	8	
a.	5 Bits (See Note 4)	—	—	—	—	—	●	●	—	
b.	6 Bits (See Note 4)	—	—	—	—	—	O	●	—	
c.	7 Bits (ASCII)	—	—	—	—	—	●	O	—	†
d.	8 Bits (See Note 5)	—	—	—	—	—	O	O	—	

		MLC6								
78.	Stop Bits	1	2	3	4	5	6	7	8	
a.	1 Stop Bit	—	—	—	—	—	—	—	●	†
b.	2 Stop Bits	—	—	—	—	—	—	—	O	

● Indicates dot end of rocker switch depressed, toggle or slide positioned on ON.
O Indicates blank end of rocker switch depressed, toggle or slide positioned to OFF.
— Position of switch does not affect option.
† Factory programmed.

C. ANSWER-BACK UNITS (Cont)

1. OPTIONS, 40AB101/AA Answer-Back Unit (Cont)

d. 40AB101/AA Option Chart (Cont)

79.	Baud Rate	JU1 Strap on 410723 Circuit Board	
e.	1050	Left in Place	†
f.	1200	Removed	

80.	"HERE IS" Operation From External Switch	
a.	No.	†
b.	Yes (See Note 6)	

† Factory programmed.

NOTE 1: If Option 73.a. is selected, remove R22 resistor (5100 ohms) to make Clear To Send (CTS) signal time delay of four to six seconds in lieu of 22 ms. If Option 73.b. is selected, the full 20 characters must be used. Fill characters, such as delete or null, should precede and/or follow the coded answer-back characters.

NOTE 2: If Option 74.a. is selected, calls that are manually answered will not enable the answer-back if there is a minimum of 4-seconds delay between the receiver being taken off-hook and the data mode selected.

NOTE 3: If Option 75.a. is selected, the data set must be arranged for local copy.

NOTE 4: If Option 77.a. or 77.b. is selected, program the 410724 diode matrix card starting with bit 1 and ending with the bit number selected. All excess bits will be ignored by the logic. Five-level baudot cannot be generated.

NOTE 5: If Option 77.d. is selected, program the 410724 diode matrix card for the first 7 bits, the eighth bit will always be marking.

NOTE 6: Option 80.b. requires the addition of the parts, shown in the illustration to the right, connected to J3. The external cabling should preferably be shielded twisted pair with the shield grounded.

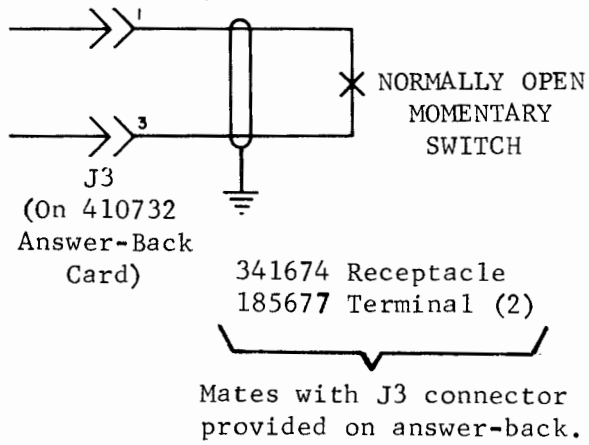

40AB101/AC Answer-Back Unit

a. The 410724 Diode Matrix Circuit Card (Option 70): Refer to 40AB101/AA answer-back, Page 11-21 for details on programming the 410724 diode matrix circuit card.

b. The 410732 Answer-Back Circuit Card (Options 71 Through 80): The figure below locates those components associated with options. Refer to c. 40AB101/AC Option Chart for switch settings, etc, required for specific option combinations.

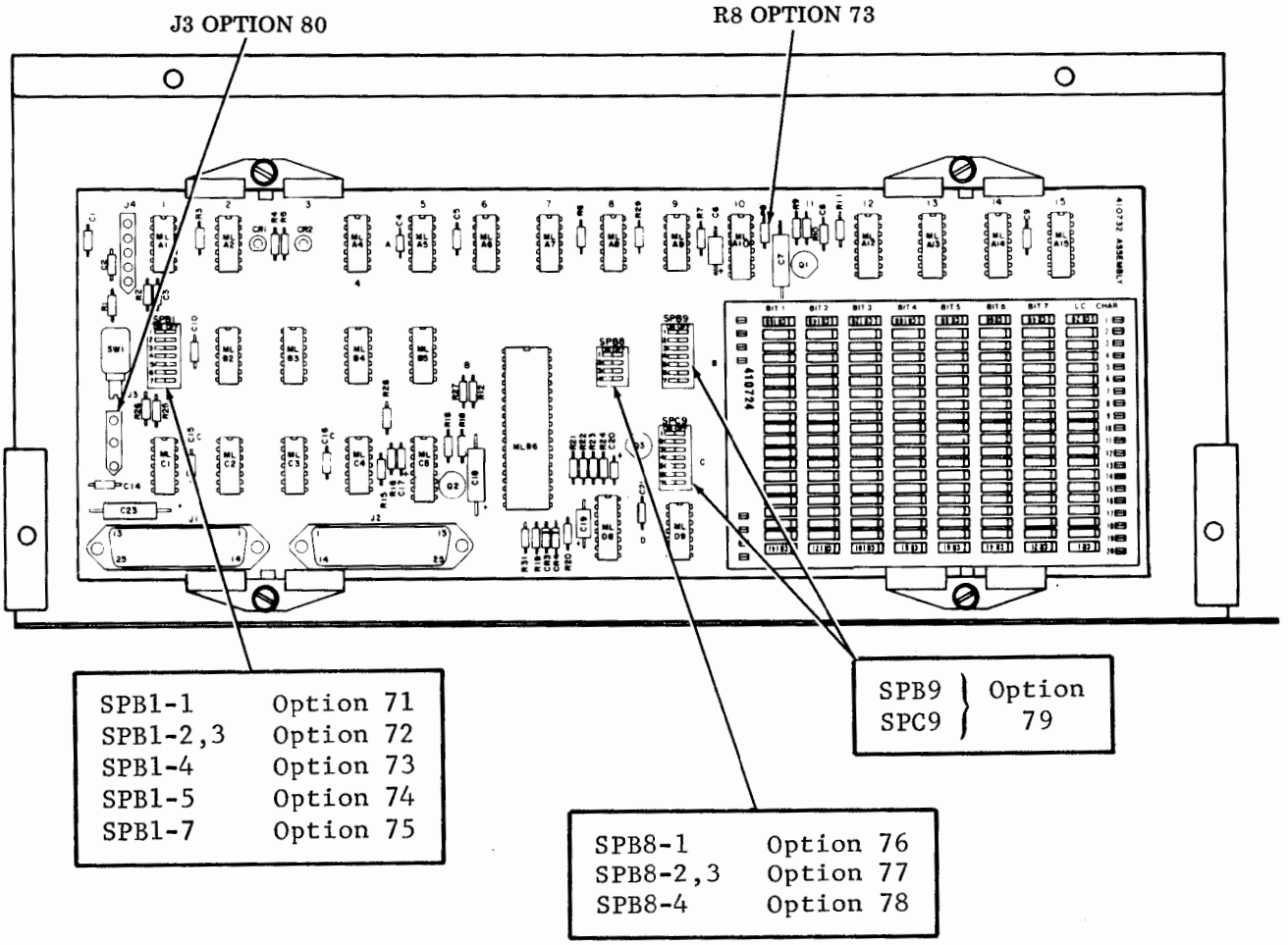

C. ANSWER-BACK UNITS (Cont)

1. OPTIONS, 40AB101/AC Answer-Back Unit (Cont)

c. 40AB101/AC Option Chart

70.	Answer-Back Message	
a.	Coded (Specify up to 20 characters including spaces and control characters)	
b.	Not Coded	†

NOTE: Avoid control characters such as EOT, HT, VT, etc, when coding the answer-back message.

		SPB1							
71.	Answer-Back on ENQ	1	2	3	4	5	6	7	
a.	Yes	●	—	—	—	—	—	—	†
b.	No	O	—	—	—	—	—	—	

		SPB1							
72.	Disconnect Timer (45 Seconds)	1	2	3	4	5	6	7	
a.	Disconnect on Loss of Carrier	—	●	O	—	—	—	—	
b.	Disconnect on Loss of Reverse Channel	—	O	●	—	—	—	—	
c.	Disable Disconnect Timer	—	O	O	—	—	—	—	†

		SPB1							
73.	Reverse Channel Required to Send	1	2	3	4	5	6	7	
a.	Yes (See Note 1.)	—	—	—	●	—	—	—	
b.	No	—	—	—	O	—	—	—	†

		SPB1							
74.	Answer-Back on Auto Answer	1	2	3	4	5	6	7	
a.	Yes (See Note 2.)	—	—	—	—	●	—	—	†
b.	No	—	—	—	—	O	—	—	

		SPB1							
75.	Local Copy of Answer-Back	1	2	3	4	5	6	7	
a.	Yes (See Note 3.)	—	—	—	—	—	—	O	
b.	No	—	—	—	—	—	—	●	†

● Indicates dot end of rocker switch depressed, toggle or slide positioned to ON.
O Indicates blank end of rocker switch depressed, toggle or slide positioned to OFF.
— Position of switch does not affect option.
† Factory programmed.

76.	Parity	SPB8 1	2	3	4	
a.	Even	○	—	—	—	†
b.	Odd	●	—	—	—	

77.	Data Bits (Excluding Start, Stop and Parity Bit)	SPB8 1	2	3	4	
a.	5 Bits (See Note 4.)	—	●	●	—	
b.	6 Bits (See Note 4.)	—	○	●	—	
c.	7 Bits (ASCII)	—	●	○	—	†
d.	8 Bits (See Note 5.)	—	○	○	—	

78.	Stop Bits	SPB8 1	2	3	4	
a.	1 Stop Bit	—	—	—	●	†
b.	2 Stop Bits	—	—	—	○	

79.	Baud Rate	SPB9 1	2	3	4	5	6	7	SPC9 1	2	3	4	5	6	7	
a.	75	●	○	○	○	●	○	●	●	●	●	●	●	●	●	
b.	110	●	○	●	●	●	●	●	○	●	●	●	○	○	●	
c.	150	●	○	○	○	●	○	●	●	●	●	●	●	○	●	
d.	300	○	●	○	○	○	●	○	●	●	●	●	●	○	●	
e.	1050	○	○	○	●	●	○	○	●	●	●	●	●	○	●	
f.	1200	○	○	○	●	○	○	○	●	●	○	●	●	○	●	†
g.	1800	○	○	○	○	●	○	●	●	○	●	○	●	○	●	
h.	2400	○	○	○	○	○	○	●	○	○	●	●	●	○	●	
i.	4800	○	○	○	○	○	●	○	○	●	○	●	○	○	●	
j.	9600	○	○	○	○	●	○	○	○	○	○	○	●	○	●	

80.	"HERE IS" Operation From External Switch	
a.	No	†
b.	Yes (See Note 6)	

● Indicates dot end of rocker switch depressed, toggle or slide positioned to ON.
○ Indicates blank end of rocker switch depressed, toggle or slide positioned to OFF.
— Position of switch does not affect option.
† Factory programmed.

C. ANSWER-BACK UNIT (Cont)

1. OPTIONS, 40AB101/AC Answer-Back Unit (Cont)

   c. The 40AB101/AC Option Chart (Cont)

NOTE 1: If Option 73.a. is selected, remove R8 resistor (5.1K) from the 410732 answer-back circuit card.

NOTE 2: If Option 74.a. is selected, calls that are manually answered will not enable the answer-back if there is a minimum of 4-seconds delay between the receiver being taken off-hook and the data mode selected.

NOTE 3: If Option 75.a. is selected, the answer-back is looped back to the terminal within the answer-back; therefore, the data set must be optioned to operate without the local copy feature. To operate the terminal with local copy, the terminal must be optioned for half-duplex.

NOTE 4: If Option 77.a. or 77.b. is selected, program the 410724 diode matrix card starting with bit 1 and ending with the bit number selected. All excess bits will be ignored by the logic. Five-level baudot cannot be generated.

NOTE 5: If Option 77.d. is selected, program the 410724 diode matrix card for the first 7 bits, the eighth bit will always be marking.

NOTE 6: Option 80.b. requires the addition of the parts, shown in the illustration to the right, connected to J3. The external cabling should preferably be shielded twisted pair with the shield grounded.

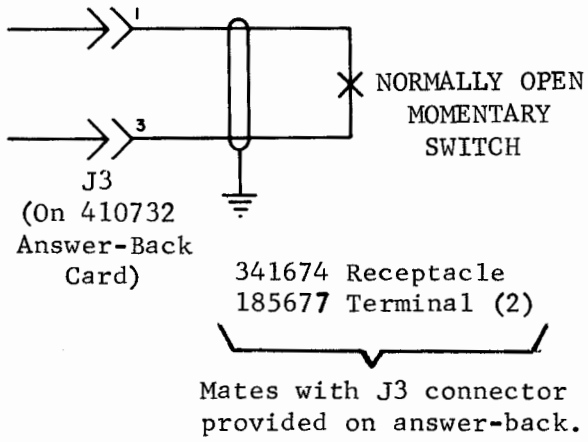

2. CONVERSIONS

40AB101/AA Answer-Back Unit

a. When baud rates other than 1050 or 1200 baud are desired, substitute the 410140 variable bit timer circuit card for the 410723 clock circuit card. Refer to the table below for the various baud rates and switch combinations.

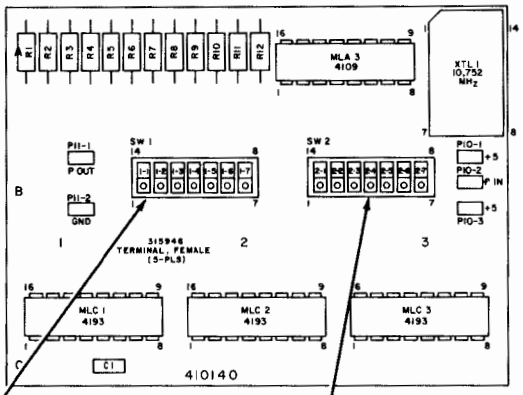

79.	Baud Rate	SW1 1	SW1 2	SW1 3	SW1 4	SW1 5	SW1 6	SW1 7	SW2 1	SW2 2	SW2 3	SW2 4	SW2 5	SW2 6	SW2 7
a.	75	O	O	O	●	●	●	O	●	●	●	●	●	O	●
b.	110	●	●	O	●	●	O	●	●	O	●	●	●	●	O
c.	150	O	O	O	●	●	●	O	●	●	●	●	●	●	O
d.	300	O	O	●	O	O	●	●	O	●	●	●	●	●	O
e.	1050	O	●	O	O	●	●	O	O	●	●	●	●	●	O
f.	1200	O	●	O	O	O	●	O	O	●	●	●	O	●	O
g.	1800	O	O	O	O	●	●	O	●	●	O	O	●	●	O
h.	2400	O	O	O	O	O	O	O	●	●	●	O	●	●	O
i.	4800	O	O	O	O	O	O	●	O	O	●	●	O	●	O
j.	9600	O	O	O	O	●	O	O	O	●	O	O	O	●	O

● Indicates dot end of rocker switch depressed, toggle or slide positioned to ON.
O Indicates blank end of rocker switch depressed, toggle or slide positioned to OFF.

b. If the 410140 variable bit timer is used in conjunction with Option 71.a. at 300 baud or less (103-type data sets), the 410722 answer-back circuit card must be modified as shown in the illustration to the right. The card should be marked or tagged to indicate the change has been made. The cut land must be strapped and soldered together for any subsequent answer-back operation at 1050 or higher baud rates.

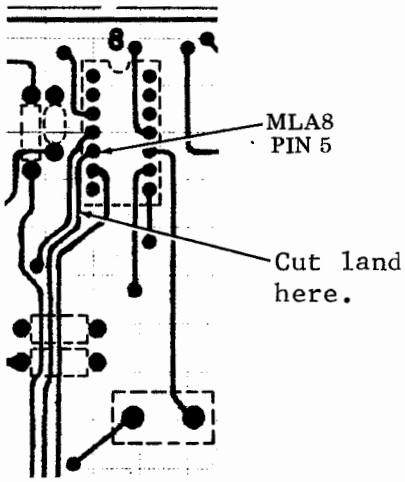

MLA8 Component Side

C. ANSWER-BACK UNITS (Cont)

2. CONVERSIONS, 40AB101/AA Answer-Back Unit (Cont)

c. If the 410140 variable bit timer is used in conjunction with Option 75.a. at 300 baud or less (103-type data sets), the 410722 answer-back circuit card must be modified on the non-component side. Cut land connecting MLC4 pins 12 and 13. Connect MLB4 pin 4 to MLC4 pin 12 with no. 30 AWG insulated wire. The card should be marked or tagged to indicate the change. The cut land must be strapped and soldered and the wire removed for any subsequent answer-back operations at 1050 or higher baud rates.

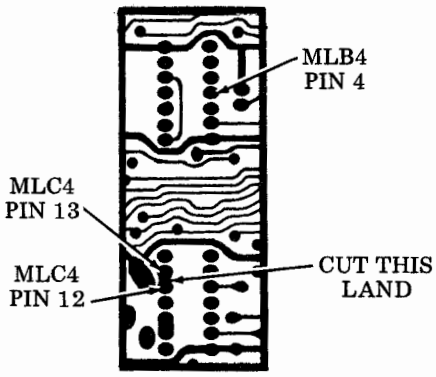

MLB4, MLC4
NONCOMPONENT SIDE

d. The 40AB101/AA answer-back can be converted to a 40AB101/AC answer-back by replacing the 410722 and 410723 circuit cards with a 410732 circuit card (two cards replaced by one). The 336810 identification plate should be altered or replaced by a new plate carrying the 40AB101/AC code designation.

3. TESTING

Preparation

The checkout procedure should be followed on all repaired answer-back units.

Two Model 40 KD sets, similarly optioned, are required for checking out answer-back units. The sketch below details a typical testing arrangement.

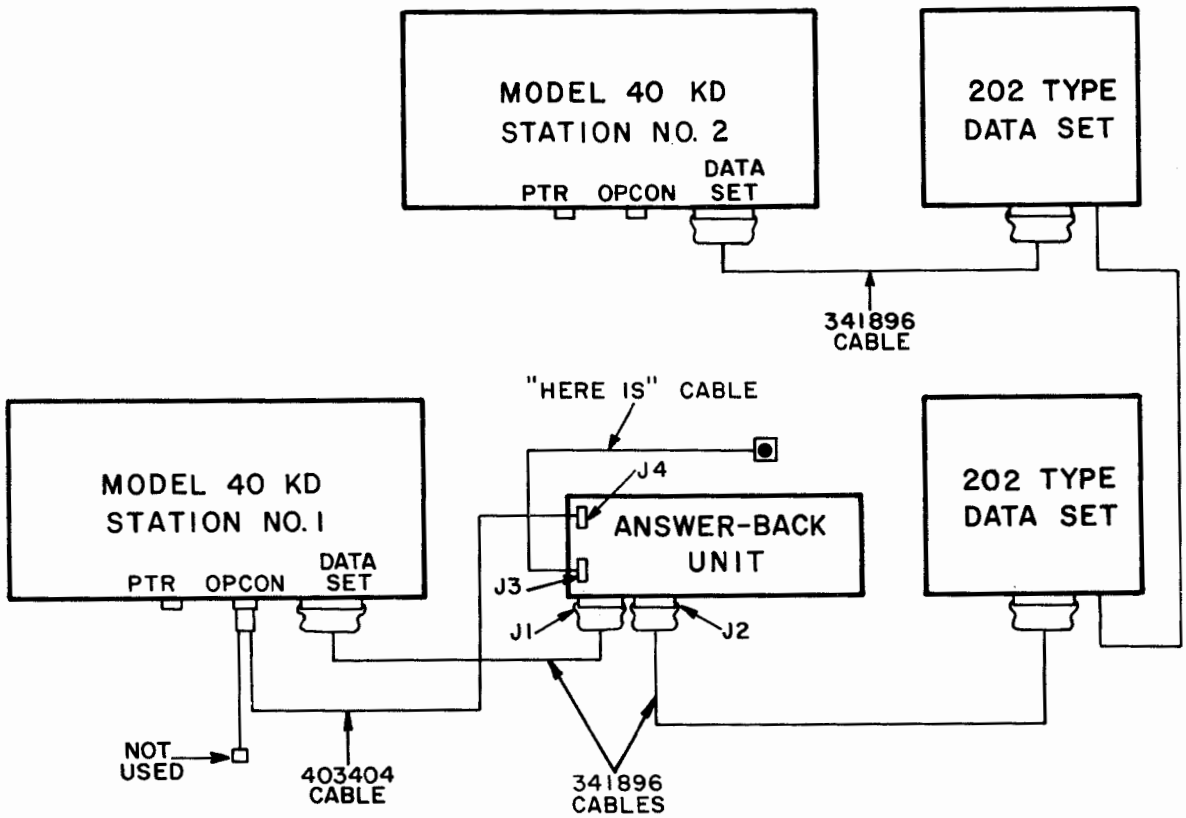

Note that KD no. 1 is the set connected to the answer-back being tested and KD no. 2 is considered the remote set. The remote set may be a distant "on-line" station or a station assembled locally for testing purposes. Alternate arrangements as detailed in Specifications 50865S and 50955S may be used to check either the 40AB101/AA or 40AB101/AC answer-back units.

C. ANSWER-BACK UNITS (Cont)

3. TESTING, Preparation (Cont)

Both the 40AB101/AA and 40AB101/AC answer-back units should be optioned prior to checkout as follows:

§70.a.	74.a.	78.a.
71.a.	75.a.	79.f.
72.c. (40AB101/AC Only)	76.a.	80.b.
73.a.	77.c.	

§ The 410724 diode matrix circuit card may be a shop retained card, optioned as desired, or the card accompanying the answer-back. In the latter case, the card should be optioned to the user's requirements, if known, and the answer-back tested with this card.

Each Model 40 KD controller must be programmed for Option 11.b. mode after Send-Receive.

Before testing, remove the 403402 cover so that CR1 (Send Data) and CR2 (Receive Data) indicators of the 410722 or 410732 circuit cards may be observed. Check that circuit cards and cable connectors are fully seated. Plug the "Here Is" (see A. GENERAL, 2. TOOLS, TEST EQUIPMENT AND DOCUMENTS) cable into J3 of the answer-back unit. Set power switches to ON. Turn up the monitor brightness control and the opcon alarm loudness control.

Operational Checks

Perform the checks in the order listed in the table. Each check is based on previous checks being satisfactory. If the correct result is not obtained, repeat the particular check to insure that the procedure was correct.

When a failure is encountered, refer to the Trouble Analysis numbered procedure, of 4. TROUBLESHOOTING, as indicated in the table. After troubleshooting, rerun the checks up to and including the point where failure occurred to verify that the trouble has been cleared and that new problems have not been introduced.

Though the chart PROCEDURE steps are identical for both the 40AB101/AA and 40AB101/AC answer-back units, there are some differences in the CR1, CR2 indicator operation.

On the 410722 card, CR1 is the SEND DATA indicator which flashes when sending data. The CR2 is the REC DATA indicator which flashes when receiving data. The CR2 also flashes when sending data IF Option 75.a. (Local Copy) is selected.

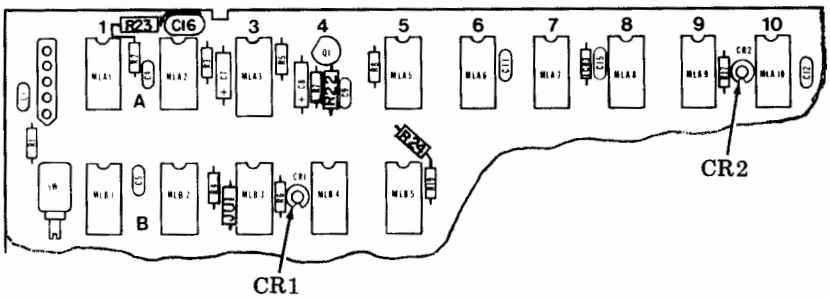

410722 Card of 40AB101/AA Answer-Back

On the 410732 card, CR2 is the SEND DATA indicator which flashes when sending data. The CR1 is the REC DATA indicator which flashes only when receiving data. The Local Copy option, IN or OUT, has NO affect on CR1.

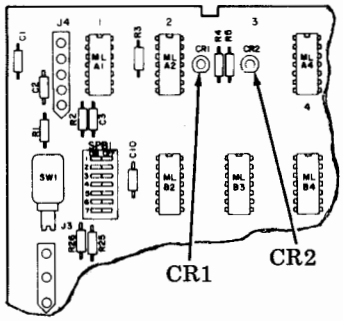

410732 Card of 40AB101/AC
Answer-Back

Note that incorrect options in the answer-back, KD or data set may affect checkout results.

CHECK	PROCEDURE	RESULTS	TROUBLE ANALYSIS ( )
1	Sets 1 and 2 in receive mode. Set 1 in auto. answer mode. Set 2 calls set 1 and goes into data mode.	Sets 1 and 2 display answer-back message correctly. 40AB101/AA The CR1, CR2 indicators flash, indicating data being sent and local copy option selected. 40AB101/AC The CR2 indicator flashes, indicating data being sent.	(1) (2) (5) (6)
2	Set 1 -- Momentarily press SW1 test switch on 410722 or 410732 circuit card.	Same results as for Check 1.	(1) (2) (5) (6)
3	Set 1 -- Momentarily press "HERE IS" switch.	Same results as for Check 1.	(1) (2) (5) (6)
4	Set 2 -- Prepare ENQ ETX test message. Place cursor on ENQ and go to send mode.		

C. ANSWER-BACK UNITS (Cont)

3. TESTING, Operational Checks (Cont)

CHECK	PROCEDURE	RESULTS	TROUBLE ANALYSIS ( )
4 (Cont)	Set 1 in receive mode and auto. answer mode. Set 2 calls set 1. Set 1 answers and goes into data mode. Place set 2 into data mode. Set 2 sends ENQ ETX message to set 1. Set 2 reverts to receive mode. Disconnect call.	Set 1 receives E_Q E_X and sets 1 and 2 display answer-back message. Indicators flash as for Check 1.	(1) (2) (3) (4) (5) (6) (7)
5	Turn off all power to set 1. Change answer-back Option 75.a. to 75.b. Apply power to set 1. Sets 1 and 2 in receive mode and manual answer mode. Set 1 calls set 2. Place set 2 into data mode, then place set 1 into data mode. Set 1 -- Momentarily depress "HERE IS" switch.	Set 2 displays answer-back message correctly. Set 1 does not. 40AB101/AA Only CR1 indicator flashes, indicating data being sent. 40AB101/AC CR2 indicator flashes, indicating data being sent.	(1) (5) (6)

CHECK	PROCEDURE	RESULTS	TROUBLE ANALYSIS ( )
6	Prepare a short message text on set 2. Place cursor on first character of test message. Place set 2 in send mode. Place set 1 in receive mode.		
	Place set 2 into data mode, then place set 1 into data mode.	Set 1 displays text from set 2. 40AB101/AA CR2 indicator flashes, indicating data being received. 40AB101/AC CR1 indicator flashes, indicating data being received.	(1)(5)(6)
	Set 1 -- Place cursor on first character of message text.		(1)(5)(6)
	Place set 1 in send mode and place set 2 in receive mode.		
	Place set 2 into data mode, then place set 1 into data mode.	Set 2 displays text from set 1. Indicators flash as for Check 5.	
	Disconnect call.		

C. ANSWER-BACK UNITS (Cont)

4. TROUBLESHOOTING

General

Trouble isolation and correction is limited to circuit card replacement and wiring and/or connector replacement or repair. Before an in-depth analysis and repair of circuit card problems is attempted, the related schematics and circuit descriptions listed under Documents of A. GENERAL should be consulted. The multimeter and oscilloscope detailed under Test Equipment of A. GENERAL should be at hand for measuring voltages and analyzing waveforms.

The following caution procedures must be observed when troubleshooting.

CAUTION 1: TURN OFF ALL POWER OR SIGNAL SOURCES BEFORE REMOVING OR REPLACING ANY COMPONENT.

CAUTION 2: TO AVOID POSSIBLE INTERNAL DAMAGE TO CIRCUITRY, WEAR A 346392 STATIC DISCHARGE STRAP CONNECTED TO GROUND TO ALLOW STATIC DISCHARGE BEFORE HANDLING CIRCUIT CARDS FOR REMOVAL OR REPLACEMENT. AVOID TOUCHING CIRCUIT LANDS AND CARD COMPONENTS AS MUCH AS POSSIBLE.

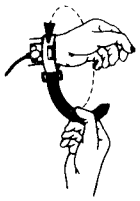

Attach static ground strap tightly to wrist.

Attach clip end of static discharge strap to frame ground.

Trouble Analysis

STEP	TROUBLE SYMPTOM	TROUBLE ISOLATION AND CORRECTION
1	No response from auto answer, ENQ, SW1 or "HERE-IS" switches.	a. Check 403404 cable connector to J4 for proper voltages. If any voltage is missing: Check for bent or broken pin at connector. Check cable continuity or replace cable and retest. If voltage still missing, check opcon connector at rear of KD cabinet, following through to the power supply. 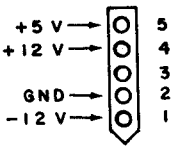 b. Unplug both 341896 cables from J1, J2 of the answer-back unit. Plug the cables together to connect KD Set 1 directly to data set. Call Set 2 and exchange data between Sets 1 and 2. If both sets do not function satisfactorily, refer to the appropriate troubleshooting methods detailed in PART 10. SETS AND STATIONS. In addition, check both 341896 cables for connectors having bent or

STEP	TROUBLE SYMPTOM	TROUBLE ISOLATION AND CORRECTION
1 (Cont)		broken pins. Check that each cable conductor has continuity from connector to connector and that no crosses exist between conductors. When both sets function together, reconnect the answer-back unit and proceed with trouble-shooting. c. On a 40AB101/AA answer-back unit, use the oscilloscope to check for clock pulses at terminal 5 of 410723 card. If clock pulses absent, check terminals 1 and 3 for +5 V and terminal 4 for GND. +5 V or GND missing -- replace 410722 card. +5 V or GND present -- replace 410723 card. 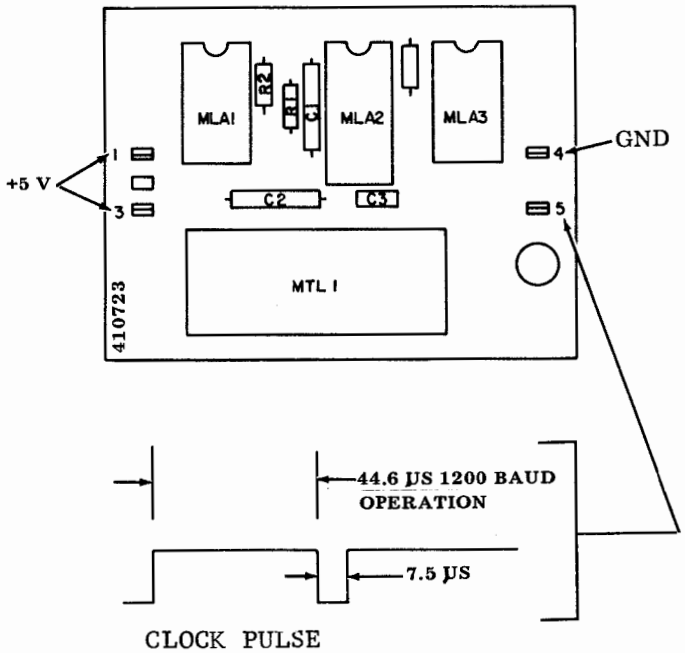 CLOCK PULSE Clock pulses present at terminal 5. Check coding of 410724 card. Coding correct; replace 410722 card. Coding incorrect; recode 410724 card.

C. ANSWER-BACK UNITS (Cont)

4. TROUBLESHOOTING, Trouble Analysis (Cont)

STEP	TROUBLE SYMPTOM	TROUBLE ISOLATION AND CORRECTION
1 (Cont)		d. On a 40AB101/AC answer-back unit, use the oscilloscope to check for clock pulses at: 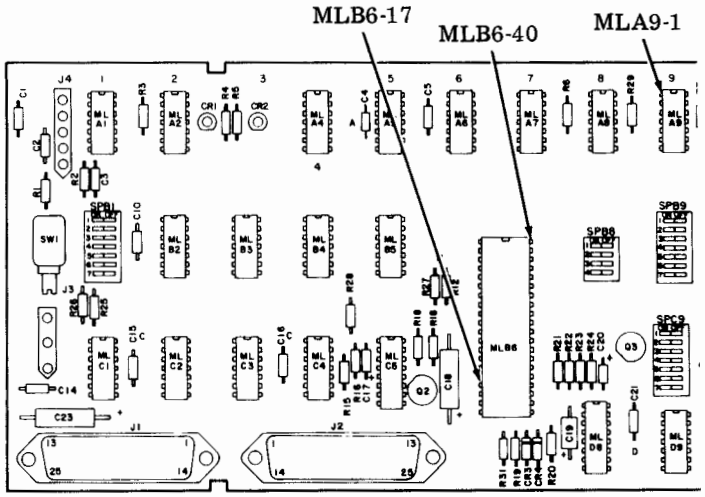 No clock pulses present; replace 410732 card. Clock pulses present; check coding of 410724 card. Coding correct; replace 410732 card. Coding incorrect; recode 410724 card.
2.	No copy of answer-back message at Set 1.	a. Check that Option 75.a. is enabled at the answer-back unit and that the data set meets the conditions of Note 3 of Option 75.a. b. On a 40AB101/AA answer-back unit, if CR1 indicator flashes, indicating transmission OK to Set 2, check CR2. If CR2 indicator does not flash, change the 410722 card and recheck. If CR2 indicator flashes, check J1 connector pin 3 for pulsing. If no pulsing, change 410722 card. If pulsing OK, replace 341896 cable from J1 to Set 1. c. On a 40AB101/AC answer-back unit, if CR2 indicator flashes, indicating transmission OK to Set 2, check J1 connector pin 3 for pulsing. If no pulsing, change 410732 card. If pulsing OK, replace 341896 cable from J1 to Set 1.

STEP	TROUBLE SYMPTOM	TROUBLE ISOLATION AND CORRECTION
2 (Cont)		NOTE: The 40C204 controller, when optioned for full duplex operation, will not allow local printing of the answer-back message from either answer-back unit.
3	No response to ENQ signal.	a. Check that Option 71.a. is enabled at the answer-back unit. b. If CR2 (40AB101/AA) or CR1 (40AB101/AC) indicator does not flash for a received ENQ signal: Check condition of J2 connector pins 3, 4, 5, 6, 8, 13 and 22. Check 341896 cable continuity of leads connected to J2 connector pins 3, 4, 5, 6, 8, 13 and 22. If cable and connector found OK, replace 410722 or 410732 card. NOTE: When the 40AB101/AA answer-back unit is equipped with a 410140 circuit card and is used with a 103 series data set, the 410722 circuit card must have the circuit path to MLA8-5 (Clear To Send) cut as detailed in 2. CONVERSIONS to allow the ENQ signal optioning.
4	Does not revert to receive mode.	a. Check that Option 73. of the answer-back unit matches data set operation as regards to reverse channel operation. b. Check Option 71. of the answer-back unit, if ENQ signal is required. c. Check that last character diode on 410724 matrix card is intact. If cut, replace with 197464 or 407336 diode. If diode OK, check LC terminal for +5 V. Replace 410722 or 410732 card, if +5 V not present. (LC, 7, 6, 1) d. Check that a 4 to 6 ms RTS (Request To Send) pulse appears at J2 connector pin 4 after the answer-back message is sent. If no RTS pulse is present, replace 410722 or 410732 card. If RTS pulse is present, check continuity of 341896 cable (pin 4 to pin 4). If cable fails continuity check, replace or repair.

C. ANSWER-BACK UNITS (Cont)

4. TROUBLESHOOTING, Trouble Analysis (Cont)

STEP	TROUBLE SYMPTON	TROUBLE ISOLATION AND CORRECTION
4 (Cont)		e. On a 40AB101/AA answer-back unit using Option 73.b., verify that the 410724 diode matrix card complies with Note 1 of the Option Chart as regard to fill characters.
5	Garbled answer-back message.	a. Check that the baud rate of Option 79. matches the baud rate of Sets 1 and 2. b. On the 40AB101/AA answer-back unit, replace the 410723 or 410140 card, if used. If still garbling, replace 410722 card and retest. c. On the 40AB101/AC answer-back unit, replace the 410732 card and retest.
6	Answer-back message repeats constantly.	a. Check that the last character diode on 410724 diode matrix card is intact. If cut or missing, replace diode with 197464 or 407336 diode. If the diode is intact, remove the 410724 card and check the forward and reverse resistance between the LC terminal and the numbered terminal representing the last character of the answer-back message. Compare with a known good diode, using the same ohmmeter scales for the same checks. Replace a shorted or open diode. b. Replace the 410722 or 410732 card, if the 410724 diode matrix card is OK.
7	Send mode not entered after receiving proper message sequence.	Check RTS signal (+12 V approximately) at J2 connector pin 4. If signal is not present, replace 410722 or 410732 card.

5. DISASSEMBLY/REASSEMBLY AND PARTS

Disassembly/Reassembly

Disassemble answer-back units by following the numbered sequence shown below. Reassemble in the reverse order shown for disassembly.

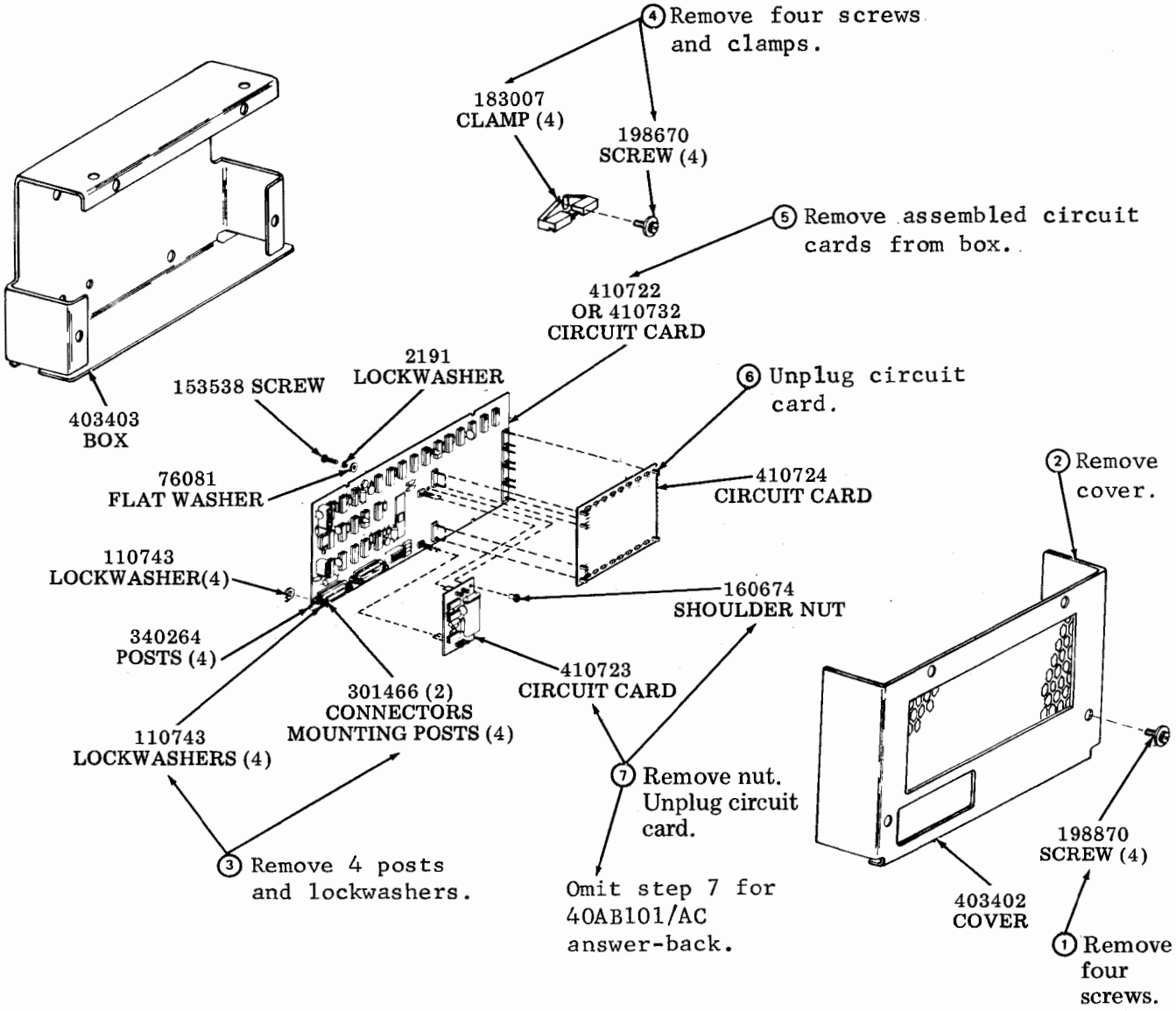

C. ANSWER-BACK UNITS (Cont)

5. DISASSEMBLY/REASSEMBLY AND PARTS (Cont)

Parts

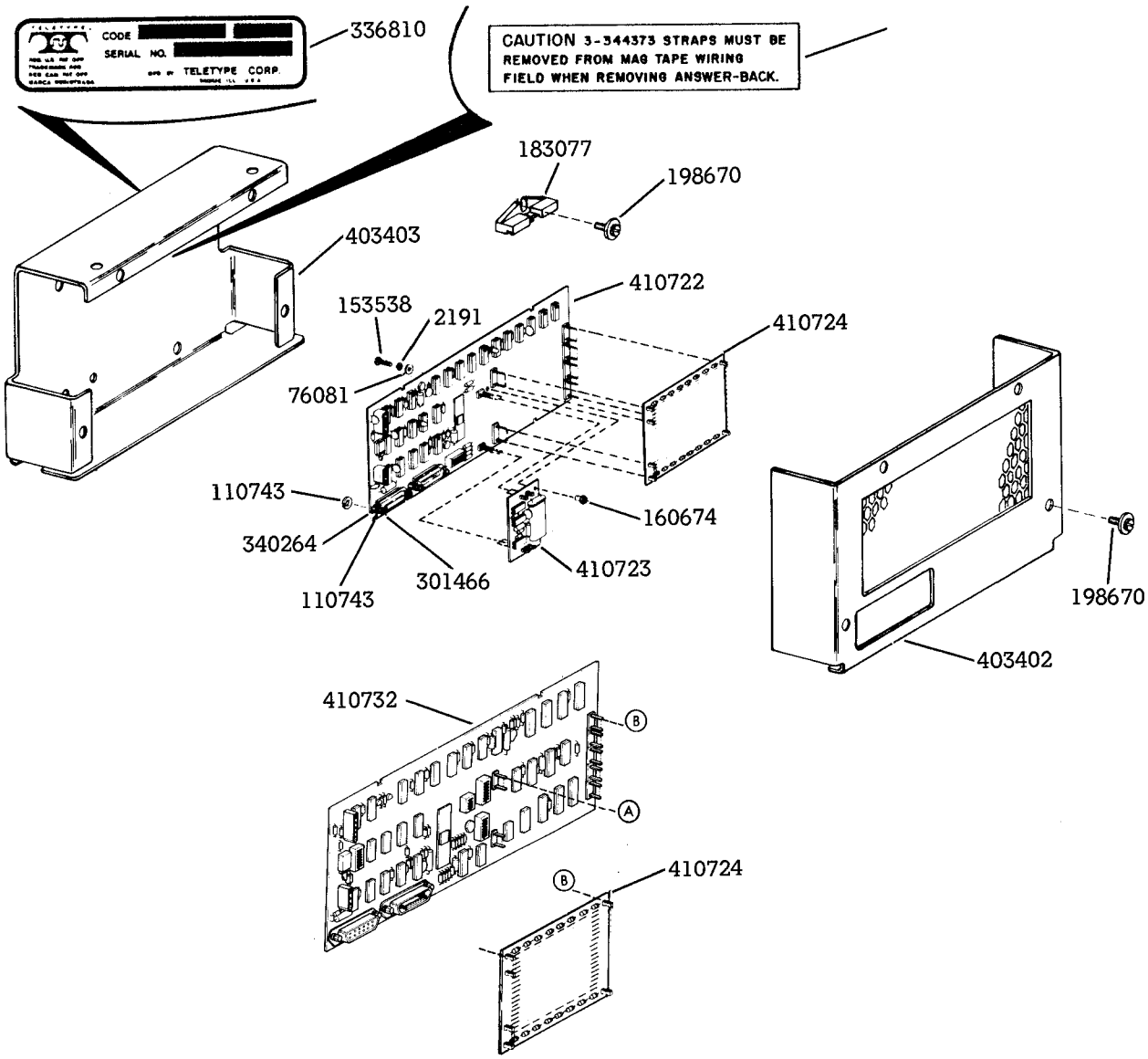

NOTE: The 410722 and 410723 circuit cards are part of 40AB101/AA answer-back. The 410732 circuit card is part of 40AB101/AC answer-back. Other parts shown are common to both answer-back units.

341977 CONNECTOR		341978 CONNECTOR
1	BK	1
2	BR	2
3	R	3
4	O	4
5	Y	5
6	G	6
7	BL	7
8	P	8
11	S	11
12	W	12
15	W-BK	15
17	W-BR	17
20	W-R	20
22	W-O	22
23	W-Y	23

Actual Wiring

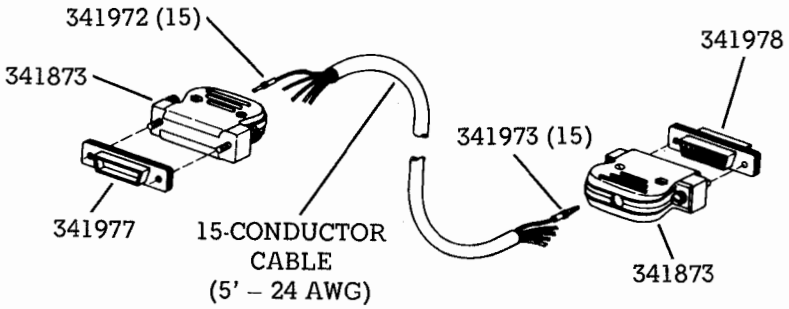

341896 Data Set Cable Assembly

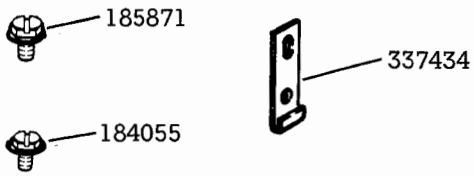

Miscellaneous Hardware

C. ANSWER-BACK UNITS (Cont)

5. DISASSEMBLY/REASSEMBLY AND PARTS, Parts (Cont)

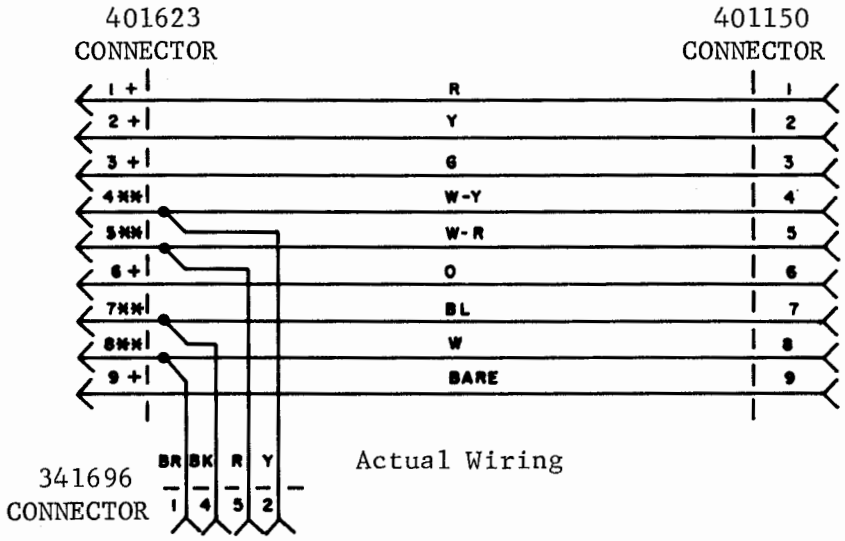

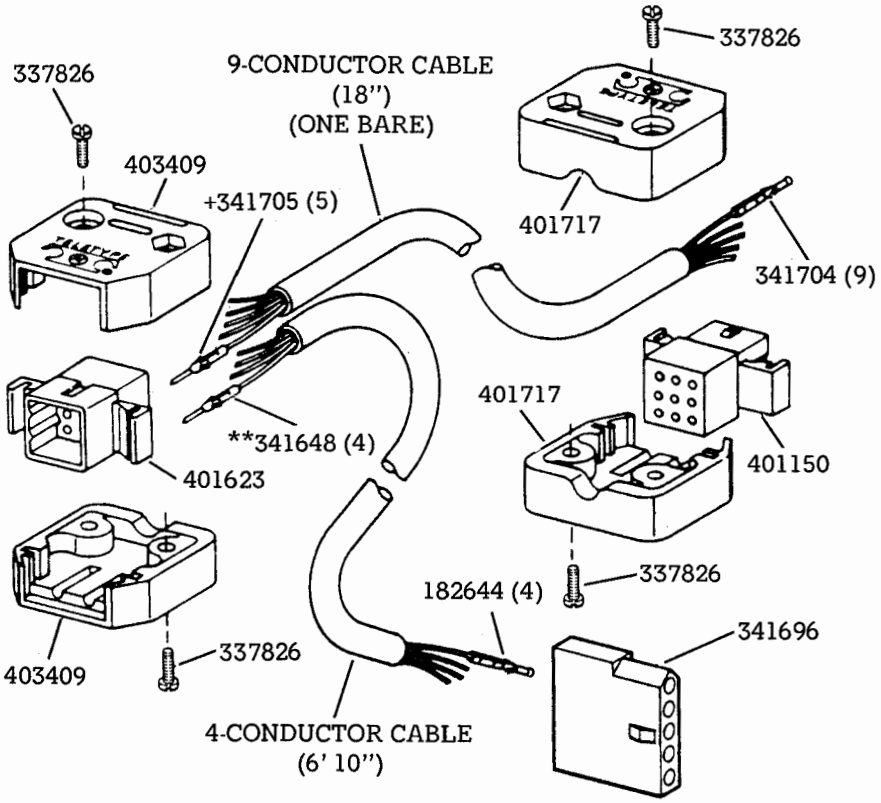

403404 Answer-Back Cable Assembly

[redacted] NOTE: Not included with answer-back unit. Must be ordered separately.

NOTE: When ordering replaceable parts or components, prefix each part number with the letters "TP" (ie, TP410055).

PART NO.	DESCRIPTION AND PAGE NO.
2191	Lockwasher 42
76081	Washer, Flat 42
110743	Lockwasher 42
153538	Screw, 6-40 x 7/16 Hex 42
160674	Nut, 6-40 Shoulder 42
182644	Terminal, Receptacle Type 44
183077	Clamp, Circuit Card 42
184055	Screw w/Lockwasher, 6-40 x 3/16 Hex 43
185871	Screw w/Lockwasher, 8-32 x 3/8 Hex 43
198670	Screw w/Lockwasher, 6-40 x 5/16 Hex 42
301466	Screw, 4-40 Spl 42
336810	Plate, Identification 42
337434	Clip 43
337826	Screw, 1/2" Pan Hd 44
340264	Post 42
341648	Terminal, Receptacle Type 44
341696	Connector, 5 Pt Receptacle 44
341704	Terminal, Receptacle Type 44
341705	Terminal, Plug Type 44
341873	Hood, Cable Connector 43
341896	Cable Assembly 43
341972	Pin, Contact 43
341977	Connector, 25 Pt Receptacle 43
341978	Connector, 25 Pt Plug 43
344373	Strap w/Terminal 43
401150	Connector, 9 Pt Receptacle 44
401623	Connector, 9 Pt Plug 44
401717	Relief, Strain 44
403402	Cover 42
403403	Box 42
403404	Cable Assembly 44
403409	Relief, Strain 44
403413	Label, Caution 42
410722	Card, Circuit 42
410723	Card, Circuit 42
410724	Card, Circuit 42
410732	Card, Circuit 42

D. KEYBOARD-DISPLAY AMPLIFIER

1. TESTING

Preparation

The checkout procedure should be followed on all repaired KDA units.

KDA units are tested with the CP10.0100011 monitor and KDA Test Set consisting of a video generator and monitor mounting base with cables. A 40MN101/AA monitor and CP10.0100021 test cable are also required. Connect the KDA to the test equipment in the arrangement shown below. Check that all the switches are in the OFF position before plugging the ac cords into a source of 117 V ac.

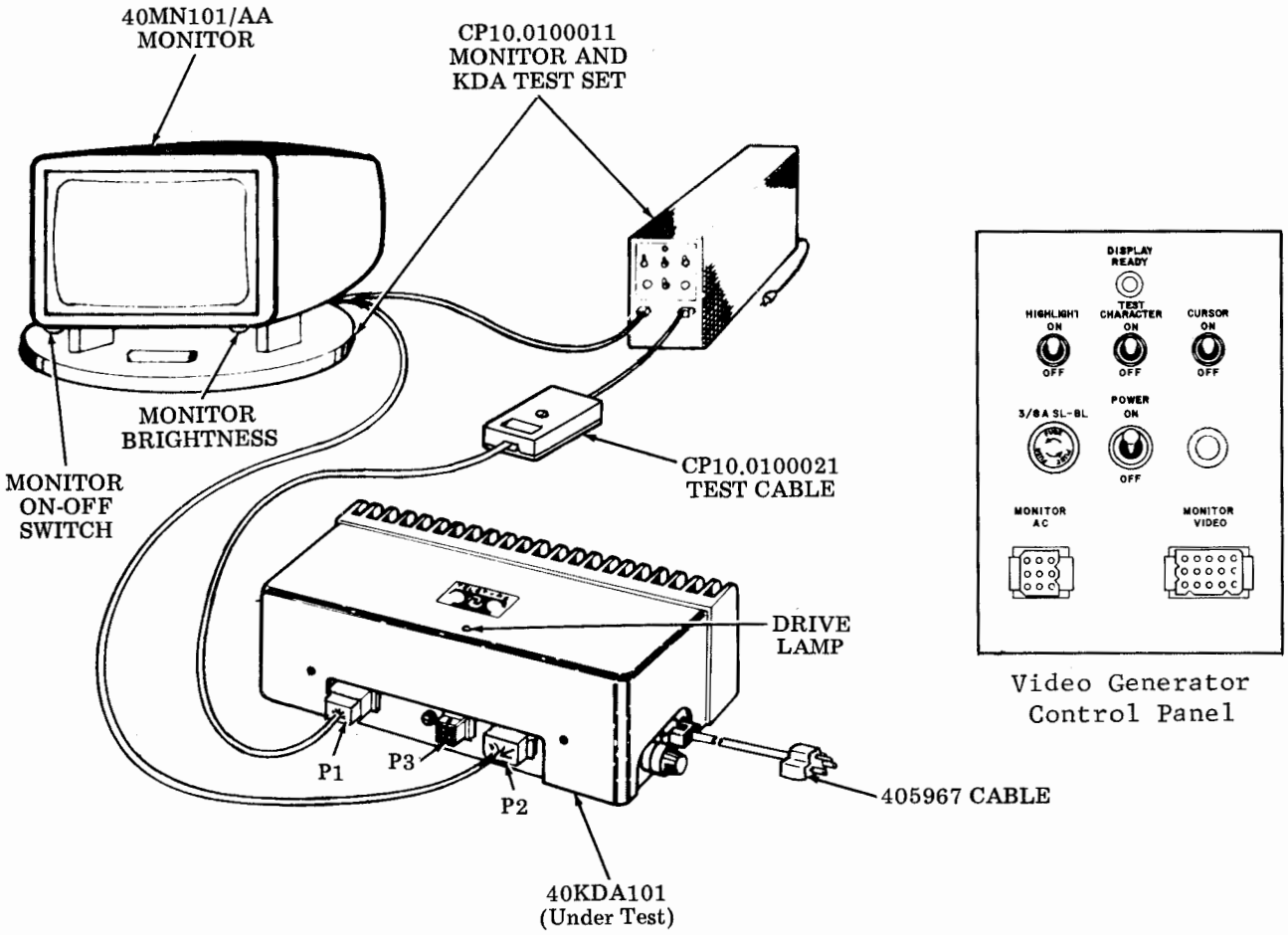

Video Generator Control Panel

Operational Checks

Perform the checks in the order listed in the table. When a failure is encountered, refer to the Trouble Analysis step number of 2. TROUBLESHOOTING, as indicated in the table. After troubleshooting, rerun the checks up to and including the point where failure occurred to verify that the trouble has been cleared and that new problems have not been introduced.

CHECK	PROCEDURE	RESULTS	TROUBLE ANALYSIS
1	Position power switches of video generator and monitor to ON.	Drive lamp (top of KDA) should light.	1
2	Turn up Monitor Brightness control. Turn back brightness so raster is just visible.	Raster should be visible on monitor screen	2
3	Position Cursor switch of video generator to ON.	Monitor screen should be brightly and uniformly illuminated, indicating a cursor present at all 1920 character positions.	3
	Position Cursor switch to OFF.	Check that the monitor display does not roll.	4
4	Position Test Character and Highlight switches of video generator to ON.	Monitor display should alternate between full and half-intensity approximately once per second.	5
	Position Test Character and Highlight switches to OFF.		
5	Use the voltmeter to check for +12, -12 V dc at P3 of the KDA.	Pin 7, +12 (Grd at pin 4) Pin 8, -12 (Grd at pin 4) Voltages should be ±10%. 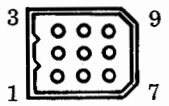 P3	6
6	Position power switches to OFF. Remove test cable connectors from P1, P2 of KDA. Check for continuity between P1, P3 of KDA.	CONNECTOR P1 to CONNECTOR P3 Pin 12 . . . . Pin 1 Pin 9 . . . . Pin 2 Pin 15 . . . . Pin 3 Pin 14 . . . . Pin 6 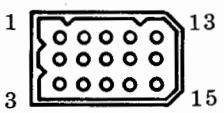 P1 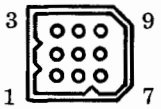 P3	6

D. KEYBOARD-DISPLAY AMPLIFIER (Cont)

2. TROUBLESHOOTING

General

Trouble isolation is limited to circuit card replacement, power supply component replacement and wiring and for connector replacement or repair. Several schematics are provided under Schematics to facilitate checking voltages or waveforms. Before an in-depth analysis of circuit card problems is attempted, the related schematics and circuit descriptions listed under Documents of A. GENERAL should be consulted. The multimeter and oscilloscope detailed under Test Equipment of A. GENERAL should be at hand for measuring voltages and analyzing waveforms.

The following caution procedures must be observed when troubleshooting.

CAUTION 1: TURN OFF ALL POWER OR SIGNAL SOURCES BEFORE REMOVING OR REPLACING ANY COMPONENT.

CAUTION 2: TO AVOID POSSIBLE INTERNAL DAMAGE TO CIRCUITRY, WEAR A 346392 STATIC DISCHARGE STRAP CONNECTED TO GROUND TO ALLOW STATIC DISCHARGE BEFORE HANDLING CIRCUIT CARDS FOR REMOVAL OR REPLACEMENT. AVOID TOUCHING CIRCUIT LANDS AND CARD COMPONENTS AS MUCH AS POSSIBLE.

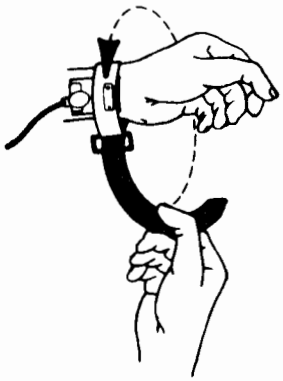

Attach static ground strap tightly to wrist.

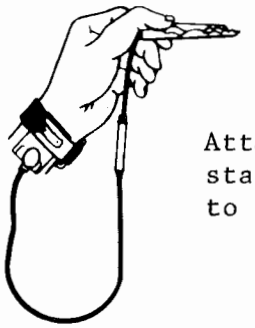

Attach clip end of static discharge strap to frame ground.

Trouble Analysis

STEP	TROUBLE SYMPTOM	ANALYSIS PROCEDURES
1	L1 Drive lamp is not on, but power is applied to the KDA and the test set.	a. Remove ac power to KDA (P4). Check 143307 fuse at F1 (0.6 amp SL-BL). If not blown, go to Step 1 e. If fuse is blown, replace fuse. Restore ac power, then turn ac off and recheck fuse. If fuse has blown again, go to Step 1 b.

STEP	TROUBLE SYMPTOM	ANALYSIS PROCEDURES
1 (Cont)		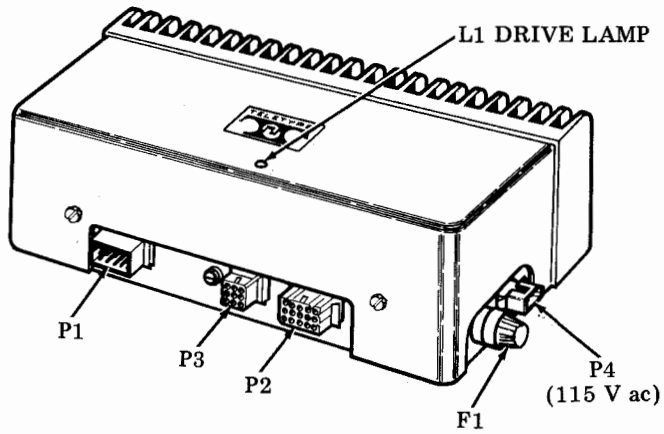 b. Check cord continuity: Remove ac plug from wall receptacle. Disconnect the 405967 cable from connector 115 V ac. Check continuity of the 405967 ac cable (connector pin to ac plug). See Power Flow Diagram of Schematic. If cable fails continuity check, replace or repair. Restore ac cable and turn on ac power. If L1 lamp is still not lighted, go to Step 1 c. after removing power and rechecking fuse. c. Remove cover if in place. Disconnect 401647 (J4 from P4) near the transformer. Check ac voltages at J4 connector. See Power Flow Diagram of Schematic. Apply power; make checks: Between pin 2 and pin 1 = 21 V ac (approx.) Between pin 3 and pin 2 = 21 V ac (approx.) If any voltage is not present, replace the 405977 transformer assembly. If voltages are present, go to Step 1 d. and reconnect J4 to P4.

D. KEYBOARD-DISPLAY AMPLIFIER (Cont)

2. TROUBLESHOOTING, Trouble Analysis (Cont)

STEP	TROUBLE SYMPTOM	ANALYSIS PROCEDURES
1 (Cont)		d. With ac power off, remove monitor cable from P2. Turn on power. 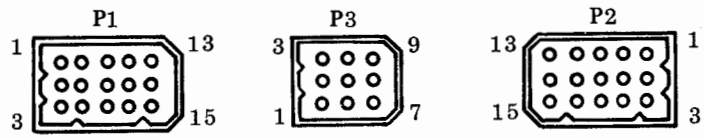 Check that voltage between P2 pin 12 and P2 pin 9 is +5 V dc. If +5 volts is not present or incorrect, go to Step 1 e. If +5 volts is present and the video generator and test cable are known to be functioning correctly, replace the 410575 circuit card of the KDA. 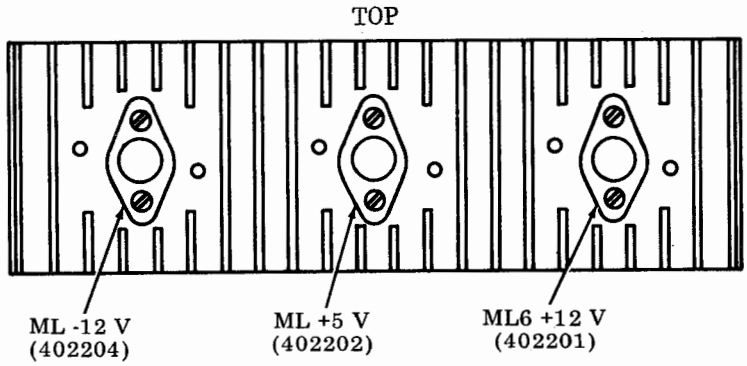 e. Make a voltage check at ML5 (402202 regulator). Place meter between the blue and red leads for a voltage of greater than +5 volts. See Power Flow Diagram of Schematic. If +5 volts is not present, replace the 410575 card of the KDA. If +5 volts is present, but +5 volts was not present between P2 pin 12 and P2 pin 9, replace 402202 ML5 regulator. NOTE: If L1 Drive lamp is still not lighted, go to Step 6 b.

STEP	TROUBLE SYMPTOM	ANALYSIS PROCEDURES
2	Dark screen at monitor, no raster present (with monitor brightness turned on full).	a. If KDA L1 Drive lamp is not on, go to Step 1. b. If KDA L1 Drive lamp is on but the I5 Drive lamp of the monitor is not on, replace 410575 card, assuming monitor and test base are functioning correctly. Ref: Horizontal Drive -- P2 pin 10 to P1 pin 10. Horizontal Return -- P2 pin 8 to P1 pin 9. See Horizontal Drive and Vertical Sync Diagram of Schematics.
3	No cursor present and/or no characters displayed (raster present).	a. Replace 410575 card, assuming monitor and test base are functioning correctly. b. Perform Step 6 b., if voltages are correct, do not go to Step 6 c., go to Step 3 c. Ref: Video Channel P2 pin 6 to P1 pin 6 and Video P2 pin 3 to P1 pin 3. See Video Channel Diagram of Schematics.
4	Display roll-over on screen, continual.	Replace 410575 card, assuming monitor and test base are functioning correctly. Ref: Vertical Sync Channel, P2 pins 11 and 13. See Video Channel Diagram of Schematics.
5	Half-intensity or protected data is displayed at full intensity, all the time.	Replace 410575 card, assuming monitor and test base are functioning correctly. Ref: Half-Intensity Channel, P2 and P1 pins 1 and 2. See Half-Intensity Diagram of Schematics.
6	Any problem related to P3 opcon connector.	a. If +12 V dc is not present at P3 pin 7, replace 402201 ML6 regulator or the 410575 card. b. If the -12 V dc is not present at P3 pin 8, replace 402204 ML7 regulator or the 410575 card. c. If no continuity is found while performing Operational Check 6, replace the 410575 card.

D. KEYBOARD-DISPLAY AMPLIFIER (Cont)

2. TROUBLESHOOTING (Cont)

Schematics

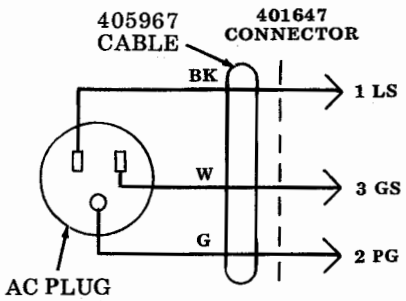

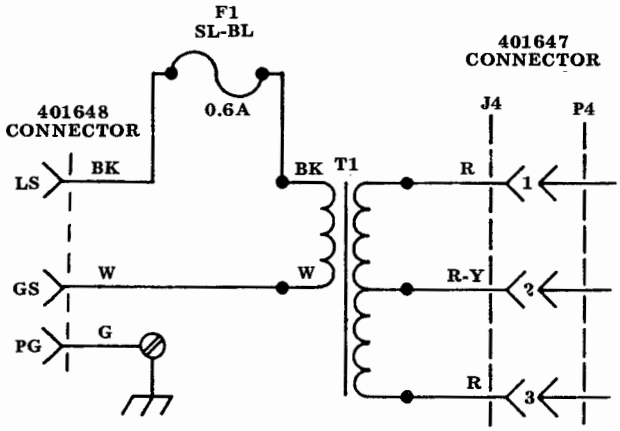

WIRE COLOR CODE

G - GREEN
BK - BLACK
R - RED
W - WHITE
Y - YELLOW

410575 Circuit Card

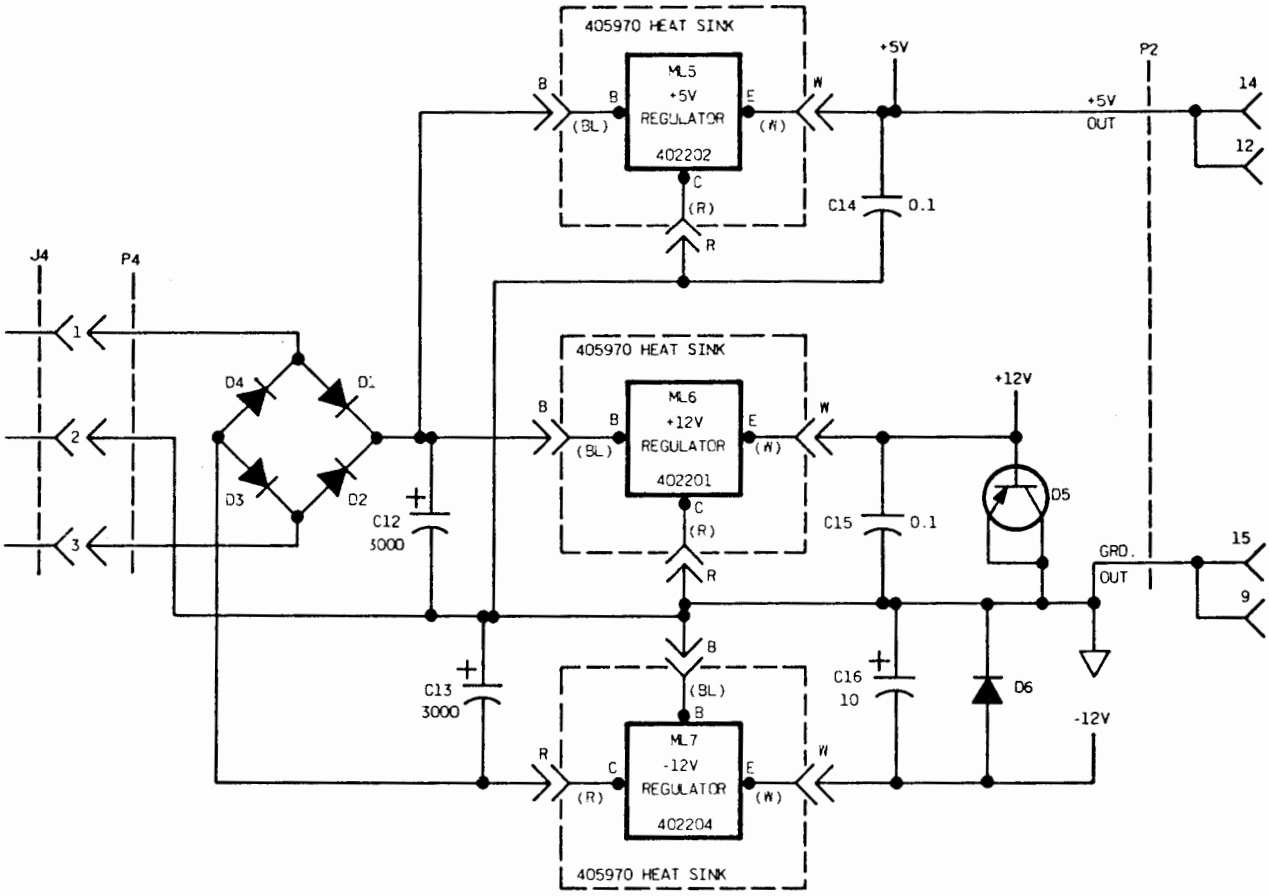

Video Channel (410575 Card)

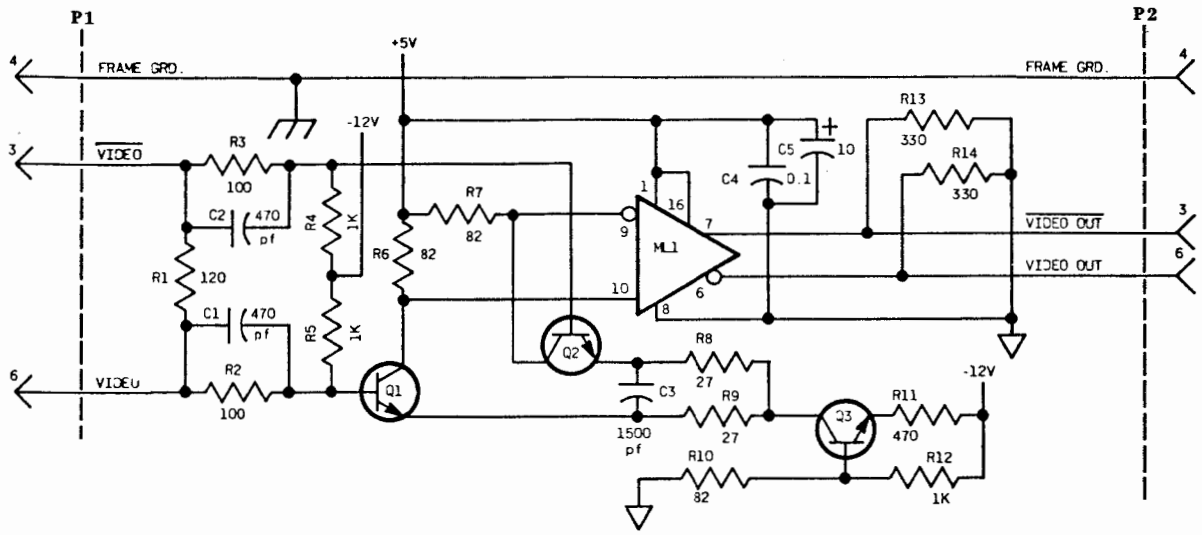

Half-Intensity Channel (410575 Card)

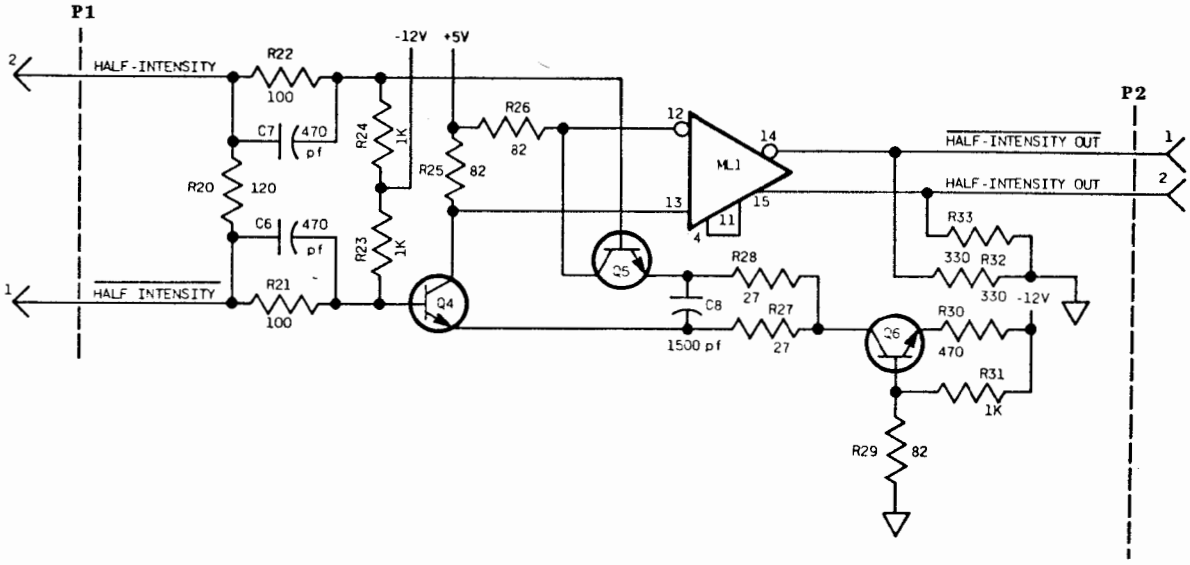

D. KEYBOARD-DISPLAY AMPLIFIER (Cont)

2. TROUBLESHOOTING, Schematics (Cont)

Horizontal Drive and Vertical Sync Channels (410575 Card)

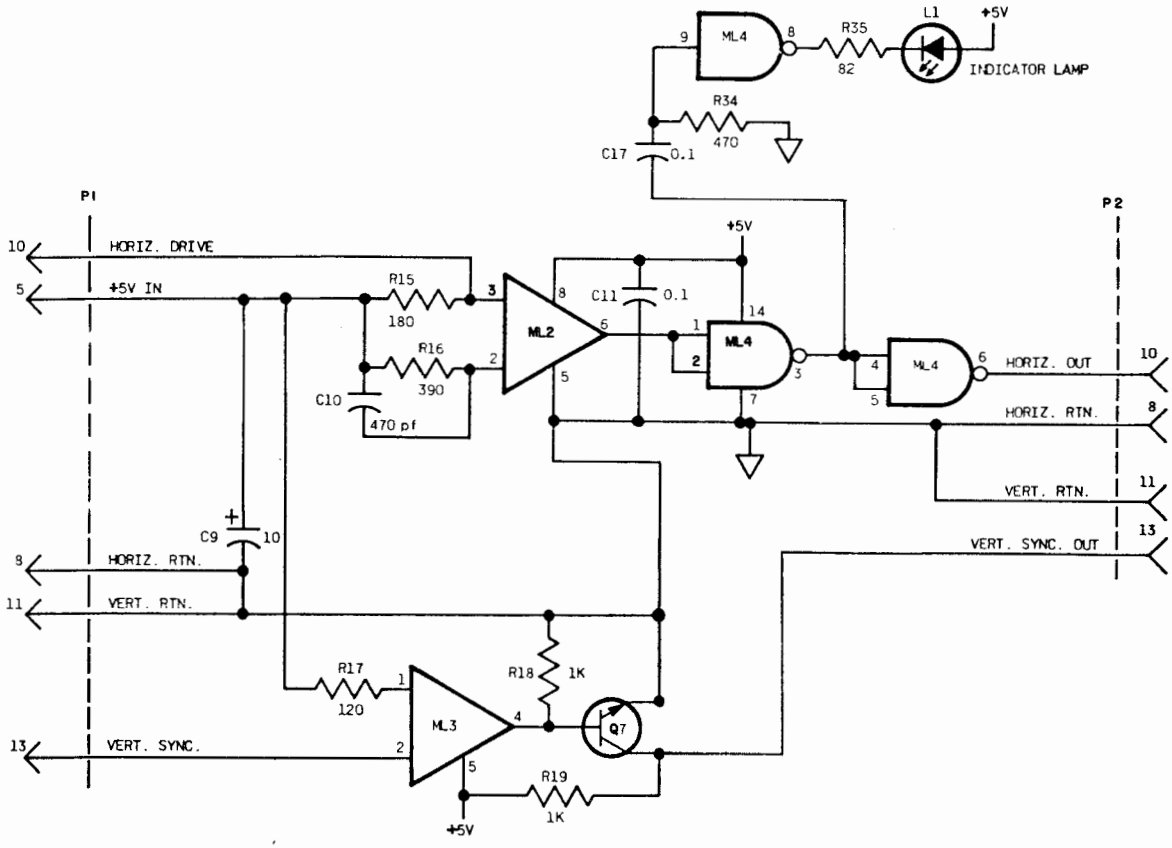

SSI Channel (410575 Card)

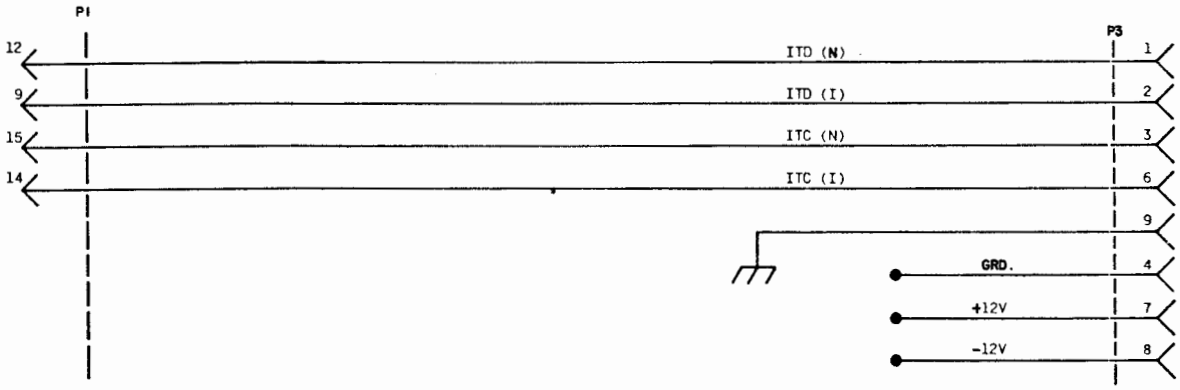

3. DISASSEMBLY/REASSEMBLY AND PARTS

Disassembly/Reassembly

Disassembly or reassembly of individual KDA components is easily accomplished by referring to the exploded parts view on Page 11-56. Remove two 341718 screws and lift the 405962 cover up and off to gain access to the KDA interior. When replacing any of the 402201, 402202 or 402203 regulator transistors, observe the following numbered steps:

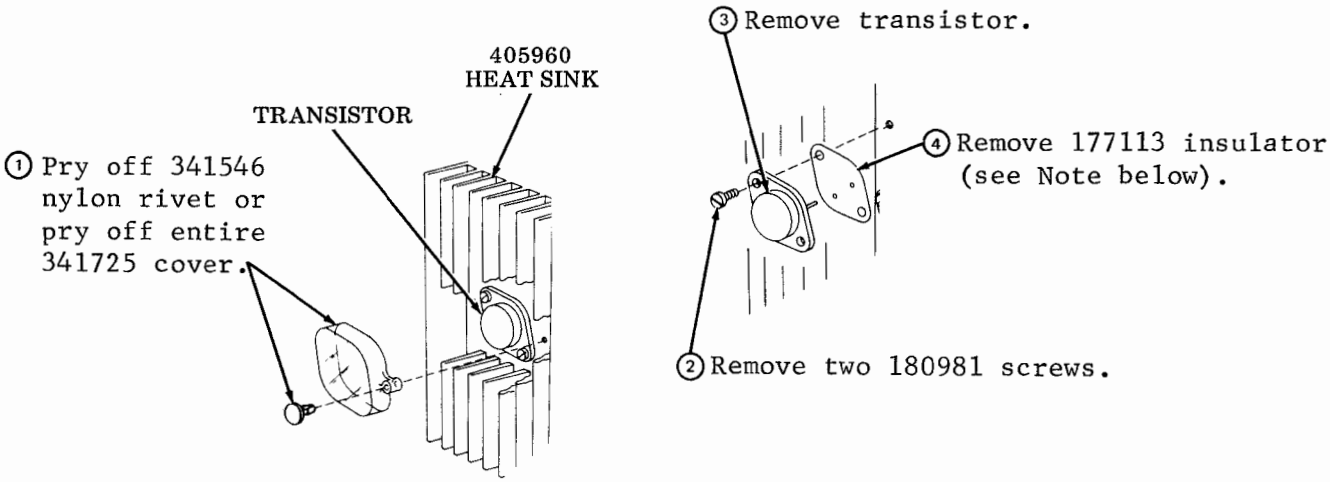

NOTE: Do not wipe off 402640 heat conducting paste from the 177113 insulator (orange color).

CAUTION: IF THE 405960 HEAT SINK IS REMOVED, DO NOT OVERTIGHTEN THE TWO 341657 SELF-TAPPING NUTS WHEN REMOUNTING THE HEAT SINK TO THE 407416 FRAME.

D. KEYBOARD-DISPLAY AMPLIFIER (Cont)

3. DISASSEMBLY/REASSEMBLY AND PARTS (Cont)

Parts

40KDA101

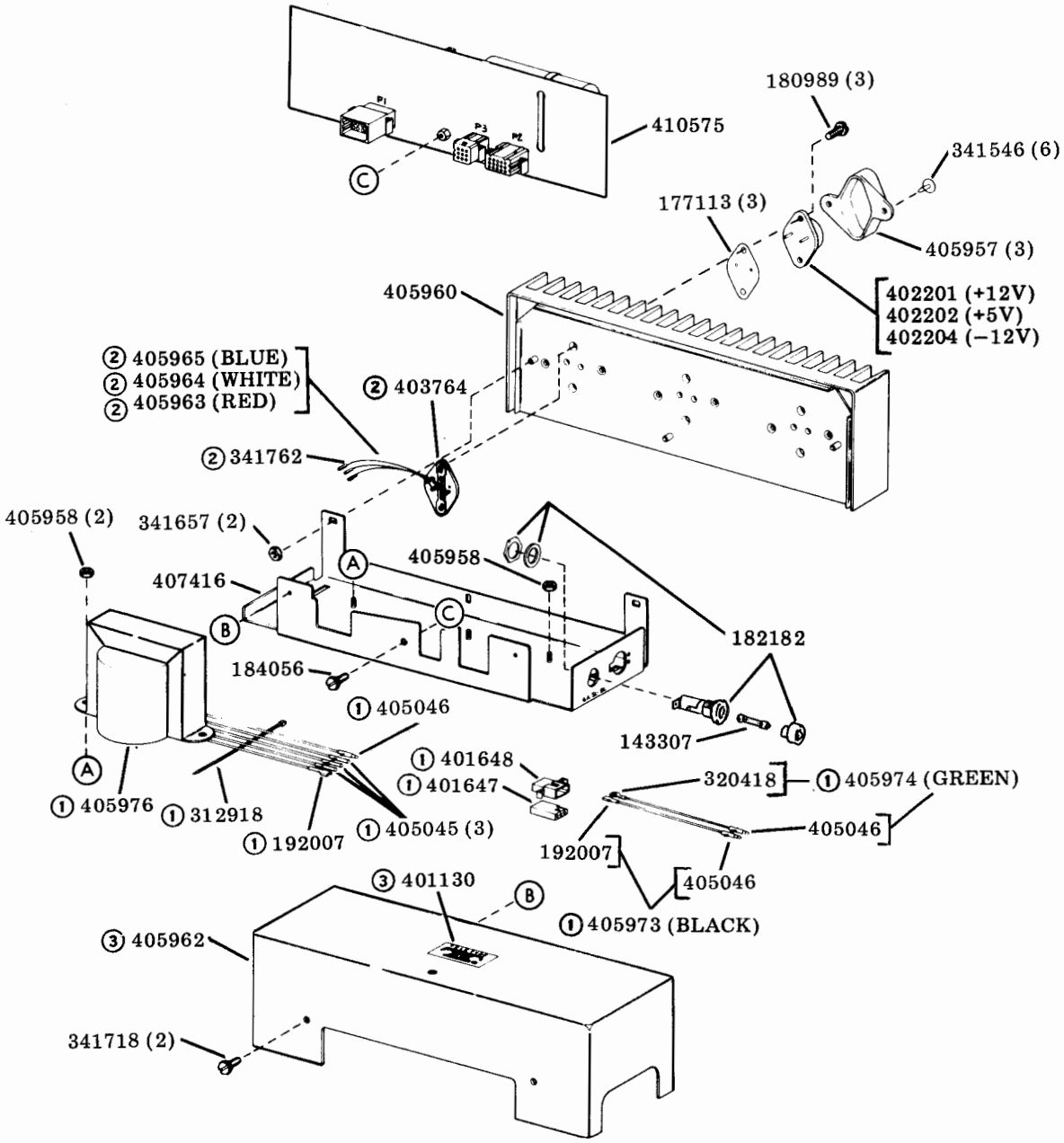

( ) Numbers in parentheses are quantities.

① 405977 TRANSFORMER ASSEMBLY

② 405966 SOCKET ASSEMBLY

③ 407417 COVER

405982 Modification Kit (In-Line Mounting)

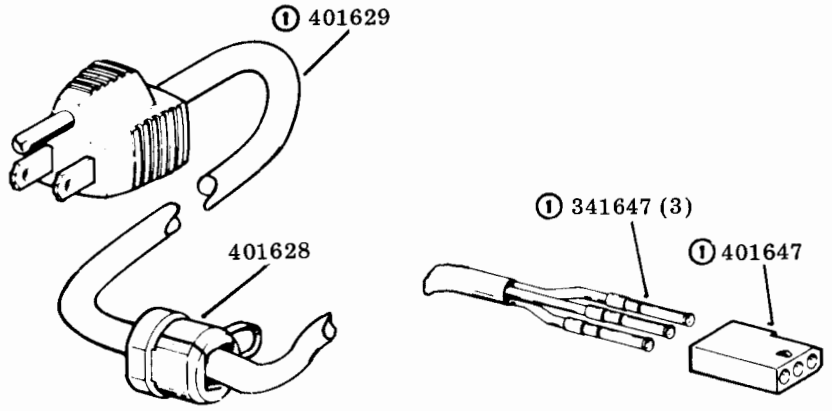

① 405967 AC Cord Assembly

405983 Modification Kit (Cabinet Mounting)

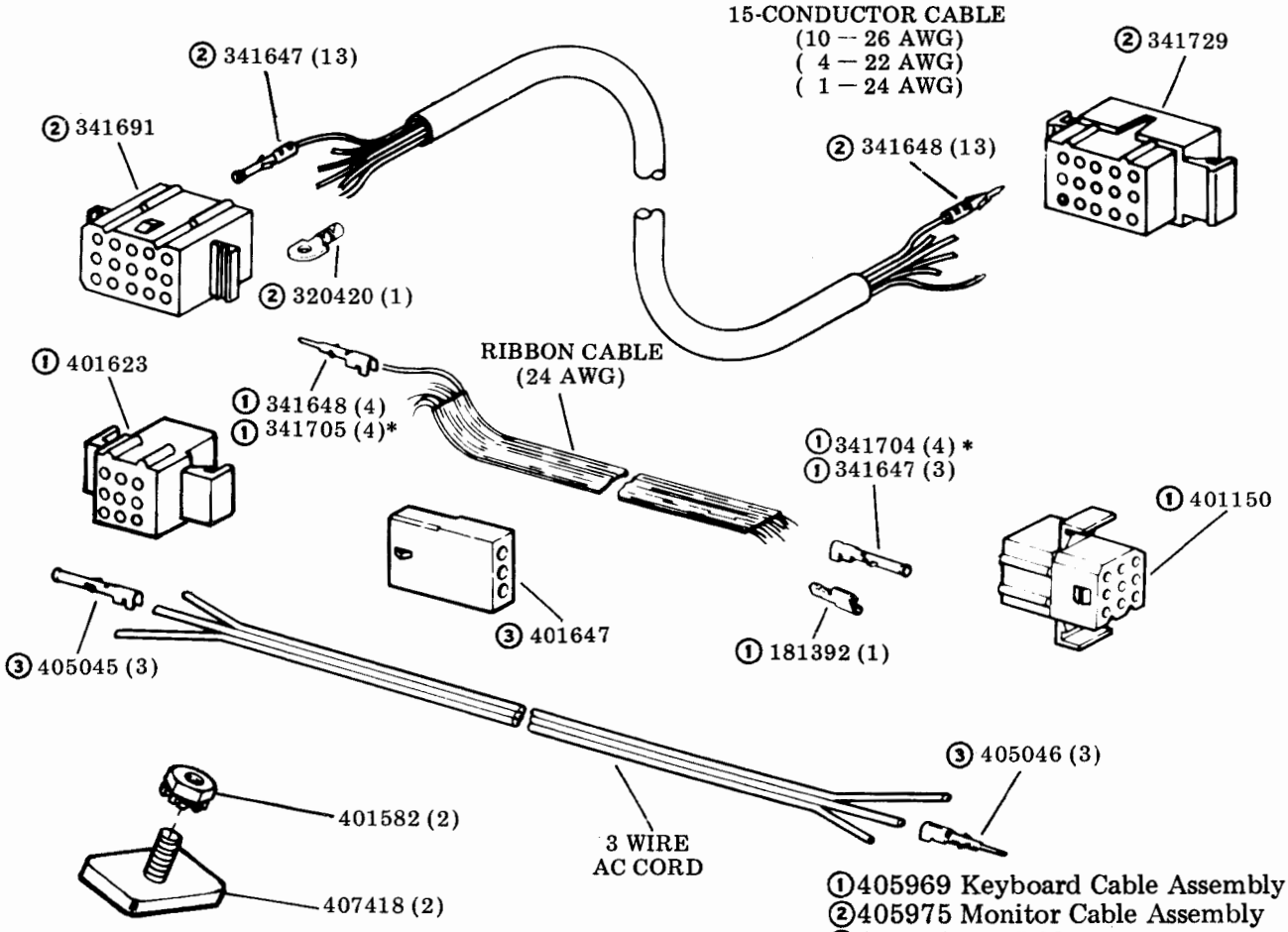

①405969 Keyboard Cable Assembly
②405975 Monitor Cable Assembly
③405961 AC Cable Assembly
*Used on R, Y, G, and O Wires.
( ) Numbers in parentheses are quantities.

D. KEYBOARD-DISPLAY AMPLIFIER (Cont)

3. DISASSEMBLY/REASSEMBLY AND PARTS, Parts (Cont)

405390 Cable Termination Box (24-Position)

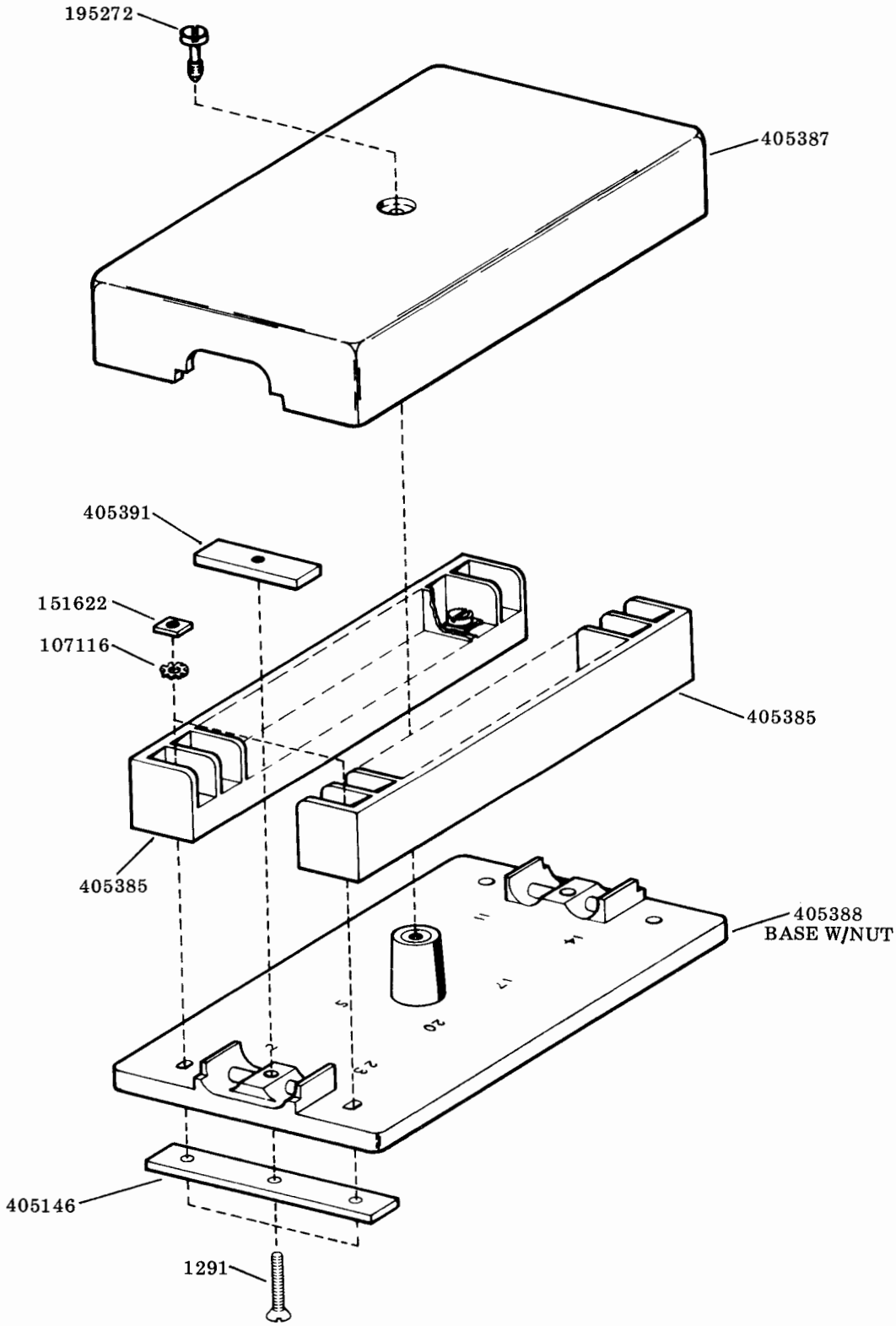

KDA to KD Cable Assemblies

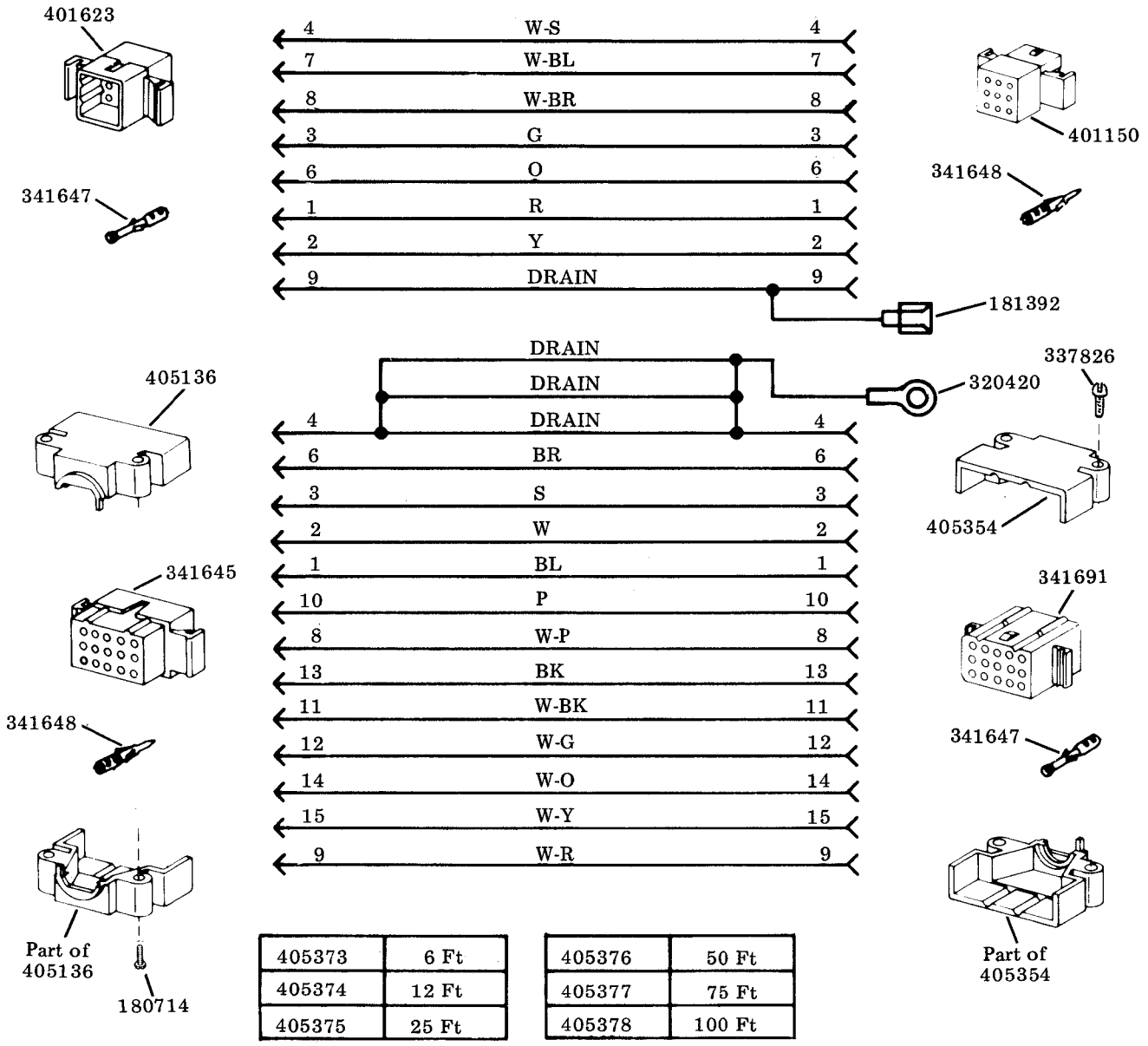

405373	6 Ft
405374	12 Ft
405375	25 Ft

405376	50 Ft
405377	75 Ft
405378	100 Ft

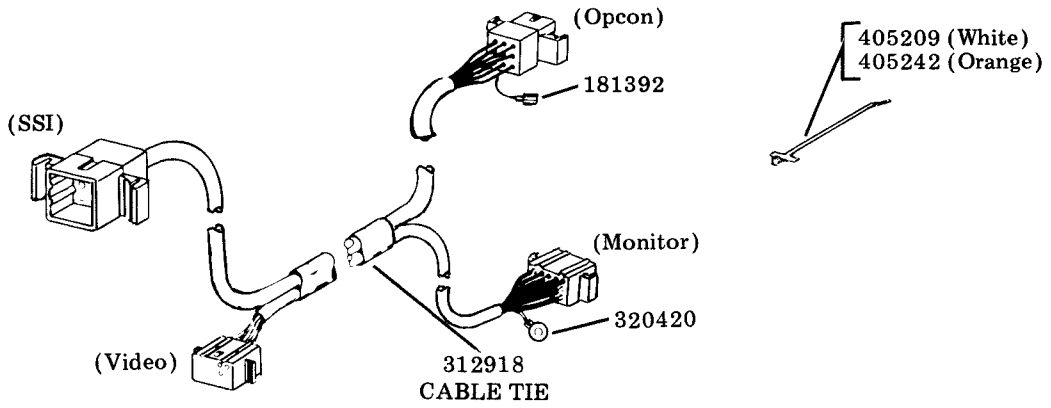

D. KEYBOARD-DISPLAY AMPLIFIER (Cont)

3. DISASSEMBLY/REASSEMBLY AND PARTS, Parts (Cont)

405372 Stub Cable Assembly

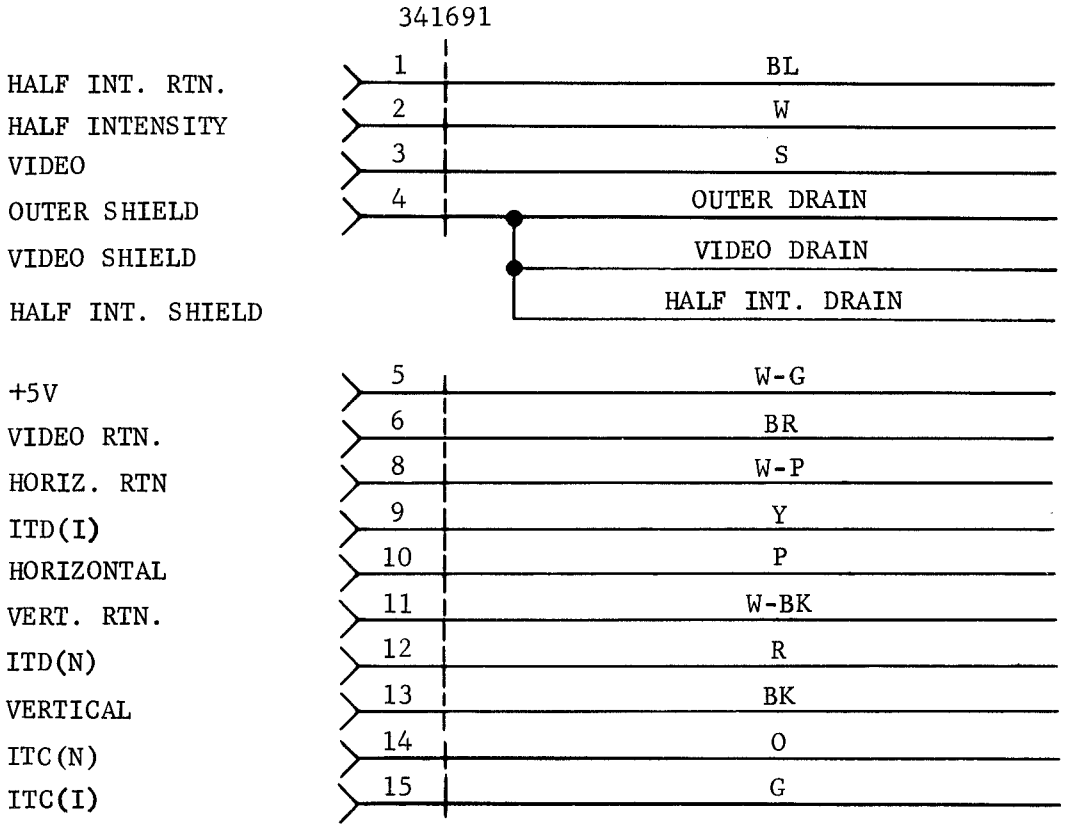

ACTUAL WIRING

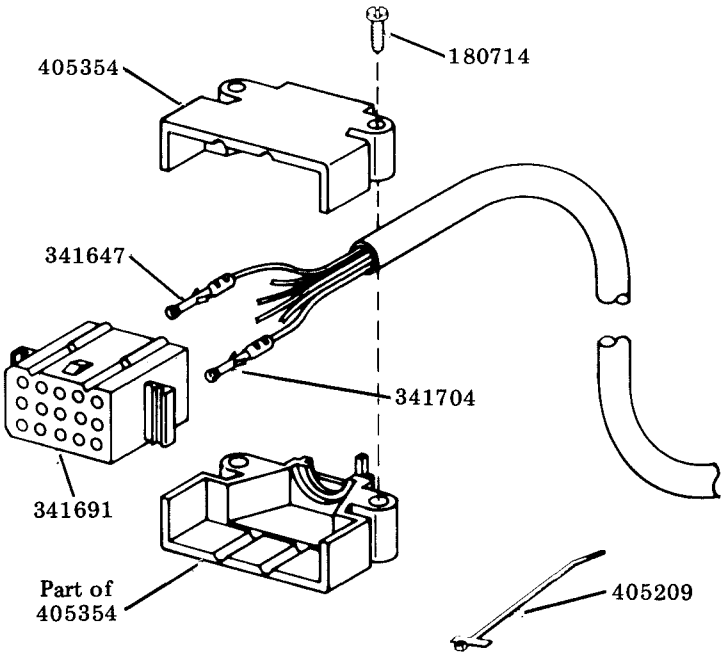

NOTE: When ordering replaceable components, prefix each part number with the letters "TP" (ie, TP143307).

PART NO.	DESCRIPTION AND PAGE NO.
1291	Screw, 6-32 x 3/4 Flat 58
107116	Lockwasher 58
143307	Fuse, .6 Amp 56
151622	Nut, 6-32 Sq 58
177113	Insulator 56
180714	Screw, #6 Self-Tapping 59,60
180989	Screw, #6 Spl 56
181392	Terminal, Tab Type 57,59
182182	Holder, Fuse 56
184056	Screw w/Lockwasher, 6-40 x 1/4 Hex 56
192007	Terminal, Tab Type 56
195272	Screw, 6-40 Spl 58
312918	Strap 56,59
320418	Terminal, Ring Type 56
320420	Terminal, Ring Type 57,59
337826	Screw, 1/2" Pan Hd 59
341546	Fastener, Drive 56
341645	Connector, 15 Pt Receptacle 59
341647	Terminal, Receptacle Type 57,59,60
341648	Terminal, Receptacle Type 57,59
341657	Nut, Self-Tapping 56
341691	Connector, 15 Pt Receptacle 57,59,60
341704	Terminal, Receptacle Type 57,60
341705	Terminal, Plug Type 57
341718	Screw w/Lockwasher, 6-40 x 5/16 Hex 56
341729	Connector, 15 Pt Plug 57
341762	Terminal, Receptacle Type 56
401130	Plate 56
401150	Connector, 9 Pt Receptacle 57,59
401582	Nut w/Lockwasher, 8-32 Hex 57
401623	Connector, 9 Pt Plug 57,59
401628	Bushing 57
401629	Cord w/Plug 57
401647	Connector, 3 Pt Receptacle 56,57
401648	Connector, 3 Pt Plug 56
402201	Regulator 56
402202	Regulator 56
402204	Regulator 56
403764	Socket 56
405045	Terminal, Receptacle Type 56,57
405046	Terminal, Plug Type 56,57
405136	Relief, Strain 59
405146	Stiffener 58
405209	Strap 59,60
405242	Strap 59
405354	Relief, Strain 59,60
405372	Cable Assembly 60
405373	Cable Assembly 59
405374	Cable Assembly 59
405375	Cable Assembly 59
405376	Cable Assembly 59
405377	Cable Assembly 59
405378	Cable Assembly 59
405385	Block, Terminal 58
405387	Cover 58
405388	Base w/Nut 58
405390	Box 58
405391	Clamp 58
405957	Cover 56
405958	Nut w/Lockwasher 56
405960	Sink, Heat 56
405961	Cable Assembly 57
405962	Cover 56
405963	Lead, Red 56
405964	Lead, White 56
405965	Lead, White 56
405966	Socket Assembly 56
405967	Cord Assembly, Power 57
405969	Cable Assembly 57
405973	Lead w/Terminal, Black 56
405974	Lead w/Terminal, Green 56
405975	Cable Assembly 57
405976	Transformer 56
405977	Transformer Assembly 56
405982	Modification Kit 57
405983	Modification Kit 57
407416	Frame 56
407417	Cover 56
407418	Bracket w/Stud 57
410575	Card, Circuit 56

E. EIA DATA TERMINAL SWITCH ASSEMBLY

1. TESTING

General

Testing the EIA switch assembly consists of going into pushbutton selected mode and then performing a series of continuity checks pertinent to the mode selected. The continuity checks, listed in tabular form, are made between terminals of the seven connectors located at the rear of the assembly. Connectors and their pins are designated as P1-8, where P1 is the connector and 8 is the pin number.

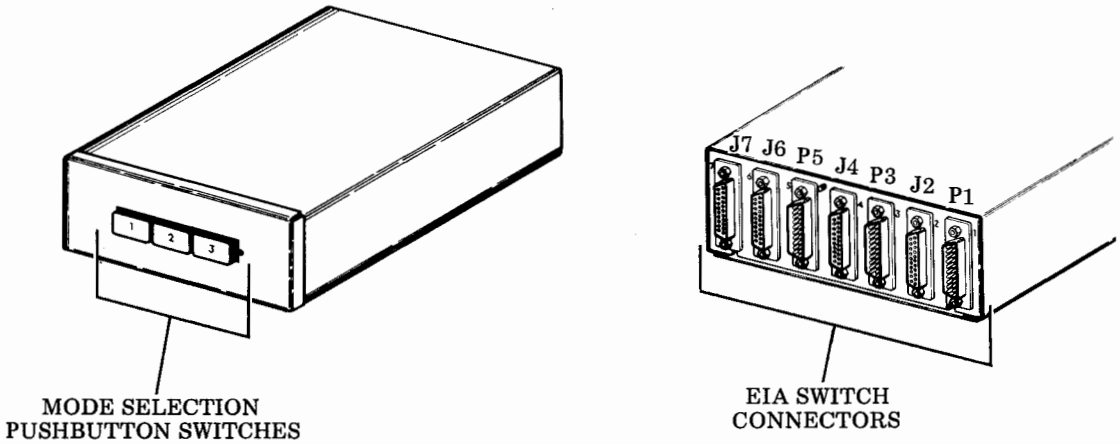

Continuity checks should be made with an ohmmeter in lieu of a lamp-type indicator to verify that continuity readings are essentially zero ohms. Readings other than zero ohms, except where indicated, or erratic readings may be the result of defective solder joints, loose wiring, corroded connector terminals and dirty or otherwise defective switch contacts. These types of defects could create hard to find problems when the EIA switch assembly is incorporated into a Model 40 station.

When a particular continuity check fails, refer to Trouble Analysis and/or Diagrams of D. 2. TROUBLESHOOTING for information on locating the failure point. After a problem has been located and repaired, continue with the continuity checks.

Miscellaneous Continuity Checks

a. Check that continuity is present between pins 11 and 19 of each connector.
b. Pin 1 of each connector should have continuity to the connector mounting frame.
c. Pin 7 of all connectors should have continuity to each other.
d. Connect the ohmmeter plus (+) probe to P1-20 and the minus (-) probe to P1-7. The ohmmeter should read very high (0.1 megohm or higher). An appreciably lower reading indicates a defective 10 MFD, 50 V capacitor.
e. Operate Mode Switch 2 and check resistance between P5-22 and J6-25. The ohmmeter should read between 2565 and 2835 ohms. A reading outside these limits indicates a defective 348009 resistor assembly or defective wiring.

Mode 1 Continuity Checks

Operate Mode Switch 1 and check continuity as follows:

FROM	TO
J2-20	J2-8
J2-8	J2-6
J2-4	J2-5
J7-20	J7-8
J7-8	J7-6
J7-4	J7-5
J2-11	J7-12
J2-19	J7-12
J2-12	J7-11
J2-12	J7-19
J2-2	J7-3

FROM	TO
J2-3	J7-2
J2-22	J7-22
P1-20	J4-20
P1-8	J4-8
P1-6	J4-6
P1-4	J4-4
P1-5	J4-5
P1-11	J4-11
P1-12	J4-12
P1-2	J4-2
P1-3	J4-3

FROM	TO
P1-22	J4-22
P5-20	J6-20
P5-8	J6-8
P5-6	J6-6
P5-4	J6-4
P5-5	J6-5
P5-11	J6-11
P5-12	J6-12
P5-2	J6-2
P5-3	J6-3
P5-22	J6-22

Mode 2 Continuity Checks

Operate Mode Switch 2 and check continuity as follows:

FROM	TO
P1-20	J6-20
P1-8	J6-8
P1-6	J6-6
P1-4	J6-4
P1-5	J6-5
P1-11	J6-11
P1-12	J6-12

FROM	TO
P1-2	J6-2
P1-3	J6-3
P1-22	J6-22
P3-20	J4-20
P3-8	J4-8
P3-6	J4-6
P3-4	J4-4

FROM	TO
P3-5	J4-5
P3-11	J4-11
P3-12	J4-12
P3-2	J4-2
P3-3	J4-3
P3-22	J4-22
P3-23	J4-23

Mode 3 Continuity Checks

Operate Mode Switch 3 and check continuity as follows:

FROM	TO
P1-20	J2-20
P1-8	J2-8
P1-6	J2-6
P1-4	J2-4
P1-5	J2-5
P1-11	J2-11
P1-12	J2-12
P1-2	J2-2
P1-3	J2-3
P1-22	J2-22

NOTE: In Mode 3, P5 has continuity to P6 as in Mode 1, and P3 has continuity to P4 as in Mode 2. It is not necessary to recheck these connector-to-connector paths.

E. EIA DATA TERMINAL SWITCH ASSEMBLY (Cont)

2. TROUBLESHOOTING

Trouble Analysis

To analyze a continuity check failure, the diagrams should be consulted to determine which wiring terminals are involved in the particular circuit path. A quick visual check of the terminals and related wiring may disclose the fault. If not, one ohmmeter probe may be held on a starting point and the other probe progressively moved from terminal to terminal until continuity is found. The fault should lay between the first point found open and the last point having continuity.

For example, assume there is a Mode 1 failure between P5-20 and J6-20. The schematic of this particular path, derived from Page 11-65, is shown below.

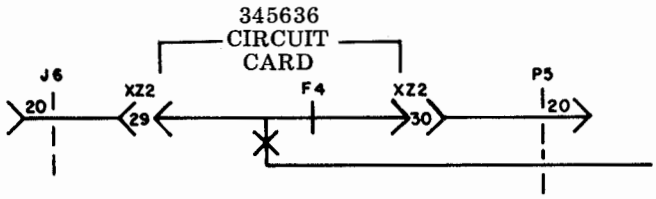

Hold one ohmmeter probe on P5-20. Put the other probe on XZ2-30. If no continuity, check wiring between P5-20 and XZ2-30. If continuity OK, move probe to XZ2-29. If no continuity, the problem very likely is in the 345636 circuit card. Remove the card and put both ohmmeter probes on the circuit card terminals corresponding to XZ2-29, 30. If no continuity, clean the switch contacts (337449 Freon degreaser), operating and releasing Mode Switch 1 several times while cleaning. Recheck switch continuity with Mode Switch 1 operated. If OK, replace circuit card and recheck between P5-20 and J6-20. If the circuit card switch contact problems could not be corrected, replace the circuit card.

EIA Switch Assembly Schematic

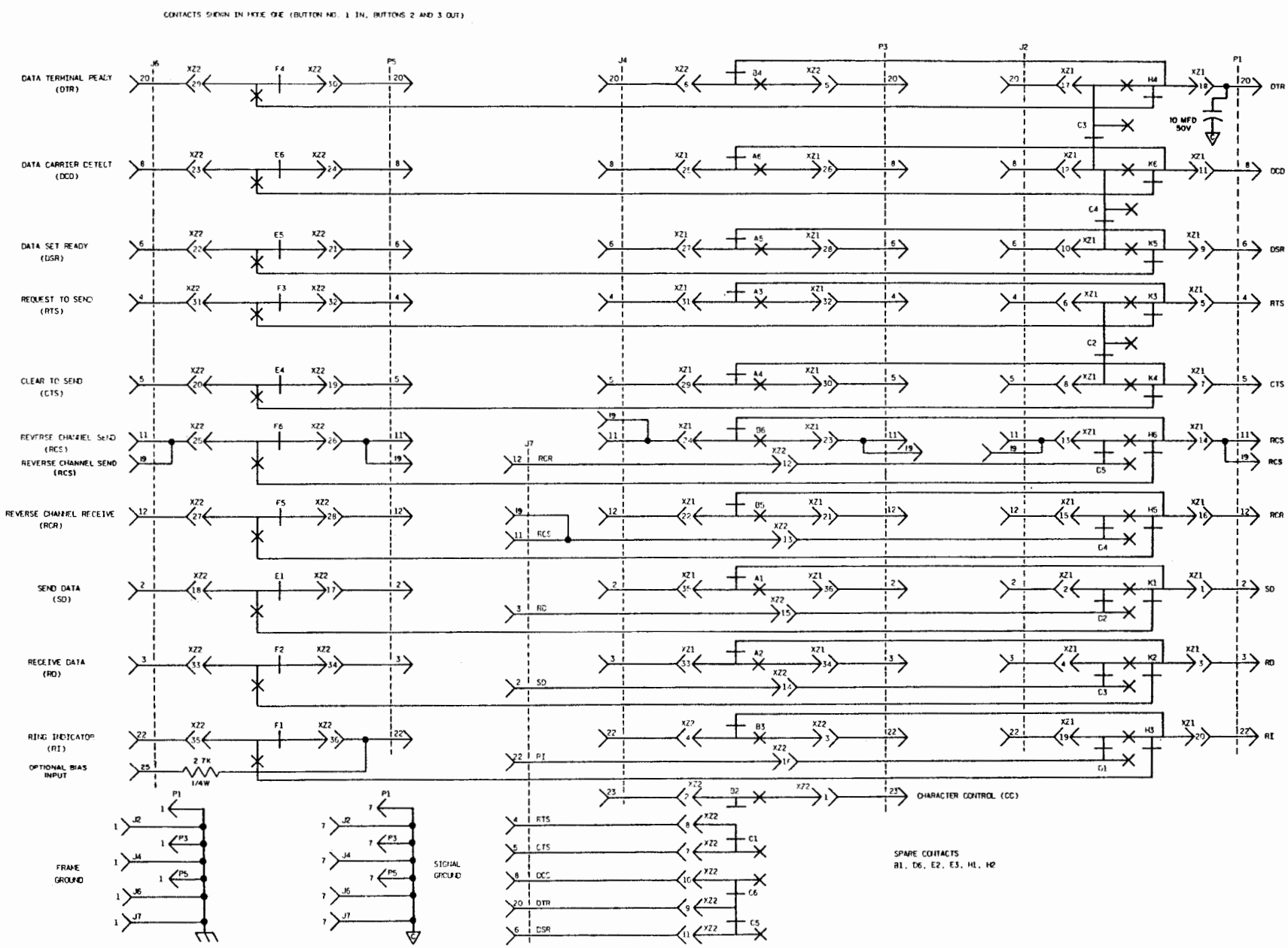

E. EIA DATA TERMINAL SWITCH ASSEMBLY (Cont)

2. TROUBLESHOOTING, Diagrams (Cont)

345636 Circuit Card

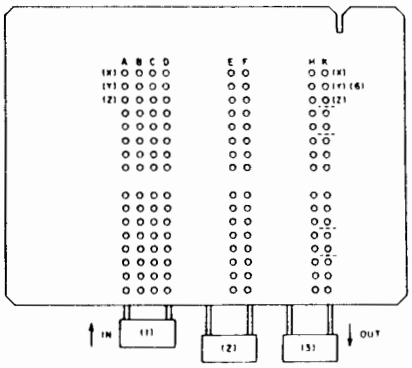

Switch Terminal Arrangement

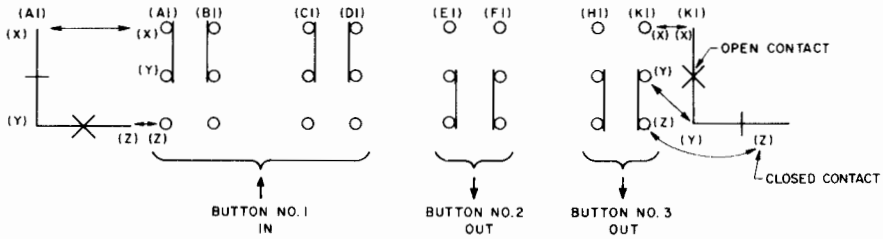

Schematic

Connector Terminal Arrangement (Wiring Side)

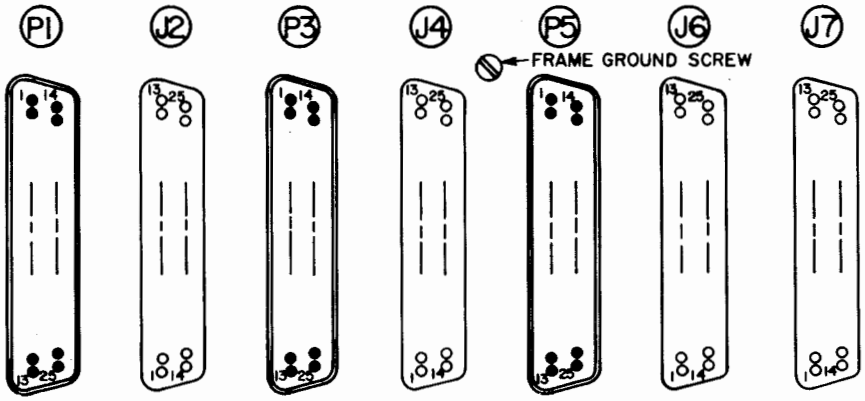

Connectors P1, P3 and P5 are Part No. 341977.
Connectors J2, J4, J6 and J7 are Part No. 341978.

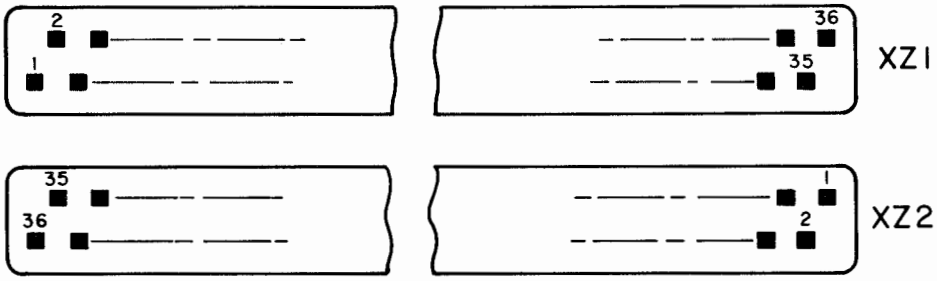

148440 Circuit Card Connectors

EIA Switch Assembly Wiring Diagram

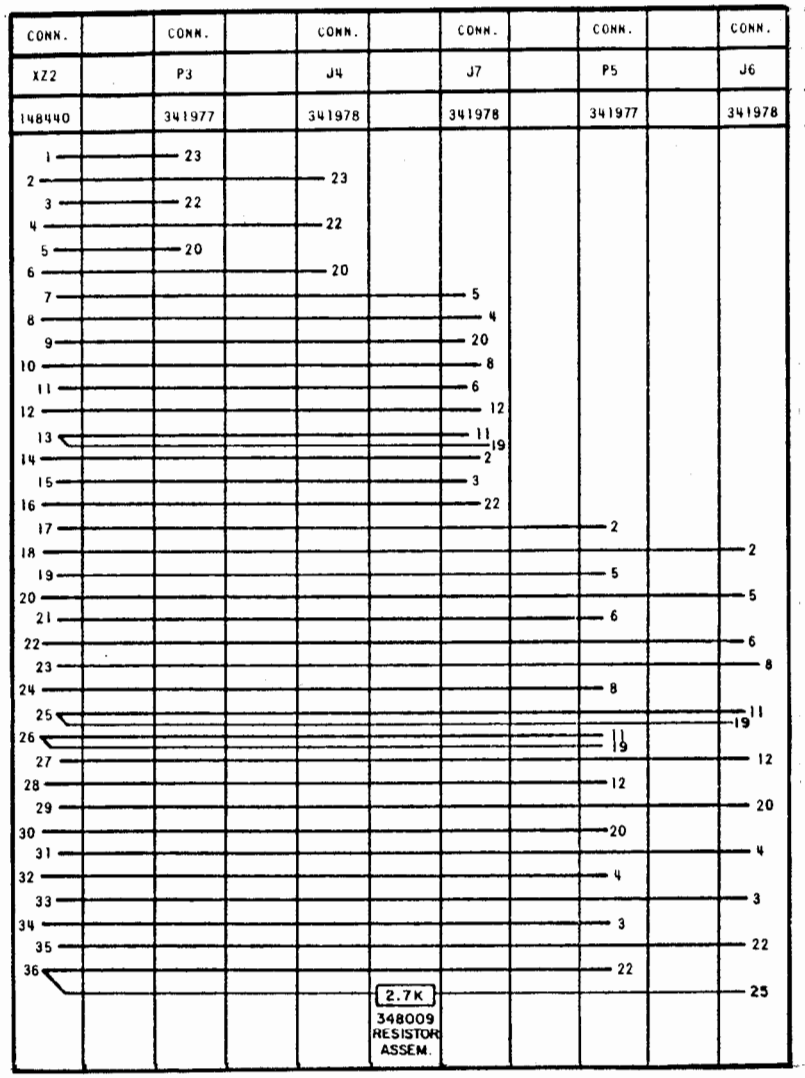

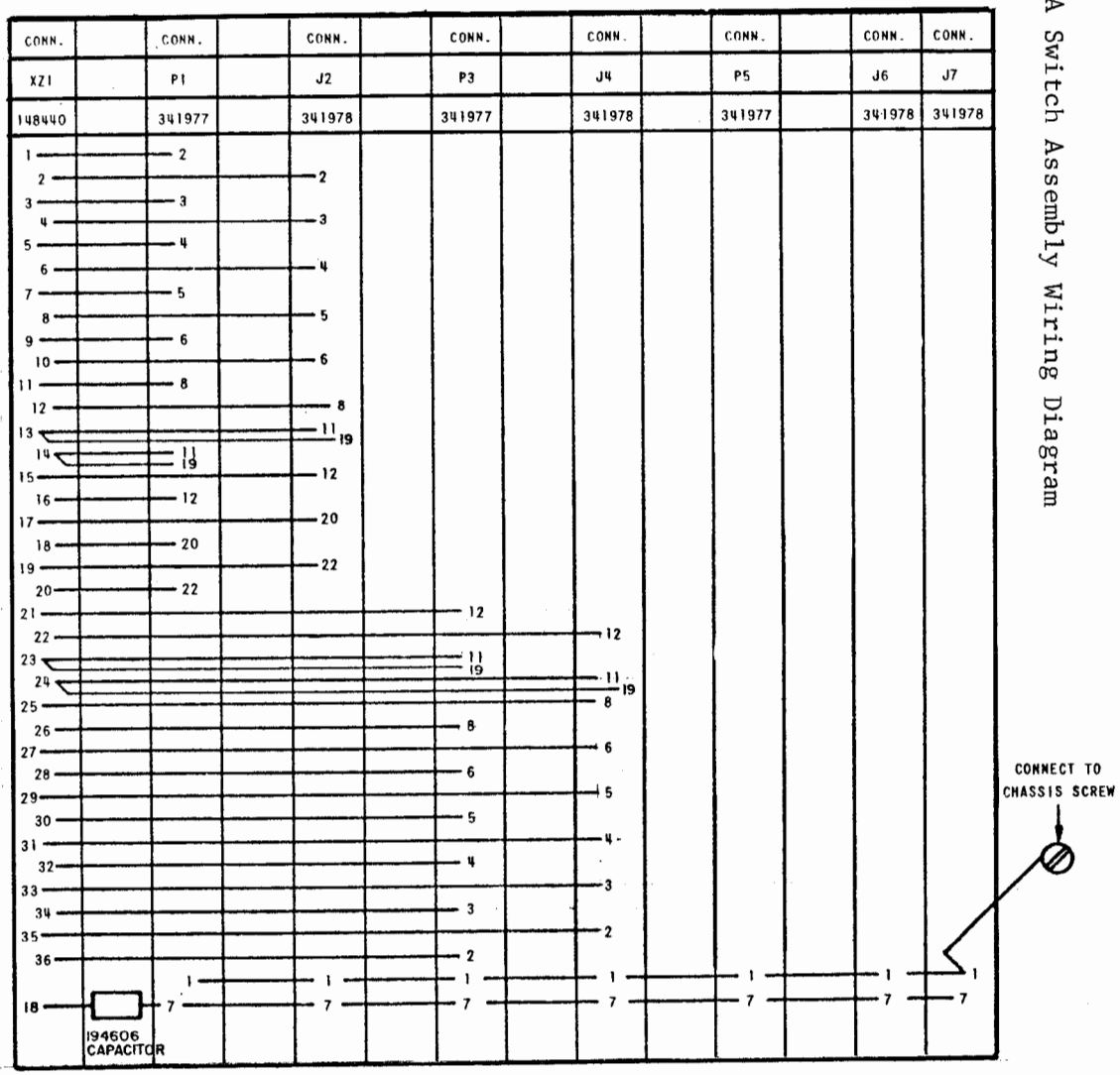

All wiring is 24 AWG.

Use 345675 wire assembly (red-slate) for "P" connectors.

Use 345676 wire assembly (red-slate) for "J" connectors.

Use 345677 wire assembly (red-slate)

Use 345677 wire assembly (green for pin 1 strapping.

Use 345678 wire assembly (white) for pin 7 strapping.

E. EIA DATA TERMINAL SWITCH ASSEMBLY (Cont)

3. DISASSEMBLY/REASSEMBLY AND PARTS

Disassembly/Reassembly

The disassembly or reassembly procedure is straight forward and involves only the use of standard tools. When removing a subassembly or part from the unit, follow the removal procedures and note how each part is removed and the sequence of its removal. For reassembly, reverse the removal procedure.

Precautions should be taken to assure that the unit is disassembled and reassembled under clean conditions. No oil, grease or other liquids should be allowed on unassembled parts, subassemblies or the complete unit.

Remove the eight mounting screws securing the bottom plate to the switch box.

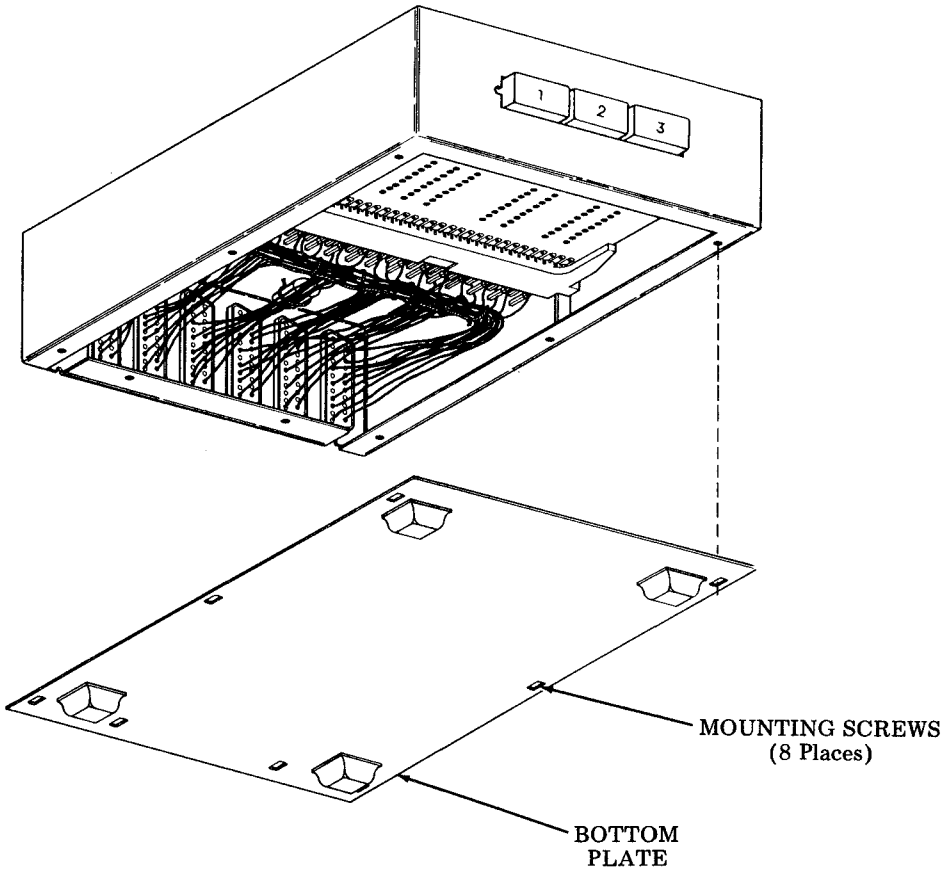

Remove the box by sliding the electronic package out of the receptacle end.

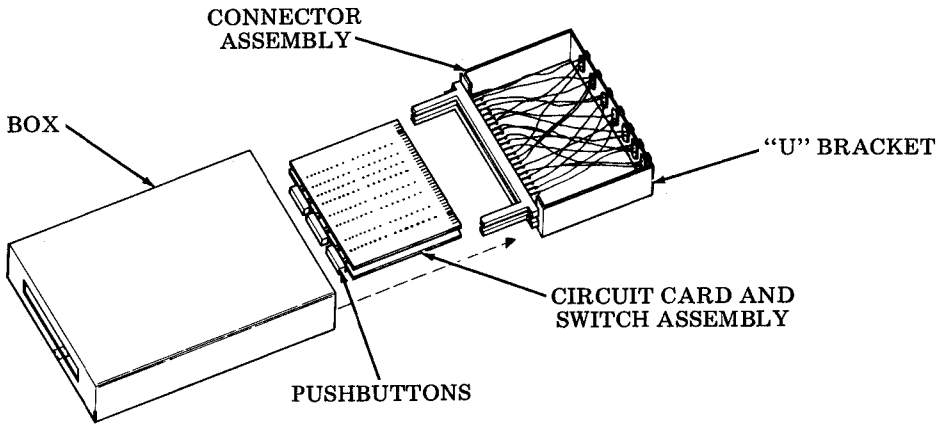

The circuit card and switch assembly may be separated from the connector assembly by grasping the circuit cards at the pushbutton end with one hand and grasping the "U" bracket with the other hand and pulling the circuit cards carefully out of the circuit card connectors. The 345636 circuit card and switch assembly are ordinarily replaced rather than repaired as disassembly by normal tools and methods is not practical.

If circuit card connectors or EIA connectors are damaged and must be replaced, caution must be exercised in handling the wire leads so they do not break and that they are connected to the correct pin when resoldered. Replacement wires should be the same gauge (24 AWG) and color as the wires being replaced.

E. EIA DATA TERMINAL SWITCH ASSEMBLY (Cont)

3. DISASSEMBLY/REASSEMBLY AND PARTS

Parts

345630 EIA Switch Assembly Components

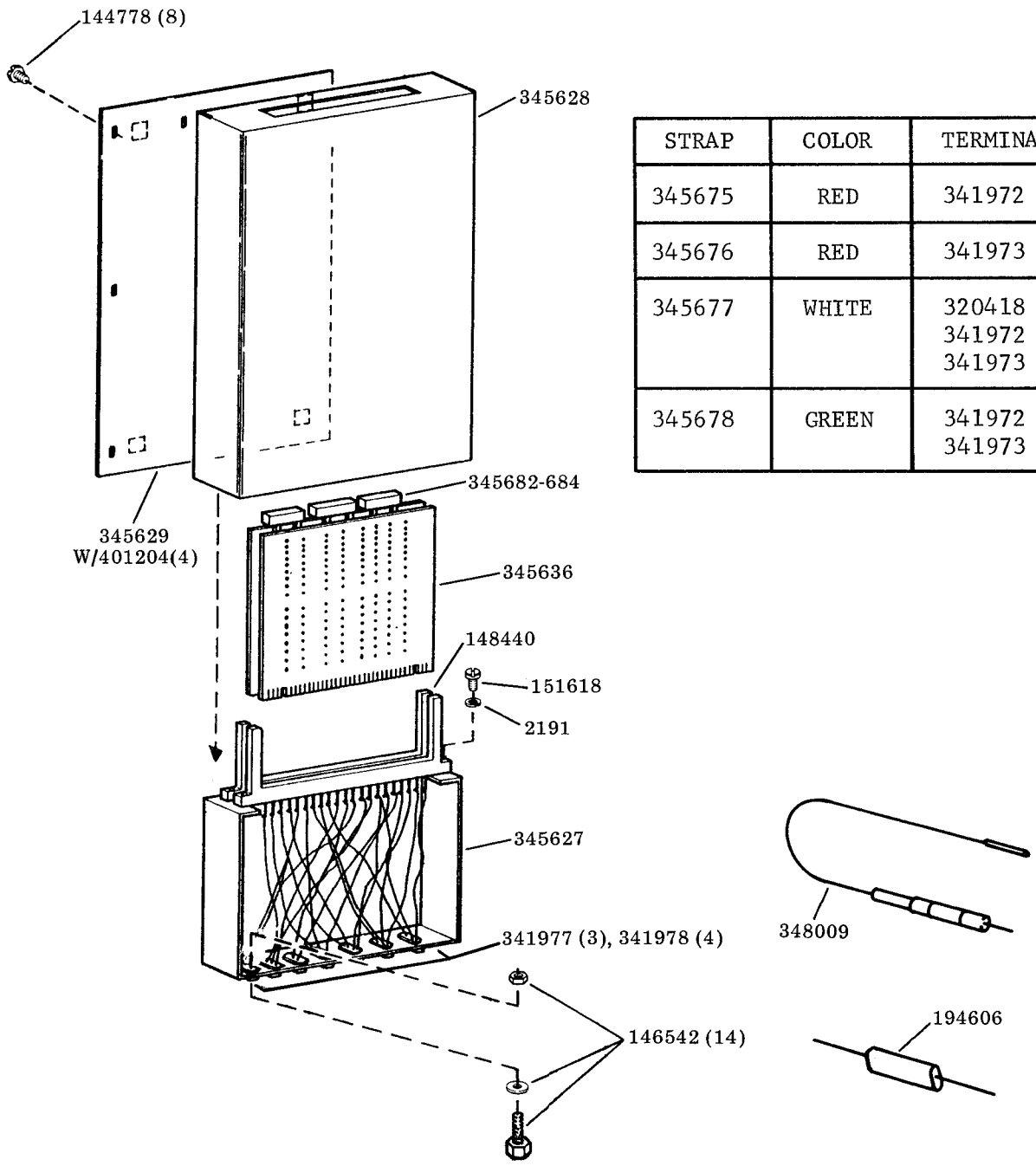

STRAP	COLOR	TERMINALS
345675	RED	341972 (1)
345676	RED	341973 (1)
345677	WHITE	320418 (1) 341972 (3) 341973 (4)
345678	GREEN	341972 (3) 341973 (4)

341896 EIA Data Set Cable Assembly (Included With EIA Switch Assembly)

341977 CONNECTOR		341978 CONNECTOR
1	BK	1
2	BR	2
3	R	3
4	O	4
5	Y	5
6	G	6
7	BL	7
8	P	8
11	S	11
12	W	12
15	W-BK	15
17	W-BR	17
20	W-R	20
22	W-O	22
23	W-Y	23

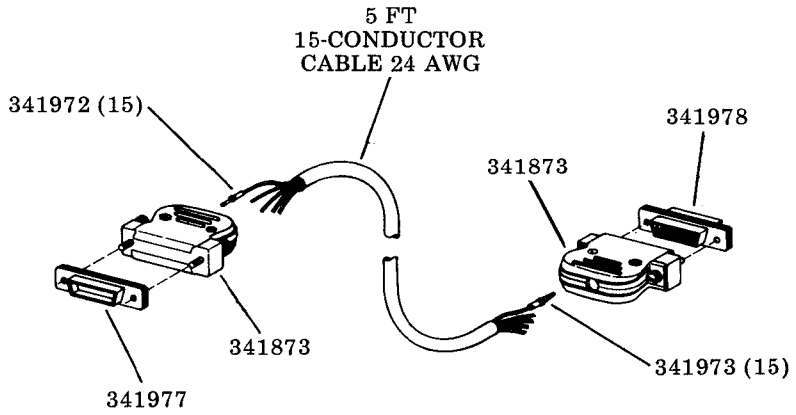

E. EIA DATA TERMINAL SWITCH ASSEMBLY (Cont)

3. DISASSEMBLY/REASSEMBLY AND PARTS, Parts (Cont)

PART NO.	DESCRIPTION AND PAGE NO.
2191	Lockwasher 70
144778	Screw, #6 Self-Tapping 70
146542	Post Assembly 70
148440	Connector, 36 Pt Circuit Card 70
151618	Screw, 6-40 x 7/16 Fil 70
194606	Capacitor, 10 MFD 70
341873	Hood, Cable Connector 71
341896	Cable Assembly 71
341972	Pin, Contact 70,71
341973	Socket, Contact 70,71
341977	Connector, 25 Pt Receptacle 70,71
341978	Connector, 25 Pt Plug 70,71

PART NO.	DESCRIPTION AND PAGE NO.
345627	Bracket 70
345628	Enclosure 70
345629	Plate 70
345630	Switch Assembly 70
345636	Card, Circuit 70
345675	Strap 70
345676	Strap 70
345677	Strap 70
345678	Strap 70
345682 Thru 345684	Button, Control 70
348009	Resistor Assembly 70
401204	Bumper 70