INSTALLATION & SERVICING

model 40

MANUAL 347

MANUAL 347
Issue 3, November 1976

MODEL 40

INSTALLATION & SERVICING MANUAL

40/1
ASYNCHRONOUS
SWITCHED NETWORK
APPLICATION

40/2
ASYNCHRONOUS
SWITCHED NETWORK
TELETYPEWRITER
COMPATIBLE
APPLICATION

40/3
ASYNCHRONOUS
MULTI-POINT PRIVATE LINE
APPLICATION USING
9140 STATION CONTROLLER

GENERAL 1
INSTALLATION 2
OPERATIONAL CHECKOUT 3
TROUBLESHOOTING 4
WIRING DIAGRAMS 5
ADJUSTMENTS 6
COMPONENT ACCESS 7
ROUTINE MAINTENANCE 8
ACCESSORIES AND SUPPLIES 9

TELETYPE®

© 1973, 1975, and 1976 by Teletype Corporation
All rights reserved
Printed in U.S.A.

PART 1 — GENERAL

INDEX PAGE

A. INTRODUCTION 1

B. FEATURE AND OPTION RECORD 3

C. TECHNICAL DATA
1. POWER SOURCE REQUIREMENT 4
2. POWER CONSUMPTION AND HEAT DISSIPATION 5
3. ENVIRONMENTAL RESTRICTIONS 5
4. WEIGHT 5

D. SUPPLEMENTARY INFORMATION 6

E. TOOLS AND SUPPLIES
1. TOOLS 6
2. SUPPLIES 7
3. TEST EQUIPMENT 7

A. INTRODUCTION

This manual provides the Installation and Servicing information for the following Model 40 Terminals:

40/1 -- Asynchronous Switched Network Application

40/2 -- Asynchronous Switched Network Teletypewriter Compatible Application

40/3 -- Asynchronous Multipoint Private Line Applications Using 9140 Station Controller

Throughout the manual these terminals will be referred to simply as 40/1, 40/2 and 40/3.

This manual is for field repair only. Do not go beyond the repair indicated in this document. Shop level repair for the components is covered in Teletype Corporation Manual 352 and should be conducted at an appropriate repair location. Shop level repair for the printers and associated cabinets only is covered in Teletype Corporation Manual 355.

Safety Precautions:

CAUTION 1: CARE SHOULD BE EXERCISED IN THE AREA OF THE CRT PICTURE TUBE TO AVOID BREAKAGE WHEN SERVICING THE MONITOR WITH ITS COVER REMOVED. ALL POWER TO THE SET SHOULD BE TURNED OFF (AC POWER CORD DISCONNECTED) WHEN ANY COMPONENTS ARE REPLACED, HOWEVER, WHEN ALIGNMENT ADJUSTMENTS ARE PERFORMED, POWER MUST BE ON. IT IS RECOMMENDED THAT SAFETY GLASSES BE WORN WHENEVER THE MONITOR COVER IS REMOVED.

A. INTRODUCTION (Cont)

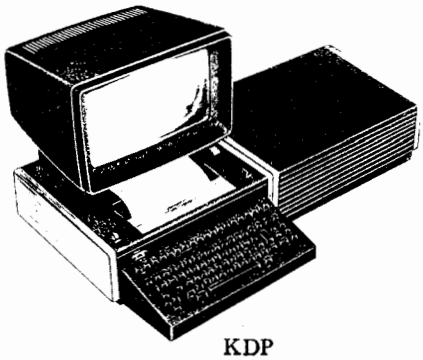

KDP
PRINTER UNDER MONITOR
FRICTION FEED
TABLE MODEL

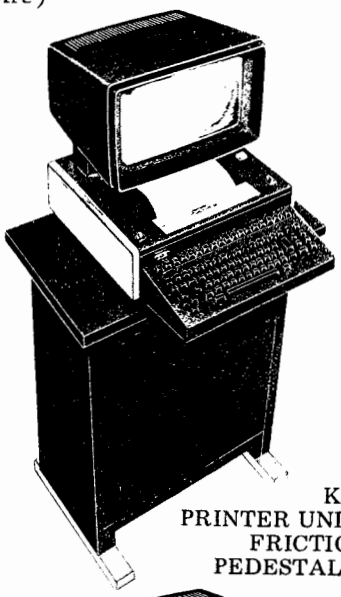

KDP
PRINTER UNDER MONITOR
FRICTION FEED
PEDESTAL MOUNTED

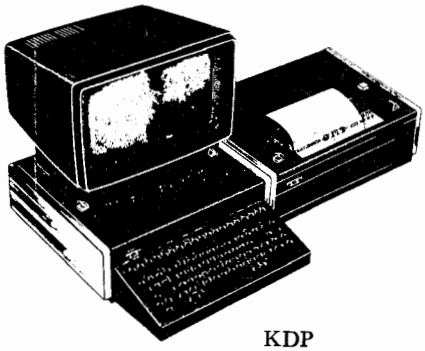

KDP
PRINTER ADJACENT
FRICTION FEED
TABLE MODEL

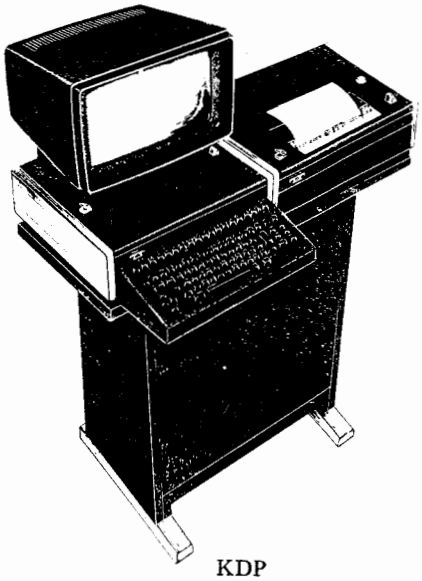

KDP
PRINTER ADJACENT
FRICTION FEED
1-PEDESTAL

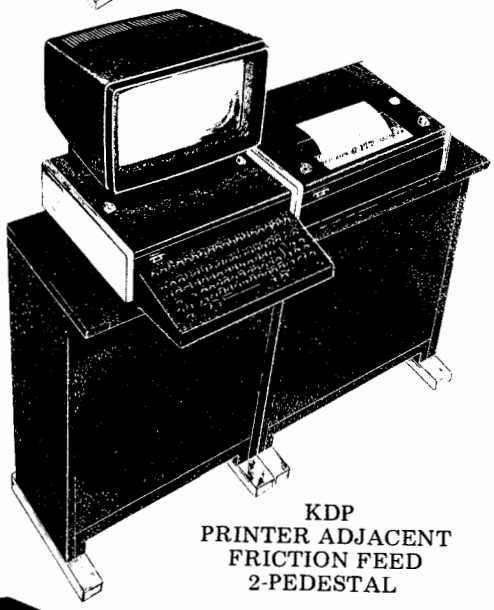

KDP
PRINTER ADJACENT
FRICTION FEED
2-PEDESTAL

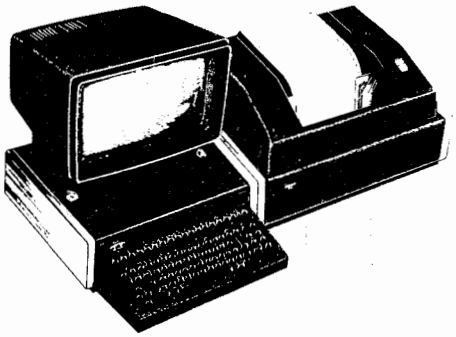

KDP
PRINTER ADJACENT
TRACTOR FEED
TABLE MODEL

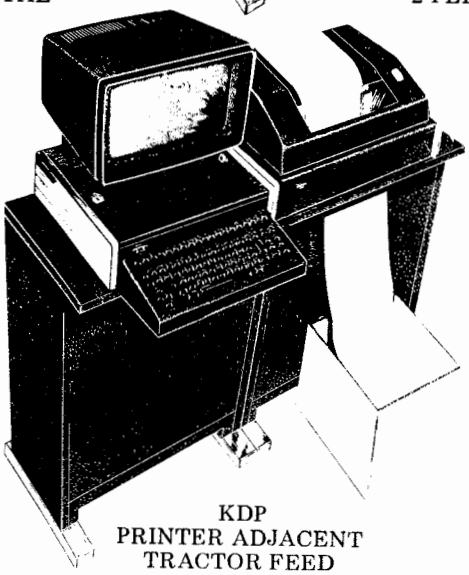

KDP
PRINTER ADJACENT
TRACTOR FEED
2-PEDESTAL

CAUTION 2: PERSONNEL WORKING WITH THE MODEL 40 MUST WEAR A STATIC PROTECTION GROUND STRAP WHEN HANDLING CIRCUIT CARDS WITH MOS DEVICES. THE STRAP MUST BE WORN SO AS TO MAKE FIRM CONTACT WITH THE SKIN AT ALL TIMES.

NOTE: Service personnel are never to be connected directly to ground but rather through a high resistance discharge path of a minimum of one megohm where 115 V ac is present.

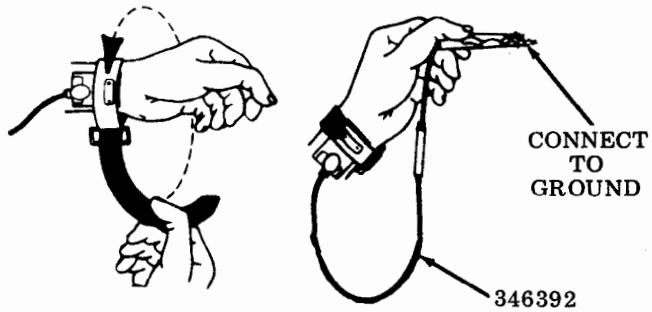

Cautions are presented throughout this manual, where appropriate. Field personnel should observe these cautions to avoid danger to himself and damage to the equipment.

Troubles isolated to the modem or data set, telephone lines, or associated systems are not analyzed in this manual.

Conversion information to change features in the field is not provided in this manual.

B. FEATURE AND OPTION RECORD

Before proceeding with installation, checkout or servicing, a review of the features and field options or other descriptions and records should be made to determine which options, if any, should be changed from the way they were furnished by the factory, applied at a service location, or altered during earlier service applications.

B. FEATURE AND OPTION RECORD (Cont)

The "Feature and Option" record (see Page 2-95) for the station should be maintained and attached to the equipment to facilitate checkout or operation.

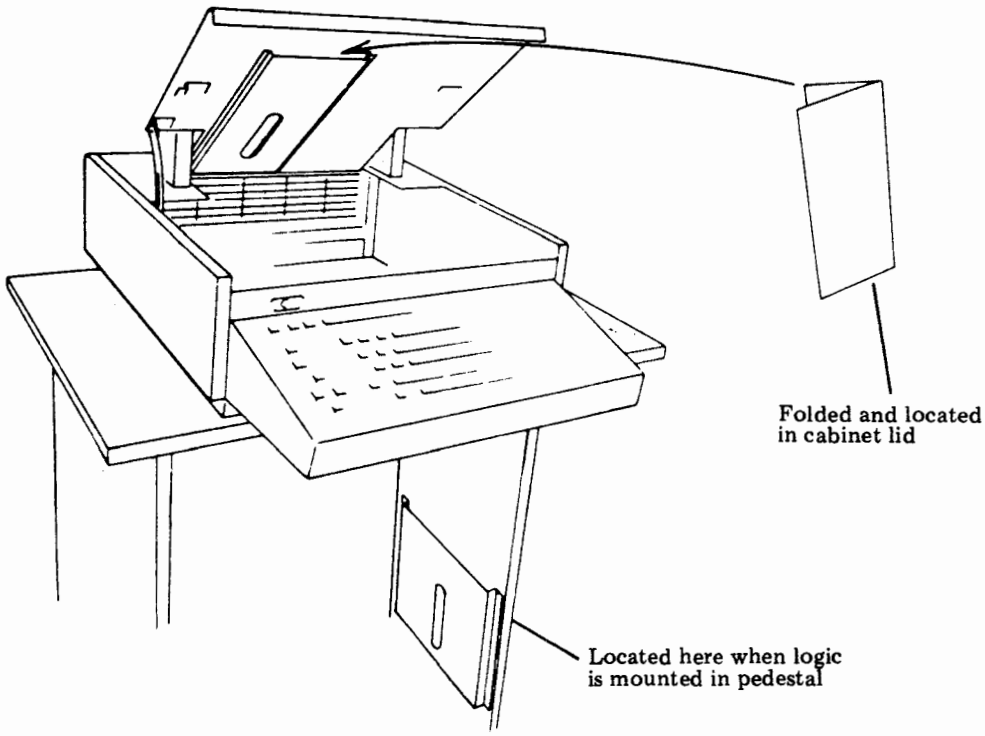

Conversion information to change features in the field is not provided in this manual except to convert replacement components when correcting a trouble by substitution, thereby retaining the original features in the repaired station. For information to add or change the features originally ordered refer to the Teletype Corporation Model 40 Catalog, modification kit specifications, or other instructions and make proper entries in the station feature and option record.

C. TECHNICAL DATA

1. POWER SOURCE REQUIREMENT

All Sets: 115 V ac ±10% 50 or 60 Hz ±0.5 Hz from an unswitched, standard 3-wire grounding type receptacle. Note special provisions required for 50 Hz operation in display monitor, printers, and belted fan assemblies associated with electronics module.

2. POWER CONSUMPTION AND HEAT DISSIPATION

	Power Consumption	Heat Dissipation	Approximate Current Draw
Switched Network Sets -- 40/1			
KDP	360 WATTS	1230 BTU/HR	4.5 AMPS
KD	260 WATTS	885 BTU/HR	2.7 AMPS
ROP	260 WATTS	885 BTU/HR	3.2 AMPS
TTY Compatible Sets -- 40/2			
KDP	360 WATTS	1230 BTU/HR	4.5 AMPS
KD	260 WATTS	885 BTU/HR	2.7 AMPS
ROP	260 WATTS	885 BTU/HR	3.2 AMPS
40/9140 Sets -- 40/3			
KDP	410 WATTS	1400 BTU/HR	5.3 AMPS
KD	310 WATTS	1050 BTU/HR	3.5 AMPS
ROP	310 WATTS	1050 BTU/HR	4.0 AMPS

3. ENVIRONMENTAL RESTRICTIONS (Operating)

Ambient Temperature . . . . . +40°F to 110°F
Relative Humidity . . . . . 2% to 95° (noncondensing)

4. WEIGHT (Approximate)

Display Monitor With Housing . . . . . 42 lbs

Electronics Package . . . . . 50 lbs

Printer and Printer Logic:
80-Column Printer . . . . . 40 lbs
132-Column Printer . . . . . 56 lbs

Electronics Package Cabinet . . . . . 15 lbs

Printer Cabinet . . . . . 15 lbs

Operator Console . . . . . 5 lbs

Pedestal . . . . . 56 lbs

9140 Station Controller . . . . . 17 lbs

D. SUPPLEMENTARY INFORMATION

All Sets: Model 40 Shop Manual -- Manual 352
Model 40 Printer Shop Manual -- Manual 355 (provides information for 80- and 132-column printers and related cabinetry only).
How to Operate Manual -- Manual 346

E. TOOLS AND SUPPLIES

1. TOOLS

The following tools and supplies may be required for installation or servicing of Model 40 apparatus. Most of these items should normally be present in standard maintenance tool kits.

NOTE: When ordering replaceable components, unless otherwise specified, prefix each part number with the letters "TP" (ie, TP410055).

Description	Part No.
• Wrench 3/16 Inch Socket	125752
• Wrench, Open-End 3/8 Inch	125765
• Wrench, Open-End 3/16 and 1/4 Inch	129534
• Wrench, Open-End 5/16 and 3/8 Inch	152835
• Wrench, Open-End 3/4 Inch	129537
• Nut Driver Handle	135676
• Nut Driver 1/4 Inch	89954
• Nut Driver 5/16 Inch	89955
• Nut Driver 1/4 Inch	135677
• Nut Driver 5/16 Inch	135678
• Screwdriver 1/8, 2 Inch Blade	95368
• Screwdriver 1/4, 6 Inch Blade	100982
• Screwdriver (blade less than 5/32 inch)	94647
• Allen Wrench 0.062	124682
• Tweezers	151392
• Springhook (pull)	142554
• Springhook (pull)	75675
• Springhook (push)	75503
• Scale, 32 ounce	110444
• Scale, 64 ounce	82711
• Scales, spring (802)	110443
• Ruler, 6 Inch	95960
• Cleaning Brush (type face)	151394
• Long-Nose Pliers	108285
• Cutting Pliers	108286
• Terminal Extractor	182697
• Retaining Ring Pliers	160396
• Terminal Extractor	341983
• Keyswitch Extractor	346257
• Keytop Extractor	346260
• Gauge (Friction and Tractor Feed Printer)	402617

Description	Part No.
• Terminal Extractor (MOLEX HT 2285)	402840
• Static Ground Strap	346392
• Left Gauge	402716
• Right Gauge	402717
• Gauge	402868
• Type Pallet Gauge	402878

2. SUPPLIES

- Grease -- 143484 (Mobil No. 2 -- 1 lb can)
  145867 (Mobil No. 2 -- 4 oz tube)
  195298 (Beacon 325 -- 5 lb can)
- Oil -- 88970 (1 qt can)
- Ribbon -- 402444
- Paper (friction feed) -- standard 8-1/2 inch wide, 5 inch diameter roll
- Paper (tractor feed) -- for 80-column printer; for 132-column printer
- Degreaser (Freon TF) 337449 (6 oz aerosol can)

3. TEST EQUIPMENT

A test set which is useful in some trouble isolation procedures is the TSM-7810S Line Monitor Data Display which allows the user to see what is happening at the communication interface.

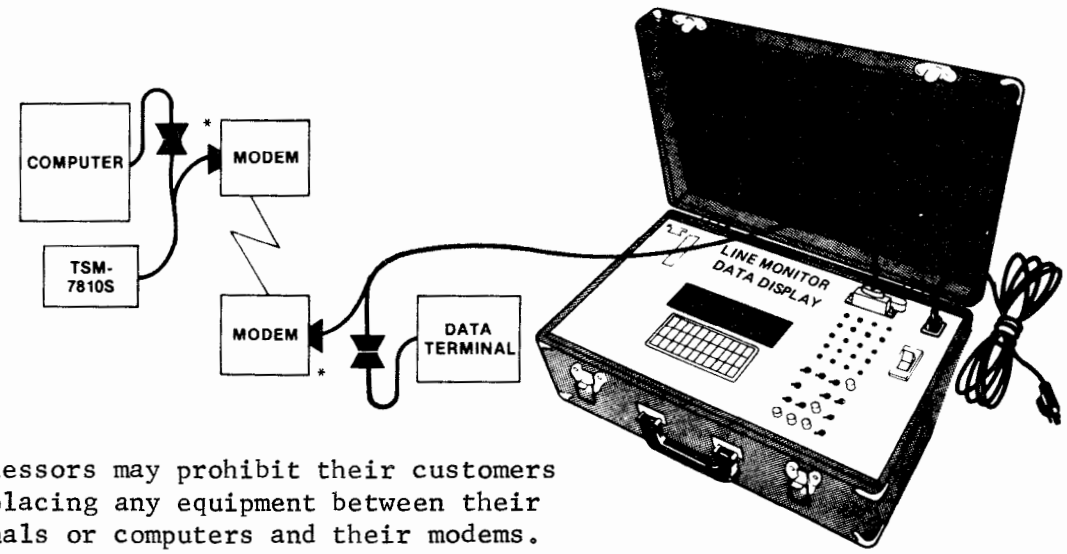

*Some lessors may prohibit their customers from placing any equipment between their terminals or computers and their modems.

The TSM-7810S may be purchased from Teletype Corporation. Teletype Service offers both a Testing Service and a Loan Service. The Loan Service provides use of the TSM-7810S; the Testing Service provides a product service representative equipped with the unit. For additional information on features and operation, refer to PART 9 -- ACCESSORIES.

FACTORY AUTHORIZED SERVICE FOR TELETYPE CORPORATION PRODUCTS

SERVICE CENTERS

NORTHEASTERN REGION: CONN., MAINE, MASS., N.H., UPSTATE N.Y., R.I., VT.		
*BOSTON	7 WALKUP DRIVE, P.O. BOX 566, WESTBORO, MA 01581	(617) 366-8881
SPRINGFIELD/ HARTFORD	SOUTHHAMPTON, MASS. 01073	(413) 739-9657
ROCHESTER	115 METRO PARKWAY, ROCHESTER, N.Y. 14623	(716) 442-8480
SYRACUSE	5858 E. MOLLOY RD., ROOM 153, SYRACUSE, N.Y. 13211	(315) 454-4916
EASTERN REGION: DEL., N.J., DOWNSTATE N.Y., PA.		
*NEW YORK CITY	90 CLINTON RD., FAIRFIELD, N.J. 07006	(201) 575-8240
LONG ISLAND	195 PARK AVENUE, BETHPAGE, N.Y. 11714	(516) 822-3533
PHILADELPHIA	129 TERWOOD DR., WILLOW GROVE, PA. 19090	(215) 659-8305
LANCASTER		(717) 393-3232
SOUTHEASTERN REGION: FLA., GA., MD., N.C., S.C., VA., WASH., W.VA.		
*WASHINGTON D.C.	NORTHERN VA. IND. PARK, 9022 TELEGRAPH RD., LORTON, VA. 22079	(703) 550-7507
BALTIMORE	6655 AMBERTON DR., 100 INDUSTRIAL PK., - UNIT A BALTIMORE, MD. 21227	(301) 796-1166
ORLANDO	102 LIVE OAKS BLVD., CASSELBERRY, FLA. 32707	(305) 834-3818
FT. LAUDERDALE	6858 N.W. 20th AVE., FT. LAUDERDALE, FLA. 33309	(305) 974-4660
CHARLOTTE	8920 YORK ROAD, CHARLOTTE, N.C. 28210	(704) 588-3297
SOUTH CENTRAL REGION: ALA., ARK., ILL. (SOUTH), IND., KY., LA., MISS., MO., OHIO, TENN.		
*CHICAGO	9930 DERBY LANE, WESTCHESTER, ILL. 60153	(312) 345-7920
CLEVELAND	5325 NAIMAN PKWY. - ROOM F, SOLON, OHIO 44139	(216) 248-0288
COLUMBUS	6969 WORTHINGTON-GALENA RD., WORTHINGTON, OHIO 43085	(614) 436-2065
INDIANAPOLIS	6240 LA PAS TRAIL, INDIANAPOLIS, IND. 46268	(317) 297-4149
NORTH CENTRAL REGION: ILL. (NORTH), IOWA, KANS., MICH., MINN., NEBR., N. DAK., OKLA., S. DAK., WIS.		
*CHICAGO	655 TOUHY, ELK GROVE VILLAGE, ILL. 60007	(312) 437-8180
DETROIT	12916 FARMINGTON RD., LIVONIA, MICH. 48154	(313) 525-5356
MILWAUKEE	6725 BOTTSFORD AVE., GREENFIELD, WIS. 53220	(414) 543-2200
MADISON	2317 S. STOUGHTON RD., MADISON, WIS. 53716	(608) 222-1662
MINNEAPOLIS	8824 SEVENTH AVE., NO., GOLDEN VALLEY, MINN. 55427	(612) 546-0808
LANSING	3202 S. PENNSYLVANIA AVE., LANSING, MICH. 48910	(517) 393-5665
OKLAHOMA CITY	1000 CORNELL PKWY., SUITE 700, OKLAHOMA CITY, OK. 73108	(405) 947-0969
DES MOINES	P.O. BOX 992, DES MOINES, IOWA 50304	(515) 244-2228
WESTERN REGION: ARIZ., CALIF., COLO., IDAHO, MONT., NEV., N. MEX., OREG., TEX., UTAH, WASH., WYO.		
*LOS ANGELES	5445 SHIELA, CITY OF COMMERCE, CALIF. 90040	(213) 724-5051
SAN FRANCISCO	521 MARINE VIEW, SUITE G, BELMONT, CALIF. 94002	(415) 591-7412
PHOENIX/ TUCSON	958 W. GRANT RD., TUCSON, AZ. 85711	(602) 623-6419
DENVER	7100 BROADWAY, BUILDING 3-J, DENVER, COLO. 80221	(303) 429-9555
HOUSTON	6400 WESTPARK DR., ROOM 222, HOUSTON, TX. 77027	(713) 785-5752
CANADA: ONTARIO, QUEBEC		
TORONTO	31 KLONDIKE DRIVE, WESTON, ONTARIO, CANADA M9L 1S1	(416) 745-9474

*REGION HEADQUARTERS

TELETYPE

Product Service

PRODUCT SERVICE HEADQUARTERS
5555 TOUHY AVE.
SKOKIE, ILL. 60076
(312) 982-3920
TWX: 910-223-3611

PART 2 — INSTALLATION

INDEX PAGE

A. IDENTIFICATION
1. GENERAL 2

B. TYPICAL EQUIPMENT CONFIGURATIONS 3

C. CARD ARRANGEMENTS
1. DISPLAY LOGIC CARD ARRANGEMENT -- 40/1 16
2. DISPLAY LOGIC CARD ARRANGEMENT -- 40/2 17
3. DISPLAY LOGIC CARD ARRANGEMENT -- 40/3 18
4. CONTROLLER LOGIC CARD ARRANGEMENT 19
5. 9140 STATION CONTROLLER CARD ARRANGEMENT 20

D. KEYSWITCH AND KEYTOP IDENTIFICATION
1. KEYBOARD 21
2. ADD-ON FEATURES FOR MODEL 40 TERMINALS OR STATIONS 22
3. STANDARD FEATURES FOR MODEL 40 ROP/STATIONS 22

E. INTERFACING 23

F. STATION ASSEMBLY 24

PART 2 — INSTALLATION
A. IDENTIFICATION

1. GENERAL

Knowing what features are provided and how those features are programmed to operate provide the basic understanding necessary for installation, operational checkout, or "in the field" service call routines. Several methods are presented in the following paragraphs for determining terminal features and programming.

Features included in a terminal can be identified by observing if certain keytops are provided on the operator console, or if a certain type or quantity of printed circuit boards are present in the display controller and display logic circuitry.

Programming on this terminal should be recorded on the Feature and Option Record (see Page 2-95). Features, options or special notations must be recorded by checking [X] on the variable number (eg, Option 17.d. [78] for right-hand margin) in the appropriate square.

References in this manual to TELETYPE Standard Serial Interface (SSI) describe input/output signaling characteristics for devices using high-speed SSI signals.

B. TYPICAL EQUIPMENT CONFIGURATIONS

Keyboard Display (KD) Set -- 40/1 and 40/2

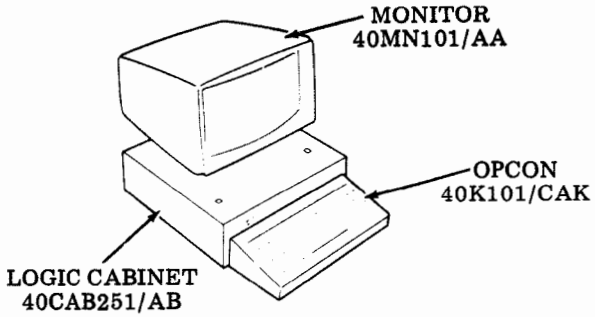

Keyboard Display (KD) Station -- 40/1 and 40/2

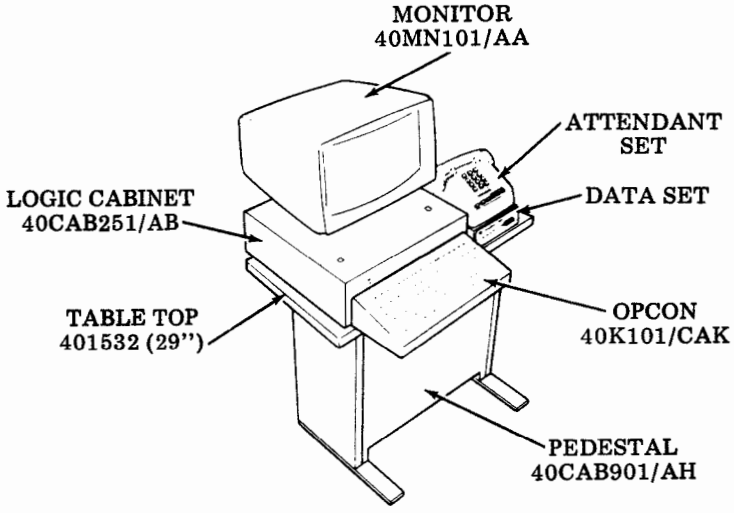

Keyboard Display (KD) Set With Pedestal -- 40/1 and 40/2

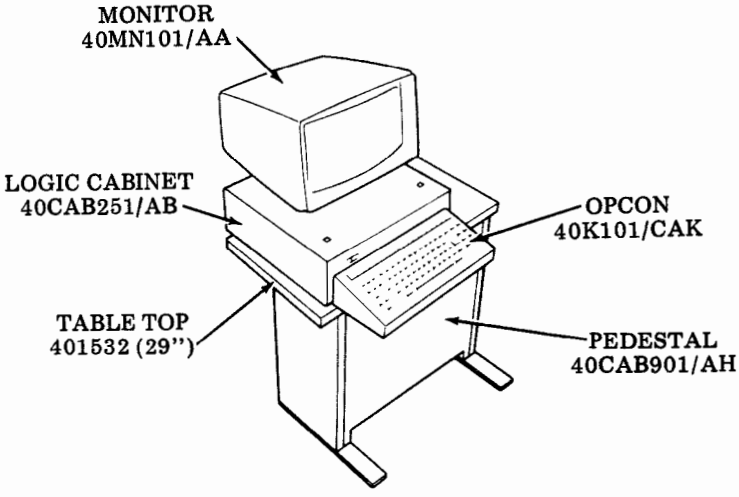

B. TYPICAL EQUIPMENT CONFIGURATIONS (Cont)

Keyboard Display Printer (KDP) With Adjacent Printer -- 40/1 and 40/2

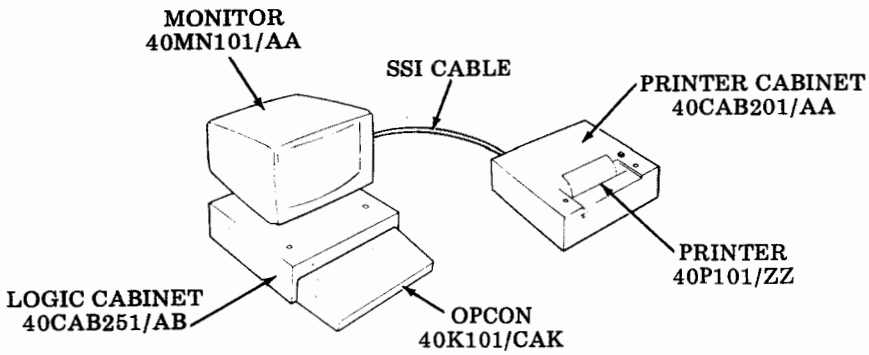

Keyboard Display Printer (KDP) With Adjacent Logic -- 40/1 and 40/2

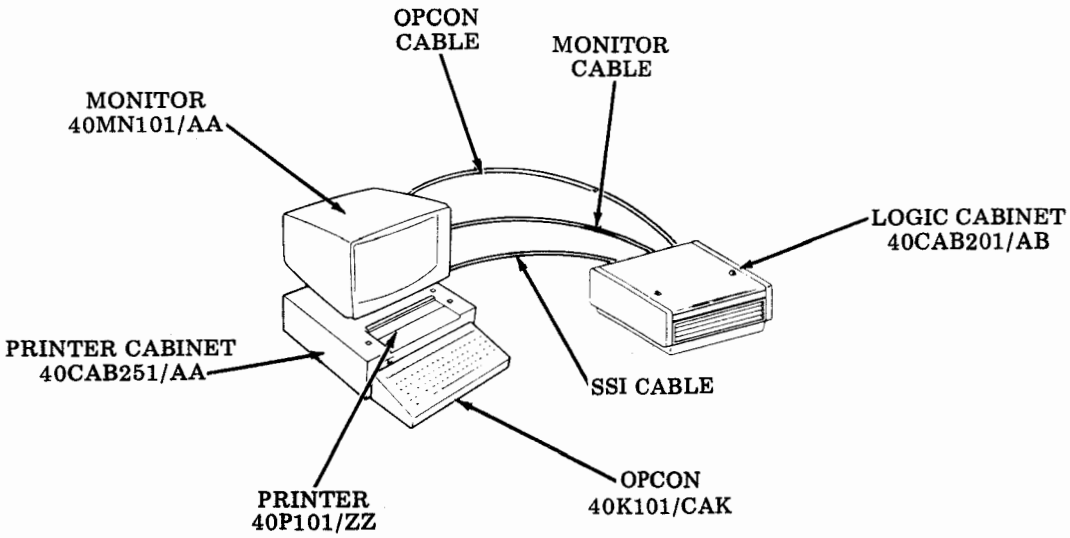

Keyboard Display Printer (KDP) Station -- 40/1 and 40/2

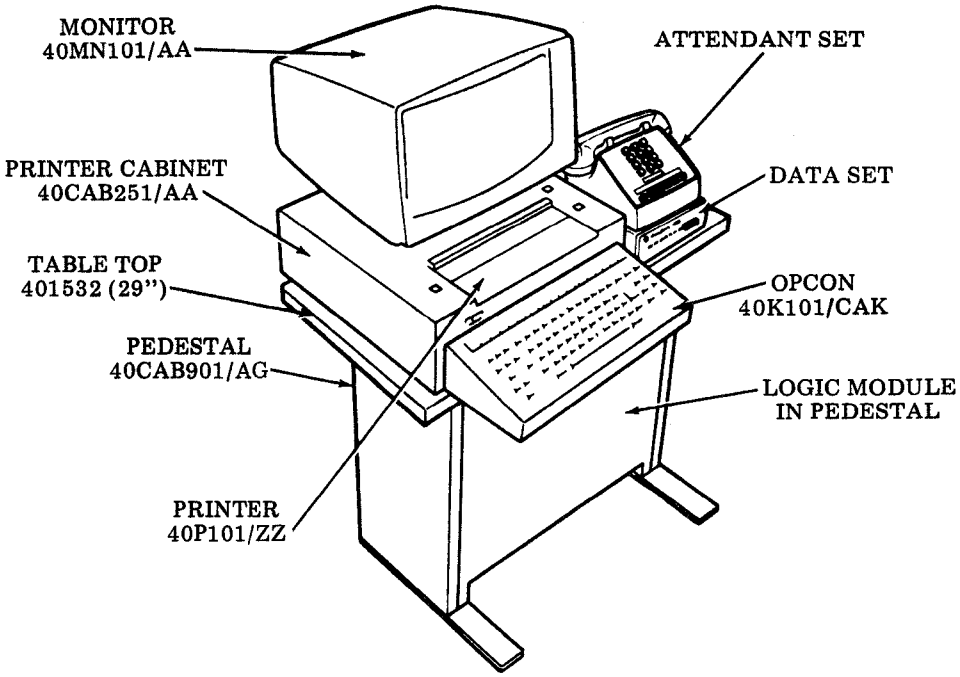

Keyboard Display Printer (KDP) Set on Same Top and Pedestal -- 40/1 and 40/2

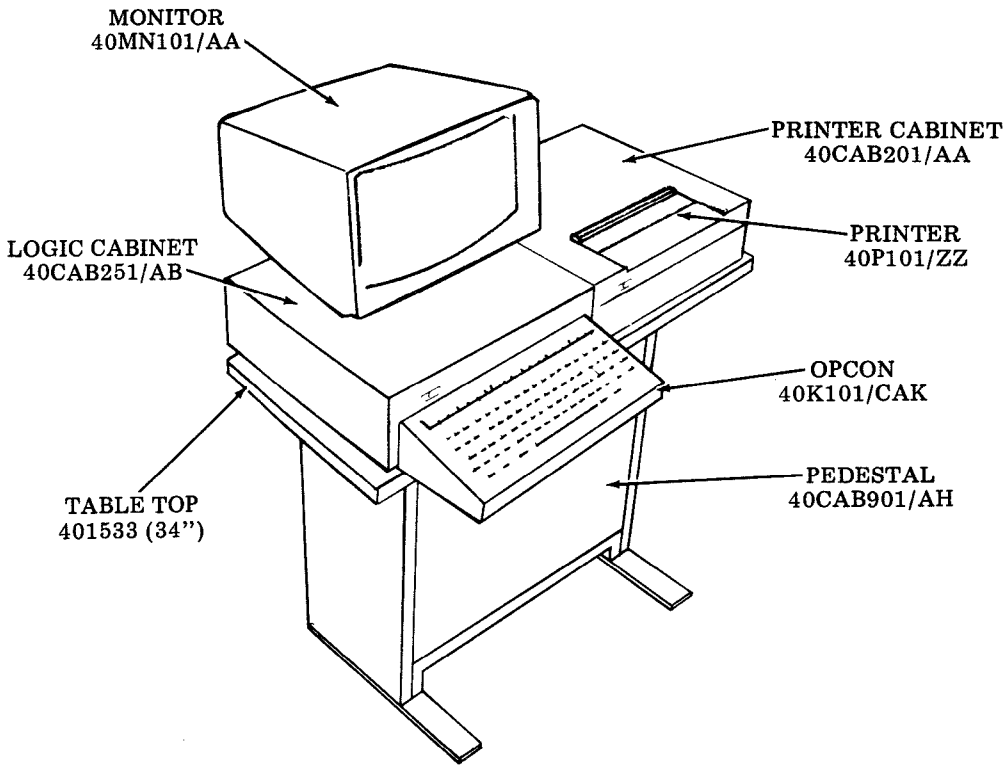

B. TYPICAL EQUIPMENT CONFIGURATIONS (Cont)

Keyboard Display Printer (KDP) Station With Tractor Feed Printer on Its Own Pedestal -- 40/1 and 40/2

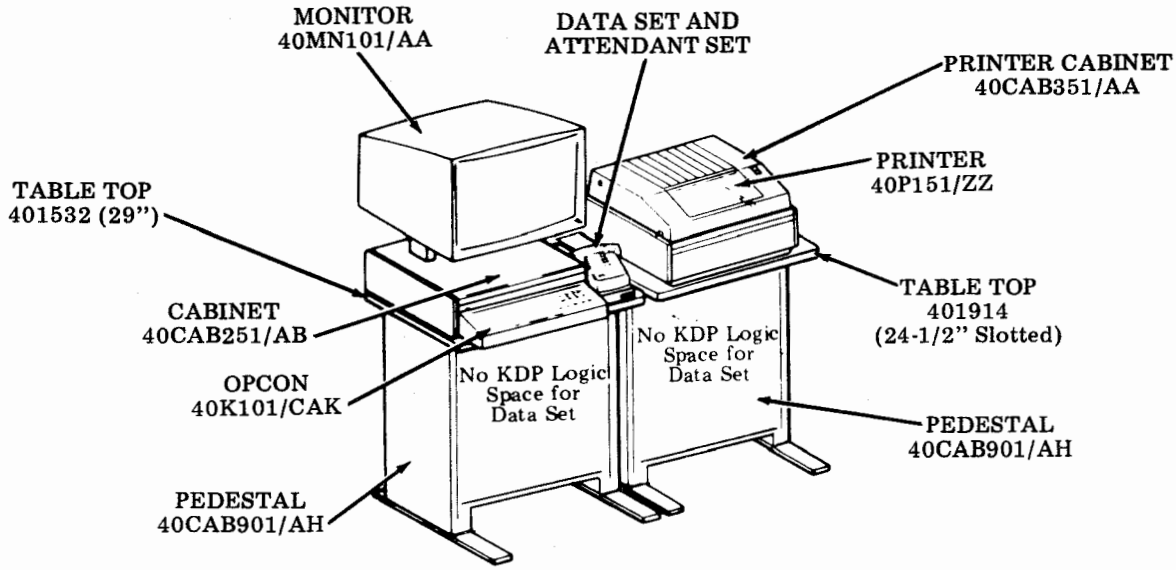

Keyboard Display Printer (KDP) Set With Adjacent Tractor Feed Printer -- Table Model -- 40/1 and 40/2

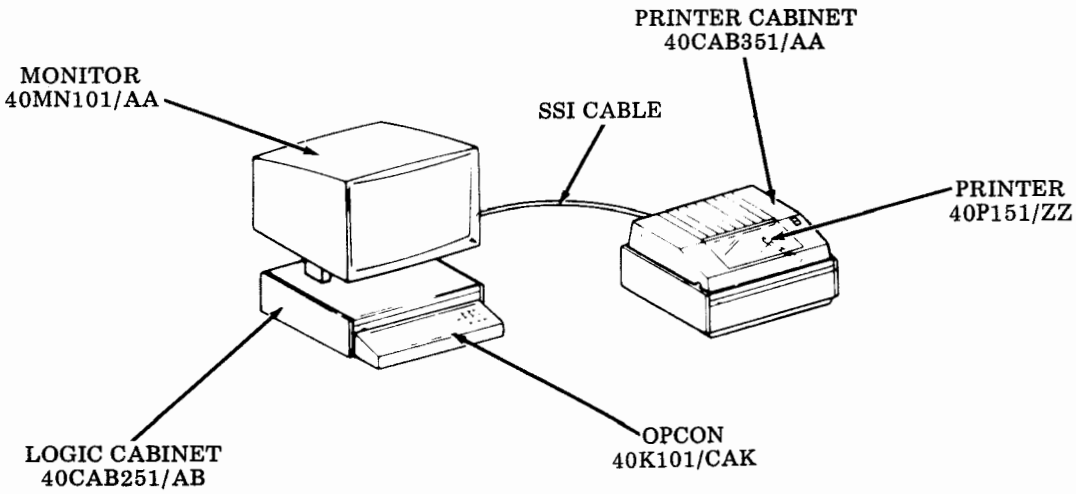

Receive-Only Printer (ROP) Station -- Friction Feed -- 40/1

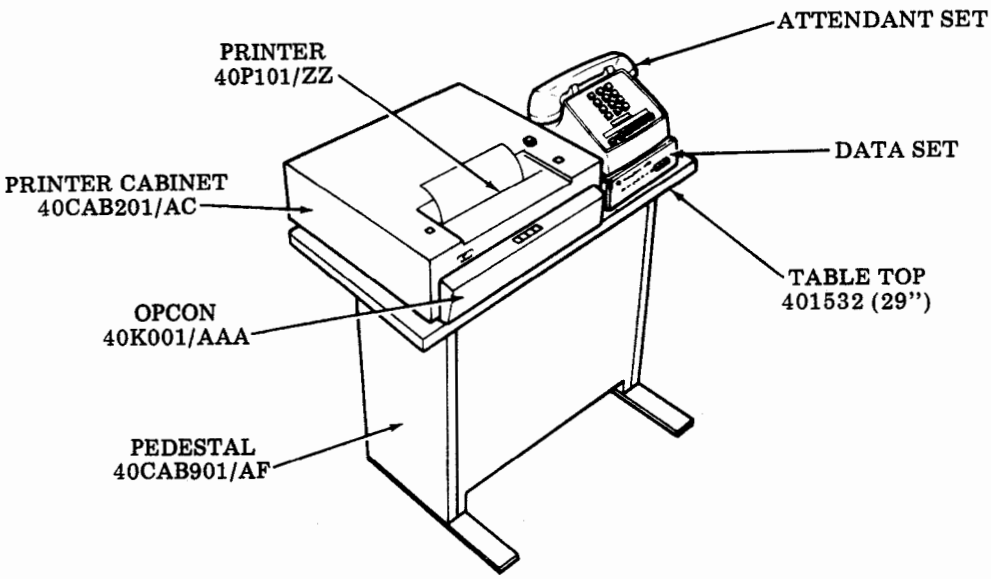

Receive-Only Printer (ROP) Station -- Tractor Feed -- 40/1

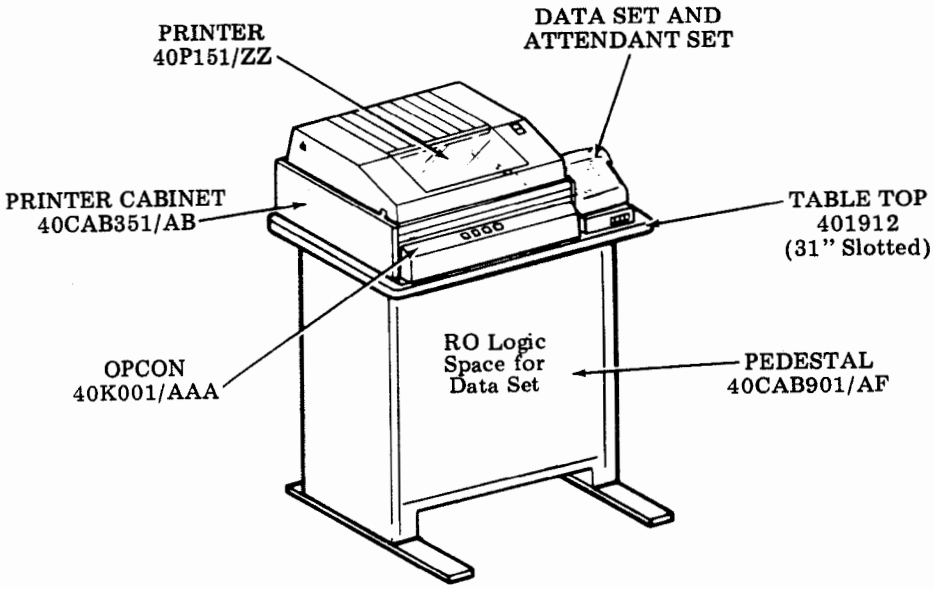

B. TYPICAL EQUIPMENT CONFIGURATIONS (Cont)

Keyboard Display (KD) Station -- 40/3

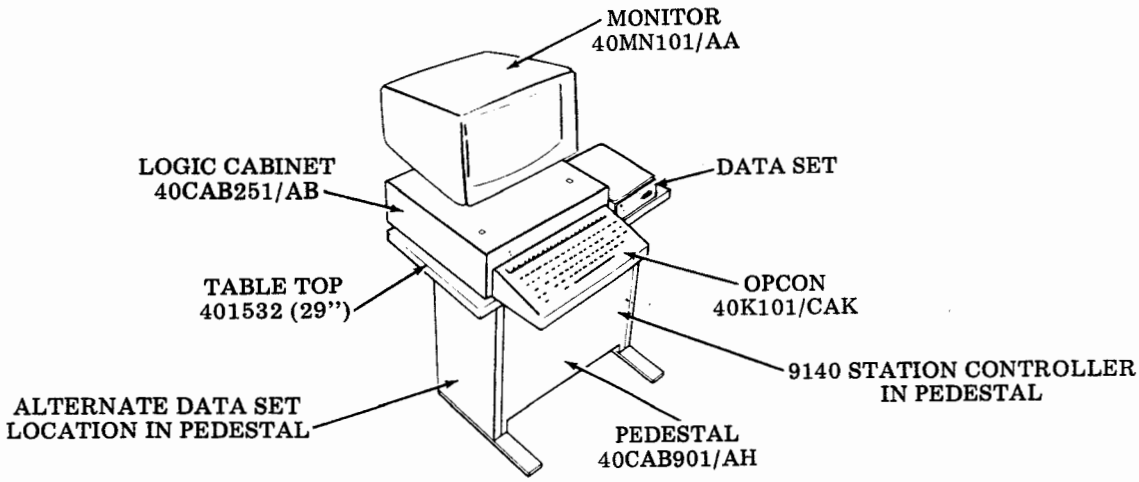

Keyboard Display Printer (KDP) Station With Adjacent Printer on Same Top and Pedestal -- 40/3

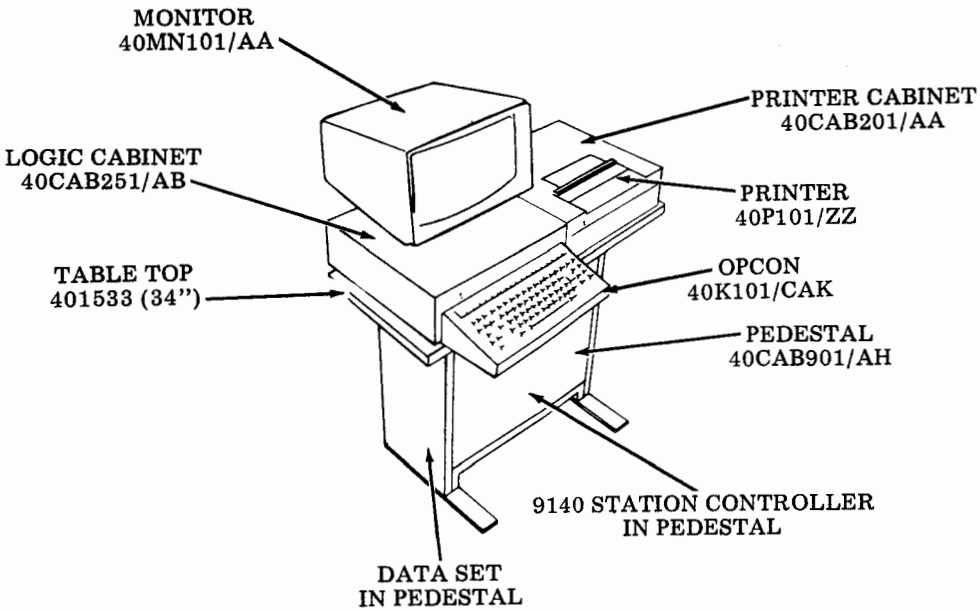

Keyboard Display Printer (KDP) Station With Printer Under Display -- 40/3

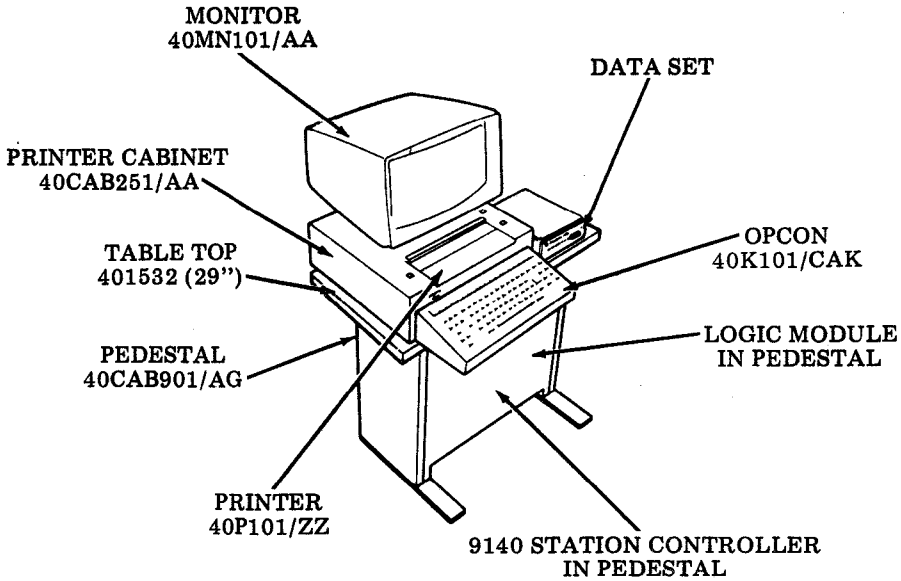

Keyboard Display Printer (KDP) Station With Tractor Feed Printer on Separate Pedestals -- 40/3

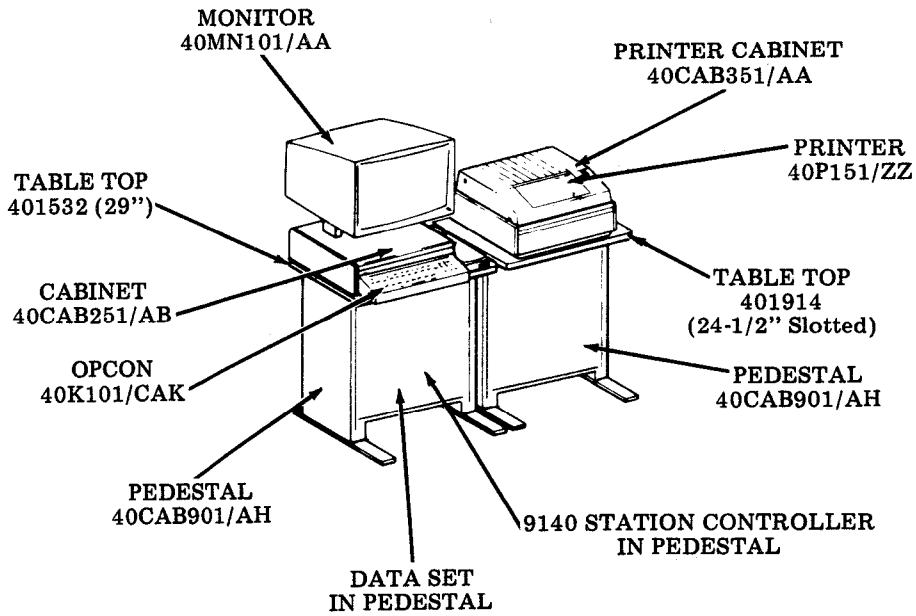

B. TYPICAL EQUIPMENT CONFIGURATIONS (Cont)

Receive-Only Printer (ROP) Station -- Friction Feed -- 40/3

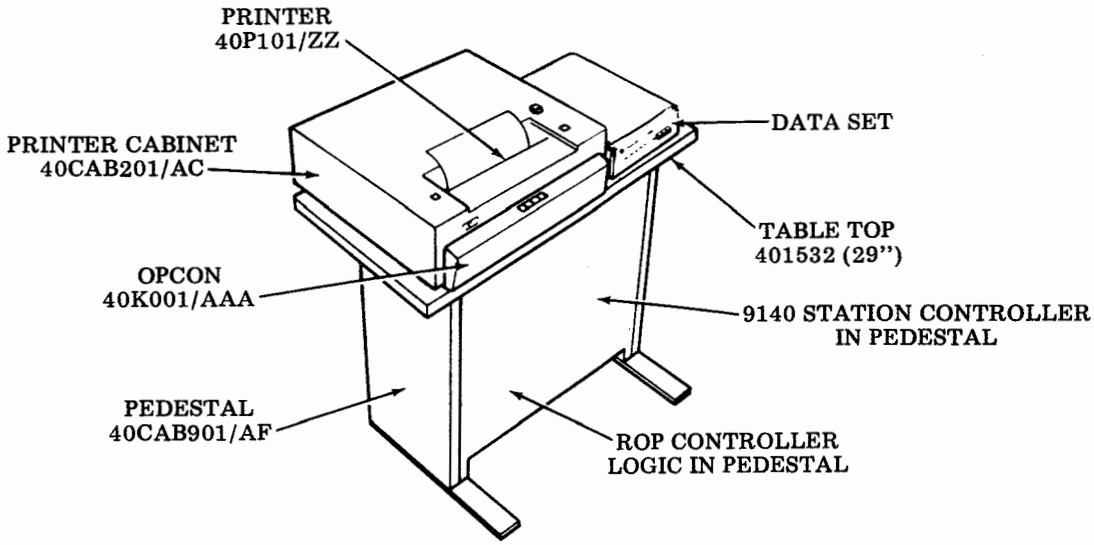

Receive-Only Printer (ROP) Station -- Tractor Feed -- 40/3

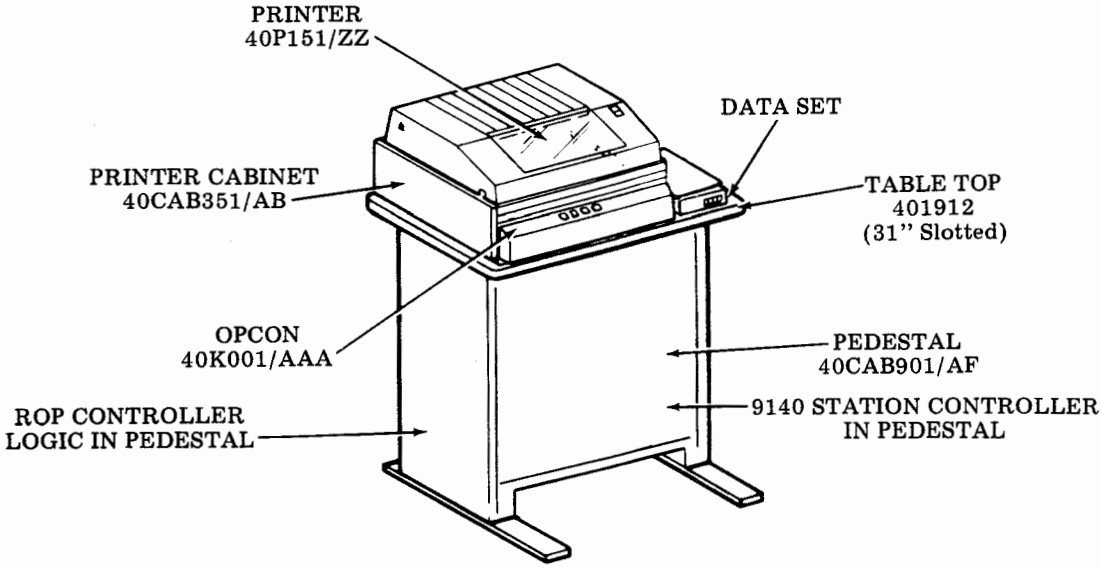

Keyboard Display (KD) With Receive-Only Printer (ROP) -- Friction Feed -- 40/3
(With this arrangement data can be received by the monitor, printer, or both.)

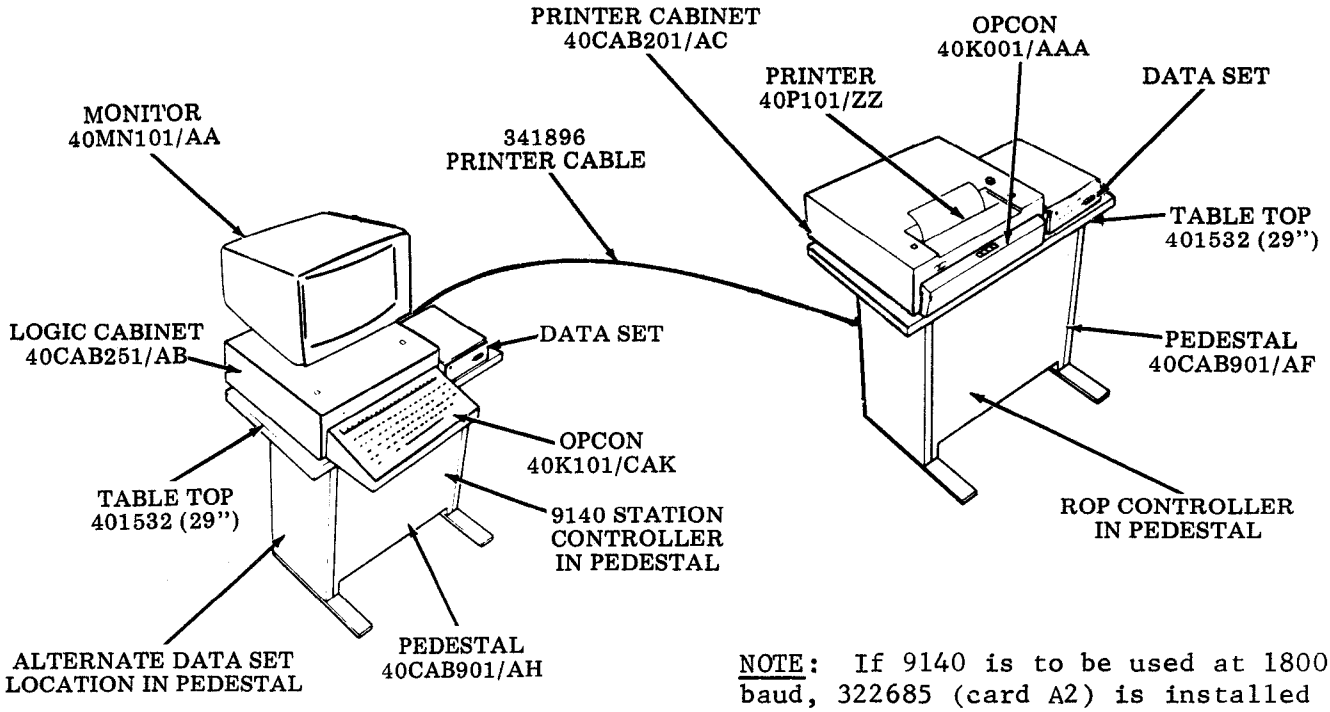

NOTE: If 9140 is to be used at 1800 baud, 322685 (card A2) is installed in location A, 303863 (card A-3G) is mounted on card A2.

Keyboard Display (KD) With Receive-Only Printer (ROP) -- Tractor Feed -- 40/3
(With this arrangement data can be received by the monitor, printer, or both.)

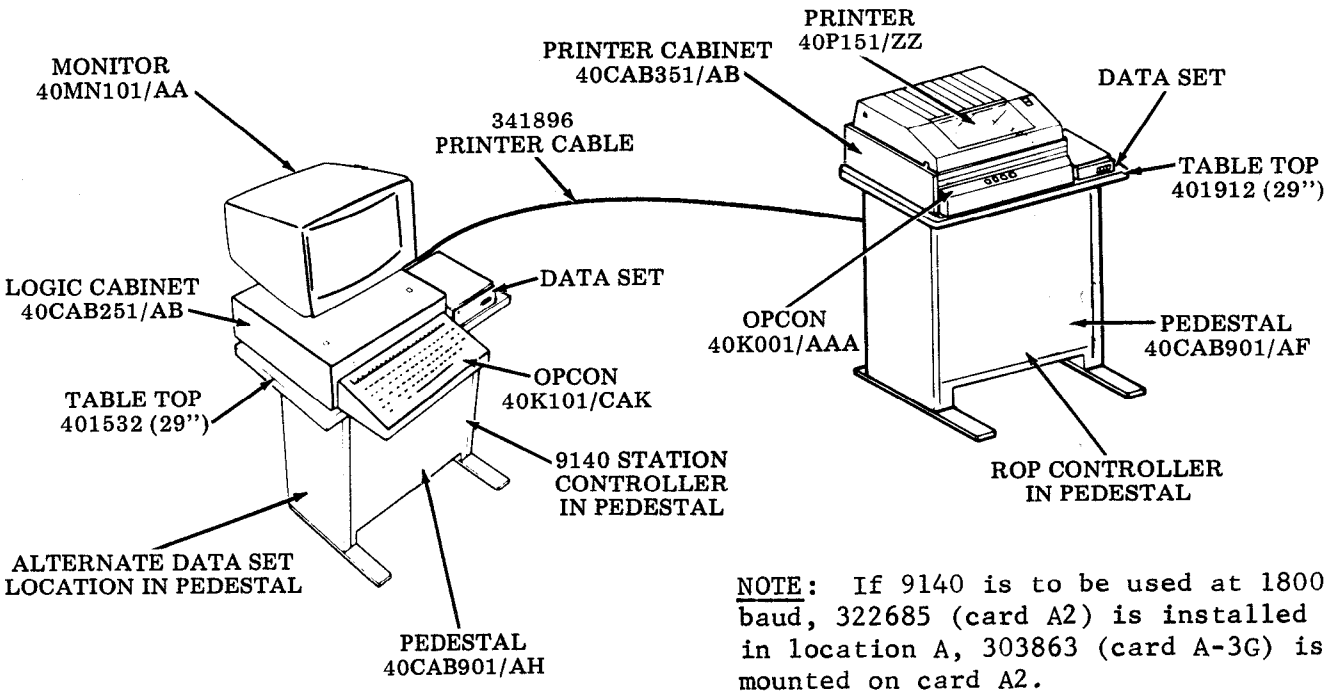

NOTE: If 9140 is to be used at 1800 baud, 322685 (card A2) is installed in location A, 303863 (card A-3G) is mounted on card A2.

B. TYPICAL EQUIPMENT CONFIGURATIONS (Cont)

Keyboard Display (KD) and Receive-Only Printer (ROP) -- Friction Feed -- 40/3
(With this arrangement data can be received only by the printer -- data cannot be received by the KD.)

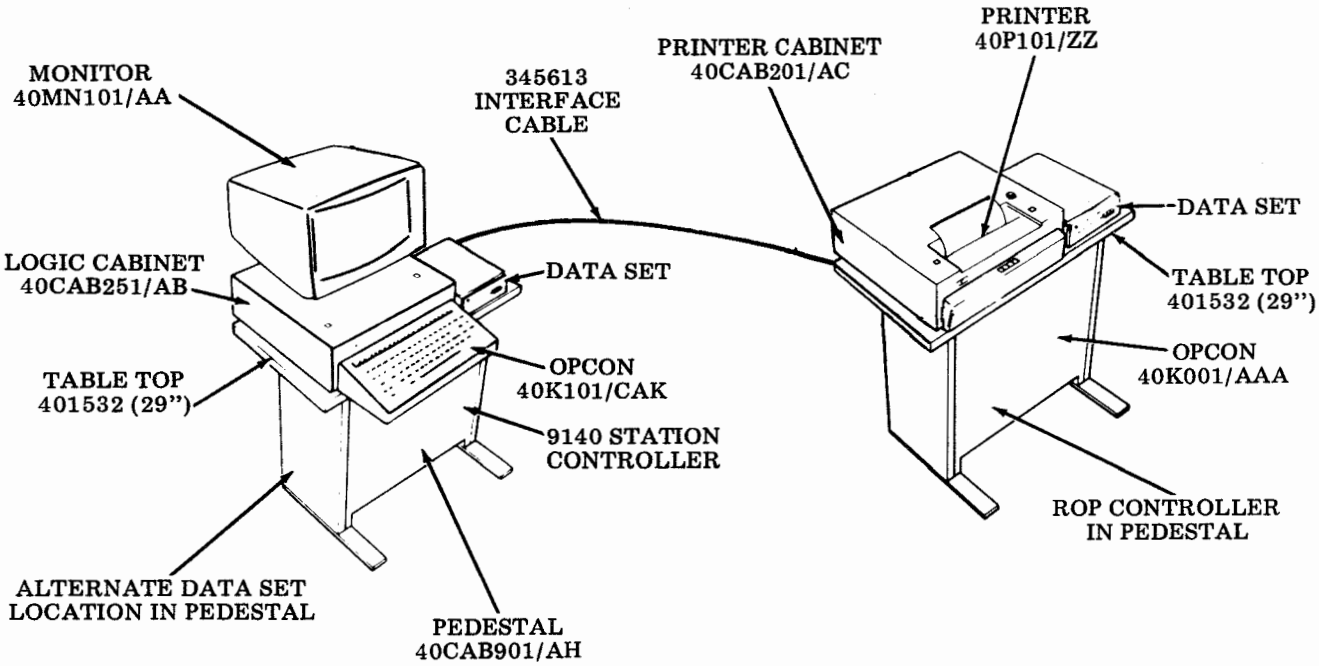

Keyboard Display (KD) and Receive-Only Printer (ROP) -- Tractor Feed -- 40/3
(With this arrangement data can be received only by the printer -- data cannot be received by the KD.)

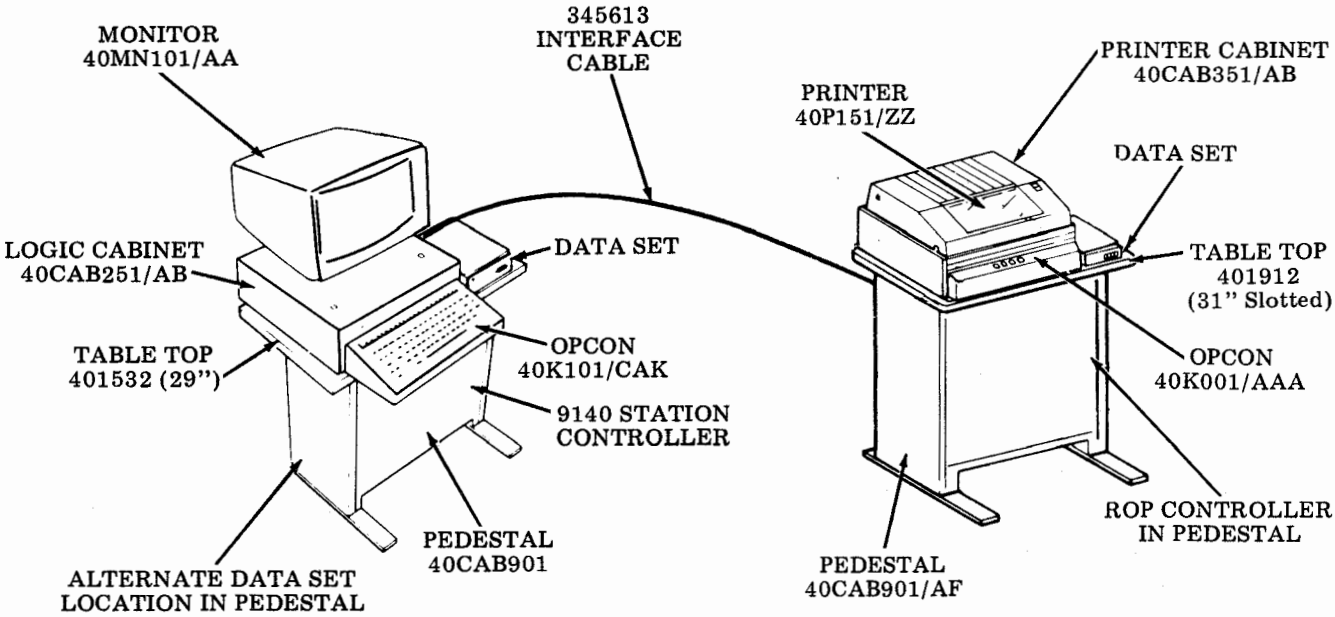

Keyboard Display Printer (KDP -- Friction Feed Printer Under Display) and Receive-Only Printer (ROP) -- Friction Feed -- 40/3

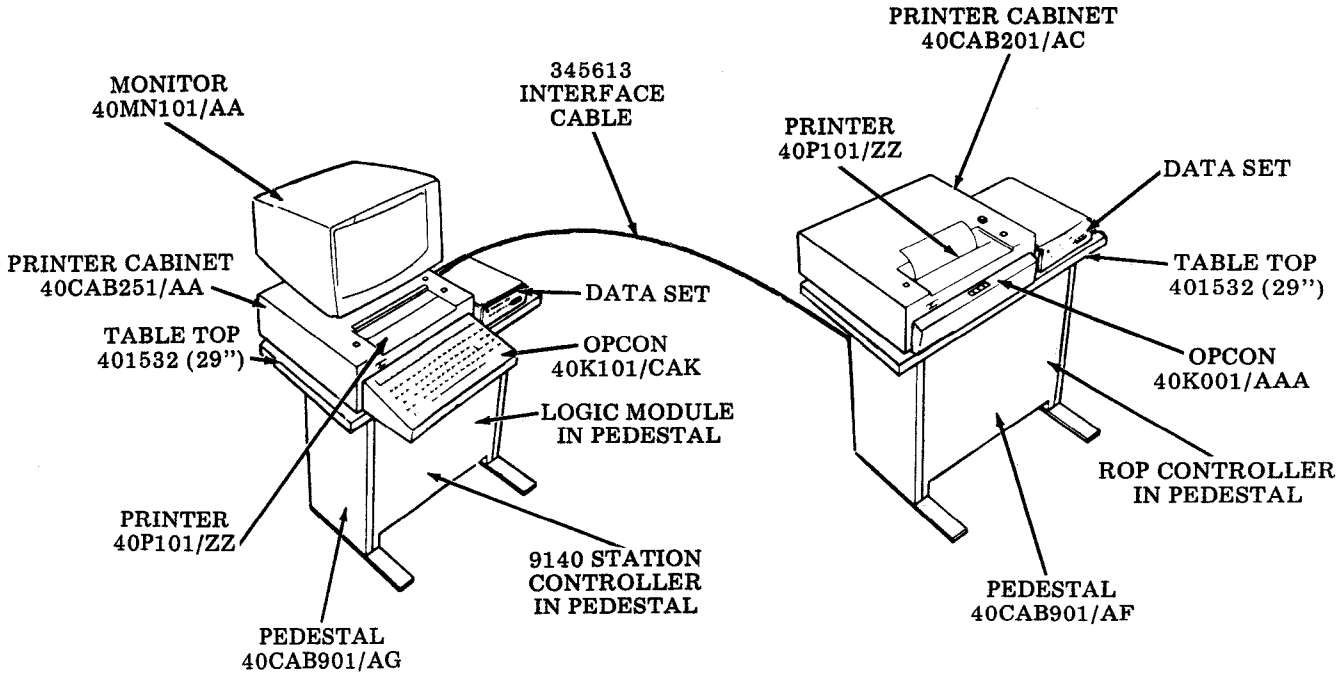

Keyboard Display Printer (KDP -- Friction Feed Printer Adjacent) and Receive-Only Printer (ROP) -- Friction Feed -- 40/3

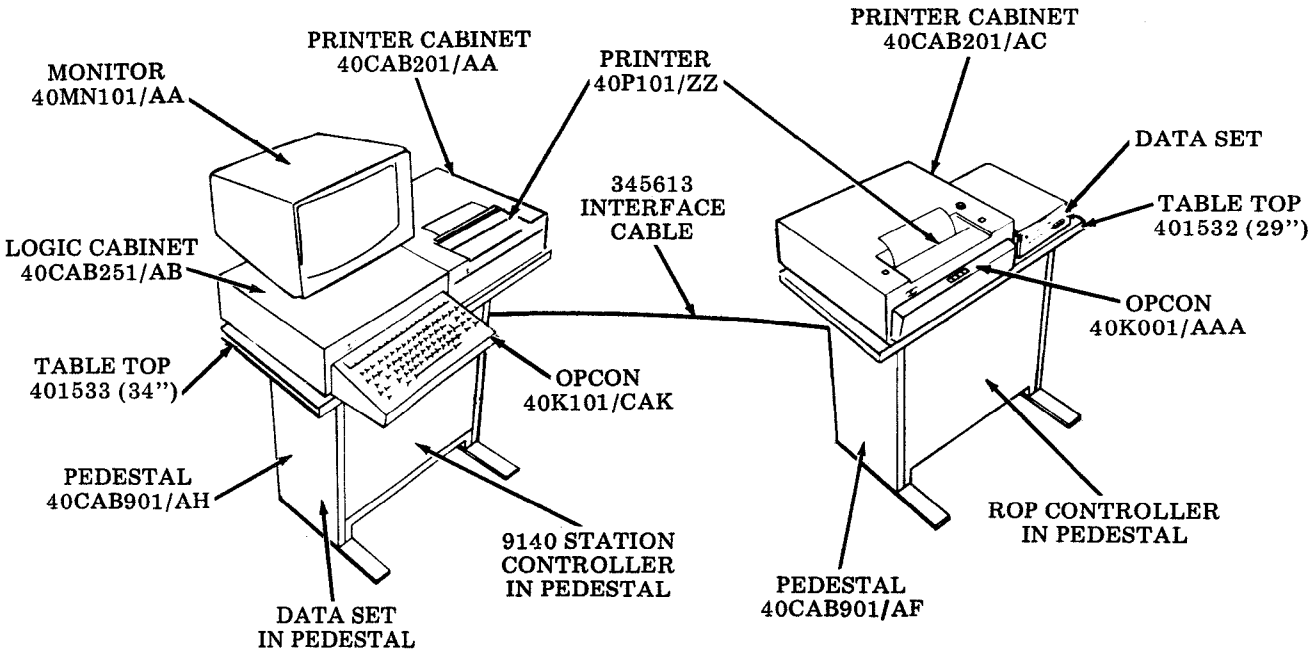

B. TYPICAL EQUIPMENT CONFIGURATIONS (Cont)

Keyboard Display Printer (KDP) -- Tractor Feed Printer Adjacent and Receive-Only Printer (ROP) -- Tractor Feed -- 40/3

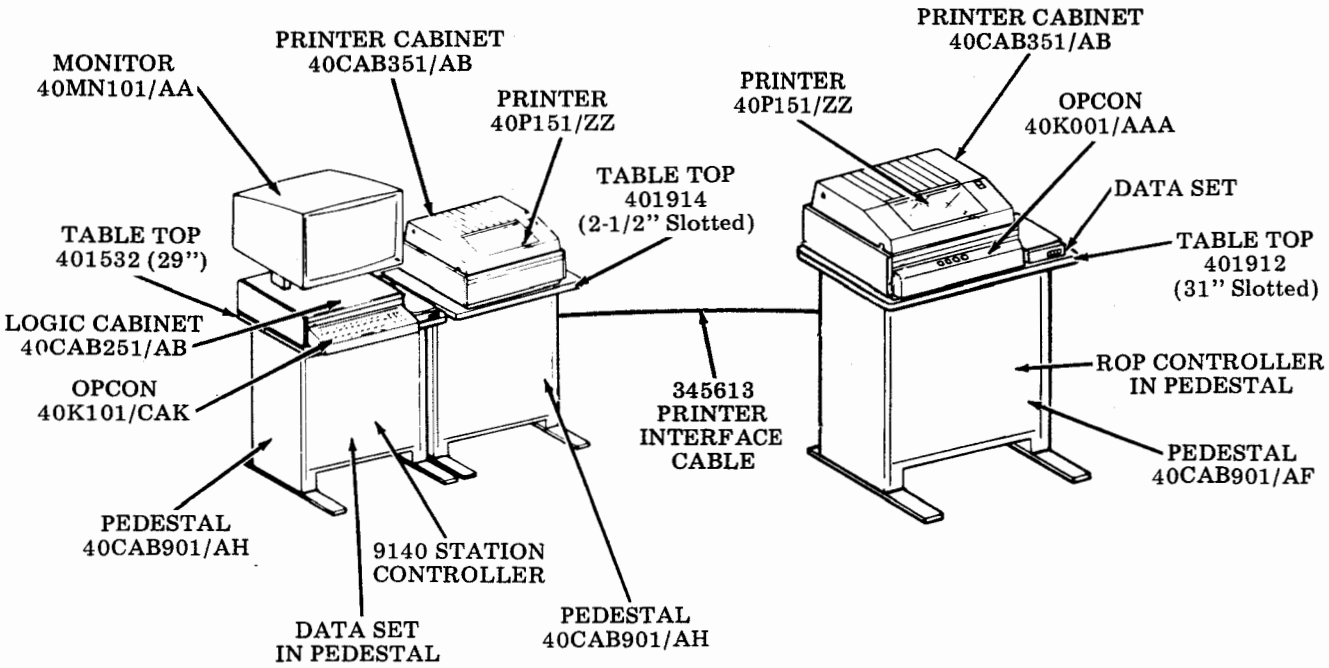

Keyboard Display (KD) With Receive-Only 132-Column Tractor Feed Printer

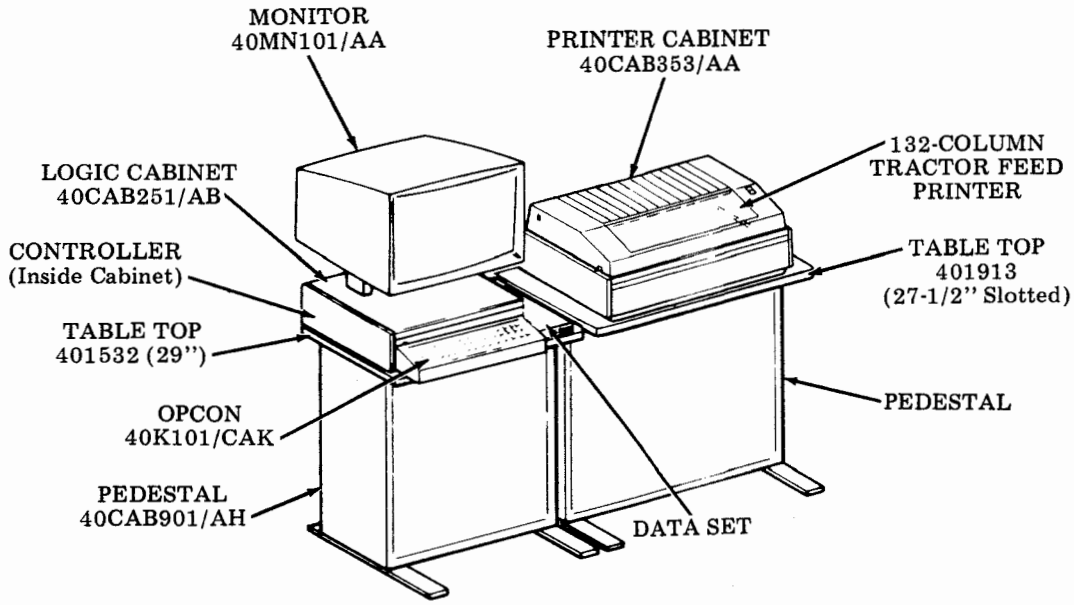

Keyboard Display (KD) With Receive-Only 132-Column Tractor Feed Printer -- 40/3

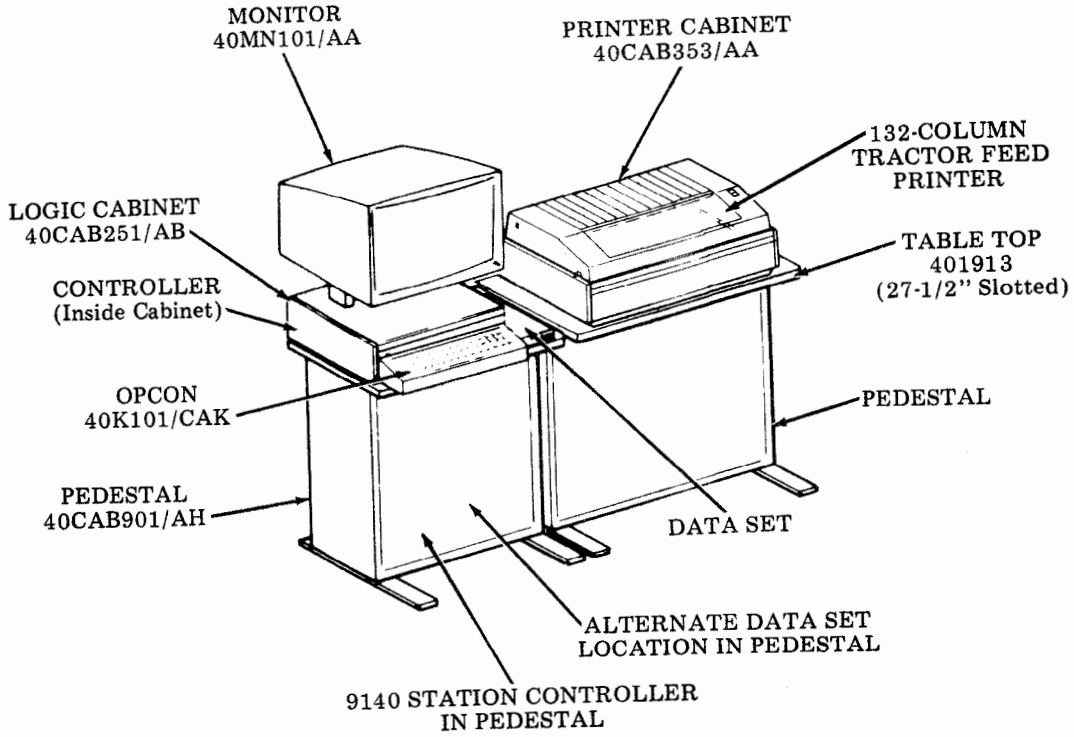

C. CARD ARRANGEMENTS

1. DISPLAY LOGIC CARD ARRANGEMENT -- 40/1

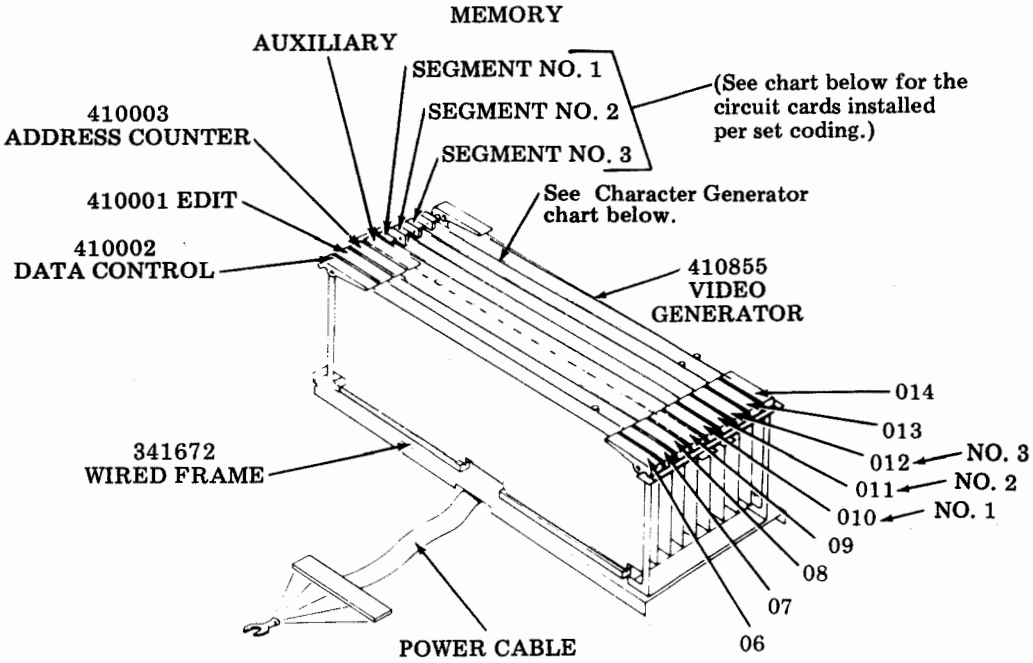

CHARACTER GENERATOR OPTIONS	
POSITION 013	DISPLAY TYPE
410657	Standard ASCII
410020	Line Drawing
410021	Fractions
410022	Weather

DISPLAY LOGIC ARRANGEMENTS (40DL291/ZZ)						
Memory Segment	Basic 24 Lines	Basic 48 Lines	Basic 72 Lines	Full Edit 24 Lines	Full Edit 48 Lines	Full Edit 72 Lines
No. 1	410004	410004	410004	410005	410005	410005
No. 2	None	410004	410004	None	410005	410005
No. 3	None	None	410004	None	None	410005
Basic Edit Controller (40C102)				Full Edit Controller (40C202)		

2. DISPLAY LOGIC CARD ARRANGEMENT -- 40/2

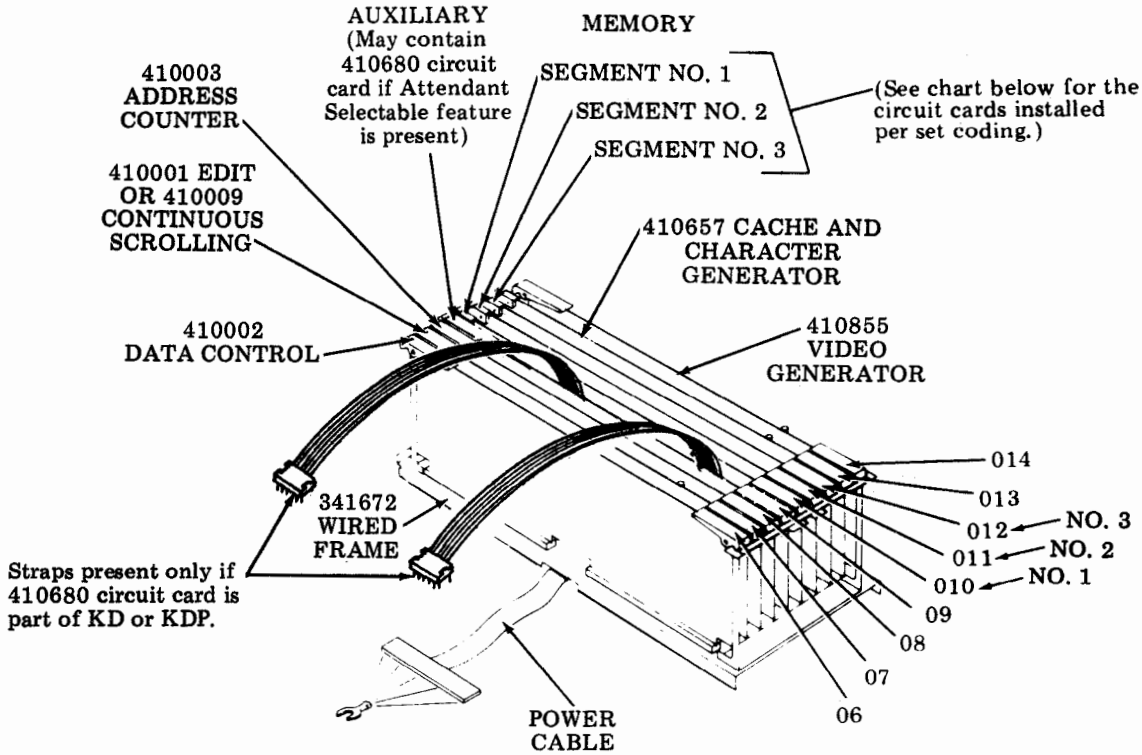

DISPLAY LOGIC ARRANGEMENTS (40DL291/ZZ)			
Memory Segment	Full Edit 24 Lines	Full Edit 48 Lines	Full Edit 72 Lines
No. 1	410005	410005	410005
No. 2	None	410005	410005
No. 3	None	None	410005

Full Edit Controller
40C204/BA

C. CARD ARRANGEMENTS (Cont)

3. DISPLAY LOGIC CARD ARRANGEMENT -- 40/3

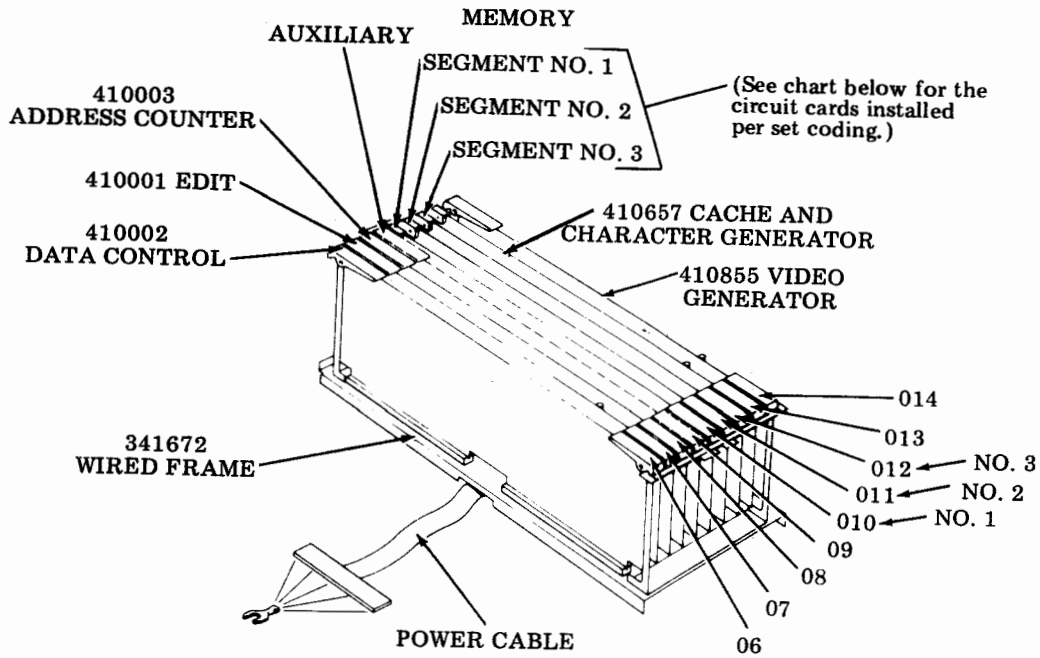

DISPLAY LOGIC ARRANGEMENTS (40DL291/ZZ)			
Memory Segment	Full Edit 24 Lines	Full Edit 48 Lines	Full Edit 72 Lines
No. 1	410005	410005	410005
No. 2	None	410005	410005
No. 3	None	None	410005
Full Edit Controller (40C202/BG)			

4. CONTROLLER LOGIC CARD ARRANGEMENT (See Note at bottom of page.)

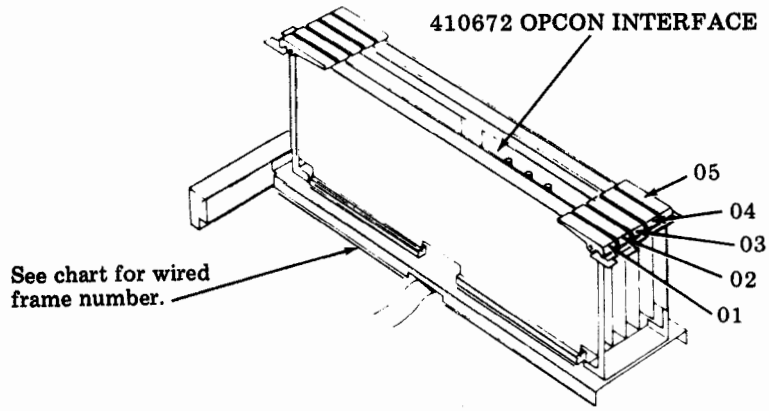

POSITION	40C102/AB	40C102/AC	40C202/BC	40C202/BD	40C202/BE	40C202/BF	40C202/BG (See Note)	40C204/BA	40C204/BB	CARD DESCRIPTION
01				410670						S/R and Printer
						410770			410770	Printer Interface
	410671	410671	410671	410671						EIA Interface
02					410771	410771				Modified EIA Interface
								410679	410679	Full Duplex Interface
03	410672	410672	410672	410672	410672	410672	410672	410672	410672	Opcon Interface
			410676	410676	410676	410676	410676	410676	410676	Send Variations
04	410670									S/R and Printer
			410675	410675	410675	410675	410675	410675	410675	Message Control
05	410669	410669								Model 40 Control
			410674	410674	410674	410674	410674	410674	410674	Data Bus and Decode
WIRED FRAME	341907	341907	341909	341909	341909	341909	341909	402176	402176	

NOTE: 40C202/BG is a basic controller. Other controller codes may be derived by adding appropriate cards to the BG controller (provided 341909 wired frame is intermediate or late design).

Applications:

40/1 -- 40C102/AB
40C102/AC
40C202/BC
40C202/BD
40/2 -- 40C204/BA
40C204/BB
40/3 -- 40C202/BE
40C202/BF

C. CARD ARRANGEMENTS (Cont)

5. 9140 STATION CONTROLLER CARD ARRANGEMENT

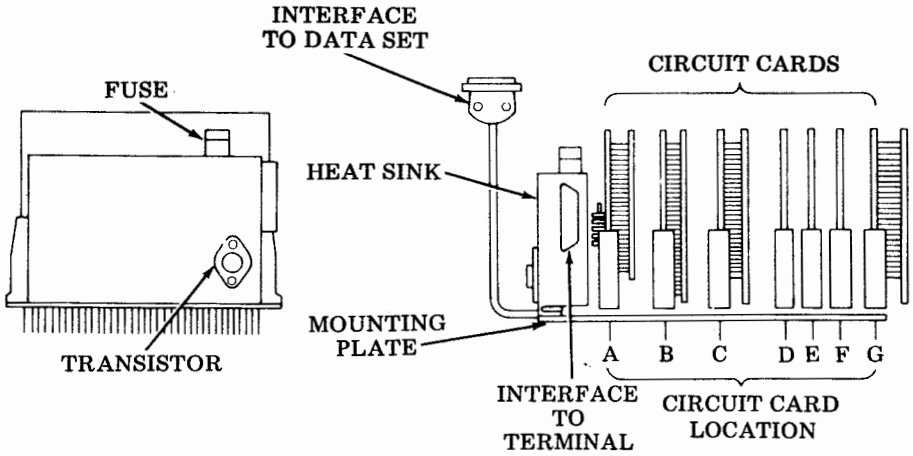

CIRCUIT CARDS	CIRCUIT CARD LOCATION	PART NO.	FUNCTION
A	A	322010	CDC Detector
**A-1	Mounted on Card A	322409	Third CDC Detector
A-3C or A-3E	Mounted on Card A	303805 or 303839	1050 Baud Timer 1200 Baud Timer
B	B	322011	R/T Distributor
B-1	Mounted on Card B	322411	Parity Error Detection
C2	C	322013	ROP Control Logic
C2-2	Mounted on Card C2	322442	A/B and Motor Control (Selected)
D1	D	322014	Send/Receive Logic
E2	E	322451	EIA Interface
F1	F	322017	Buffer
G3	G	322083	Channel Control Store and Forward
*MC641	Mounted on Card G3	322641	Alarm/Parity Error Response
R	Under Heat Sink	303808	Voltage Regulator

*Part of 345625 alarm modification kit which is optional. The other parts of 345625 modification kit are the 345626 alarm assembly and mounting hardware.

**322409 third CDC circuit card assembly which is optional.

D. KEYSWITCH AND KEYTOP IDENTIFICATION

1. KEYBOARD

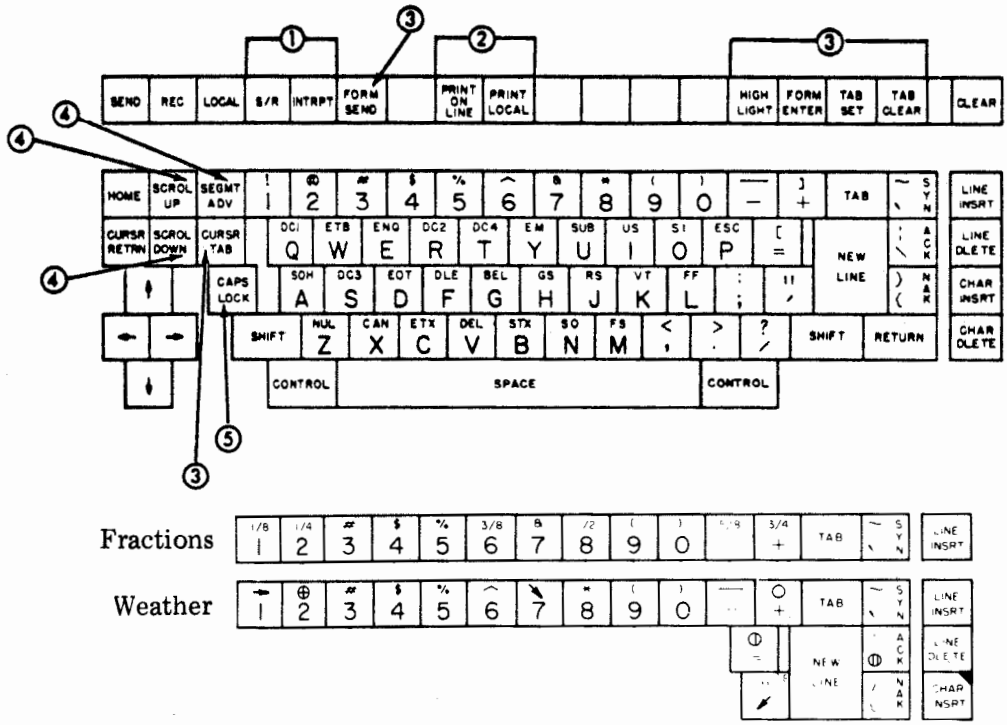

① Keytops present for S/R (conversation mode) (see Note).
40/1 and 40/2 -- These keys are not used in 40/3 arrangements and are covered with a blocking keytop.

② Keytops present when terminal is equipped with page printer (see Note).

③ Keytops are present only if terminal has full edit feature (see Note).

④ Keytops present only if terminal has 40 or 72 line display memory (see Note).

⑤ If CAPS LOCK keytop is not present, keyswitch plunger is latched (down) for monocase -- all caps -- operation; blocking type keytop is installed over switch housing. First depression latches keyswitch (down); second depression unlatches keyswitch (up).

CAUTION: IF KEYTOP IS PRESENT AND REMOVAL IS REQUIRED, DO NOT REMOVE KEYTOP FROM SWITCH SHAFT UNLESS SWITCH PLUNGER IS OPERATED INTO UNLATCHED UP POSITION.

NOTE: If keytop is not provided within console arrangement, a blocking type keytop (unmarked) is installed over housing of keyswitch. Keytops are not present under blocking cap.

D. KEYSWITCH AND KEYTOP IDENTIFICATION (Cont)

2. ADD-ON FEATURES FOR MODEL 40 TERMINALS OR STATIONS

Expanded Memory

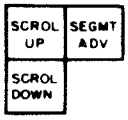

These edit controls are provided when terminal display memory is expanded to either 48 or 72 lines.

48 LINE expanded memory terminals have two 410004 or 410005 circuit cards (in Segment 1 and Segment 2 positions) in the Display Logic Module.

72 LINE expanded memory terminals have three 410004 or 410005 circuit cards (in Segment 1, 2, and 3 positions) in the Display Logic Module.

Full Edit

These edit controls are provided when a terminal has a complete edit complement.

Conversation Mode

Provided on operator console for "line at a time" or "multiple line" operation (does not apply to 40/3 arrangements).

Page Printer

Provided in operator console arrangement when Model 40 page printer is provided with terminal.

3. STANDARD FEATURES FOR MODEL 40 ROP/STATIONS

Operator Console

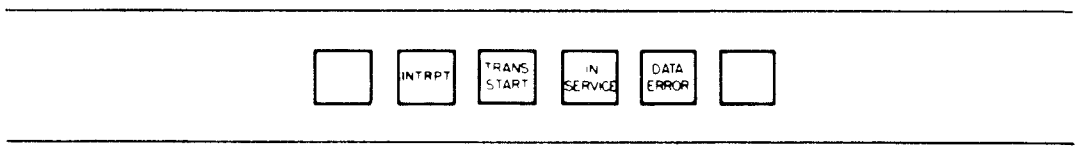

NOTE: Some ROP stations have a 1000-character storage unit. See Page 7-11 for identification.

E. INTERFACING

Switched Network Terminals -- 40/1: EIA RS-232-C

TTY Compatible -- 40/2: 1. EIA RS-232-C
2. Current Loop 20/60 milliamp operation

40/9140 -- 40/3: EIA RS-232-C

NOTE: All 132-column printers are shipped with the 410151 power supply card grounding options selected for SSI operation (option screw A on the component side and option screw B on the noncomponent side). If the printer is equipped with a 410072 logic card and the customer requires a modified EIA signal interface, the grounding options will require change.

Screw A -- Component Side: Connects the printer logic supply to frame ground at the printer side of the interface.

Non-component Side: Separates the logic supply from frame ground at the printer.

Pins 6 and 7 of P115 are connected to the printer power supply ground.

Screw B -- Component Side: Connects the positive voltage supply ground to the logic supply ground.

Non-component Side: Separates the positive voltage supply ground from the logic supply ground.

The positive voltage supply ground and the logic supply ground must be connected when using a modified EIA signal interface.

Interface Diagram -- Switched Network (40/1) and TTY Compatible (40/2)

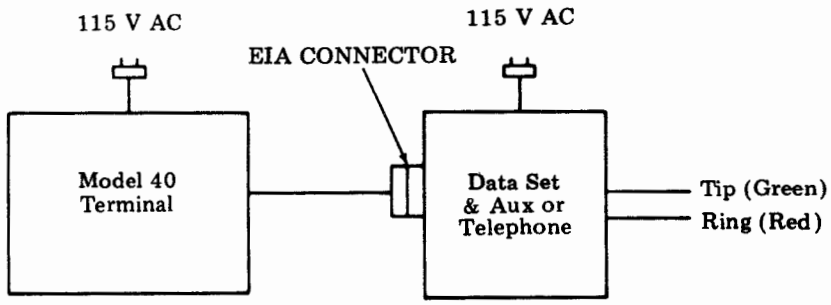

Interface Diagram -- 40/9140 (40/3)

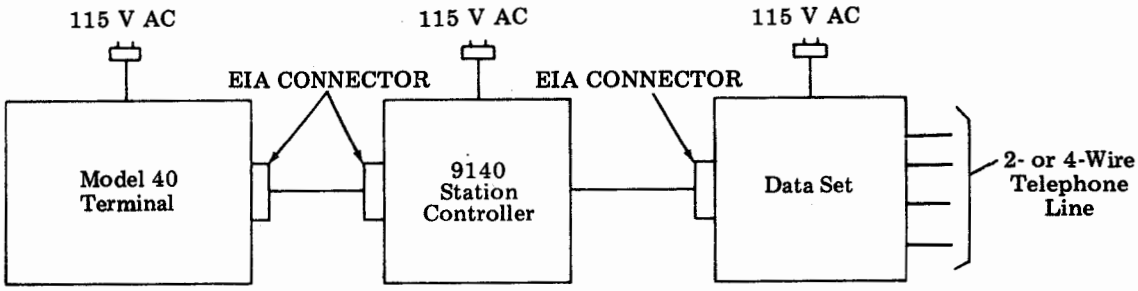

F. STATION ASSEMBLY

Below is an index of procedures that contain assembly instructions for terminal installation. Turn to the appropriate procedure(s) depending on the terminal being installed.

Make sure the Feature and Option Record is properly filled out and stored with the terminal at the time of installation. A sample Feature and Option Record appears on Page 2-95.

INDEX OF PROCEDURES

Procedure 1 -- Pedestal Assembly (Page 25)
Procedure 2 -- Electronics Package Assembly (Electronics Under Monitor or Adjacent for KD and KDPs) (Pages 26 to 33)
Procedure 3 -- Electronics Package Assembly (Electronics in Pedestal for KDPs) (Pages 34 to 38)
Procedure 4 -- Electronics Package Assembly -- ROP (Pages 39 and 40)
Procedure 5 -- Opcon Assembly (Page 40)
Procedure 6 -- Monitor Assembly (Page 41)
Procedure 7 -- Friction Feed Printer Assembly (Page 42 and 43)
Procedure 8 -- Tractor Feed Printer (80- and 132-Column) Assembly (Page 44 and 45)
Procedure 9 -- 9140 Station Controller Assembly (Page 46 and 47)
Procedure 10 -- Option Information (Page 48 to 95)
Procedure 11 -- Cabling (Page 96 to 107)

Procedure 1 -- Pedestal Assembly

Step 1 -- Unpack all cartons following the unpacking instructions on the individual cartons.

Step 2 -- Mount pedestal top to pedestal (four screws with lockwashers).

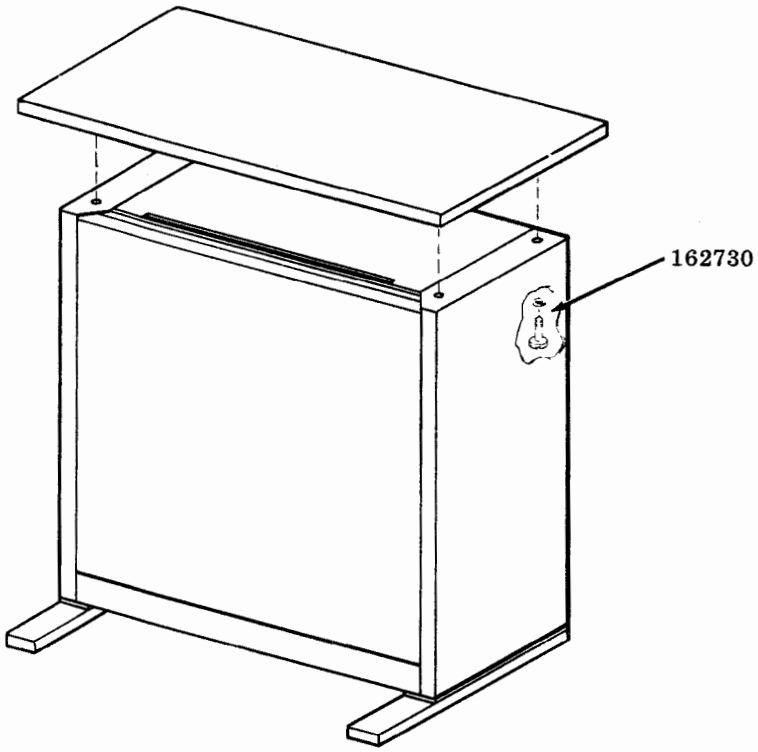

F. STATION ASSEMBLY (Cont)

Procedure 2 -- Electronics Package Assembly (Electronics Under Monitor or Adjacent for KD and KDPs)

If display logic and controller logic are already assembled in the electronics package, proceed with the power supply assembly, Step 19.

Step 1 -- Tilt up cabinet or place over edge of table and remove mounting hardware.

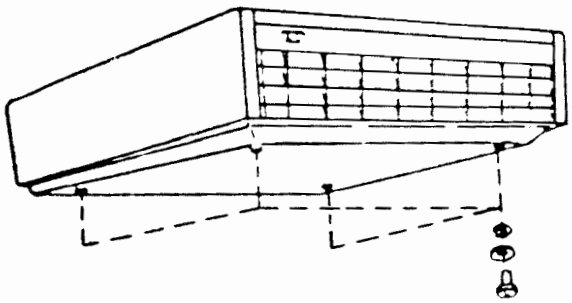

Step 2 -- Open lid.

Step 3 -- Insert fingers as shown and lift. Then pull module forward until it engages the stop.

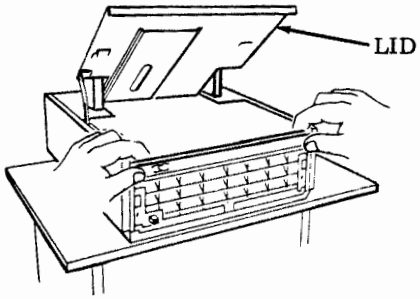

Step 4 -- Insert screwdriver under latch and lift up on latch. Lift up on module and slide forward.

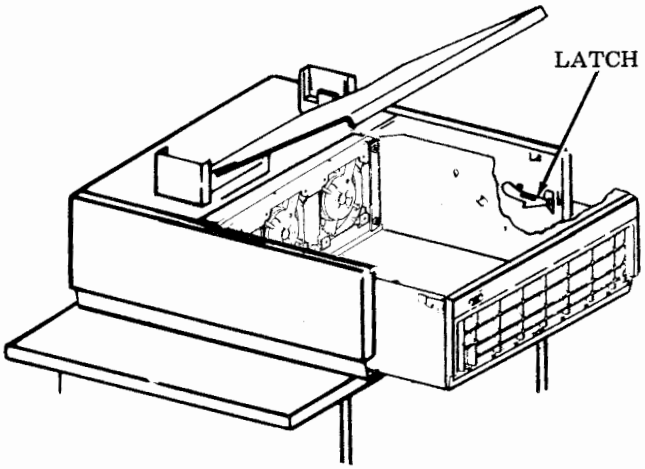

Step 5 -- Reach in and disconnect ac power cable. Slide module completely out of cabinet.

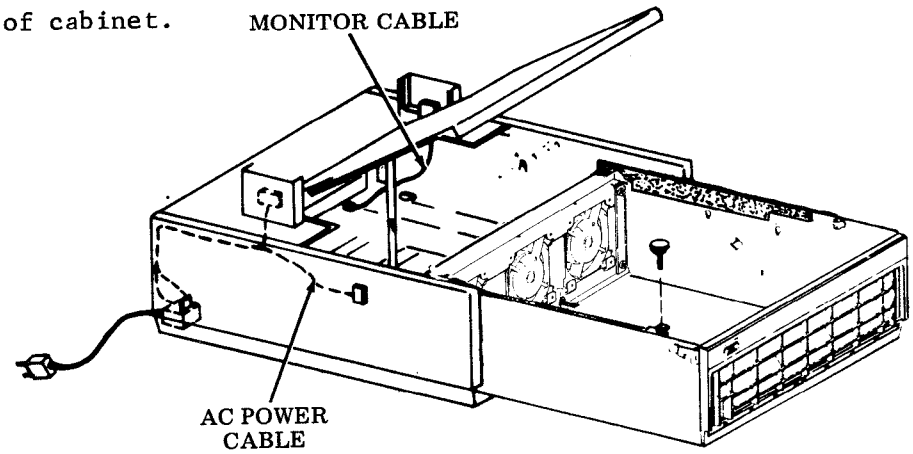

Step 6 -- Remove 408050 ventilation assembly by removing three screws and the flat washer, lockwasher, and nut.

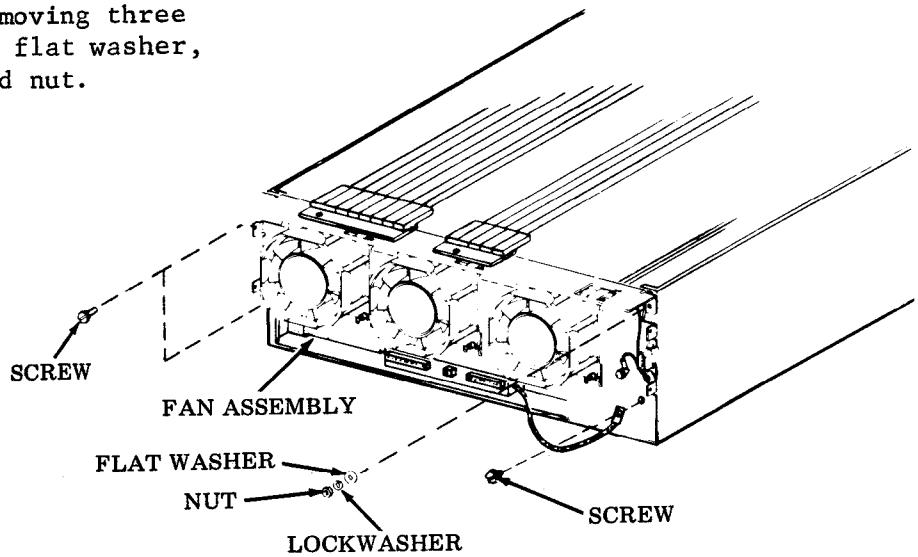

Step 7 -- Check the display logic making sure the cards are seated and properly positioned for called arrangement.

Memory Segment	Full Edit 24 Lines	Full Edit 48 Lines	Full Edit 72 Lines
No. 1	410005	410005	410005
No. 2	None	410005	410005
No. 3	None	None	410005

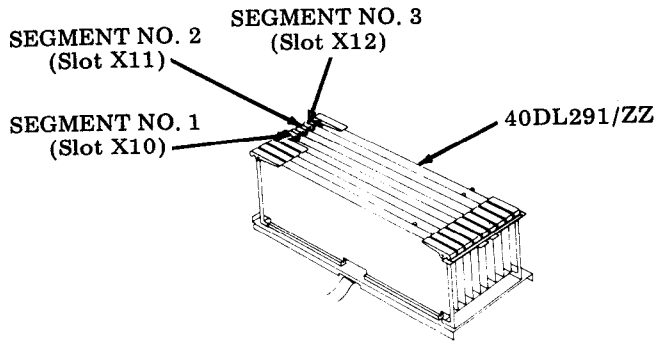

F. STATION ASSEMBLY (Cont)

Procedure 2 -- Electronics Package Assembly (Electronics Under Monitor or Adjacent for KD and KDPs) (Cont)

Step 8 -- Remove muslin bag containing the 341819 shoulder screw used to mount the display logic into the frame and retain for later assembly.

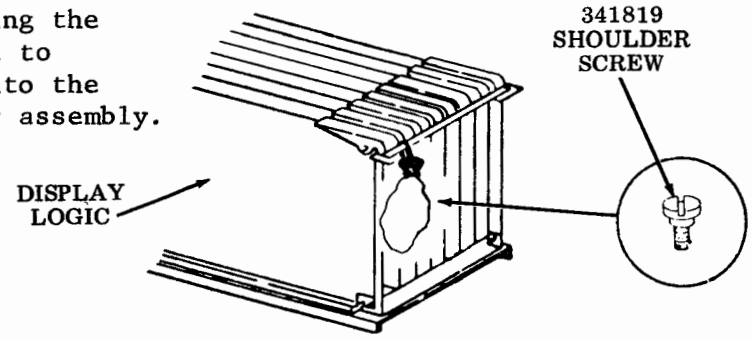

Step 9 -- Install display logic into frame.

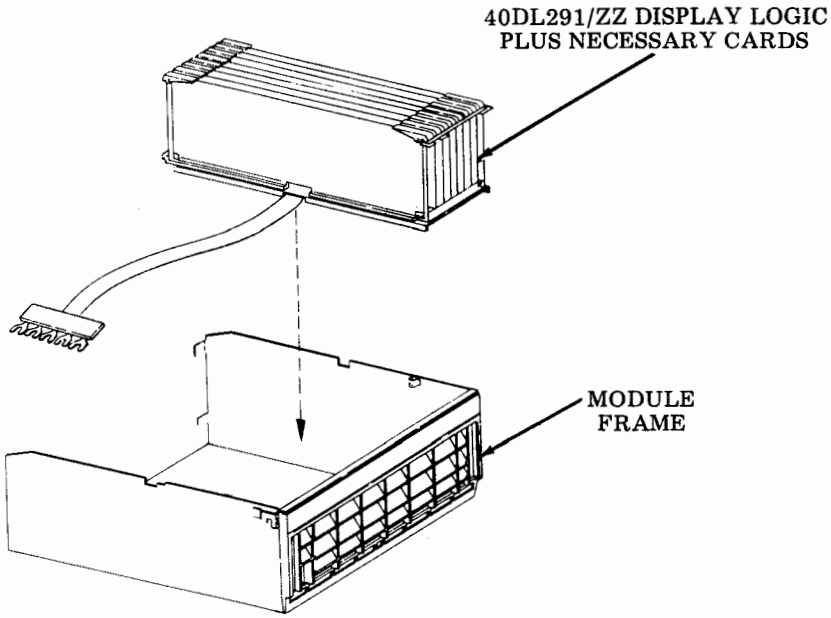

Step 10 -- Position the display logic over the guide in the module frame and route power ribbon cable flat against bottom of module frame to the opposite side.

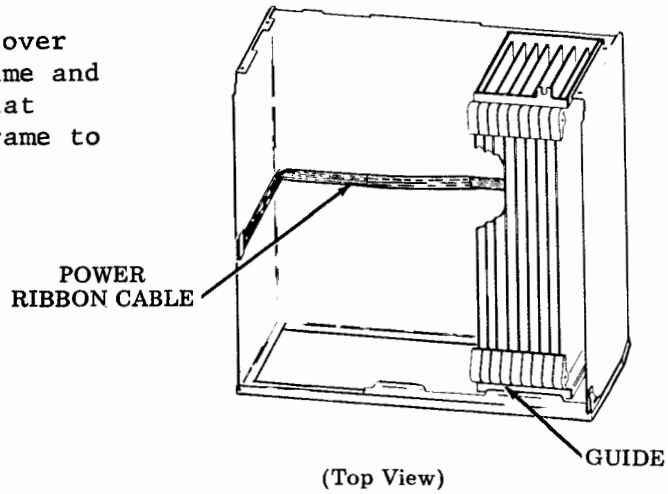

Step 11 -- Remove muslin bag containing 341819 shoulder screw used to mount the controller logic into the frame and retain for later assembly.

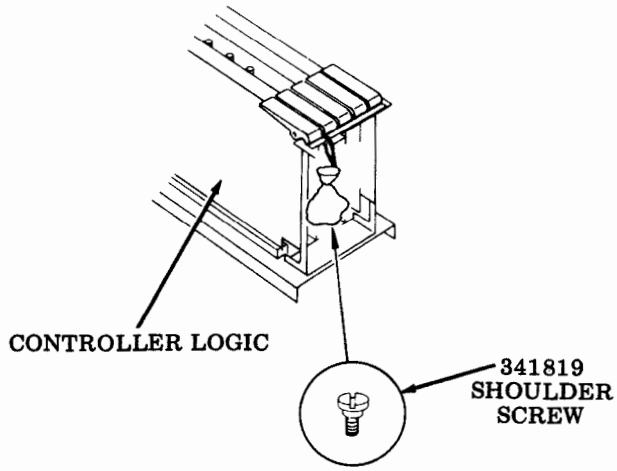

Step 12 -- Install the controller logic into module frame.

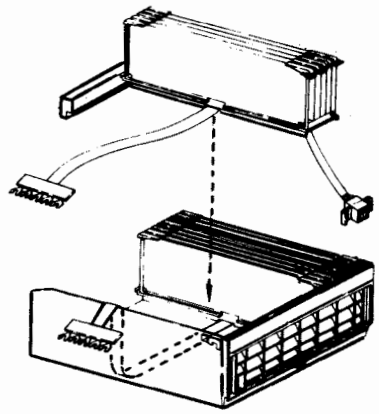

F. STATION ASSEMBLY (Cont)

Procedure 2 -- Electronics Package Assembly (Electronics Under Monitor or Adjacent for KD and KDPs) (Cont)

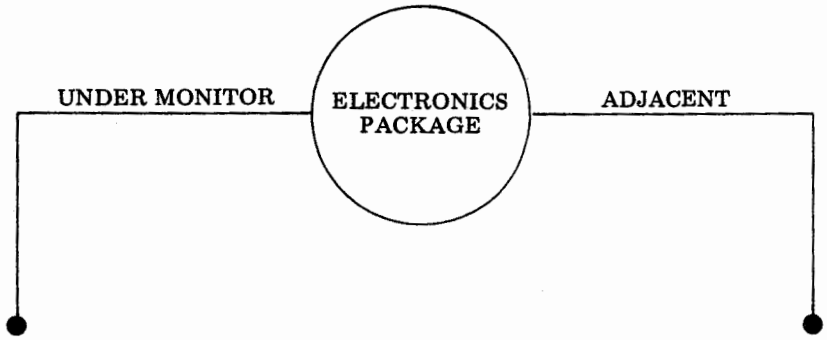

Step 13 -- Position controller bracket over guide in the frame. Route cables as shown (flat cable in center and opcon cable near front of cabinet). Slots in controller must fit over ribbon cable from the display logic.

Position controller bracket over guide in the frame. Route flat cable in center as shown. Slots in controller must fit over ribbon cable from the display logic.

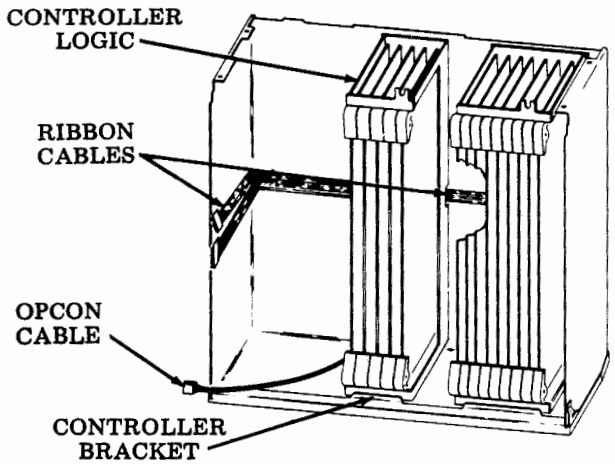

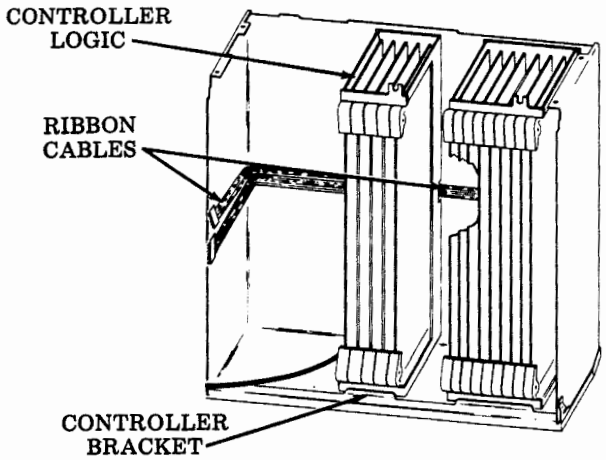

Step 14 -- Install 341740 ribbon cable.

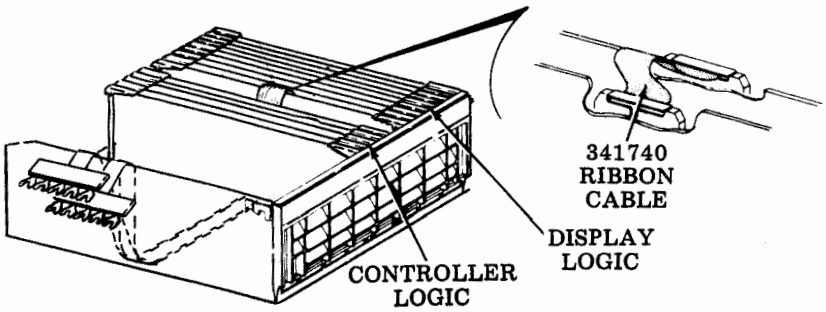

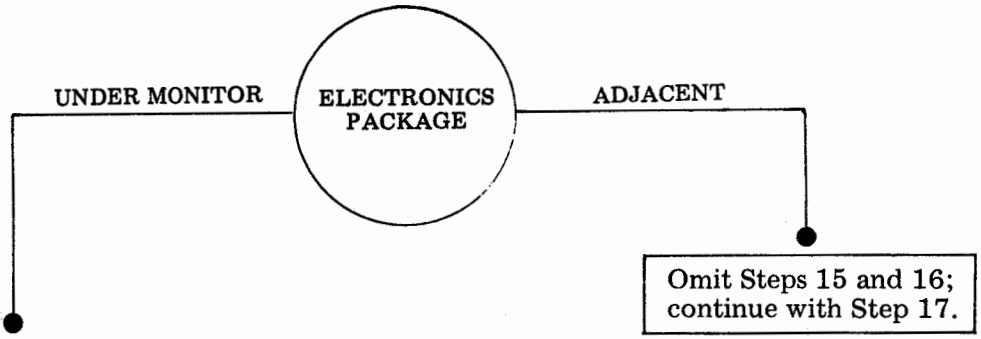

Step 15 -- Route opcon cable in the module so that the cable lies flat against front of the module.

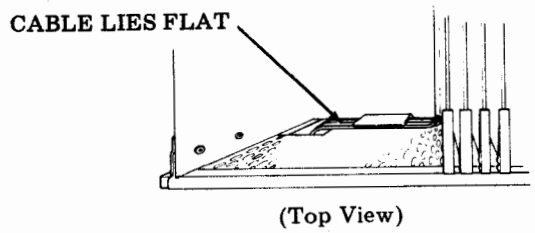

Step 16 -- Insert opcon connector (keys up) into frame. Use retainer plate and hardware (tied in muslin bag to the frame) to clamp opcon cable.

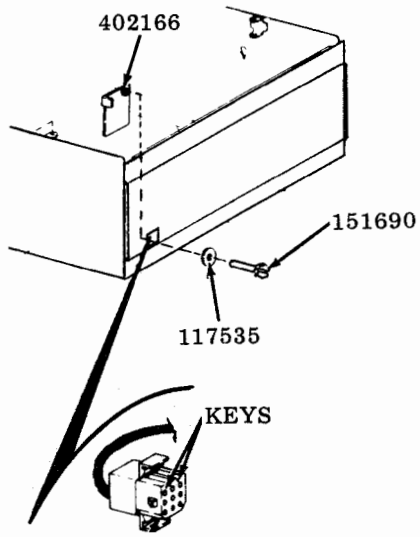

Step 17 -- Install ventilation assembly on the frame using the hardware removed in Step 6. Use notches on logic frames as a guide for alignment. Route ac cable along the inside of frame.

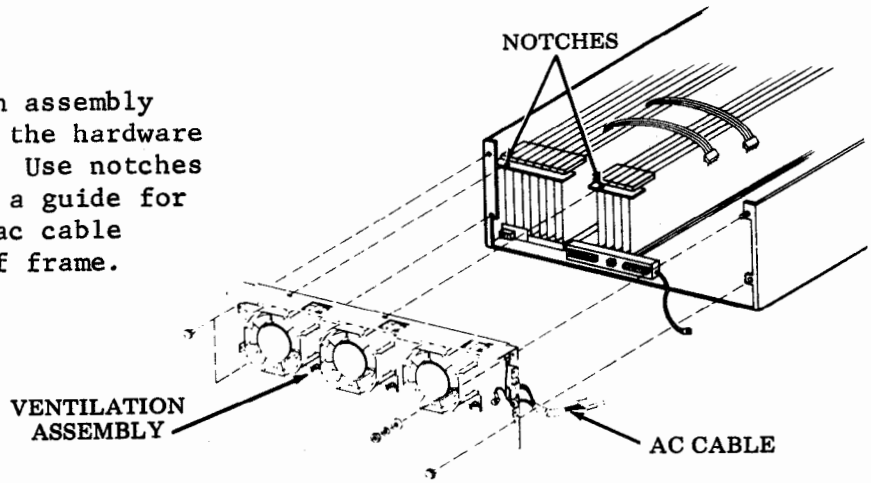

F. STATION ASSEMBLY (Cont)

Procedure 2 -- Electronics Package Assembly (Electronics Under Monitor or Adjacent for KD and KDPs) (Cont)

Step 18 -- Attach the braided ground strap to the slip-on terminal on the ventilation assembly. Align the controllers and tighten screws retained in Steps 8 and 11.

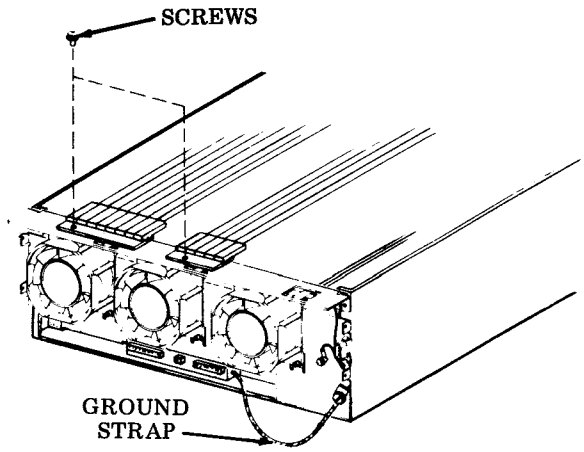

Step 19 -- Mounting the PSU101 Power Supply into module frame:

① Loosen clamp screw and move clamp aside.
② Install power supply through slot and seat onto guide pins.
③ Drop handle.
④ Connect ac plug from ventilation assembly.
⑤ Loosen rear insulator screw and swing insulator aside. Loosen terminal block screws.
⑥ Place display logic cable on terminal strip (flat terminals) and then controller cable (formed terminals) on top. Tighten terminal screws.
⑦ Replace insulator.
⑧ Attach clamp in place over handle and tighten clamp screw.

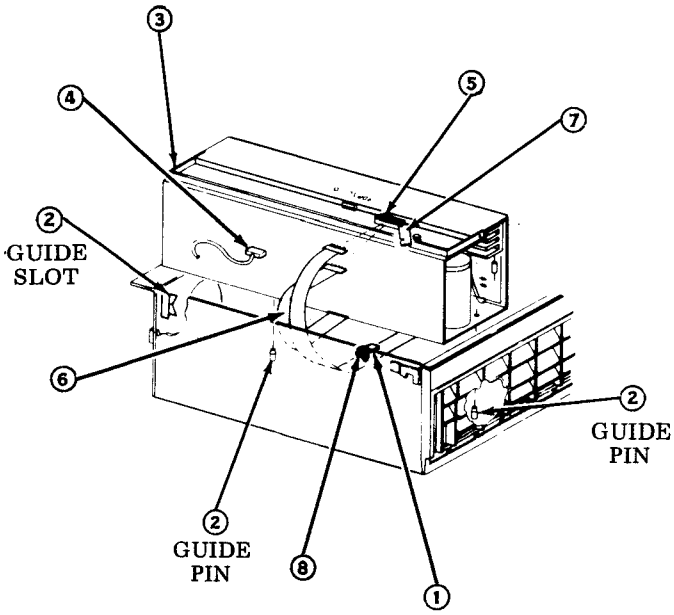

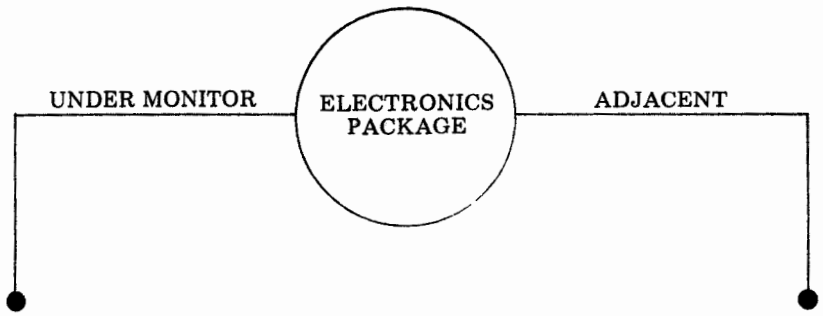

Step 20 -- Cable routing and connections:

① Slide module back into the cabinet far enough to engage the latch on the right side of the cabinet.
② Reach in and connect the ac power cable to the base of ventilation assembly.

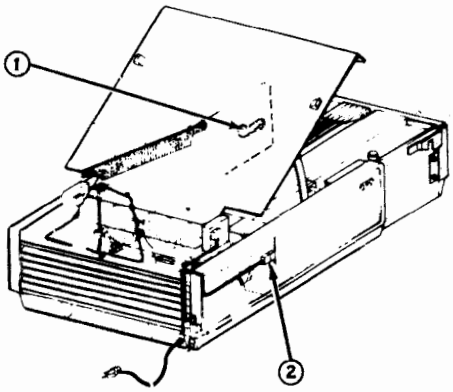

③ Loosen shoulder screw. Slip clip on monitor cable under screw and tighten screws.
④ Connect monitor cable.

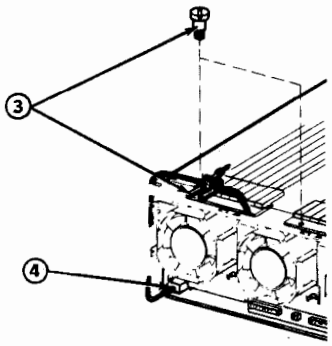

Slide electronics package half way into the cabinet. Connect cable from display logic. Connect power cable at rear of the ventilation assembly.

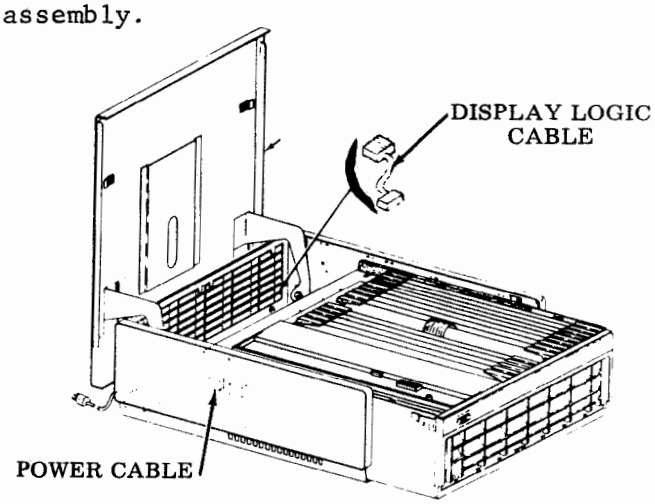

Step 21 -- Slide module back into position. Lift up slightly on module to seat in position.

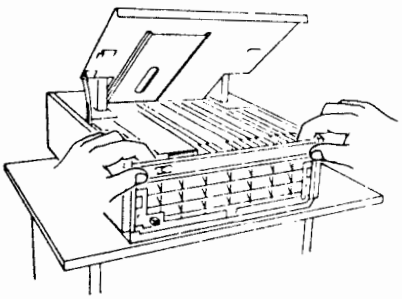

F. STATION ASSEMBLY (Cont)

Procedure 3 -- Electronics Package Assembly (Electronics in Pedestal for KDPs)

If display logic and controller logic are already installed in the electronics package proceed with the power supply assembly, Step 15.

Step 1 -- Slide tabs inward and open panel carefully. Remove two screws and slide module out.

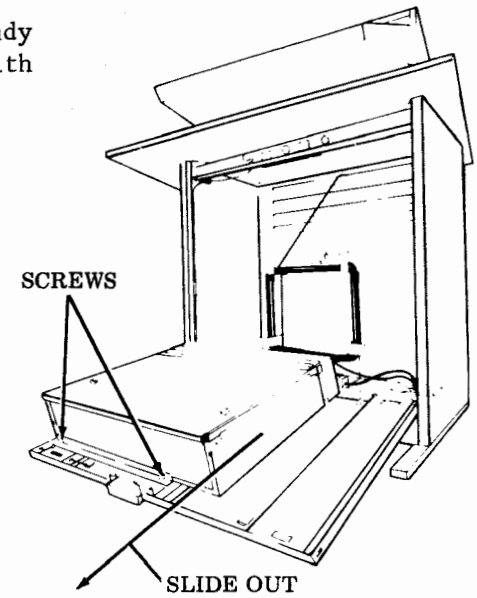

Step 2 -- Remove two captive screws and two rear screws.

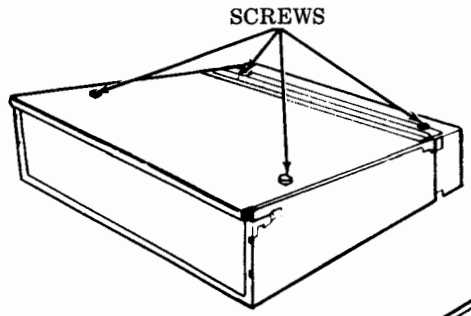

Step 3 -- Remove guard from back of module by removing four screws, flat washers and lockwashers.

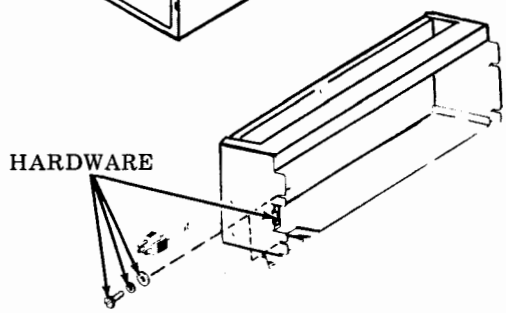

Step 4 -- Remove 408050 ventilation assembly by removing three screws, nut, lockwasher, and flat washer.

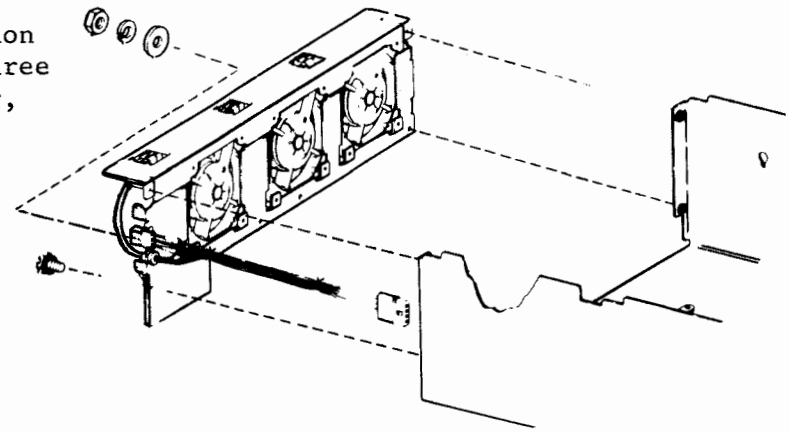

Step 5 -- Check the display logic making sure the cards are seated and properly positioned for called arrangement.

Memory Segment	Full Edit 24 Lines	Full Edit 48 Lines	Full Edit 72 Lines
No. 1	410005	410005	410005
No. 2	None	410005	410005
No. 3	None	None	410005

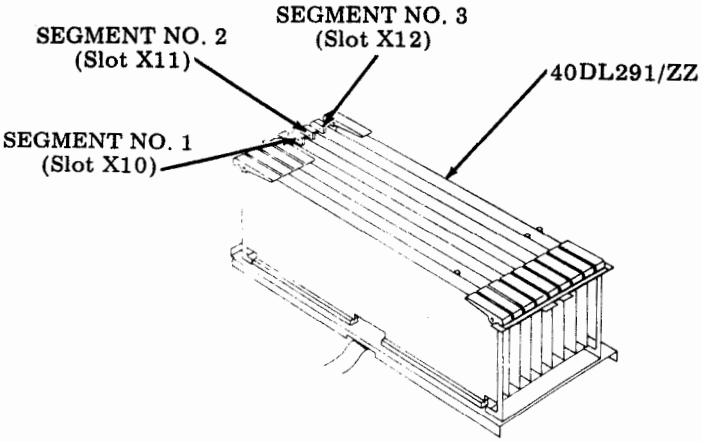

Step 6 -- Remove the muslin bag containing the 341819 shoulder screw used to mount the display logic into frame and retain for later assembly.

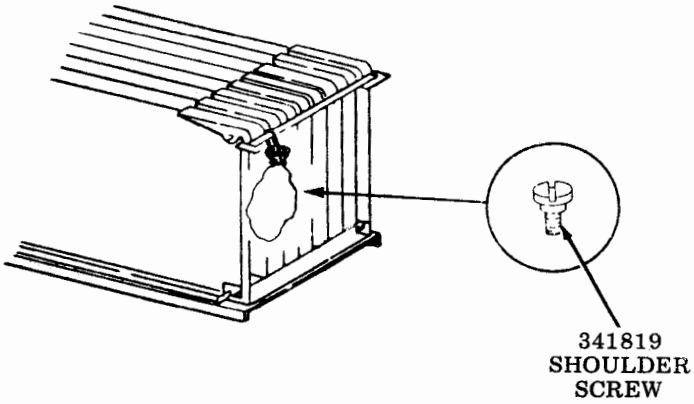

Step 7 -- Install display logic into frame.

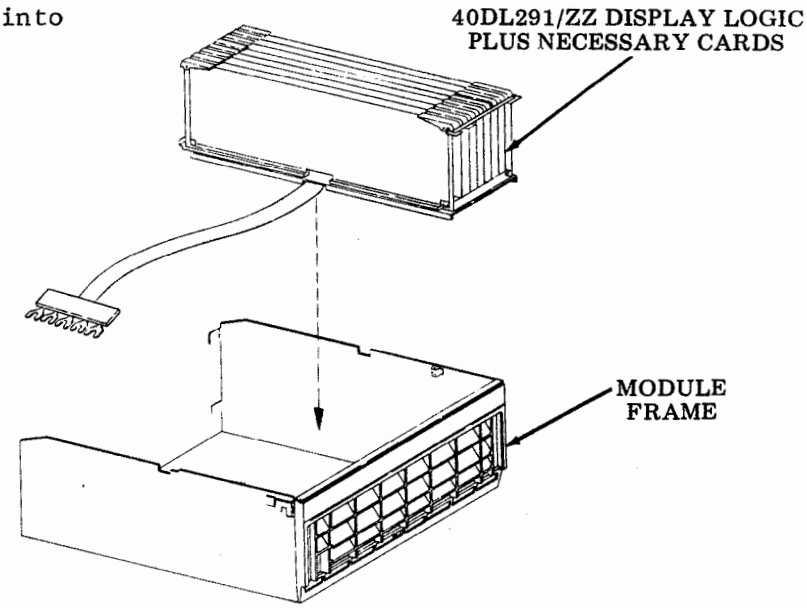

F. STATION ASSEMBLY (Cont)

Procedure 3 -- Electronics Package Assembly (Electronics in Pedestal for KDPs) (Cont)

Step 8 -- Route power ribbon cable flat against bottom of the module frame to the opposite side.

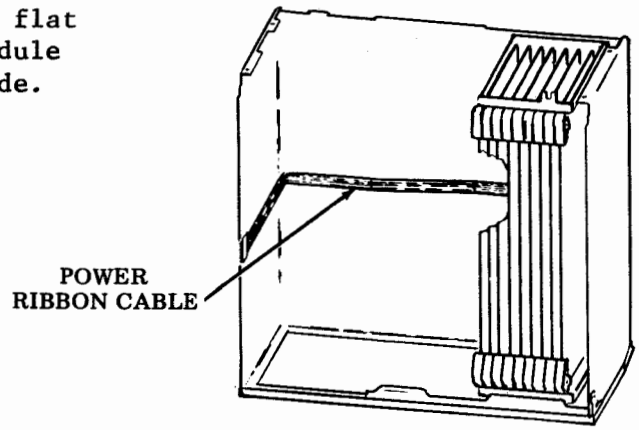

(Top View)

Step 9 -- Remove muslin bag containing 341819 shoulder screw used to mount the controller logic into frame and retain for later assembly.

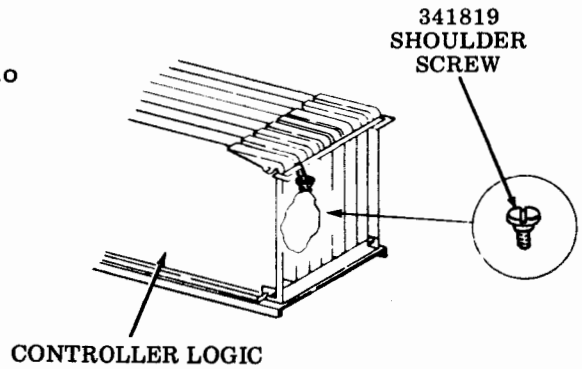

Step 10 -- Install controller logic into module frame.

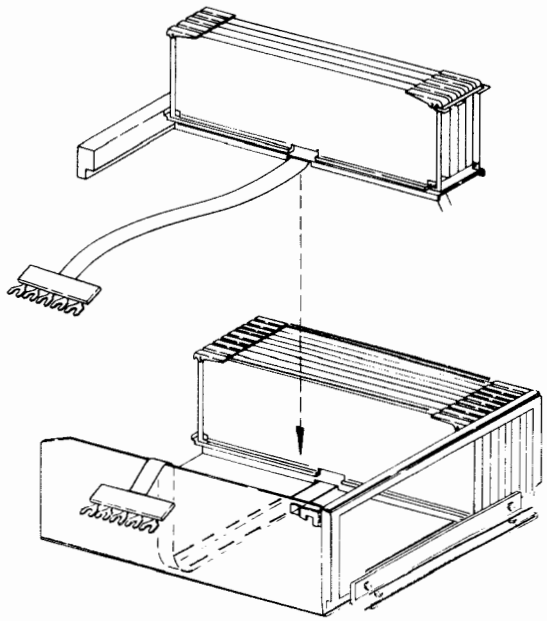

Step 11 -- Route cables as shown. Slots in controller must fit over ribbon cable from display logic.

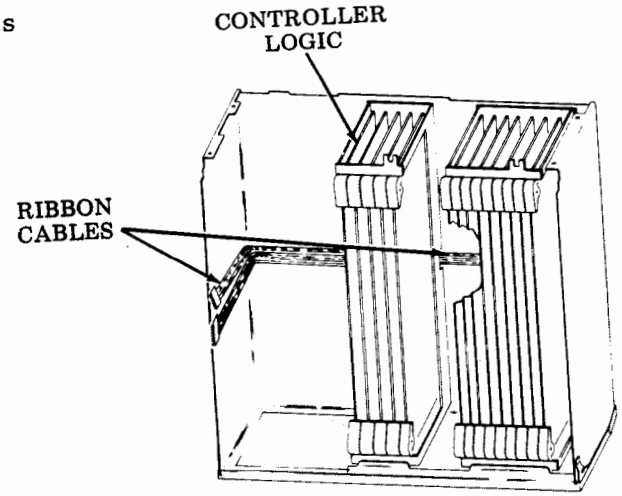

Step 12 -- Install 341740 ribbon cable.

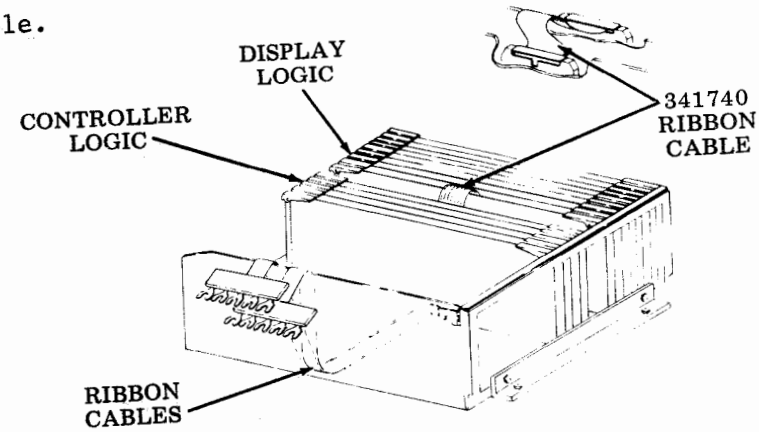

Step 13 -- Install ventilation assembly on the frame using the hardware removed in Step 4. Use notches on logic frames as a guide for alignment. Route ac cable along the inside of frame.

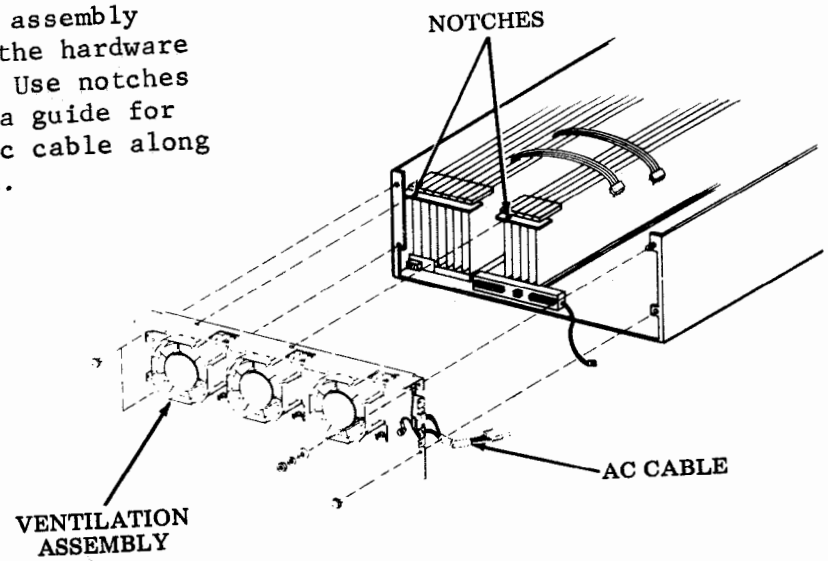

F. STATION ASSEMBLY (Cont)

Procedure 3 -- Electronics Package Assembly (Electronics in Pedestal for KDPs) (Cont)

Step 14 -- Attach the braided ground strap to the slip-on terminal on the ventilation assembly. Align controllers and tighten screws retained in Steps 6 and 9.

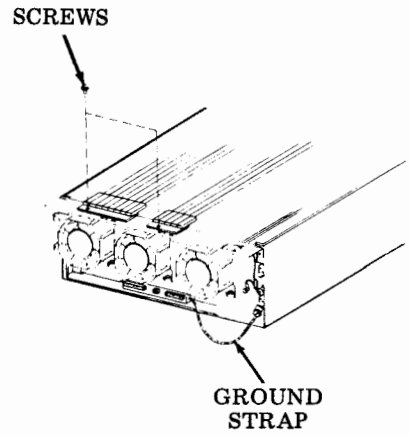

Step 15 -- Mounting the PSU101 Power Supply into module frame:

① Install power supply through slot and seat onto guide pins.
② Drop handle.
③ Connect plug from ventilation assembly.
④ Loosen rear insulator screw and swing insulator aside.
Loosen terminal block screws.
⑤ Place display logic on terminal strip (flat terminals) and then controller cable (formed terminals) on top.
Tighten terminal screws.
⑥ Replace insulator.

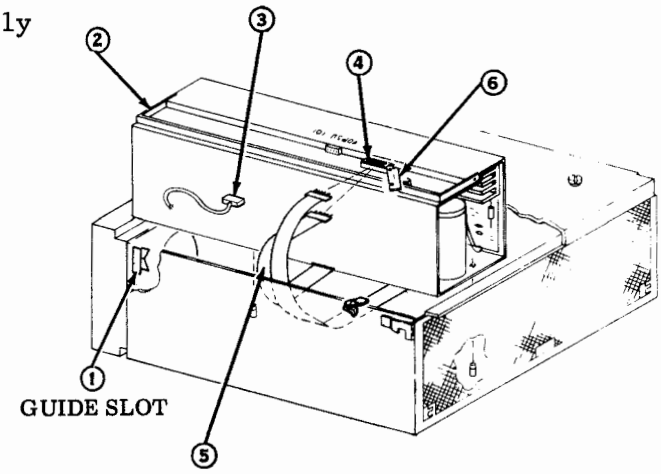

Step 16 -- Complete installation by reversing Steps 3, 2 and 1.

Procedure 4 -- Electronics Package Assembly -- ROP

Step 1 -- Slide tabs inward and open panel carefully. Remove two screws and slide module out.

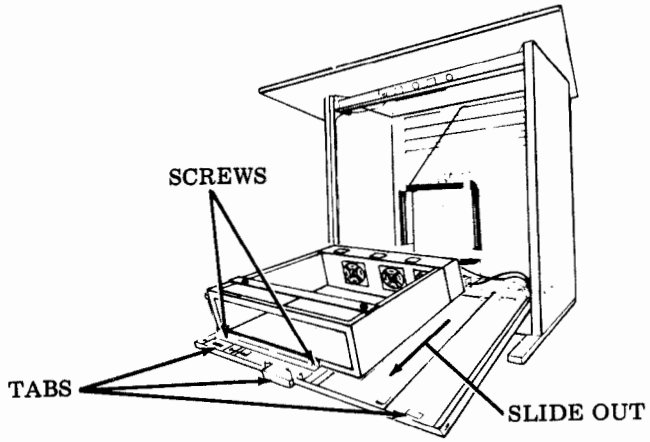

Step 2 -- Loosen 401676 screw, remove 401688 thumbscrew and swing bar aside out of the way.

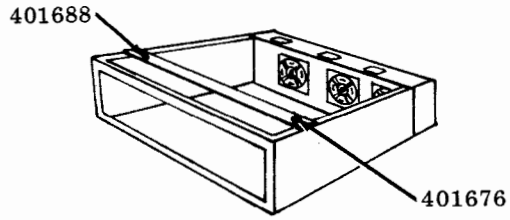

Step 3 -- Install 401643 controller cable to bottom of module using two 119648 retaining rings. Install cable bracket to ventilation assembly with two 198670 screws. Route cables as shown.

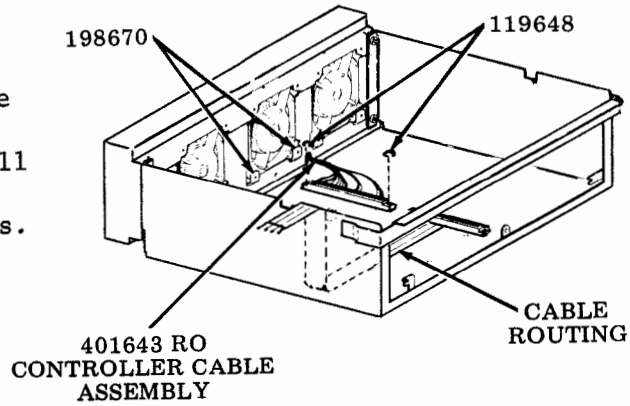

NOTE: If assembling a station with components of different vintages, then Power Supply/Monitor compatibility must be checked. Page 9-1, 403594 modification kit.

Step 4 -- Locate the controller logic and power supply over their locator pins and seat. Connect ac plug from ventilation assembly.

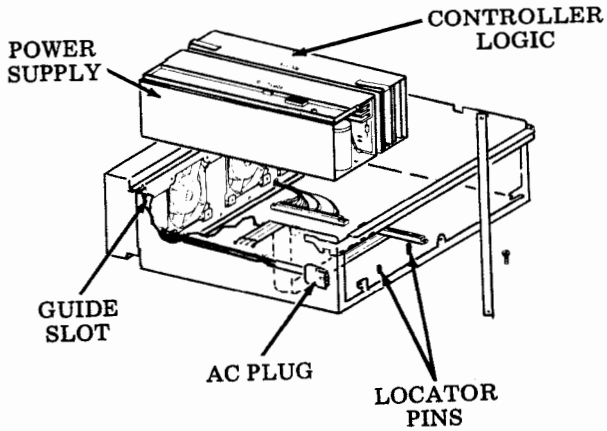

F. STATION ASSEMBLY (Cont)

Procedure 4 -- Electronics Package Assembly -- ROP (Cont)

Step 5 -- Loosen insulator screw and swing insulator aside. Mount ribbon cables and strap to terminal block. Replace insulator. Tighten screw.

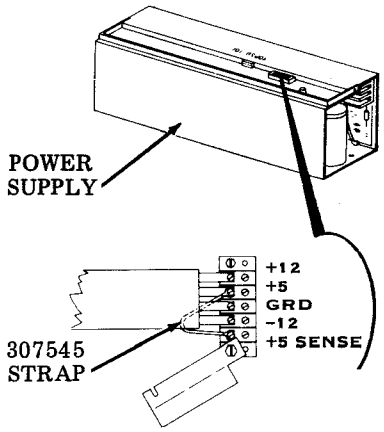

Step 6 -- Complete installation by reversing Step 2 and then Step 1.

Procedure 5 -- Opcon Assembly

Remove packing clips before assembly.

Step 1 -- Assembly procedures for RO, KD, and KDP opcon are the same:

- Align connectors.
- Engage latches.
- Slide latches all the way up.
- Check that opcon is secure before releasing it.

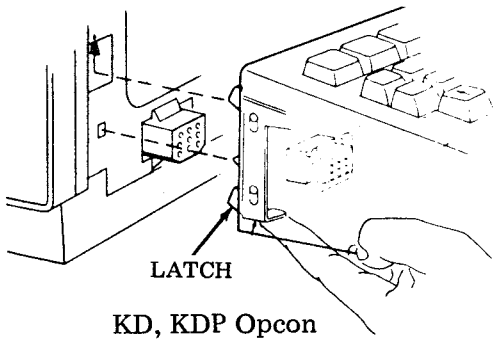

KD, KDP Opcon

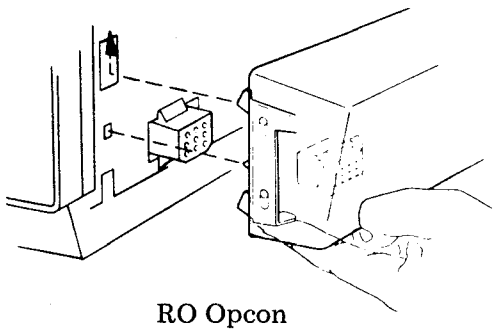

RO Opcon

Step 2 -- Install CAPS LOCK or the blocking keytop (both provided in plastic bag) on opcon:

- If all caps are required, depress plunger and install blocking keytop.
- If upper and lower case is being used, install CAPS LOCK key.

CAUTION: IF CAPS LOCK KEY IS TO BE REMOVED AT A LATER DATE, REFER TO PART 7 -- COMPONENT ACCESS FOR CAUTIONS ON REMOVING IT.

Procedure 6 -- Monitor Assembly

NOTE: If assembling a station with components of different vintage, then Power Supply/Monitor compatibility must be checked. See Page 9-1, 403594 modification kit.

Step 1 --

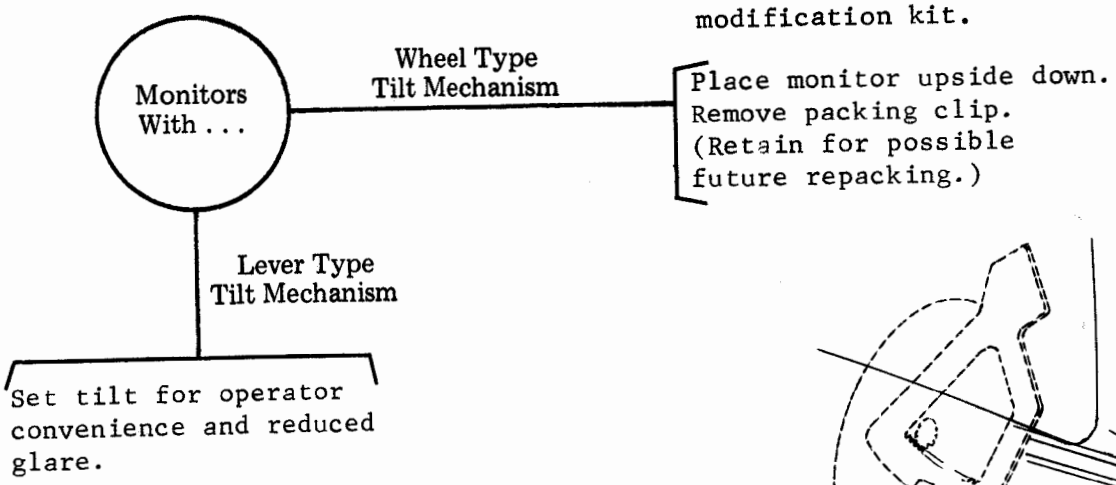

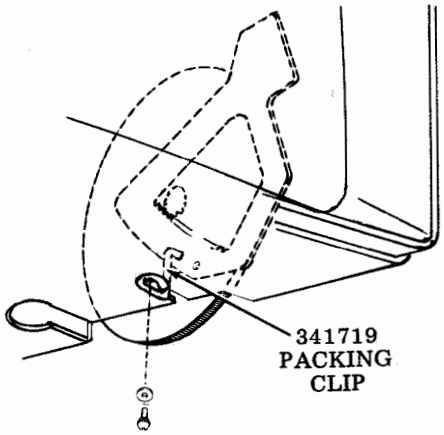

Step 2 -- Install bottom plate to underside of monitor:

- Push studs until they snap into place.

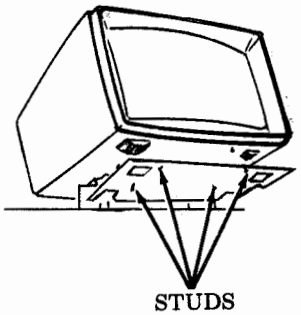

Step 3 -- Grasp monitor securely from the rear and mount it into the two cabinet posts:

- Monitor slides over the posts freely -- there is no locking device.
- Make sure connectors inside the posts are positioned fully.

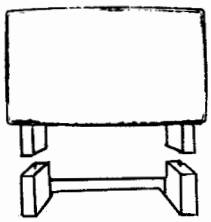

F. STATION ASSEMBLY (Cont)

Procedure 7 -- Friction Feed Printer Assembly

Shipping bar is under heavy spring tension.

RELEASE CAREFULLY

CAUTION

Step 1 -- Remove shipping latch and bar. Discard. If printer is to be shipped at a later date, retain bar and latch.

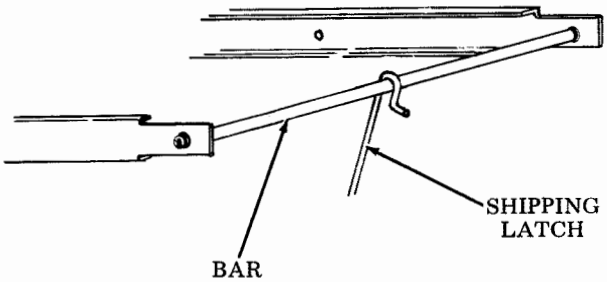

Step 2 -- Slide printer into track:

- Make sure ac and SSI cables are not pinched.
- Make sure detents snap into place.

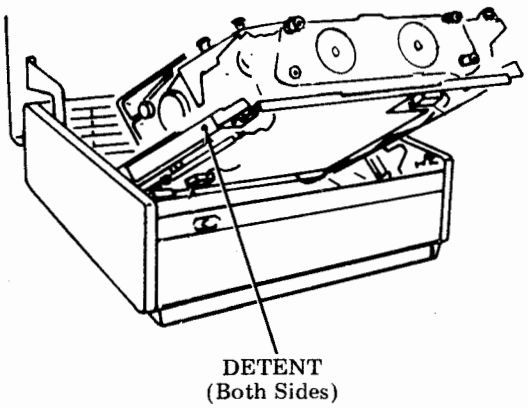

Step 3 -- Connect ac power cable and SSI cable.

Step 4 -- Connect interlock cable at right rear corner of cabinet.

Step 5 -- Install carrier.

Step 6 -- Install ribbon.

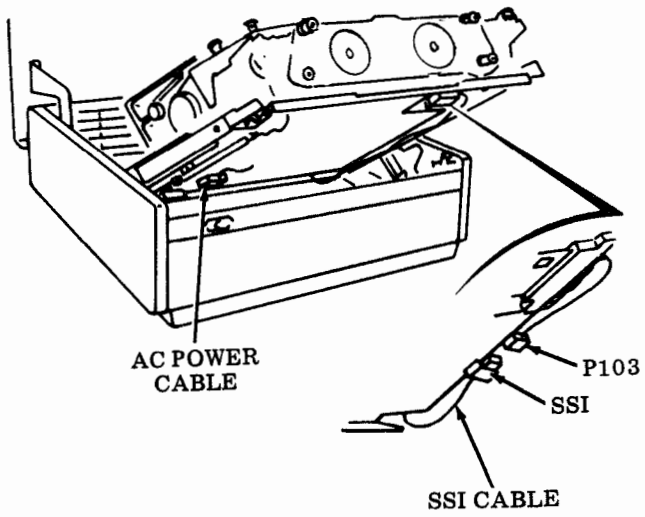

Step 7 -- Option the 410640 card:

- To avoid damage to the card, wear the approved 346392 static discharge strap before handling it. Avoid touching components on the card as much as possible.
- Option 410640 card (see Pages 2-62 and 2-67 for option information).
- Reinstall card after optioning.

Attach static ground strap tightly to wrist as shown.

Attach clip end of static discharge strap to frame ground.

Step 8 -- Lower printer and install paper.

- Before inserting paper in paper chute make a sharp crease on the paper as shown.

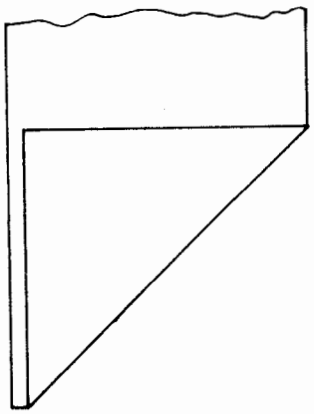

F. STATION ASSEMBLY (Cont)

Procedure 8 -- Tractor Feed Printer (80- and 132-Column) Assembly

Step 1 -- Loosen four immobilizing screws a minimum of four turns until base rides freely on the shock mounts.

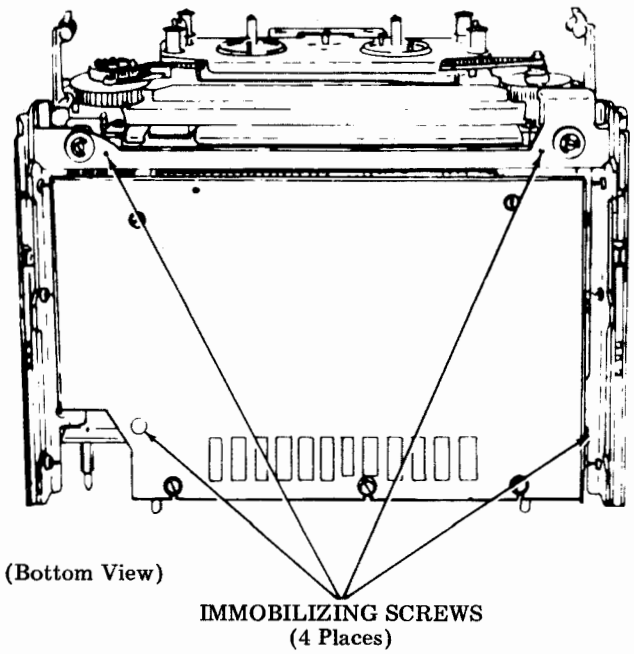

Step 2 -- Option printer card per system requirements:

80-Column

- Install ground strap as shown.
- Remove circuit card and option it (Pages 2-62 to 2-67 for option information).
- Reinstall card.

132-Column

- Option card by positioning appropriate switches at bottom of printer. (See Pages 2-62 to 2-67 for option information.)
  (It is not necessary to remove 410729 card.)

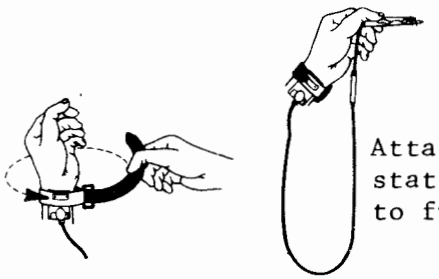

Attach clip end of static discharge strap to frame ground.

Attach static ground strap tightly to wrist as shown.

Step 3 -- Slide printer in place:

- Make sure two latches on either side are fully engaged.
- Make sure three connectors at rear of printer are fully seated.

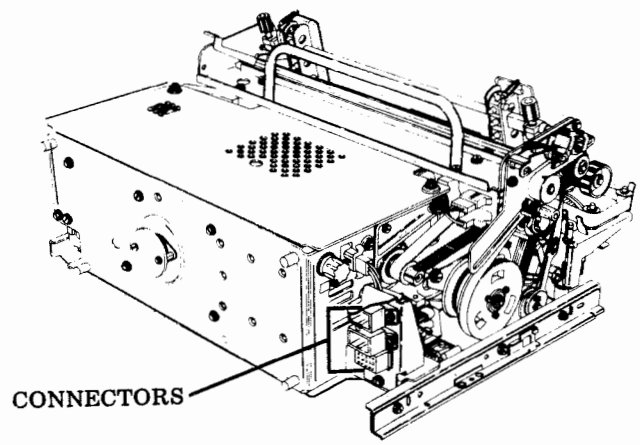

Step 4 -- Install paper forms:

- Make sure forms are loaded in front of the mylar strips on both sides.
- Position form-out lever for proper form out.
- Do not position the form into the tractors at this point. Ribbon has to be installed first.

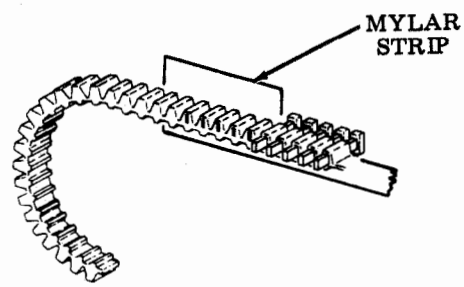

Step 5 -- Install ribbon. See decal on printer cover for proper routing.

F. STATION ASSEMBLY (Cont)

Procedure 9 -- 9140 Station Controller Assembly

Step 1 -- Assemble 345605 mounting frame and power supply, and the 9140 Station Controller.

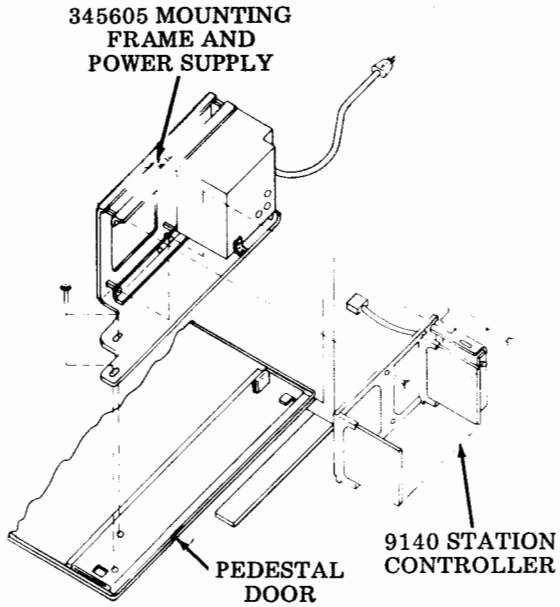

Step 2 -- Route the cables along mounting support, and plug the "N" connector into "JN" connector on power supply.

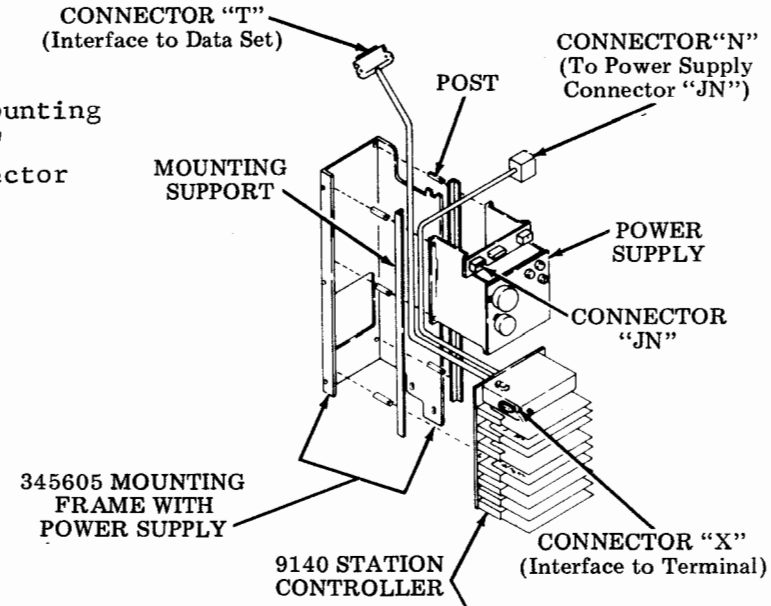

Step 3 -- Install 322083 circuit card in position G.

Step 4 -- Remove circuit card in position A. Install either 1200 baud timer (303839) or 1050 baud timer (303805) on circuit card removed from position A. Install circuit card back into position A.

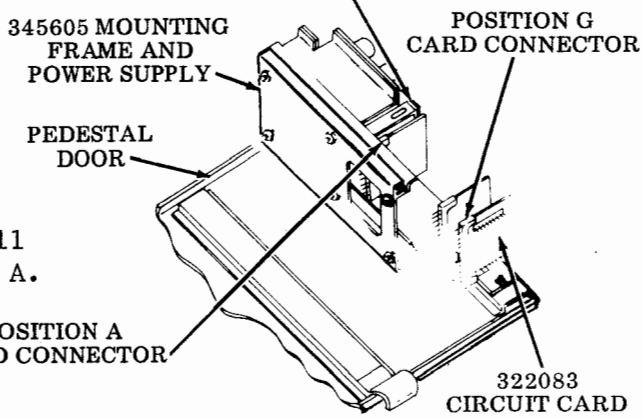

Perform Steps 5 through 7 only if 345625 alarm/parity response modification kit is used.

<u>Step 5</u> -- Install 345626 alarm assembly to 345601 mounting frame with two 198670 screws with lockwashers.

<u>Step 6</u> -- Install 322641 answer-back and alarm circuit card on 322083 circuit card in position G.

<u>Step 7</u> -- Route the cable of 345626 alarm assembly between mounting posts and 345601 mounting frame. Slip the terminal of the red wire on pin B35 of card connector in position E. Slip the terminal of the black wire on pin B33 of card connector in position G.

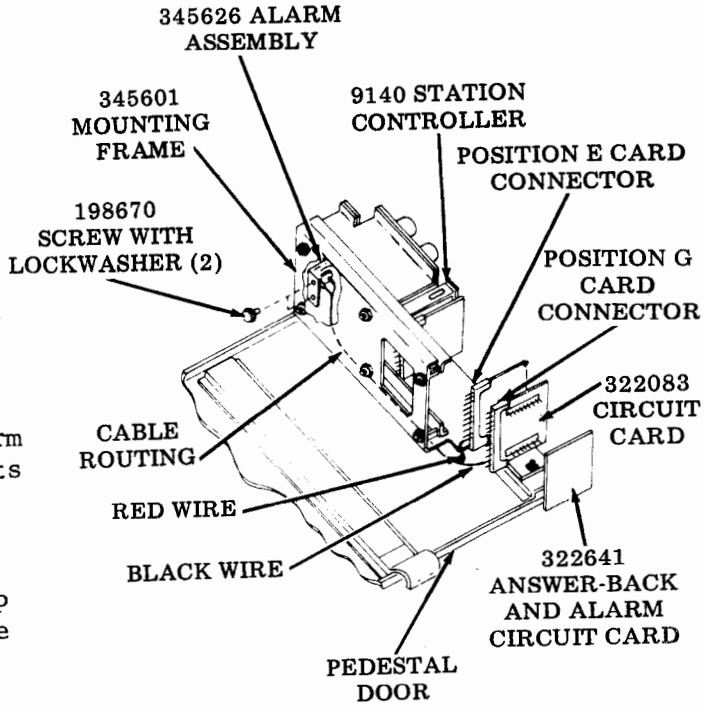

<u>Step 8</u> -- Remove cable clamp, if present, from right side of pedestal door.

<u>Step 9</u> -- Install entire 9140 Station Controller assembly with 345605 mounting frame and power supply on pedestal door. Slide the slot at rear of 345601 mounting frame under the mounting tab on the door. Secure the frame with two 185871 screws with lockwashers. (Circuit cards in positions G and F may have to be removed to gain access to one of the holes.)

<u>Step 10</u> -- Connect ac power cord to an <u>unswitched</u> receptacle.

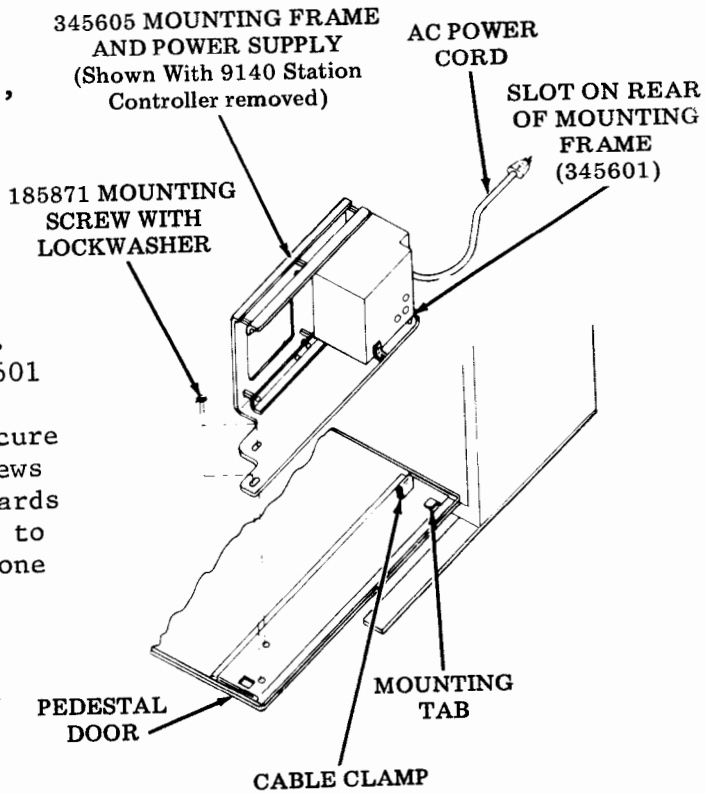

F. STATION ASSEMBLY (Cont)

Procedure 10 -- Option Information

a. All numbers associated with the options are assigned and apply only to that option.
b. Turn off all power to the station.
c. Locate the circuit card that contains the option to be activated. (A complete list of options available can be found on the Station Features and Options Record.) The location of all circuit cards with options can be found in PART 7 -- COMPONENT ACCESS of this manual.
d. Remove circuit card.
e. Locate the proper option switch or screw and activate as required.
f. Return the circuit card or circuit card book to its proper location.
g. Turn on station power.
h. Perform a checkout of the station to verify proper operation of the option.

Method of Presenting Options:

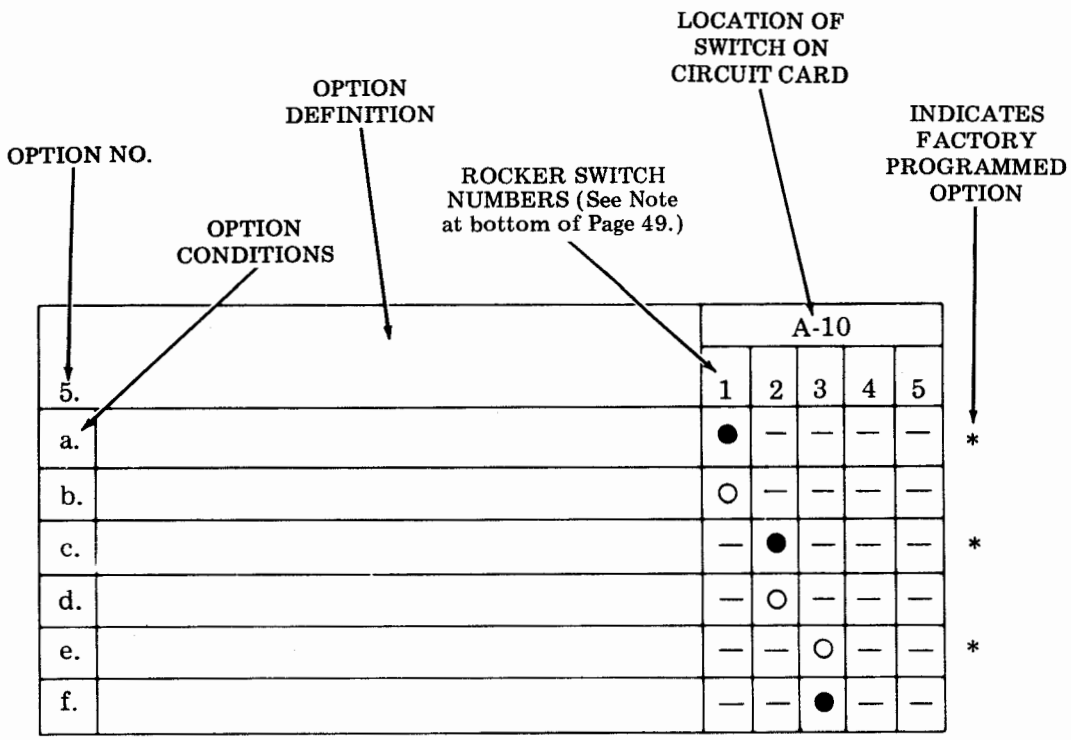

● Indicates dot end of rocker switch depressed.
○ Indicates blank end of rocker switch depressed.
— Switch position does not affect option.
* Factory programmed.

Option switches on circuit cards in the controller and display logic are addressed with the number "1" switch being towards the board top.

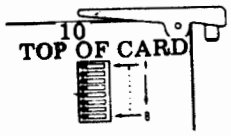

Printer cards are addressed as in illustrations Ⓐ and Ⓑ.

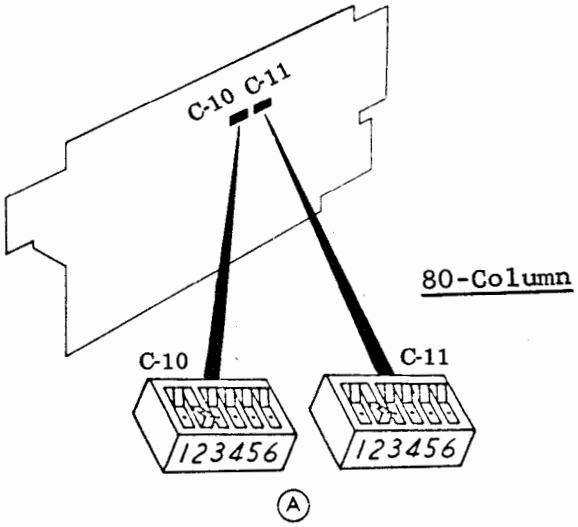

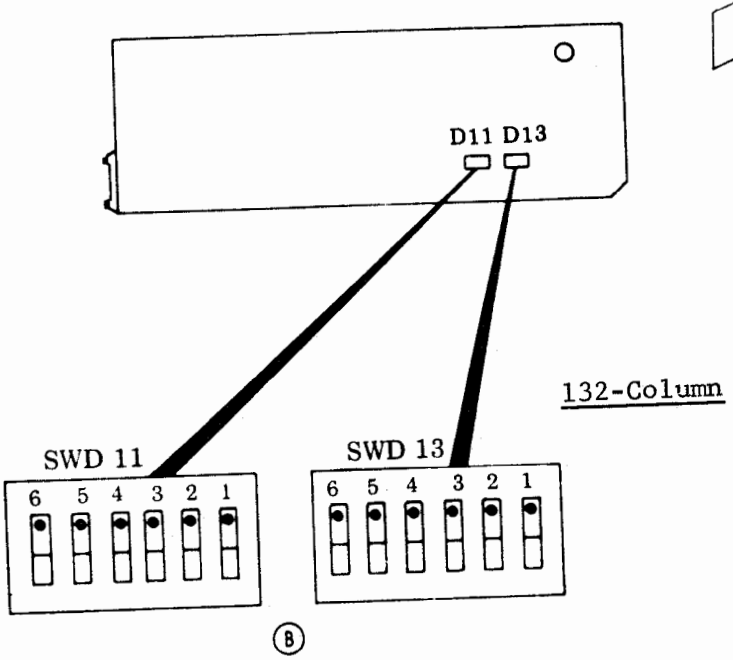

NOTE: A number of different switches have been used to option cards. Illustrations show rocker switches, illustration Ⓒ, and toggle switches, illustration Ⓓ, and their respective ON/OFF positions.

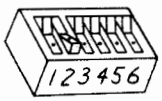

Ⓒ
ROCKER SWITCH

Dot End Depressed - Switch ON

Blank End Depressed - Switch OFF

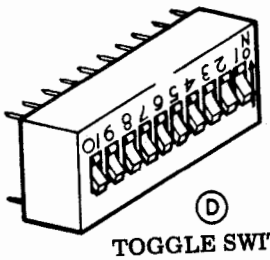

Ⓓ
TOGGLE SWITCH

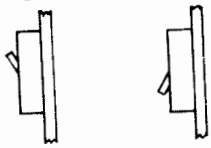

F. STATION ASSEMBLY (Cont)

Procedure 10 -- Option Information (Cont)

Options for 40/1, 40/2, and 40/3

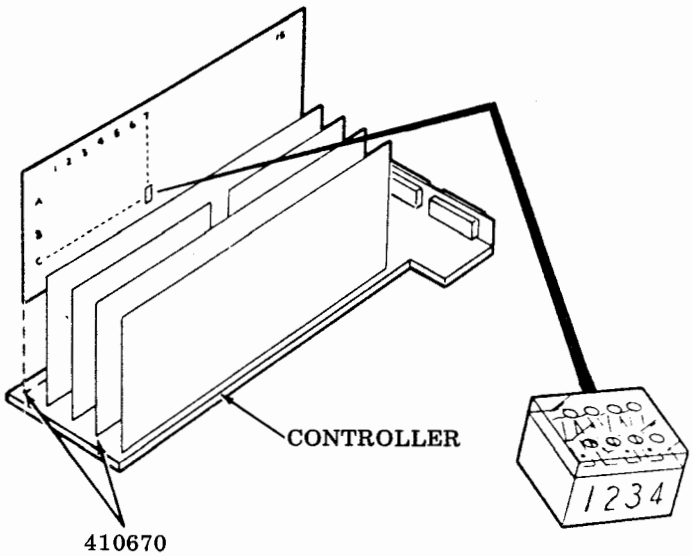

NOTE: Option 28 also uses this switch.

40/1

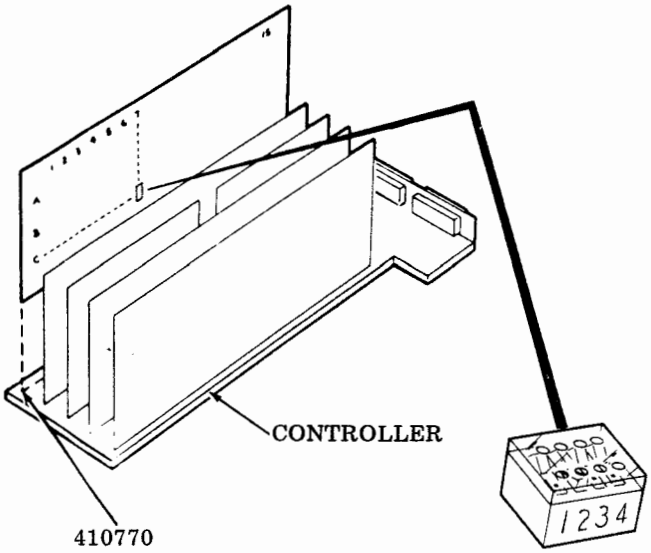

NOTE: Options 28 and 29 also use this switch.

40/2 and 40/3

410670 -- S/R, PTR, and Disconnect Circuit Card Options (40/1)

1. Interface to Printer		C-7				
		1	2	3	4	
a.	EIA	○	—	●	—	
b.	SSI	●	—	○	—	*

410770 -- Independent Printer Access Circuit Card (40/2 and 40/3)

1. Interface to Printer		C-7					
		1	2	3	4	5	
a.	EIA	○	●	—	—	—	
b.	SSI	●	○	—	—	—	*

● Indicates dot end of rocker switch depressed (or on).
○ Indicates blank end of rocker switch depressed (or off).
— Position of rocker switch does not affect option.
* Factory programmed.

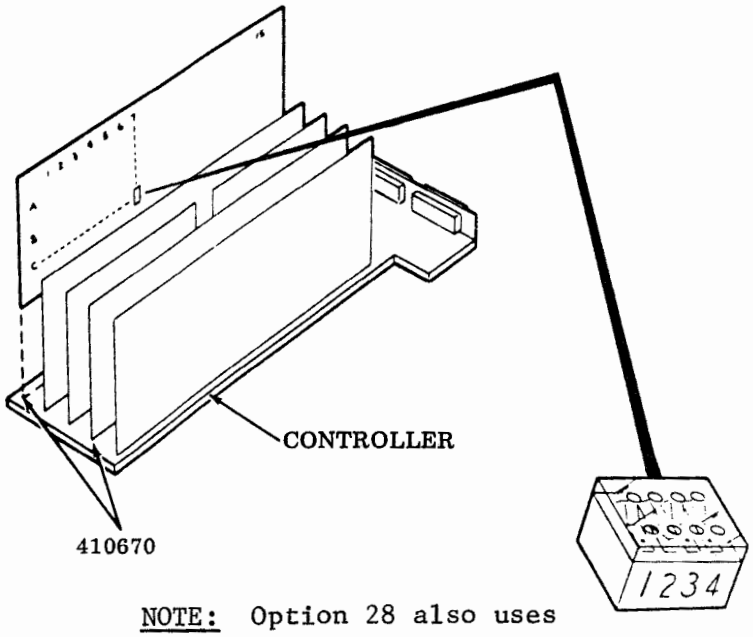

NOTE: Option 28 also uses this switch.

410670 -- S/R, PTR, and Disconnect Circuit Card Options
(40/1 only; no Option 2 for 40/2 or 40/3)

2.	S/R Send	C-7				
		1	2	3	4	
a.	DC2 Sent Auto	—	●	—	—	*
b.	DC2 Sent W/Message	—	O	—	—	

● Indicates dot end of rocker switch depressed (or on).
O Indicates blank end of rocker switch depressed (or off).
— Position of rocker switch does not affect option.
* Factory programmed.

F. STATION ASSEMBLY (Cont)

Procedure 10 -- Option Information (Cont)

Options for 40/1, 40/2, and 40/3 (Cont)

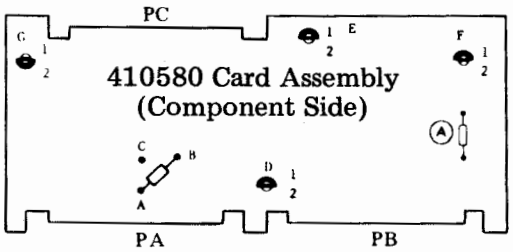

Early Issue 7A

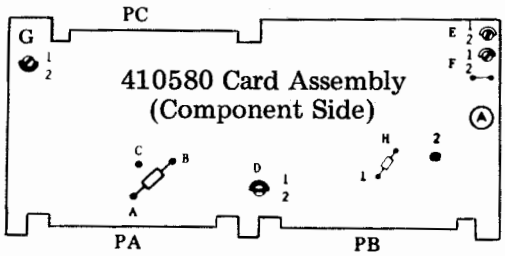

Late Issue 7B

410580 (In ROP Controller 40C103/ -- Component Side)

3.	EIA/Send/Receive Data Baud Rate	Insulator D Position	Insulator E Position	
a.	1050	1	2	
b.	1200	1	1	*

*Factory programmed.

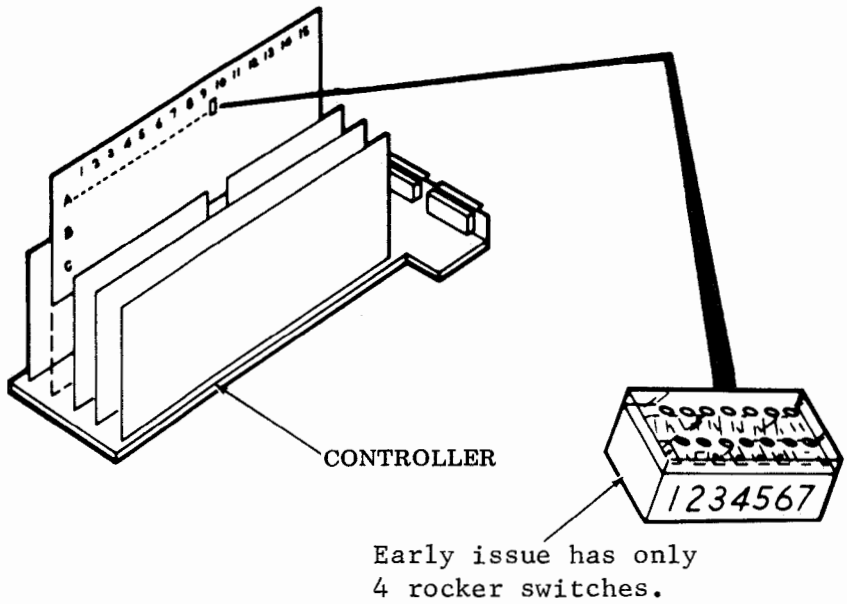

410671 (Issue 4A and higher) -- EIA Interface Circuit Card Options (40/1 only)

3.	EIA Send/Receive Data Baud Rate	A-10							
		1	2	3	4	5	6	7	
a.	1050	●	○	○	—	—	—	—	
b.	1200	○	●	○	—	—	—	—	*
c.	2400 (See Note)	—	—	—	—	—	—	—	

NOTE: 2400 Baud operation is reserved for future use.

● Indicates dot end of rocker switch depressed.
○ Indicates blank end of rocker switch depressed.
— Position of rocker switch does not affect option.
* Factory programmed.

F. STATION ASSEMBLY (Cont)

Procedure 10 -- Option Information (Cont)

Options for 40/1, 40/2, and 40/3 (Cont)

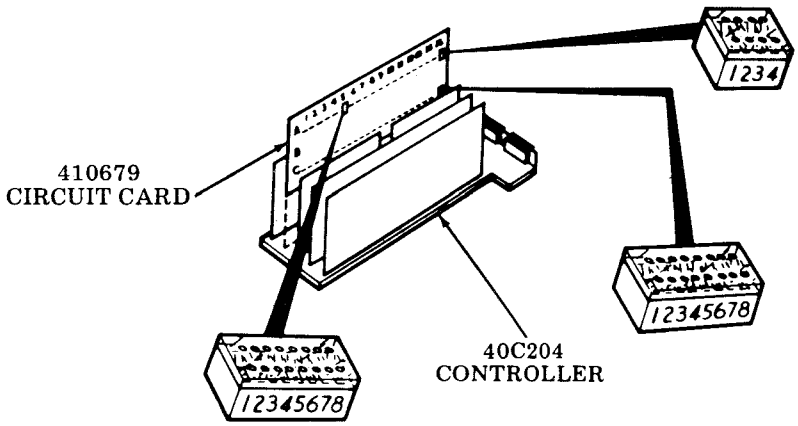

410679 -- Full Duplex Interface Circuit Card (40/2 only)

3.	EIA Send/Receive Data Baud Rate	C-17								A-17				
		1	2	3	4	5	6	7	8	1	2	3	4	
a.	1050 Baud (Not Used)	—	—	—	—	—	—	—	—	—	—	—	—	
b.	1200 Baud	—	●	●	●	○	○	○	○	—	—	●	—	*
c.	2400 Baud	—	●	●	○	○	○	○	○	—	—	●	—	
d.	1800 (Not Used)	—	—	—	—	—	—	—	—	—	—	—	—	
e.	2100 (Not Used)	—	—	—	—	—	—	—	—	—	—	—	—	
f.	4800 Baud	—	●	○	○	○	○	○	○	—	—	●	—	
g.	600 Baud	—	●	●	●	●	○	○	○	—	—	●	—	
h.	300 Baud	—	●	●	●	●	●	○	○	—	—	●	—	
i.	150 Baud	—	●	●	●	●	●	●	○	—	—	●	—	
j.	110 Baud (See Note)	—	●	●	●	○	●	○	●	—	—	○	—	

NOTE: Switch A-17 Number 3 is normally open, except when a ROP is being used in a KD-RO arrangement EIA, then this switch should be closed.

● Indicates dot end of rocker switch depressed.
○ Indicates blank end of rocker switch depressed.
— Position of rocker switch does not affect option.
* Factory programmed.

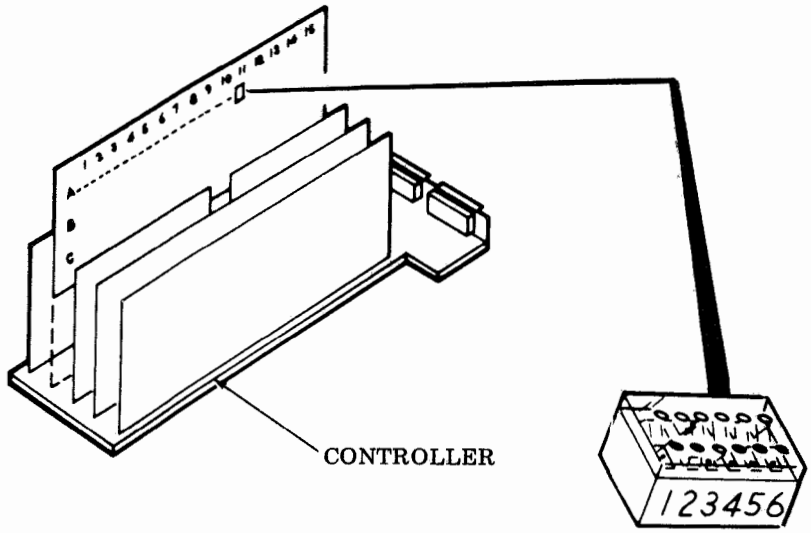

NOTE 1: Options 30, 31, 32, 33, 34 and 37 are also located on this circuit card.

410771 -- 9140 Interface Circuit Card Options (40/3 only)

3.	EIA Send/Receive Data Baud Rate	A11						
		1	2	3	4	5	6	
a.	1050	—	●	●	●	●	—	
b.	1200	—	●	○	○	●	—	*
c.	2400 (See Note 2)	—	○	●	○	○	—	
d.	1800 (For Future Use)	—	●	●	○	○	—	

NOTE 2: 2400 Baud operation is reserved for future use.

● Indicates dot end of rocker switch depressed.
○ Indicates blank end of rocker switch depressed.
— Position of rocker switch does not affect option.
* Factory programmed.

F. STATION ASSEMBLY (Cont)

Procedure 10 -- Option Information (Cont)

Options for 40/1, 40/2, and 40/3 (Cont)

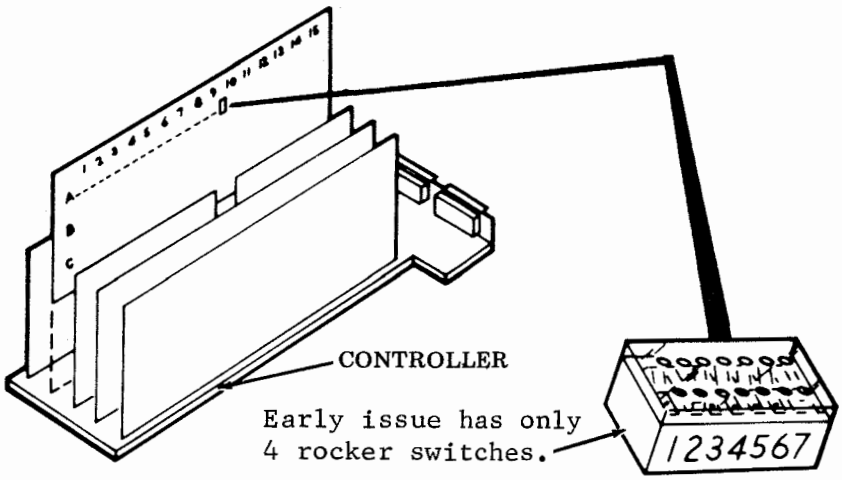

410671 (Issue 4A and higher) -- EIA Interface Circuit Card Options (40/1 only)

		A-10							
4.	EIA Reverse Channel	1	2	3	4	5	6	7	
a.	Reverse Channel Required to Send	—	—	—	●	—	—	—	*
b.	Reverse Channel Not Required to Send	—	—	—	O	—	—	—	

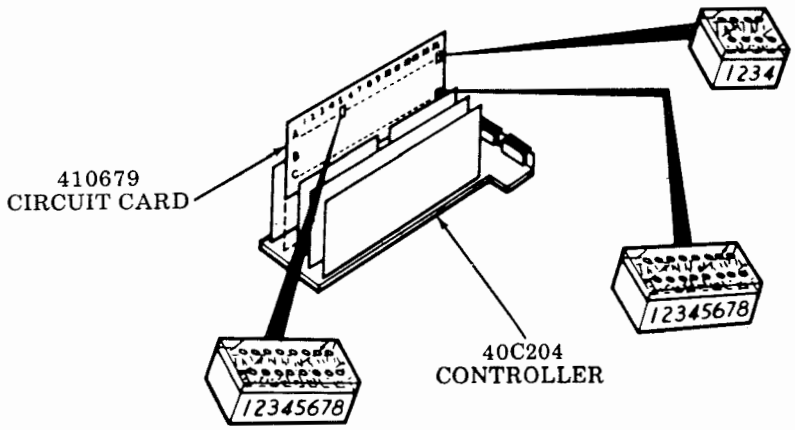

410679 -- Full Duplex Interface Circuit Card (40/2 only)

		A-5								C-17								A-17				
4.	EIA Reverse Channel	1	2	3	4	5	6	7	8	1	2	3	4	5	6	7	8	1	2	3	4	
a.	Reverse Channel Required to Send (202 Type Only)	●	–	–	–	–	–	–	–	–	–	–	–	–	–	–	–	–	–	–	–	*
b.	Reverse Channel Not Required to Send (103 Type)	O	–	–	–	–	–	–	–	–	–	–	–	–	–	–	–	–	–	–	–	

● Indicates dot end of rocker switch depressed.
O Indicates blank end of rocker switch depressed.
– Position of rocker switch does not affect option.
* Factory programmed.

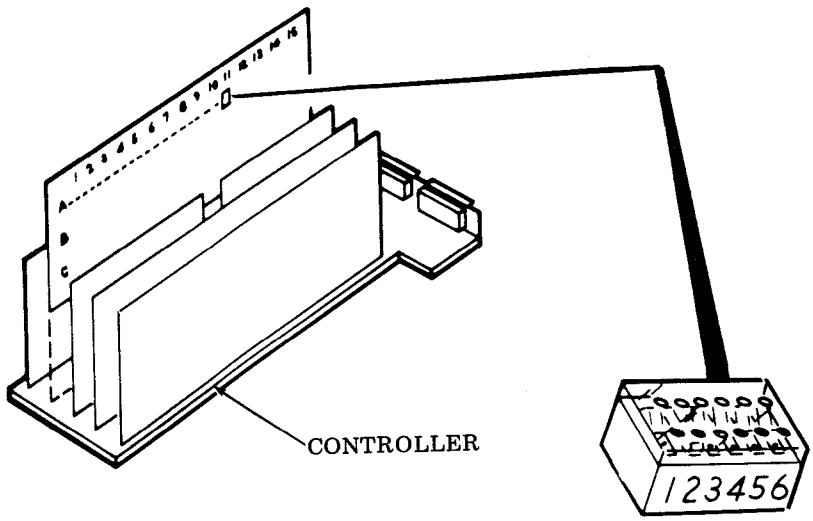

NOTE: Options 30, 31, 32, 33, 34, and 37 are also located on this circuit card.

410771 -- 9140 Interface Circuit Card Options (40/3 only)

		A11						
4.	EIA Reverse Channel	1	2	3	4	5	6	
a.	Reverse Channel Required to Send	●	—	—	—	—	—	
b.	Reverse Channel Not Required to Send	O	—	—	—	—	—	*

● Indicates dot end of rocker switch depressed.
O Indicates blank end of rocker switch depressed.
— Position of rocker switch does not affect option.
* Factory programmed.

F. STATION ASSEMBLY (Cont)

Procedure 10 -- Option Information (Cont)

Options for 40/1, 40/2, and 40/3 (Cont)

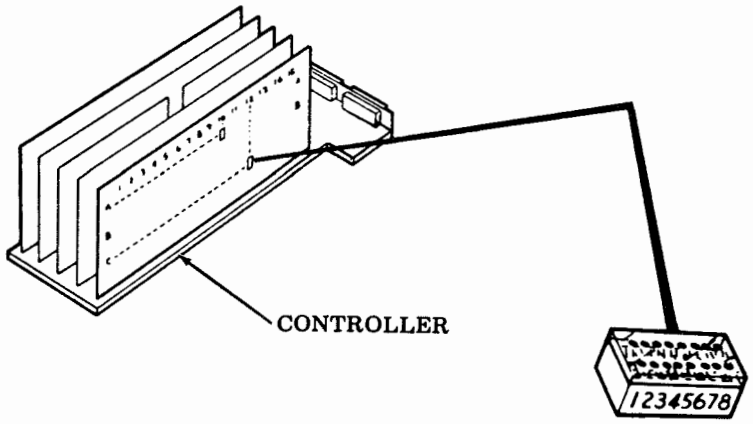

410674 -- Data Bus and Decode Circuit Card

5.	Response to Received Characters	A-10					C-12								
		1	2	3	4	5	1	2	3	4	5	6	7	8	
a.	Reject Null	●	—	—	—	—	—	—	—	—	—	—	—	—	*
b.	Accept Null	○	—	—	—	—	—	—	—	—	—	—	—	—	
c.	Reject CR	—	●	—	—	—	—	—	—	—	—	—	—	—	*
d.	Accept CR	—	○	—	—	—	—	—	—	—	—	—	—	—	
e.	Reject Delete	—	—	●	—	—	—	—	—	—	—	—	—	—	*
f.	Accept Delete	—	—	○	—	—	—	—	—	—	—	—	—	—	
g.	Reject DC_1 (See Note)	—	—	—	—	—	—	—	—	—	—	●	—	—	*
h.	Accept DC_1 (See Note)	—	—	—	—	—	—	—	—	—	—	○	—	—	
i.	Reject DC_3 (See Note)	—	—	—	—	—	—	—	—	—	—	—	●	—	*
j.	Accept DC_3 (See Note)	—	—	—	—	—	—	—	—	—	—	—	○	—	

NOTE: Applies to Issues 4B and later of the 410674 circuit card.

6.	Functions on Receive	A-10					C-12								
		1	2	3	4	5	—	—	—	—	—	—	—	—	
a.	All Escape Sequences Displayed as Received	—	—	—	○	—	—	—	—	—	—	—	—	—	
b.	All Escape Sequences are Performed as Received but Not Displayed	—	—	—	●	--	—	—	—	—	—	—	—	—	*

● Indicates dot end of rocker switch depressed.
○ Indicates blank end of rocker switch depressed.
— Position of rocker switch does not affect option.
* Factory programmed.

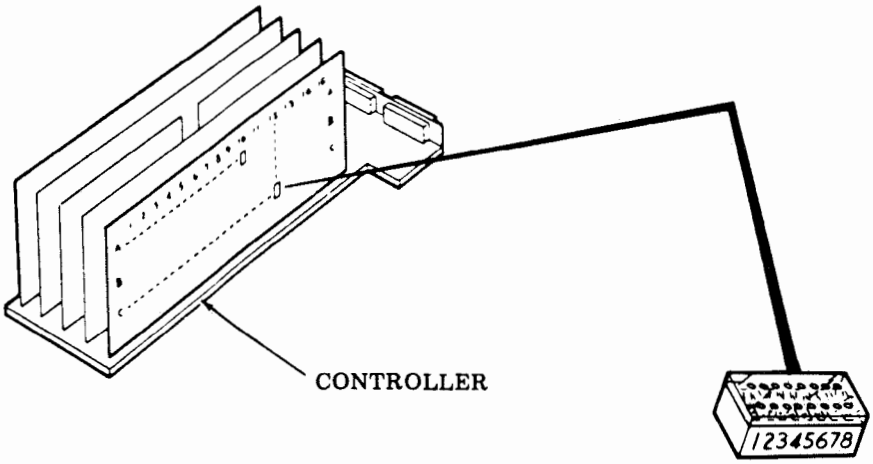

7.	Errored Character on Receive	A-10													
		1	2	3	4	5	—	—	—	—	—	—	—	—	
a.	Not Displayed on Vertical Parity Error	—	—	—	—	●	—	—	—	—	—	—	—	—	
b.	Displayed on Vertical Parity Error	—	—	—	—	O	—	—	—	—	—	—	—	—	*

8.	Send Message Ending Character	A-5					C-12								
		1	2	3	4	5	1	2	3	4	5	6	7	8	
a.	End on FF (Is Not Provided on Basic Model 40)	—	—	—	—	—	—	—	●	—	—	—	—	—	
b.	Do Not End on FF	—	—	—	—	—	—	—	O	—	—	—	—	—	*
c.	End on ETX	—	—	—	—	—	●	—	—	—	—	—	—	—	*
d.	Do Not End on ETX	—	—	—	—	—	O	—	—	—	—	—	—	—	
e.	End on EOT	—	—	—	—	—	—	●	—	—	—	—	—	—	*
f.	Do Not End on EOT	—	—	—	—	—	—	O	—	—	—	—	—	—	
g.	End on GS	—	—	—	—	—	—	—	—	●	—	—	—	—	*
h.	Do Not End on GS	—	—	—	—	—	—	—	—	O	—	—	—	—	

9.	Highlight	A-5					C-12								
		1	2	3	4	5	1	2	3	4	5	6	7	8	
a.	Delimiters Not Sent (Except in Form Send Mode)	—	—	—	—	—	—	—	—	—	●	—	—	—	
b.	Delimiters Sent (Modifies Option 13)	—	—	—	—	—	—	—	—	—	O	—	—	—	*

● Indicates dot end of rocker switch depressed.
O Indicates blank end of rocker switch depressed.
— Position of rocker switch does not affect option.
* Factory programmed.

F. STATION ASSEMBLY (Cont)

Procedure 10 -- Option Information (Cont)

Options for 40/1, 40/2, and 40/3 (Cont)

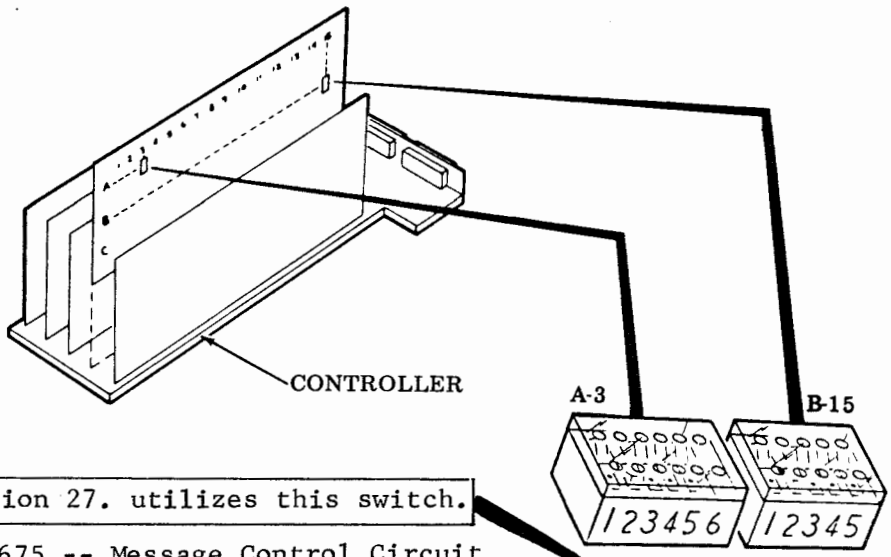

NOTE: Option 27. utilizes this switch.

410675 -- Message Control Circuit Card Options

10. Line Ending Sequence		A-3						B-15					
		1	2	3	4	5	6	1	2	3	4	5	
a.	CR LF	—	—	—	—	○	—	●	●	○	○	○	
b.	CR CR LF	—	—	—	—	○	—	○	○	●	●	●	*
c.	LF	—	—	—	—	●	—	●	●	○	○	○	

11. Mode After Send		A-3						B-15					
		1	2	3	4	5	6	1	2	3	4	5	
a.	Local	—	○	●	●	—	—	—	—	—	—	—	*
b.	†Receive	—	●	○	●	—	—	—	—	—	—	—	
c.	External Mode (Not Used in 40/1, 40/2, or 40/3)	—	○	●	○	—	—	—	—	—	—	—	*

† If DLE EOT is used as a disconnect sequence do not enable 11.b.

12. Form Enter		A-3						B-15					
		1	2	3	4	5	6	1	2	3	4	5	
a.	Disabled in Local	●	—	—	—	—	—	—	—	—	—	—	
b.	Enabled in Local	○	—	—	—	—	—	—	—	—	—	—	*

● Indicates dot end of rocker switch depressed.
○ Indicates blank end of rocker switch depressed.
— Position of rocker switch does not affect option.
* Factory programmed.

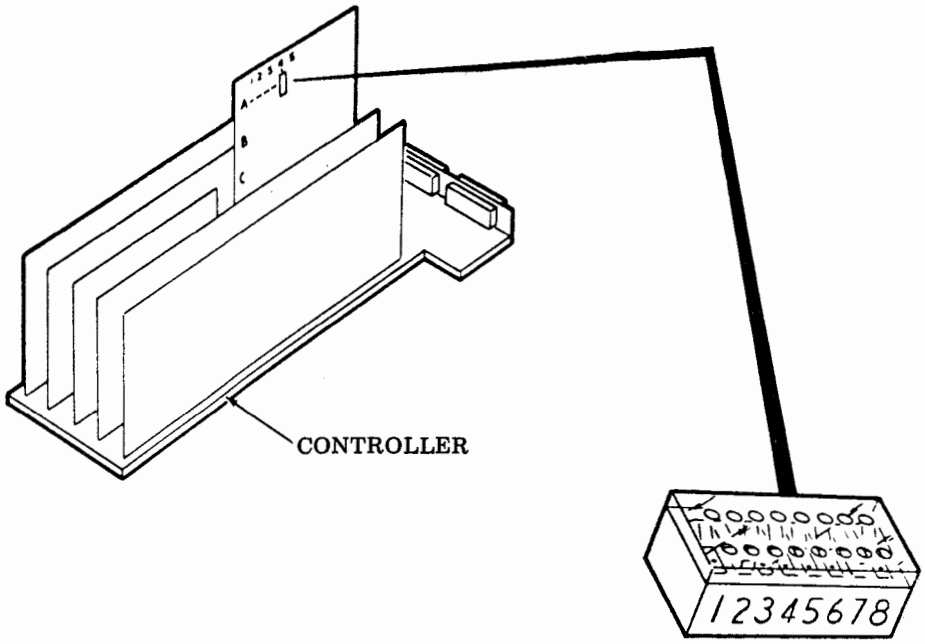

410676 -- Send Variations Circuit Card Options

13. Send Variations (All without delimiters except as modified by Option 9.b.)		A-4							
		1	2	3	4	5	6	7	8
a.	Send All as Displayed	●	O	●	●	●	●	●	O
b.	Send All as Displayed with Unprotected HT Changed to Space	●	O	●	●	●	●	●	● *
c.	Send Protect as Space and Unprotected as Displayed	O	●	O	O	●	O	●	O
d.	Send Protect as Space, Unprotected as Displayed and HT Changed to Space	O	●	O	O	●	O	●	●
e.	Send Protect as Delete, Unprotected as Displayed	O	●	O	O	O	O	●	O
f.	Send Unprotected Only as Displayed	O	●	O	●	●	●	●	O
g.	Send Unprotected Only and HT at End of Field	O	●	O	●	●	O	O	●
h.	Send Unprotected Only with Unprotect HT Changed to Space	O	●	O	●	●	●	●	●

● Indicates dot end of rocker switch depressed.
O Indicates blank end of rocker switch depressed.
— Position of rocker switch does not affect option.
* Factory programmed.

F. STATION ASSEMBLY (Cont)

Procedure 10 -- Option Information (Cont)

Options for 40/1, 40/2, and 40/3 (Cont)
(Options 14, 15, and 16 are not used.)

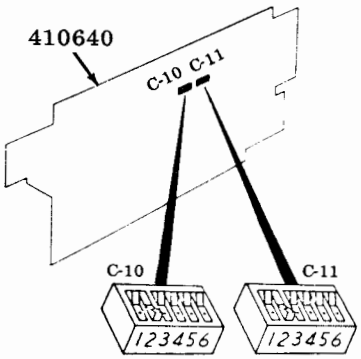

80-Column Printer

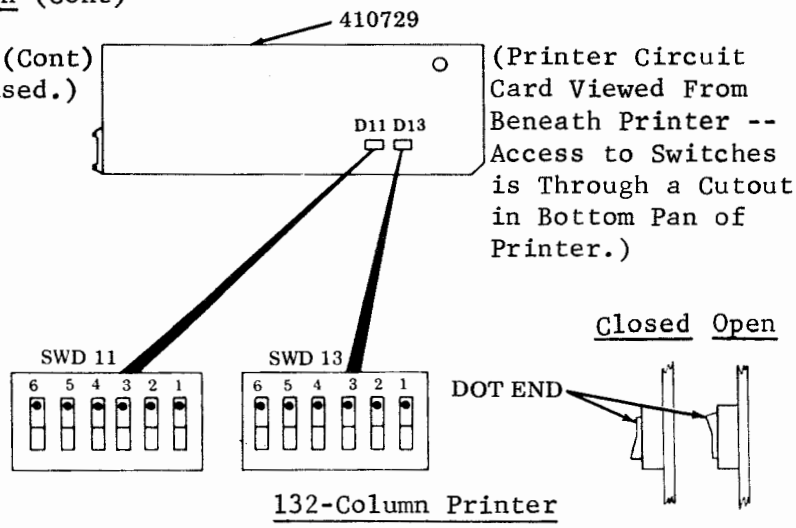

132-Column Printer

410640 -- 80-Column Printer Logic Circuit Card

17. Printer Margin and Form Width		C-10						C-11						
		1	2	3	4	5	6	1	2	3	4	5	6	
c.	Last Character on 80th Column	—	—	—	—	—	—	○	●	●	○	—	—	*
d.	Last Character on 79th Column	—	—	—	—	—	—	○	●	●	●	—	—	
d.	Last Character on 78th Column	—	—	—	—	—	—	●	○	○	●	—	—	
d.	Last Character on 77th Column	—	—	—	—	—	—	●	○	●	○	—	—	
d.	Last Character on 76th Column	—	—	—	—	—	—	●	○	●	●	—	—	
d.	Last Character on 75th Column	—	—	—	—	—	—	●	●	○	●	—	—	
d.	Last Character on 74th Column	—	—	—	—	—	—	●	●	●	○	—	—	
d.	Last Character on 73rd Column	—	—	—	—	—	—	●	●	●	●	—	—	

NOTE: 17.a. and 17.b. are not used.

410729 -- 132-Column Printer Logic Circuit Card

17. Printer Margin and Form Width		D11						D13						
		6	5	4	3	2	1	6	5	4	3	2	1	
e.	Last Character on Column 132	—	—	—	—	—	—	○	○	○	●	—	—	*
f.	Last Character on Column 131	—	—	—	—	—	—	○	○	●	○	—	—	
g.	Last Character on Column 130	—	—	—	—	—	—	○	○	●	●	—	—	
h.	Last Character on Column 129	—	—	—	—	—	—	○	●	○	●	—	—	
i.	Last Character on Column 128	—	—	—	—	—	—	○	●	●	○	—	—	
j.	Last Character on Column 127	—	—	—	—	—	—	○	●	●	●	—	—	
k.	Last Character on Column 126	—	—	—	—	—	—	●	○	○	●	—	—	
l.	Last Character on Column 125	—	—	—	—	—	—	●	○	●	○	—	—	
m.	Last Character on Column 124	—	—	—	—	—	—	●	○	●	●	—	—	
n.	Last Character on Column 123	—	—	—	—	—	—	●	●	○	●	—	—	
o.	Last Character on Column 122	—	—	—	—	—	—	●	●	●	○	—	—	
p.	Last Character on Column 121	—	—	—	—	—	—	●	●	●	●	—	—	

● Indicates dot end of rocker switch depressed.
○ Indicates blank end of rocker switch depressed.
— Position of rocker switch does not affect option.
* Factory programmed.

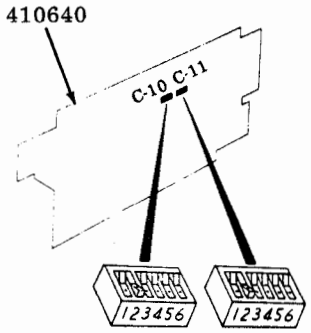

80-Column Printer

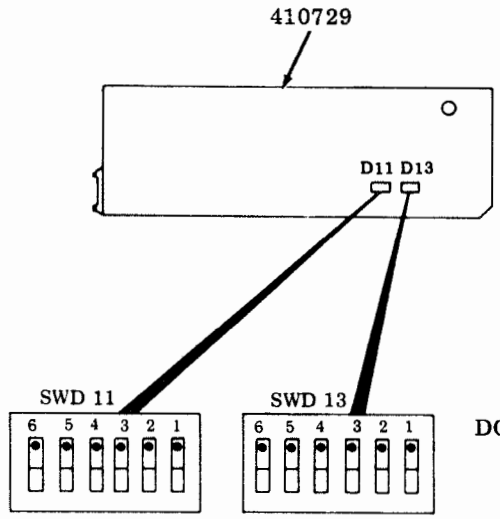

(Printer Circuit Card Viewed From Beneath Printer -- Access to Switches is Through a Cutout in Bottom Pan of Printer.)

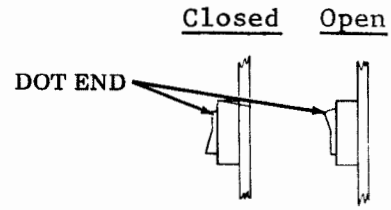

132-Column Printer

410640 -- 80-Column Printer Logic Circuit Card

18. Printer Paper Feed Out		C-10						C-11						
		1	2	3	4	5	6	1	2	3	4	5	6	
a.	No Paper Feed Out	●	—	—	—	—	—	—	—	—	—	—	○	
b.	Paper Feed Out on DCD Loss — 16 Lines	○	—	—	—	—	—	—	—	—	—	—	○	
c.	Paper Feed Out on DCD Loss or ETX	○	—	—	—	—	—	—	—	—	—	—	●	*

410729 -- 132-Column Printer Logic Circuit Card

18. Printer Paper Feed Out		D11						D13						
		6	5	4	3	2	1	6	5	4	3	2	1	
a.	No Paper Feed Out	—	—	●	—	—	—	—	—	—	—	—	○	
b.	Paper Feed Out on DSR Loss — 16 Lines (See Note)	—	—	○	—	—	—	—	—	—	—	—	○	
c.	Paper Feed Out on DSR Loss or ETX	—	—	○	—	—	—	—	—	—	—	—	●	*

NOTE: "DSR Loss" assumes that data set operation is used; the actual controlling SSI signal is loss of Receive Message. The feed out will be 16 lines, as stated, only if Option 39.b. (Forms switch Off) is selected; if Option 39.a. (Forms switch On) is selected, the printer will feed out paper to the next form feed position.

● Indicates dot end of rocker switch depressed.
○ Indicates blank end of rocker switch depressed.
— Position of rocker switch does not affect option.
* Factory programmed.

F. STATION ASSEMBLY (Cont)

Procedure 10 -- Option Information (Cont)

Options for 40/1, 40/2, and 40/3 (Cont)

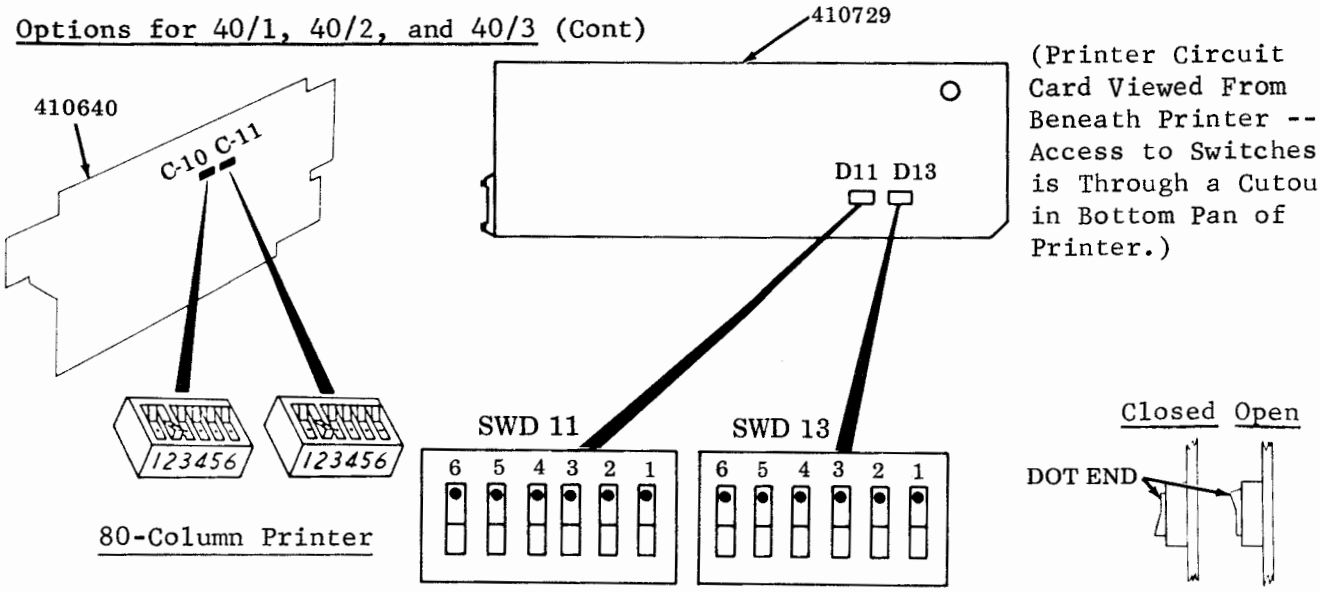

80-Column Printer

132-Column Printer

410640 -- 80-Column Printer Logic Circuit Card

19. Printer Errored Character Symbol		C-10						C-11						
		1	2	3	4	5	6	1	2	3	4	5	6	
a.	Printed on Even Parity Error	—	—	—	●	○	—	—	—	—	—	—	—	*
b.	Printed on Odd Parity Error	—	—	—	○	●	—	—	—	—	—	—	—	
c.	Not Printed on Parity Error	—	—	—	●	●	—	—	—	—	—	—	—	
d.	Printers With 96-Character Set	—	●	○	—	—	—	—	—	—	—	—	—	
e.	Printers With 64-Character Set	—	○	●	—	—	—	—	—	—	—	—	—	
f.	Printers With Extended ASCII Character Set	—	○	○	—	—	—	—	—	—	—	—	—	

410729 -- 132-Column Printer Logic Circuit Card

19. Printer Errored Character Symbol		D11						D13						
		6	5	4	3	2	1	6	5	4	3	2	1	
a.	Printed on Even Parity Error	—	—	—	●	○	—	—	—	—	—	—	—	*
b.	Printed on Odd Parity Error	—	—	—	○	●	—	—	—	—	—	—	—	
c.	Not Printed on Parity Error	—	—	—	●	●	—	—	—	—	—	—	—	
d.	Printers With 96-Character Set	●	○	—	—	—	—	—	—	—	—	—	—	
e.	Printers With 64-Character Set	○	●	—	—	—	—	—	—	—	—	—	—	
f.	Printers With Extended ASCII Character Set	○	○	—	—	—	—	—	—	—	—	—	—	
g.	Printers With Longest Char. Set Having Less Than 64 Char.	○	●	—	—	—	—	—	—	—	—	—	—	

● Indicates dot end of rocker switch depressed.
○ Indicates blank end of rocker switch depressed.
— Position of rocker switch does not affect option.
* Factory programmed.

20.	Line Feed on 80-Column Printer (See adjacent figure.)
a.	Single
b.	Double

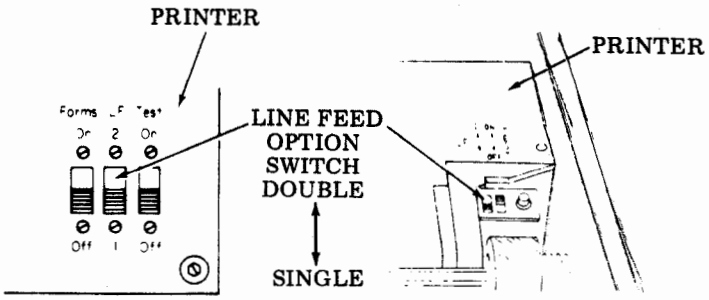

80-Column Tractor Feed

80-Column Friction Feed

20.	Line Feed on 132-Column Printer (See figure below.)
a.	Single
b.	Double

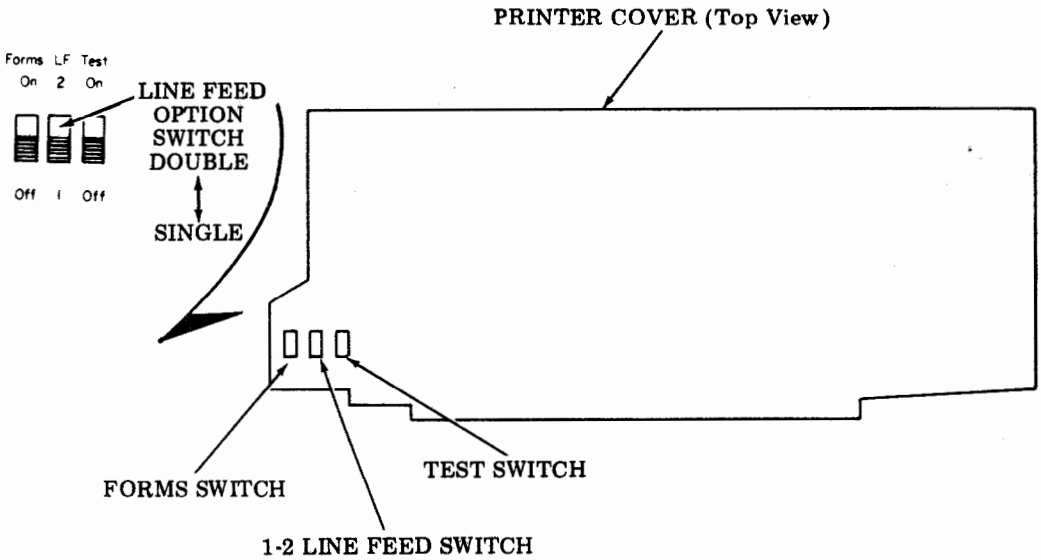

F. STATION ASSEMBLY (Cont)

Procedure 10 -- Option Information (Cont)

Options for 40/1, 40/2, and 40/3 (Cont)

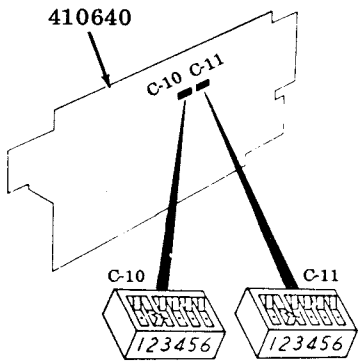

80-Column Printer

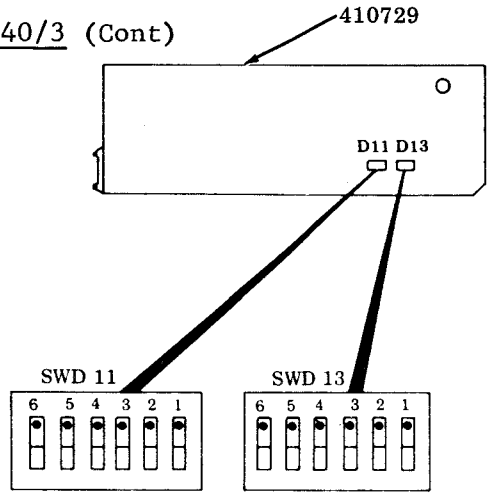

132-Column Printer

(Printer Circuit Card Viewed From Beneath Printer -- Access to Switches is Through a Cutout in Bottom Pan of Printer.)

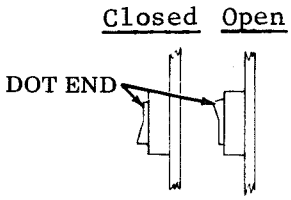

410640 -- 80-Column Printer Logic Circuit Card

21. Foldover on Up-Low Printer		C-10						C-11						
		1	2	3	4	5	6	1	2	3	4	5	6	
a.	Lower Case and Upper Case Print	—	—	—	—	—	—	—	—	—	—	○	—	*
b.	Lower Case Prints as Upper Case	—	—	—	—	—	—	—	—	—	—	●	—	

410729 -- 132-Column Printer Logic Circuit Card

21. Foldover on Up-Low Printer		D11						D13						
		6	5	4	3	2	1	6	5	4	3	2	1	
a.	Lower Case and Upper Case Print	—	—	—	—	—	—	—	—	—	—	○	—	*
b.	Lower Case Prints as Upper Case	—	—	—	—	—	—	—	—	—	—	●	—	

410640 -- 80-Column Printer Logic Circuit Card

22. Foldover on Monocase Printer		C-10						C-11						
		1	2	3	4	5	6	1	2	3	4	5	6	
a.	Lower Case Not Folded Over	—	—	—	—	—	—	—	—	—	—	○	—	
b.	Lower Case Printed as Upper Case	—	—	—	—	—	—	—	—	—	—	●	—	*

410729 -- 132-Column Printer Logic Circuit Card

22. Foldover on Monocase Printer		D11						D13						
		6	5	4	3	2	1	6	5	4	3	2	1	
a.	Lower Case Prints as Error Symbol	—	—	—	—	—	—	—	—	—	—	○	—	
b.	Lower Case Prints as Upper Case	—	—	—	—	—	—	—	—	—	—	●	—	*

● Indicates dot end of rocker switch depressed.
○ Indicates blank end of rocker switch depressed.
— Position of rocker switch does not affect option.
* Factory programmed.

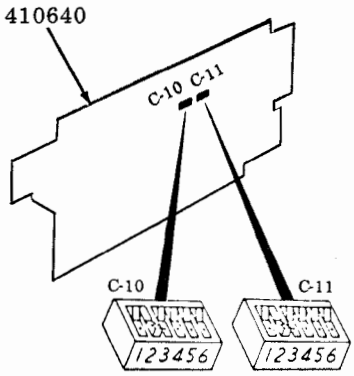

80-Column Printer

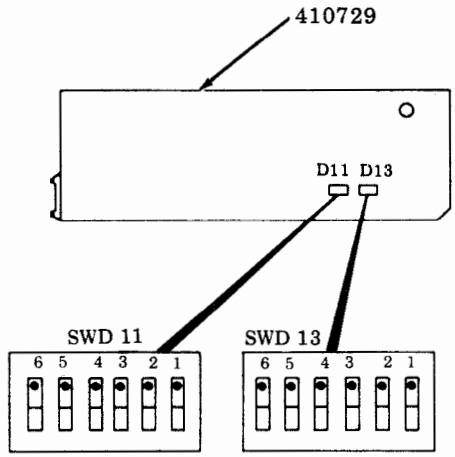

(Printer Circuit Card Viewed From Beneath Printer -- Access to Switches is Through a Cutout in Bottom Pan of Printer.)

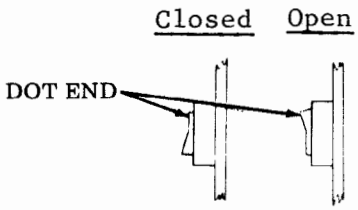

132-Column Printer

410640 -- 80-Column Printer Logic Circuit Card

23. Extended ASCII on Printer (Extended ASCII)		C-10						C-11						
		1	2	3	4	5	6	1	2	3	4	5	6	
a.	†Prints Extended ASCII Characters (No Parity Check)	—	—	—	O	O	—	—	—	—	—	—	—	
b.	Does Not Print Extended Characters (See Option 19.a., b., or c.)	—	—	—	—	—	—	—	—	—	—	—	—	*

† Option 23.a. requires local engineering.

410729 -- 132-Column Printer Logic Circuit Card

23. Extended ASCII on Printer (Extended ASCII)		D11						D13						
		6	5	4	3	2	1	6	5	4	3	2	1	
a.	Prints Extended ASCII Characters (No Parity Check)	—	—	—	O	O	—	—	—	—	—	—	—	
b.	Does Not Print Extended ASCII (See 19.a., b., or c.)	—	—	—	(As in 19.)		—	—	—	—	—	—	—	*

● Indicates dot end of rocker switch depressed.
O Indicates blank end of rocker switch depressed.
— Position of rocker switch does not affect option.
* Factory programmed.

F. STATION ASSEMBLY (Cont)

Procedure 10 -- Option Information (Cont)

Options for 40/1, 40/2, and 40/3 (Cont)

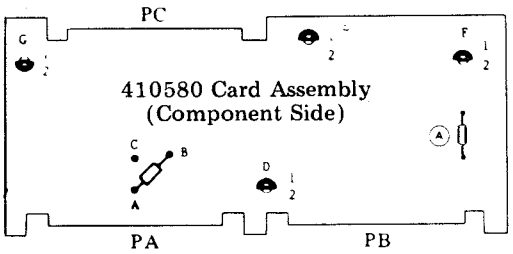

Early Issue 7A

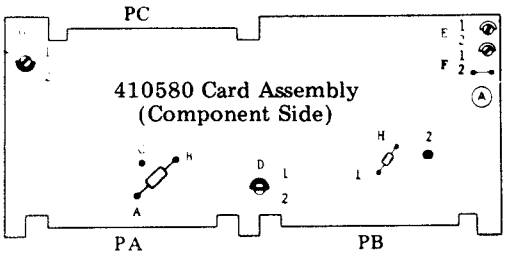

Late Issue 7B

410580 In ROP 40C103/ -- Controller

24.	Odd/Even Character Parity Check	Strap Condition	
a.	Even Vertical Parity (Response for Odd Parity)	Strap A to B	*
b.	Odd Vertical Parity (Response for Even Parity)	Strap A to C	

410580 In ROP 40C103/ -- Controller

25.	Response to Receiving Parity Error	Insulator F Position	Strap Ⓐ Condition	
a.	Printer Receives Spacing Character With Eighth Bit Mark.	2	-	
b.	Printer Receives Character Even Though it has Parity Error.	1	-	*
c.	DATA ERROR Key Lights.	-	Removed	
d.	DATA ERROR Key Does Not Light.	-	Installed	*

26. Trans Start — Is Not to be Enabled.

NOTE: Trans Start is always operable off-line (ROP) to generate local test message.

*Factory programmed.

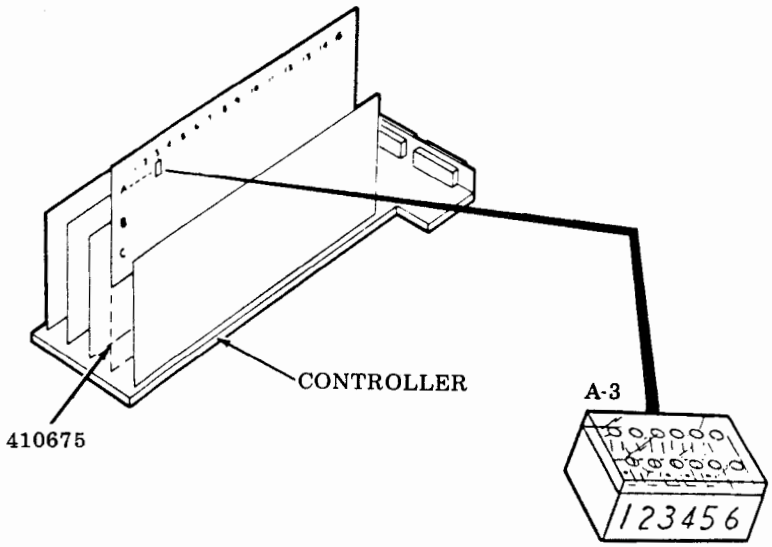

410675 -- Message Control Circuit Card Options

27. Message Start		A-3						
		1	2	3	4	5	6	
a.	Home on Transmit	—	—	—	—	—	●	
b.	Send From Cursor	—	—	—	—	—	O	*

● Indicates dot end of rocker switch depressed.
O Indicates blank end of rocker switch depressed.
— Position of rocker switch does not affect option.
* Factory programmed.

F. STATION ASSEMBLY (Cont)

Procedure 10 -- Option Information (Cont)

Options for 40/1, 40/2, and 40/3 (Cont)

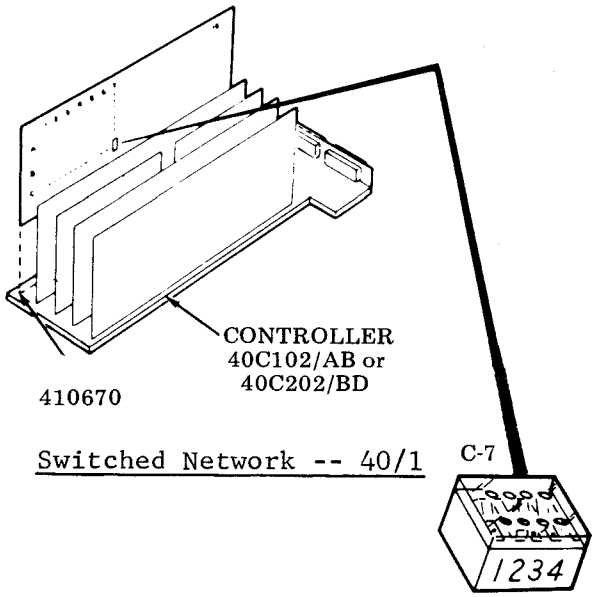

Switched Network -- 40/1

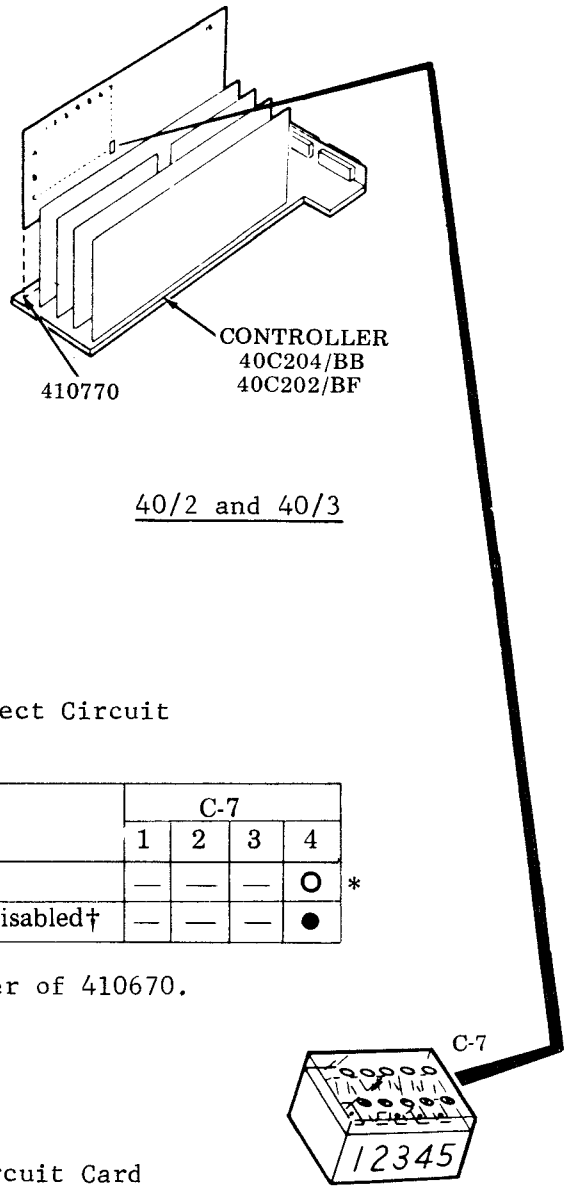

40/2 and 40/3

410670 -- S/R, PTR, and Disconnect Circuit Card Options (40/1)

28. Disconnect on Loss of Carrier		C-7				
		1	2	3	4	
a.	Disconnect After 45 Seconds	—	—	—	O	*
b.	Does Not Disconnect — Timer Disabled†	—	—	—	●	

† Applies to Issue 5A or later of 410670.

410770 -- Printer Interface Circuit Card Options (40/2 and 40/3)

28. Disconnect on Loss of Carrier		C-7					
		1	2	3	4	5	
a.	Disconnect After 45 Seconds	—	—	O	—	—	*
b.	Does Not Disconnect — Timer Disables	—	—	●	—	—	

● Indicates dot end of rocker switch depressed.
O Indicates blank end of rocker switch depressed.
— Position of rocker switch does not affect option.
* Factory programmed.

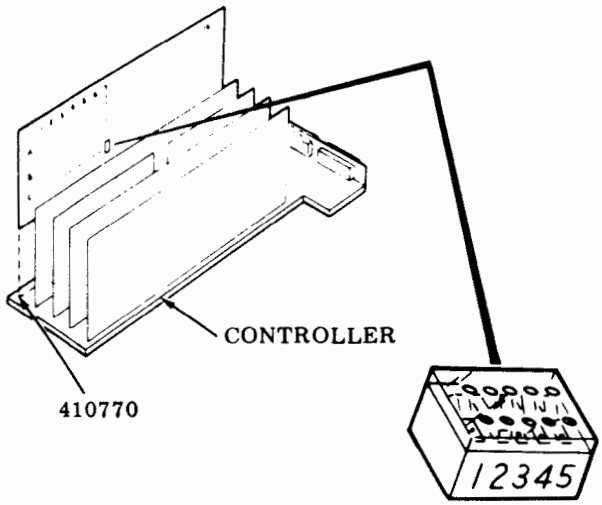

410770 -- Printer Interface Card Options (40/2 and 40/3 only)

29. Printer Message Mode		C-7					
		1	2	3	4	5	
a.	When in Print On-Line Mode, Copies Display in Send or Copies Line in Receive or Local.	—	—	—	O	●	*
b.	Permanent Print On-Line.	—	—	—	●	●	
c.	Permanent Print On-Line Copies Received Data Only.	—	—	—	●	O	
d.	When in Print-On-Line, Copies Received Data When in Receive or Local. (See Note.)	—	—	—	O	O	

NOTE: (40/3 only) -- With Option 29.d. installed and PRINT ON LINE key lighted, if SEND is depressed, the printer motor will start. When polled the PRINT ON LINE light will go out, but the motor stays on. At end of message when SEND light goes out, the PRINT ON LINE will light and motor stops. If the printer is optioned for 18.b. or 18.c., a 16-line feed out or form feed will occur (a friction feed printer will feed out, but a tractor feed will feed out or form feed, whichever is shorter). If this feed out is not desired, specify Option 18.a. and requirement that received messages include repeated NLs (with appropriate time fills) or form feeds (whichever applies). Option 18.a. does not affect the printer motor running when sending.

● Indicates dot end of rocker switch depressed.
O Indicates blank end of rocker switch depressed.
— Position of rocker switch does not affect option.
* Factory programmed.

F. STATION ASSEMBLY (Cont)

Procedure 10 -- Option Information (Cont)

Options for 40/1, 40/2, and 40/3 (Cont)

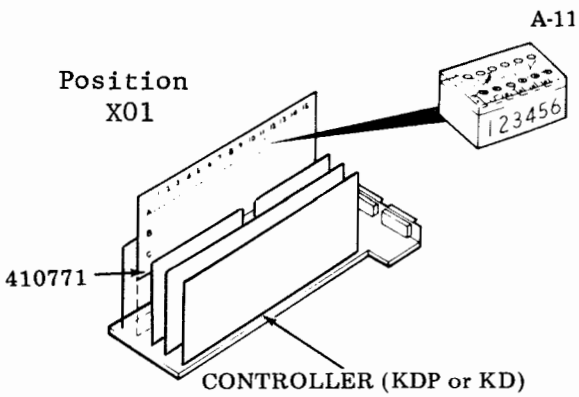

NOTE: In 40/3 arrangements KD has no card in position X01 unless part of KD-RO arrangement.

410771 -- Modified EIA Interface Circuit Card (9140 Interface Circuit Card Options) (40/3 only)

30.	Message Preparation	A-11 1	2	3	4	5	6	
a.	Automatic Cursor Home and Send Mode on Opcon Entry of Message Ending Character	—	—	—	—	—	○	*
b.	Manual Cursor Home and Send Mode on Opcon Entry of Message Ending Character	—	—	—	—	—	●	

● Indicates dot end of rocker switch depressed.
○ Indicates blank end of rocker switch depressed.
— Position of rocker switch does not affect option.
* Factory programmed.

NOTE: The straps to enable or disable the following options are on the component side (front) of the 410771 circuit card. Early cards have the lands on the rear. The cards are furnished without straps.

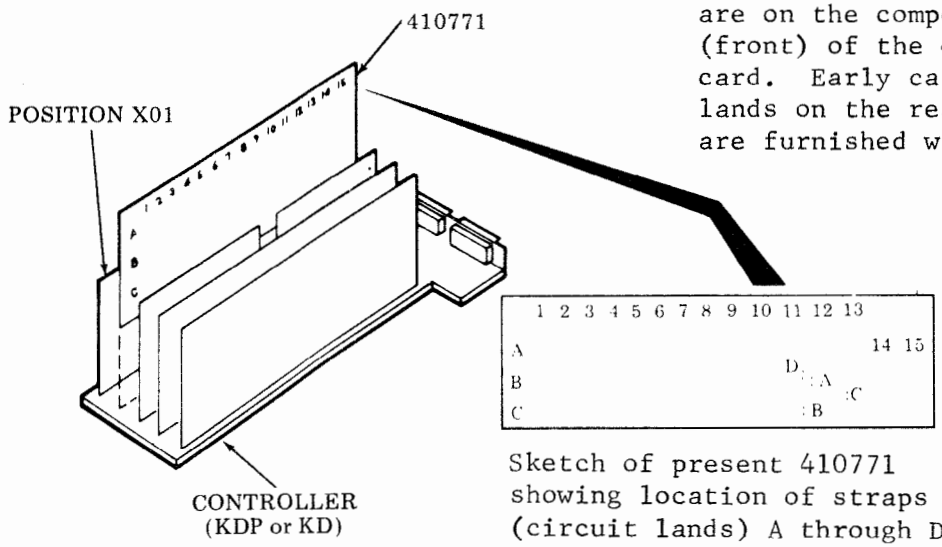

Sketch of present 410771 showing location of straps (circuit lands) A through D.

410771 -- Modified EIA Interface Circuit Card (9140 Interface Circuit Card Options) (40/3 only)

31.	KD Forced to Receive Mode When Alarm Lead Is On	Strap A	
a.	Independent of Printer Mode	○	*
b.	Dependent on Printer Mode (Goes Receive Only if in Print On Line Mode)	●	

32.	Printer Access From Line (When PRINT ON LINE Lamp is On)	Strap B	
a.	If KD Is in Send, Receive, or Local Mode	○	*
b.	If KD Is in Receive Mode Only	●	

33.	9140 Controller Mode — See Note	Strap C	
a.	Full Duplex (FDX)	●	
b.	Half-Duplex (HDX)	○	*

NOTE: If operation of system is such that the computer immediately receives an answer-back (AB) after station sends a message and 33.b. is chosen, change to 33.a. 33.a. will not allow this AB to occur but should not be selected unless the "automatic" AB after message occurs.

34.	Control Signal Restrictions	Strap D	
a.	RTS Can Turn On When STR Is On	○	*
b.	RTS Cannot Turn On When STR Is On	●	

(RTS is Request To Send, STR is Selected To Receive)

● Indicates closed circuit or strap between circuit lands.
○ Indicates open circuit or no connection between circuit lands.
* Factory programmed.

F. STATION ASSEMBLY (Cont)

Procedure 10 -- Option Information (Cont)

Options for 40/1, 40/2, and 40/3 (Cont)

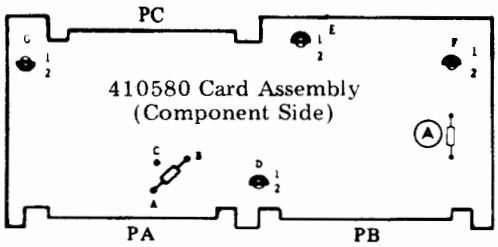

Early Issue 7A

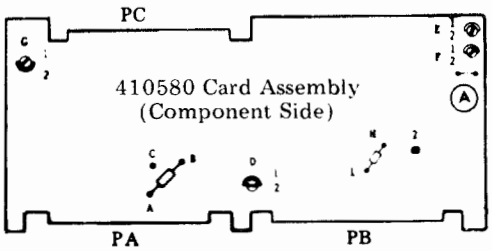

Late Issue 7B

410580 In ROP 40C103/ -- Controller

35. Printer Motor Control (See Note Below)		Strap Condition	
a.	"Data Set Ready" Controls Printer Motor	Strap H to 1	*
b.	"Carrier Detect" Controls Printer Motor	Strap H to 2	

NOTE: H strap location is on component side at coordinates D11. Strap H position present only on Issue 7B (and higher) 410580 circuit card.

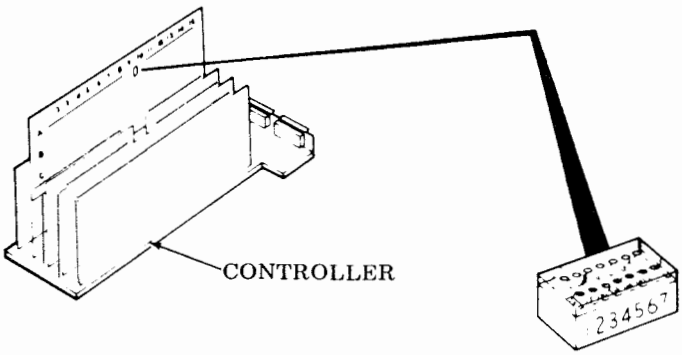

410671 -- KD or KDP Controller (Issue 4B and higher) (40/1 only)

35. Printer Motor Control		A-10							
		1	2	3	4	5	6	7	
a.	DSR Controls Printer Motor	—	—	—	—	O	O	—	*
b.	Carrier Detect Controls Printer Motor	—	—	—	—	●	O	—	

● Indicates dot end of rocker switch depressed.
O Indicates blank end of rocker switch depressed.
— Position of rocker switch does not affect option.
* Factory programmed.

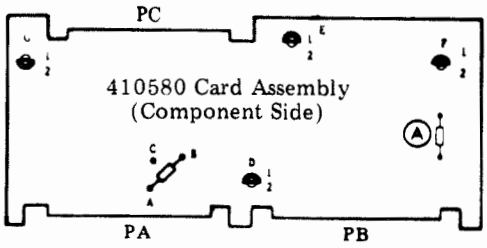

Early Issue 7A

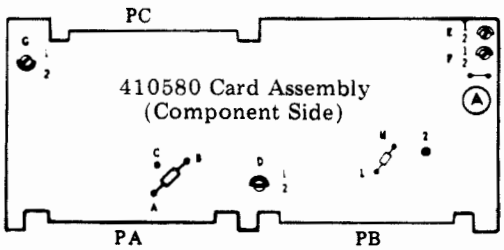

Late Issue 7B

410580 In ROP 40C103/ -- Controller

36. Printer Paper Alarm		Insulator G Position	
a.	Paper Alarm Affects "Data Terminal Ready" at End of Call. DTR Held Off Until Paper is Restored.	2	*
b.	Paper Alarm Affects "Data Terminal Ready" Immediately. DTR Held Off Until Paper is Restored.	1	

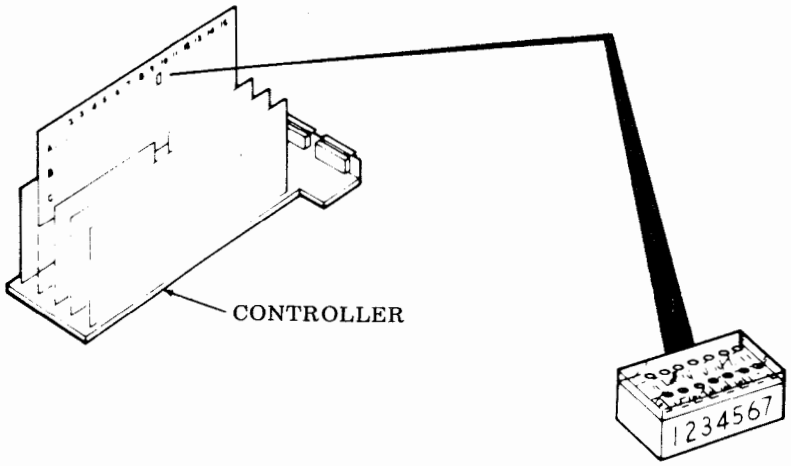

410671 -- KD or KDP Controller (Issue 4B and higher)
(Applies to 40/1 only)

36. Paper Alarm		A-10							
		1	2	3	4	5	6	7	
a.	Low Paper Does Not Affect STD	—	—	—	—	—	—	O	*
b.	Low Paper Drops STD Immediately	—	—	—	—	—	—	●	

● Indicates dot end of rocker switch depressed.
O Indicates blank end of rocker switch depressed.
– Position of rocker switch does not affect option.
* Factory programmed.

F. STATION ASSEMBLY (Cont)

Procedure 10 -- Option Information (Cont)

Options for 40/1, 40/2, and 40/3 (Cont)

NOTE 1: Early 410771 circuit cards do not have an option switch in position C-10. Clear to send is always required for sending.

NOTE 2: Option 37.a. must be used if C10 is present on 40/3 arrangements.

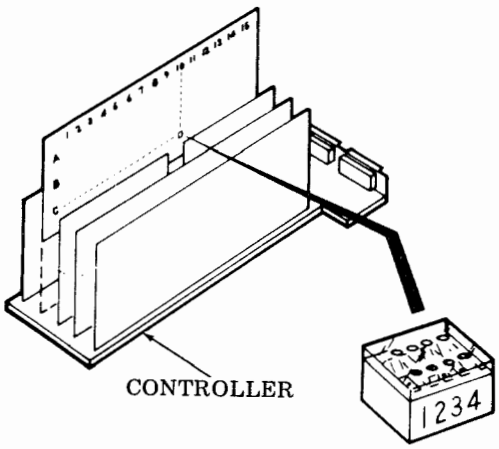

410771 -- Modified EIA Interface Circuit Card (9140 Interface Circuit Card Options) (Applies to 40/3 only)

37. Requirement for Sending		C-10				
		1	2	3	4	
a.	CTS Signal Required for Sending	○	●	-	-	*
b.	CTS Signal Not Required for Sending	●	○	-	-	

● Indicates dot end of rocker switch depressed.
○ Indicates blank end of rocker switch depressed.
– Position of rocker switch does not affect option.
* Factory programmed.

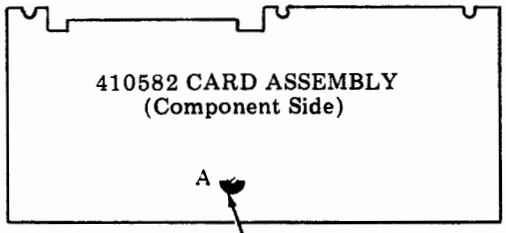

Insulator in the down position.

410582 In ROP Controller

38. Data Stacking		Insulator Position
a.	Enable Data Stacking	Insulator Up
b.	Disable Data Stacking	Insulator Down *

NOTE: The following strapping is required on Issue 1 of the 410587 circuit card when using a 40C103/AE ROP controller (without a buffer) and Option 38.a. is to be enabled. Select Option 38.b. when using 40C103/AD (with buffer).

PC -- PIN 20 to MLB1 PIN 1
MLB1 PIN 2 to MLB1 PIN 3
MLB1 PIN 4 to MLA1 PIN 2
(Connector PC-22)

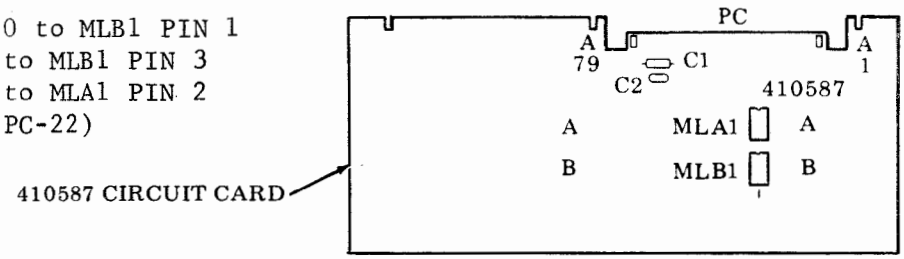

Issue 2A of the 410587 circuit card has these straps incorporated in the board layout.

F. STATION ASSEMBLY (Cont)

Procedure 10 -- Option Information (Cont)

Options for 40/1, 40/2, and 40/3 (Cont)

Forms Switch (Under Tractor Feed Printer Cover)
(80-Column Printer)

39. Forms (Tractor Feed Printer Only)	
a.	On
b.	Off *

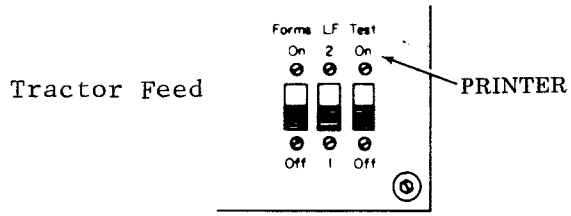

Forms Switch (132-Column Printer)

39. Forms	
a.	On
b.	Off *

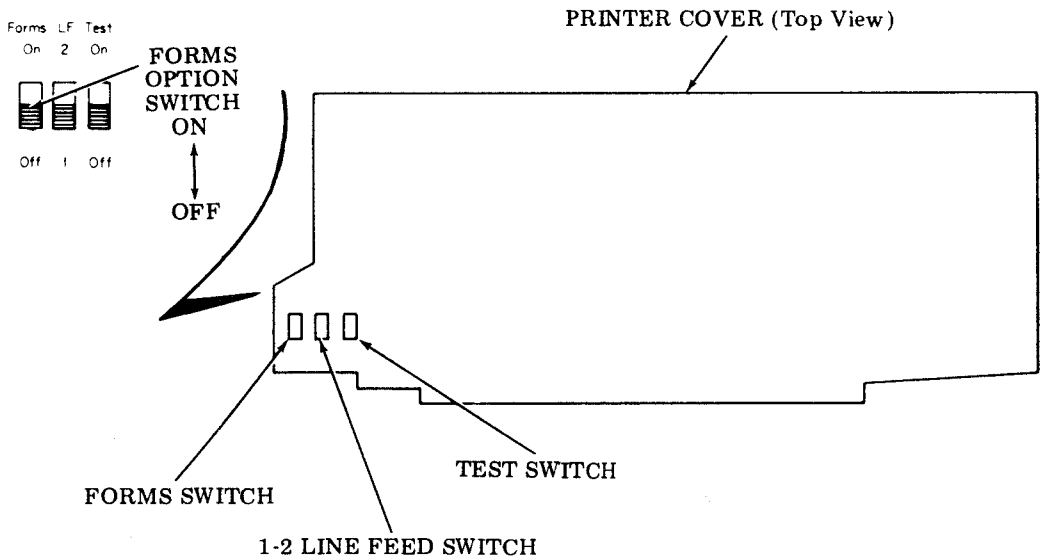

*Factory programmed.

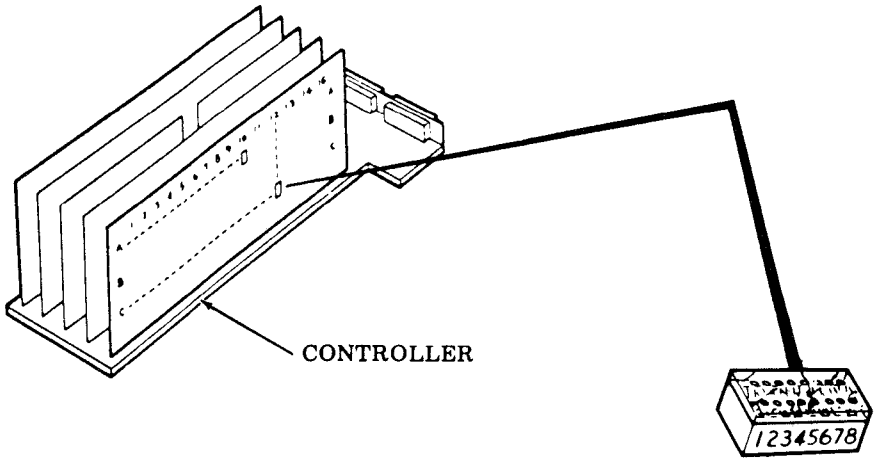

410674 -- Data Bus and Decode Circuit Card (Used in 40/2 only; switch is present, but not used on 40/1 and 40/3)

40. Go Receive on Sending CR (←) (See Note)	C-12								
	1	2	3	4	5	6	7	8	
a. Go Receive on Sending CR	—	—	—	—	—	—	—	●	++
b. Do Not Go Receive on Sending CR	—	—	—	—	—	—	—	O	*

NOTE: Applies to Issues 4B and later of the 410674 circuit card.

● Indicates dot end of rocker switch depressed.
O Indicates blank end of rocker switch depressed.
— Position of rocker switch does not affect option.
* Factory programmed.
++ Applies to HDX operation.

F. STATION ASSEMBLY (Cont)

Procedure 10 -- Option Information (Cont)

Options for 40/1, 40/2, and 40/3 (Cont)

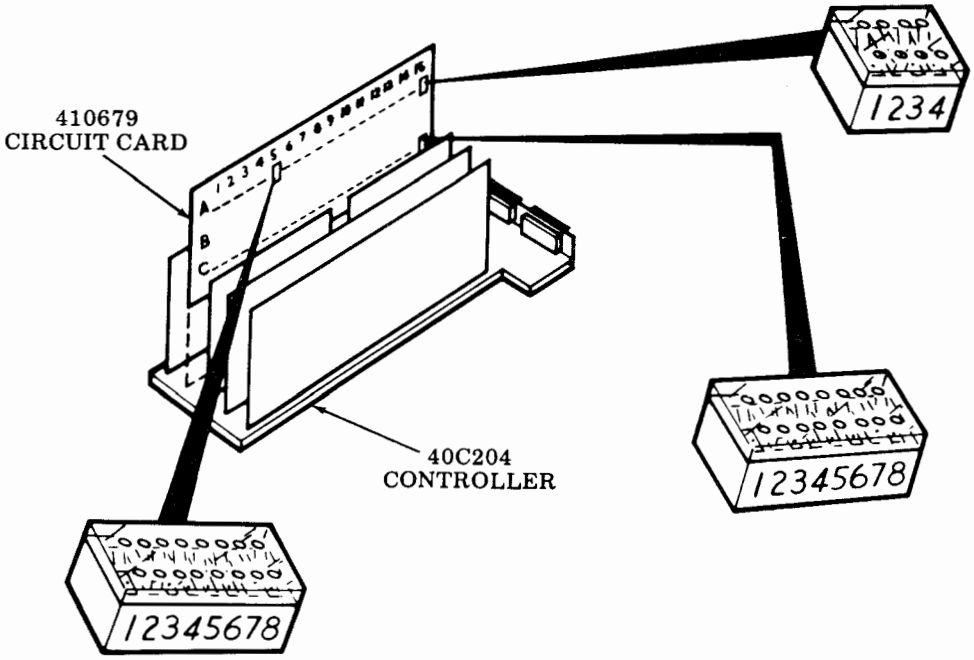

410679 -- Full Duplex Interface Circuit Card (Applies to 40/2 only)

		A-5								C-17								A-17				
41.	Mode of Operation	1	2	3	4	5	6	7	8	1	2	3	4	5	6	7	8	1	2	3	4	
a.	Half-Duplex	–	●	–	–	–	–	–	–	–	–	–	–	–	–	–	–	–	–	–	–	
b.	Full Duplex	–	○	–	–	–	–	–	–	–	–	–	–	–	–	–	–	–	–	–	–	*

● Indicates dot end of rocker switch depressed.
○ Indicates blank end of rocker switch depressed.
– Position of rocker switch does not affect option.
* Factory programmed.

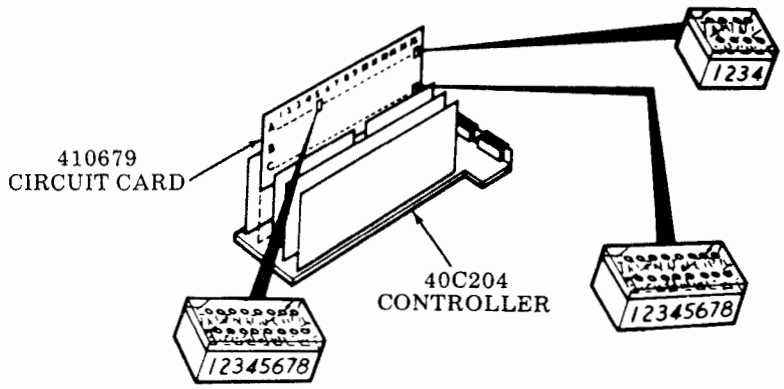

410679 -- Full Duplex Interface Circuit Card
(Options 42 through 47 apply to 40/2 only)

42.	Parity Generation	A-5								C-17								A-17				
		1	2	3	4	5	6	7	8	1	2	3	4	5	6	7	8	1	2	3	4	
a.	Send Even Parity	–	–	○	●	–	○	–	–	–	–	–	–	–	–	–	–	–	–	–	–	*
b.	Send Odd Parity	–	–	●	●	–	○	–	–	–	–	–	–	–	–	–	–	–	–	–	–	
c.	Send 8th Bit as Mark	–	–	○	○	–	○	–	–	–	–	–	–	–	–	–	–	–	–	–	–	
d.	Send 8th Bit as Space	–	–	○	○	–	●	–	–	–	–	–	–	–	–	–	–	–	–	–	–	

43.	Stop Bit Generation	A-5								C-17								A-17				
		1	2	3	4	5	6	7	8	1	2	3	4	5	6	7	8	1	2	3	4	
a.	Send One Stop Bit	–	–	–	–	●	–	–	–	–	–	–	–	–	–	–	–	–	–	–	–	*
b.	Send Two Stop Bits	–	–	–	–	○	–	–	–	–	–	–	–	–	–	–	–	–	–	–	–	

44.	EIA Received Data	A-5								C-17								A-17				
		1	2	3	4	5	6	7	8	1	2	3	4	5	6	7	8	1	2	3	4	
a.	Enable EIA Receive Data	–	–	–	–	–	–	●	–	–	–	–	–	–	–	–	–	–	–	–	–	*
b.	Disable EIA Receive Data	–	–	–	–	–	–	○	–	–	–	–	–	–	–	–	–	–	–	–	–	

45.	Current Loop Data	A-5								C-17								A-17				
		1	2	3	4	5	6	7	8	1	2	3	4	5	6	7	8	1	2	3	4	
a.	Enable Receive Data From Current Loop	–	–	–	–	–	–	–	●	–	–	–	–	–	–	–	–	–	–	–	–	
b.	Disable Receive Data From Current Loop	–	–	–	–	–	–	–	○	–	–	–	–	–	–	–	–	–	–	–	–	*

46.	Interface Select	A-5								C-17								A-17				
		1	2	3	4	5	6	7	8	1	2	3	4	5	6	7	8	1	2	3	4	
a.	103-Type Modem Interface or 20/60 Milliampere Interface	–	–	–	–	–	–	–	–	○	–	–	–	–	–	–	–	–	–	–	–	
b.	202-Type Modem Interface	–	–	–	–	–	–	–	–	●	–	–	–	–	–	–	–	–	–	–	–	*

47.	Printer Interface	A-5								C-17								A-17				
		1	2	3	4	5	6	7	8	1	2	3	4	5	6	7	8	1	2	3	4	
a.	Enable Printer Interface	–	–	–	–	–	–	–	–	–	–	–	–	–	–	–	–	–	○	–	–	
b.	Disable Printer Interface	–	–	–	–	–	–	–	–	–	–	–	–	–	–	–	–	–	●	–	–	*

● Indicates dot end of rocker switch depressed.
○ Indicates blank end of rocker switch depressed.
– Position of rocker switch does not affect option.
* Factory programmed.

F. STATION ASSEMBLY (Cont)

Procedure 10 -- Option Information (Cont)

Options for 40/1, 40/2, and 40/3 (Cont)

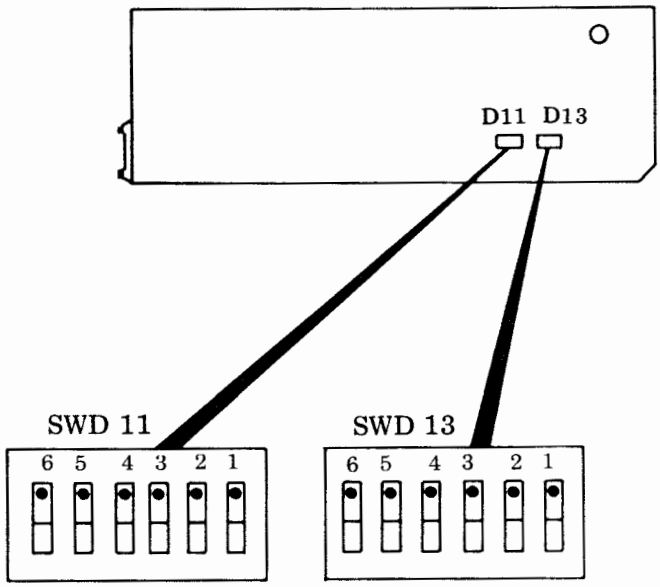

(Printer Circuit Card Viewed From Beneath Printer -- Access to Switches is Through a Cutout in Bottom Pan of Printer.)

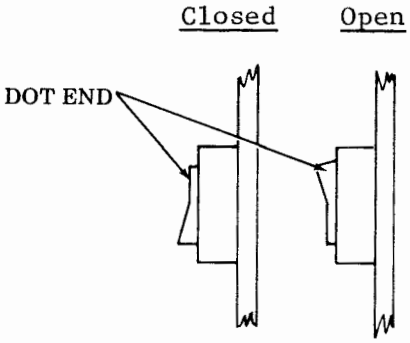

410729 -- Printer Logic Circuit Card (132-Column Printer)

48. Incomplete Form Suppresses Paper Alarm	D11						D13						
	6	5	4	3	2	1	6	5	4	3	2	1	
a. No (Paper Out Not Gated With Form Out)	—	—	—	—	—	●	—	—	—	—	—	—	*
b. Yes (Paper Out Gated With Form Out)	—	—	—	—	—	O	—	—	—	—	—	—	

● Indicates dot end of rocker switch depressed.
O Indicates blank end of rocker switch depressed.
— Position of rocker switch does not affect option.
* Factory programmed.

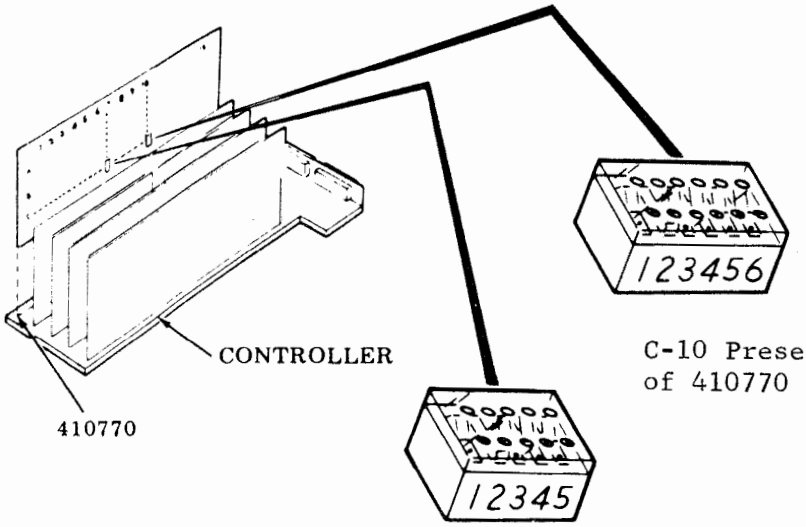

C-10 Present on Issue 3A of 410770 Card

410770 -- Independent Printer Access Circuit Card (Issue 2A and Later) (Option 49 applies to 40/2 only; Options 50 and 51 apply to 40/2 and 40/3.)

49.	Interrupt Feature for KD Stations Only (See Notes)	C-7					C-10						
		1	2	3	4	5	1	2	3	4	5	6	
a.	Enable KD Interrupt Feature	●	O	–	–	–	O	O	–	–	–	–	*
b.	To Disable Interrupt Feature on KD Stations, Place a Blocking Keytop Over the Interrupt Key on the Operator Console						–	–	–	–	–	–	

NOTE 1: For Issue 3A and later cards, existing Option 49 requires additional switches; they are C-10 1 and 2.

NOTE 2: Issues 1 and 2 of cards allow use of Option 49, but require cut and use of C7.

50.	Action Upon Printer SSI Loss (See Note)	C-10						
		1	2	3	4	5	6	
a.	Go Local and Hold	●	O	–	–	–	–	
b.	Go Local and Release	O	●	–	–	–	–	
c.	No Mode Change	O	O	–	–	–	–	*

NOTE: POL turned off in a., b., or c. Issue 1 cards will not change mode (and POL stays on) if SSI fails.

51.	Remote Control (See Notes)	C-10						
		1	2	3	4	5	6	
a.	4210 Character Control	–	–	●	O	–	–	*
b.	9140 POL Control	–	–	O	●	–	–	

NOTE 1: Cards Issue 3A are permanently equipped with Option 51.a.

NOTE 2: If both Option 51.b. and 53.a. are selected, strap A on component side must be cut, otherwise strap must remain installed.

● Indicates dot end of rocker switch depressed.
O Indicates blank end of rocker switch depressed.
– Position of rocker switch does not affect option.
* Factory programmed.

F. STATION ASSEMBLY (Cont)

Procedure 10 -- Option Information (Cont)

Options for 40/1, 40/2, and 40/3 (Cont)

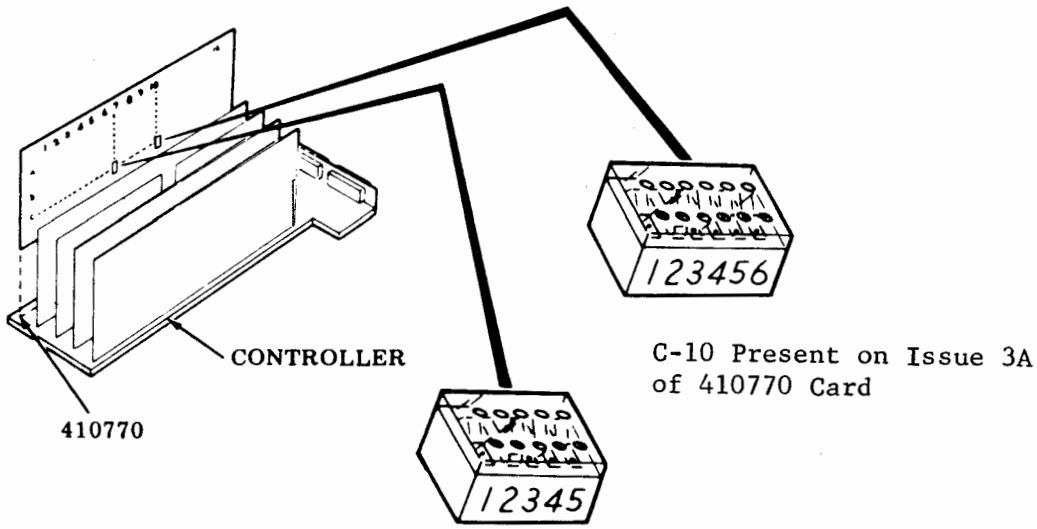

410770 -- Independent Printer Access Circuit Card (Issues 2A and Later)
(Options 52 and 53 apply to 40/2 and 40/3 only.)

52.	PRINT ON LINE Control (See Note)	C-10						
		1	2	3	4	5	6	
a.	Copy All Sent Data.	–	–	–	–	●	–	
b.	Same as Option 29.	–	–	–	–	O	–	*

NOTE: POL is automatically turned on when SEND is lighted for Option a. Issue 1 cards are permanently equipped with Option 52.b.

53.	Printer Motor Hold Timer (See Note)	C-10						
		1	2	3	4	5	6	
a.	Enabled (See Note 2 Below Option 51.)	–	–	–	–	–	●	
b.	Disabled	–	–	–	–	–	O	*

NOTE: With Option 53.a. printer motor is held on for two minutes following end of message. This is useful if messages are less than two minutes apart. Issue 1 cards are equipped with Option 53.b.

● Indicates dot end of rocker switch depressed.
O Indicates blank end of rocker switch depressed.
– Position of rocker switch does not affect option.
* Factory programmed.

403400 -- Modification Kit (Applies to 40/2 only)

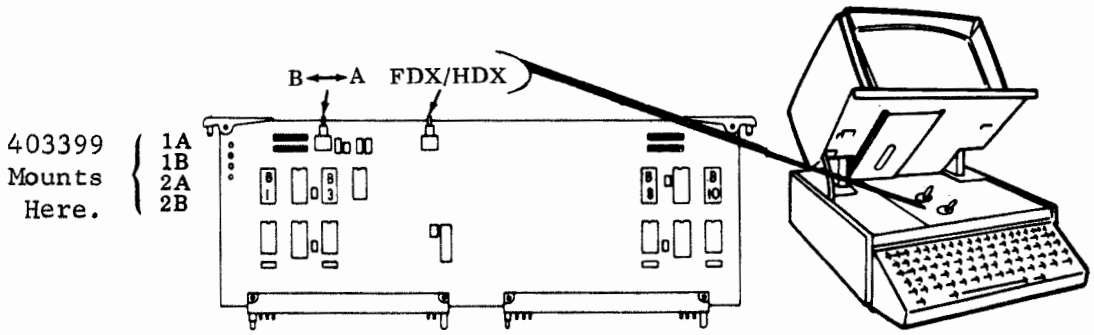

Option	410680 Circuit Card (In Position 09 of Display Logic)																															
	Switch Position "B"																Switch Position "A"															
	B-1								B-8								B-3								B-10							
	1	2	3	4	5	6	7	8	1	2	3	4	5	6	7	8	1	2	3	4	5	6	7	8	1	2	3	4	5	6	7	8
Requires Reverse Channel to Send (202)	●	–	–	–	–	–	–	–	–	–	–	–	–	–	–	–	●	–	–	–	–	–	–	–	–	–	–	–	–	–	–	–
Ignore Reverse Channel to Send (202 or 103)	○	–	–	–	–	–	–	–	–	–	–	–	–	–	–	–	○	–	–	–	–	–	–	–	–	–	–	–	–	–	–	–
Half-Duplex (See Note 1)	–	●	–	–	–	–	–	–	–	–	–	–	–	–	–	–	–	●	–	–	–	–	–	–	–	–	–	–	–	–	–	–
Full Duplex (See Note 1)	–	○	–	–	–	–	–	–	–	–	–	–	–	–	–	–	–	○	–	–	–	–	–	–	–	–	–	–	–	–	–	–
Send Even Parity	–	–	○	●	–	○	–	–	–	–	–	–	–	–	–	–	–	–	○	●	–	○	–	–	–	–	–	–	–	–	–	–
Send Odd Parity	–	–	●	●	–	○	–	–	–	–	–	–	–	–	–	–	–	–	●	●	–	○	–	–	–	–	–	–	–	–	–	–
Send 8th Bit as Mark (Choose 1)	–	–	○	○	–	○	–	–	–	–	–	–	–	–	–	–	–	–	○	○	–	○	–	–	–	–	–	–	–	–	–	–
Send 8th Bit as Space (Choose 1)	–	–	○	○	–	●	–	–	–	–	–	–	–	–	–	–	–	–	○	○	–	●	–	–	–	–	–	–	–	–	–	–
Send One Stop Bit (Choose 1)	–	–	–	–	●	–	–	–	–	–	–	–	–	–	–	–	–	–	–	–	●	–	–	–	–	–	–	–	–	–	–	–
Send Two Stop Bits (Choose 1)	–	–	–	–	○	–	–	–	–	–	–	–	–	–	–	–	–	–	–	–	○	–	–	–	–	–	–	–	–	–	–	–
Enable EIA Receive Data	–	–	–	–	–	–	●	–	–	–	–	–	–	–	–	–	–	–	–	–	–	–	●	–	–	–	–	–	–	–	–	–
Disable EIA Receive Data	–	–	–	–	–	–	○	–	–	–	–	–	–	–	–	–	–	–	–	–	–	–	○	–	–	–	–	–	–	–	–	–
Enable Receive Data From Current Loop	–	–	–	–	–	–	–	●	–	–	–	–	–	–	–	–	–	–	–	–	–	–	–	●	–	–	–	–	–	–	–	–
Disable Receive Data From Current Loop	–	–	–	–	–	–	–	○	–	–	–	–	–	–	–	–	–	–	–	–	–	–	–	○	–	–	–	–	–	–	–	–
103-Type Modem or 20/60 mA Loop	–	–	–	–	–	–	–	–	○	–	–	–	–	–	–	–	–	–	–	–	–	–	–	–	○	–	–	–	–	–	–	–
202-Type Modem Interface	–	–	–	–	–	–	–	–	●	–	–	–	–	–	–	–	–	–	–	–	–	–	–	–	●	–	–	–	–	–	–	–
110 Baud	–	–	–	–	–	–	–	–	–	●	●	●	○	●	○	●	–	–	–	–	–	–	–	–	–	●	●	●	○	●	○	●
150 Baud	–	–	–	–	–	–	–	–	–	●	●	●	●	●	●	○	–	–	–	–	–	–	–	–	–	●	●	●	●	●	●	○
300 Baud	–	–	–	–	–	–	–	–	–	●	●	●	●	●	○	○	–	–	–	–	–	–	–	–	–	●	●	●	●	●	○	○
600 Baud	–	–	–	–	–	–	–	–	–	●	●	●	●	○	○	○	–	–	–	–	–	–	–	–	–	●	●	●	●	○	○	○
1200 Baud	–	–	–	–	–	–	–	–	–	●	●	●	○	○	○	○	–	–	–	–	–	–	–	–	–	●	●	●	○	○	○	○
2400 Baud	–	–	–	–	–	–	–	–	–	●	●	○	○	○	○	○	–	–	–	–	–	–	–	–	–	●	●	○	○	○	○	○
4800 Baud	–	–	–	–	–	–	–	–	–	●	○	○	○	○	○	○	–	–	–	–	–	–	–	–	–	●	○	○	○	○	○	○

410679 Circuit Card	A-17			
	1	2	3	4
Clock Divide	–	–	●	–

(See Note 2)

NOTE 1: This option may be programmed one of two ways:

(a) When A/B switch is to be used to determine FDX or HDX operation, then switch B1-2 and B1-3 must both have dot end or rocker switch depressed.

(b) If attendant wishes to switch between FDX and HDX, then switch B1 and B3. Position 2 must both be closed.

NOTE 2: To use the 403400 modification kit, the switch (A17-3) on the 410679 circuit card must have the dot end of the rocker switch depressed.

F. STATION ASSEMBLY (Cont)

Procedure 10 -- Option Information (Cont)

Options for 9140 Station Controller

The options on the 9140 Station Controller circuit cards are programmed by straps on the cards that are either cut or left closed.

CAUTION: WHEN CUTTING STRAPS, BE SURE THE CUT ENDS OF THE STRAP ARE BENT IN A MANNER THAT PREVENTS SHORTING THEM TO ADJACENT STRAPS OR LANDS ON THE CIRCUIT CARD.

Options 1.a. through 1.d. each require 8 levels of a character to be coded into the straps corresponding to the proper levels. The ASCII chart shows the mark and space condition of the bits for each ASCII character. Even parity (an even number of marking straps cut) must be used. Options 1.e. through 1.p. each require 7 levels to be coded.

Option numbers missing from the numerical sequence of 9140 Station Controller options are not applicable for these arrangements.

Several 9140 Station Controller options may not be specified when a Model 40 ROP station is ordered. Unless the customer order specifies otherwise for such stations:

Choose 9140 Option	To Be
1.e.	DC1
1.f.	EOT
1.g.	ACK
1.h.	NULL
1.i.	DLE
1.j.	DLE

Also install these 9140 Station Controller Options: 2.b., 9.a. or 9.b., 11.a. or 11.b., 12.a., and 13.a.

ASCII Code (American National Standard Code for Information Interchange)

BITS			7	0				1			
			6	0		1		0		1	
			5	0	1	0	1	0	1	0	1
4	3	2	1								
0	0	0	0	NUL	DLE	SP	0	@	P	`	p
			1	SOH	DC1	!	1	A	Q	a	q
		1	0	STX	DC2	"	2	B	R	b	r
			1	ETX	DC3	#	3	C	S	c	s
	1	0	0	EOT	DC4	$	4	D	T	d	t
			1	ENQ	NAK	%	5	E	U	e	u
		1	0	ACK	SYN	&	6	F	V	f	v
			1	BEL	ETB	'	7	G	W	g	w
1	0	0	0	BS	CAN	(	8	H	X	h	x
			1	HT	EM	)	9	I	Y	i	y
		1	0	LF	SUB	*	:	J	Z	j	z
			1	VT	ESC	+	;	K	[	k	{
	1	0	0	FF	FS	,	<	L	\	l	¦
			1	CR	GS	-	=	M	]	m	}
		1	0	SO	RS	.	>	N	^	n	~
			1	SI	US	/	?	O	_	o	DEL

NOTE: Shaded boxes indicate characters with bit 8 "1" for even parity.

Example: Bits 1 through 7 of the bit permutation for the character M are 1011001, respectively.

1 = Mark 0 = Space

NUL — Null
SOH — Start of Heading
STX — Start of Text
ETX — End of Text
EOT — End of Transmission
ENQ — Enquiry
ACK — Acknowledge
BEL — Bell
BS — Back Space
HT — Horizontal Tab
NL — New Line
VT — Vertical Tab
FF — Form Feed
CR — Carriage Return
SO — Shift-Out
SI — Shift-In
DLE — Data Link Escape

DC1 — Device Control 1
DC2 — Device Control 2
DC3 — Device Control 3
DC4 — Device Control 4
NAK — Negative Acknowledge
SYN — Synchronous
ETB — End of Transmission Block
CAN — Cancel
EM — End of Media
SUB — Substitute
ESC — Escape
FS — Field Separator
GS — Group Separator
RS — Record Separator
US — Unit Separator
SP — Space
DEL — Delete

F. STATION ASSEMBLY (Cont)

Procedure 10 -- Option Information (Cont)

Options for 9140 Station Controller (Cont)

The circuit cards in the 9140 Station Controller are located in card connectors bearing the same letter designation as the initial letter designation on the circuit card. Card D1 is therefore located in the "D" card connector. A circuit card with a dash (-) in its designation is mounted piggyback on the card bearing the same letter designation. Card C2-2 is therefore mounted piggyback on card C2 in the "C" connector.

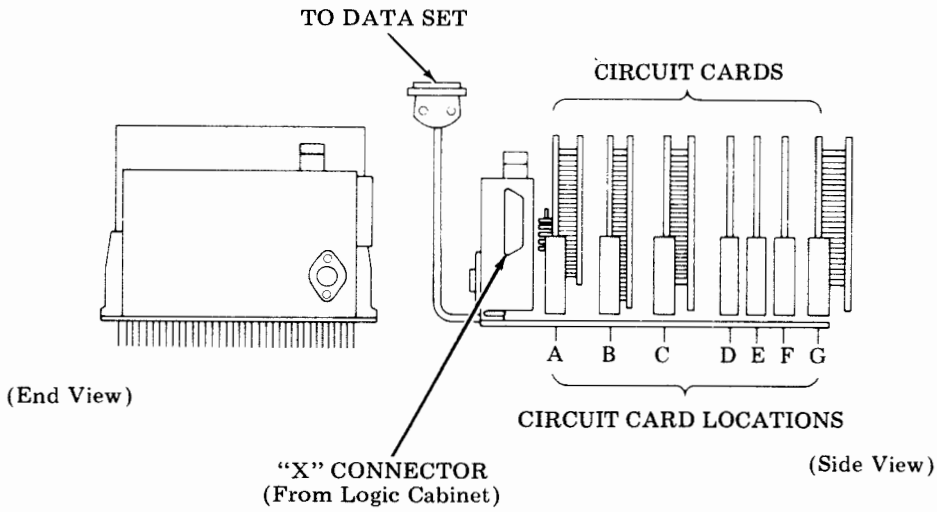

The following illustrations show the physical layout of the straps for programming the CDCs, TSCs, and some of the other 9140 Station Controller options.

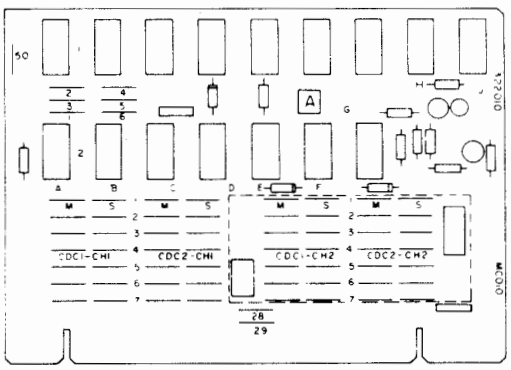

CDC Programming -- Card A

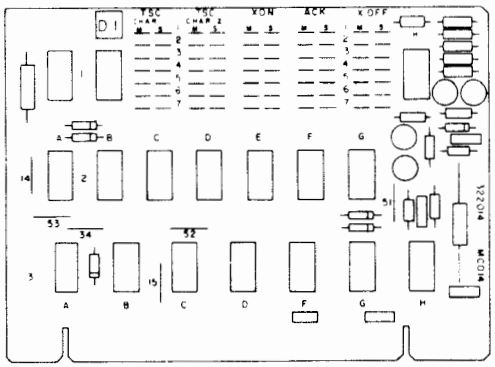

TSC and Miscellaneous Programming -- Card D1

1.	Variable Characters	Circuit Card	Coding Instructions
a.	Answer-Back Character 1	C2-2	Cut straps corresponding to marking levels. Close straps corresponding to spacing levels.
b.	Answer-Back Character 2	C2-2	
c.	Answer-Back Character 3 (Optional AB)	C2-2	
d.	Answer-Back Character 4 (Negative AB)	C2-2	
e.	Transmitter-On (X-ON)	D1	Cut straps labeled "M" for levels that are marking. Cut straps labeled "S" for levels that are spacing. Every level must have one strap cut. *Note 1:* **Card A-1 ordered separately. Not required if CDC3 is not required.** *Note 2:* **Card F2 ordered separately. Not required unless substitute character other than S_B is desired for KD or other than font ID character for printer.**
f.	Transmitter-Off (X-OFF)	D1	
g.	Acknowledge (ACK)	D1	
h.	FDX Interrupt	C2	
i.	Transmitter Start Code (TSC) Character 1	D1	
j.	Transmitter Start Code (TSC) Character 2	D1	
k.	Call Directing Code (CDC) 1, Character 1	A	
l.	Call Directing Code (CDC) 1, Character 2	A	
m.	Call Directing Code (CDC) 2, Character 1	A	
n.	Call Directing Code (CDC) 2, Character 2	A	
o.	Call Directing Code (CDC) 3, Character 1	A-1	
p.	Call Directing Code (CDC) 3, Character 2	A-1	
q.	**Substitute Character**	**F-2**	

2.	Number of Characters in TSC	Circuit Card D1 Strap 52
a.	Two Characters	○
b.	Two Characters Followed by Delete	●

3.	Unit Code of Answer-Back Characters Sent	Circuit Card B Strap 13
a.	10-Unit Code	○
b.	11-Unit Code	●

4.	Unit Code of Characters Sent	Circuit Card A Strap 50
a.	10-Unit Code	●
b.	11-Unit Code	○

● Indicates strap closed.
○ Indicates strap open.

F. STATION ASSEMBLY (Cont)

Procedure 10 -- Option Information (Cont)

Options for 9140 Station Controller (Cont)

		Circuit Card B
5.	Code Level of Characters Sent	Strap 30
a.	8-Unit Code	●
b.	7-Unit Code or Less	○

6.	HDX or FDX Sending (See Note Below Option 8.)	Card D1			Card E2			
		Straps	14	53	27	37	54	63
a.	FDX Sending		○	○	—	—	—	○
b.	HDX Store and Forward		○	●	—	—	—	○
c.	Stop After 2nd Non-Delete, Next Character Not On-Line		○	●	●	○	●	●
d.	Stop After 2nd Non-Delete, Next Character On-Line		○	●	○	●	●	●
e.	Stop On 1st Delete, Next Character Not On-Line		●	●	●	○	●	○
f.	Stop On 1st Delete, Next Character On-Line		●	●	○	●	●	○

7.	Local Copy on ROP of KD Send Data (KD&ROP Arrangements)	Circuit Card D1 Strap 15
a.	Local Copy (Can Be Used for KD&ROP)	○
b.	No Local Copy (May be Overridden by Option 13) (Choose for Other Arrangements or KD&ROP, if Desired)	●

8.	Regeneration of Sent Data (Requirements of Option 6.c. — 6.f. Override Option 8)	Card B	Card E2			
		Straps	26	27	37	54
a.	No Regeneration (See Note 2 Below)		○	○	●	○
b.	Regeneration		●	●	○	●

NOTE 1: If Option 9.a. is selected, Option 6.a. must be selected. Straps 53 and 34 must not both be closed with straps.

NOTE 2: Strap 37 must be open in ROP application; do not install Option 8.a.

— Condition of strap does not affect this option.
● Indicates strap closed.
○ Indicates strap open.

		Card C2	Card D1
9.	Interrupt Feature (See Notes Below Option 8.)	Straps – 62	34
a.	Stop on FDX Interrupt and Blind Receive Data, Start on STX (See Note 1 Below Option 8.)	●	●
b.	Does Not Stop on FDX Interrupt, STX Has No Effect	O	O

		Circuit Card D1
10.	Function of EOT Sent by Terminal	Strap 51
a.	EOT Deselects 9140 Sender	●
b.	EOT Does Not Deselect Sender	O

NOTE: If Option 10.a. of 9140 Station Controller is selected, Option 8.e. of Model 40 Terminal should also be selected.

		Circuit Card C3				
11.	Delay in Turning Off Carrier	Straps -	69	70	71	72
a.	Retain Until Last Character Is Sent		●	●	O	●
b.	Retain for One Character After Interrupt		●	O	●	O
c.	Retain for Three Characters After Interrupt		O	O	●	O

		Circuit Card C2-2			
12.	1st or 2nd A/B Character Restarts Sender, or Sender Does Not Stop for A/B at All	Straps -	58	59	60
a.	2nd Character (If Option 6.c., 6.d., 6.e., or 6.f. Must be Used)		O	●	O
b.	1st Character (If Option 6.c., 6.d., 6e., or 6.f. Is Used) or Does Not Stop (If Option 6.a. or 6.b. Is Used)		●	O	●

		Circuit Card E2		
13.	Local ROP Copy of KD Send Data Provided/Not Provided by 9140	Straps -	75	76
a.	Copy All Sent Data and Answer-Backs		●	●
b.	Copy Sent Data Only After STX is Sent		O	O

NOTE: Local KDP printer or KD-ROP printer copy will be provided regardless of the status of Option 7 or 13, provided PRINT ON LINE key is lighted and Model 40 Option 29.a. is chosen.

		Circuit Card A			
14.	Number of Characters in CDC1 (Exclusive of Delete, if Used)	Straps -	1	2	3
a.	One Character CDC		●	O	●
b.	Two Character CDC		O	●	●

● Indicates strap closed.
O Indicates strap open.

F. STATION ASSEMBLY (Cont)

Procedure 10 -- Option Information (Cont)

Options for 9140 Station Controller (Cont)

15.	Number of Characters in CDC2 (Exclusive of Delete, if Used)	Circuit Card A			
		Straps -	4	5	6
a.	One Character CDC		●	○	●
b.	Two Character CDC		○	●	●
c.	No CDC2 (See Note.)		○	○	○

NOTE: If no CDC2 is used, program the CDC2 characters (Options 1.m and 1.n.) identical to CDC1 (Options 1.k. and 1.l.) and install Option 15.c.

16.	Number of Characters in CDC3 (Exclusive of Delete, if Used)	Circuit Card A-1		
		Straps -	10	11
a.	One Character CDC		●	○
b.	Two Character CDC		○	●
c.	No CDC3	Remove Card A-1		

NOTE: Card A-1 not present on all stations.

17.	Answer-Back Generated for CDCs	Circuit Card C2				
		Straps -	7	8	9	35
a.	Answer-Back to CDC1 (No Delete After CDC)		–	–	●	○
b.	Answer-Back to CDC1 After Delete		–	–	●	●
c.	No Answer-Back to CDC1		–	–	○	–
d.	Answer-Back to CDC2 (No Delete After CDC)		●	–	–	○
e.	Answer-Back to CDC2 After Delete		●	–	–	●
f.	No Answer-Back to CDC2		○	–	–	–
g.	Answer-Back to CDC3 (No Delete After CDC)		–	●	–	○
h.	Answer-Back to CDC3 After Delete		–	●	–	●
i.	No Answer-Back to CDC3		–	○	–	–

18.	Type of Answer-Back to TSC	Circuit Card C2-2
		Strap 20
a.	Same as Ready-to-Receive to a CDC Only When DTR is On	○
b.	Same as Ready-to-Receive to a CDC (Independent of DTR)	●

19.	Answer-Back to CDC (Observe That, for Example, Option 17.c. Can Override Option 19.a. or 19.b.)	Card A			Card A-1
		Straps -	28	29	31
a.	Answer-Back CDC1 Always		○	–	–
b.	Answer-Back to CDC1 Only When Ready-to-Receive		●	–	–
c.	Answer-Back to CDC2 Always		–	○	–

– Condition of strap does not affect this option.
● Indicates strap closed.
○ Indicates strap open.

19.	Answer-Back to CDC (Observe That, for Example, Option 17.c. Can Override Option 19.a. or 19.b.) (Continued)	Card A			Card A-1
		Straps -	28	29	31
d.	Answer-Back to CDC2 Only When Ready-to-Receive		—	●	—
e.	Answer-Back to CDC3 Always		—	—	○
f.	Answer-Back to CDC3 When Ready-to-Receive		—	—	●

20.	Optional Answer-Back to CDC or TSC (See Note Below.)	Circuit Card C2-2		
		Straps -	73	74
a.	Optional Negative Answer-Back		●	○
b.	Optional Positive Answer-Back (CDC Only)		○	●
c.	No Optional Answer-Back		○	○
d.	Optional Positive and Negative Answer-Back		●	●

NOTE: If "send mode response" is required, then a 197464 diode must be present between XZC-A5 and XZD-A16 (blocking toward XZD-A16).

XZC-A5 >—▷|—< XZD-A16

21.	Response Delay for Motor Start-Up	Circuit Card C2-2 Strap 68
a.	Nominal 2-Second Delay	○
b.	Nominal 200-Millisecond Delay	●

22.	Received Vertical Parity Error Response	Circuit Card C2 Strap 16
a.	Odd Parity Causes Line Break	●
b.	Odd Parity Does Not Cause Line Break	○

23.	Loss of DTR Response	Circuit Card C2 Strap 17
a.	Loss of DTR Causes Line Break and Disconnect	●
b.	Loss of DTR Does Not Cause Line Break and Disconnect	○

24.	Type of F Card Used	Circuit Card E2 Strap 61
a.	F1 Circuit Card	●
b.	F2 Circuit Card	○

— Condition of strap does not affect this option.
● Indicates strap closed.
○ Indicates strap open.

F. STATION ASSEMBLY (Cont)

Procedure 10 -- Option Information (Cont)

Options for 9140 Station Controller (Cont)

25.	9140 Recognition of SOH and ETX	Circuit Card F1			
		Straps -	64	65	66
a.	SOH Only (See Note 1.)		●	O	O
b.	ETX Only (Action of ETX Requires Local Engineering)		O	●	O
c.	Both SOH and ETX		O	O	O
d.	Neither SOH nor ETX		O	O	●

NOTE 1: If customer requires SOH to act like STX, strap XZF-B29 to XZF-B31.

NOTE 2: Option 25 choice has no effect on selection of ETX as FDX -- INT character.

26.	Data Set Interface	Circuit Card E2		
		Straps -	38	39
a.	Gate Data Set CTS With 9140 Signals		O	—
b.	Do Not Gate Data Set CTS With 9140 Signals		●	—
c.	Gate Data Set DSR With 9140 Signals		—	O
d.	Do Not Gate Data Set DSR With 9140 Signals		—	●

Alarm/Parity Error Response Modification Kit (345625)

27.	Alarm Time and Reset on STX or EOT	Circuit Card 322641			
		Straps -	X	Y	Z
a.	30-Second Alarm (See Note Below.)		—	O	O
b.	60-Second Alarm (See Note Below.)		—	●	O
c.	90-Second Alarm (See Note Below.)		—	●	●
d.	Initialize Optional A/B Circuit on STX or EOT		●	—	—
e.	Initialize Optional A/B Circuit on EOT		O	—	—

NOTE: Audible Alarm on receipt of CDC if not ready to receive (DTR off).

— Condition of strap does not affect this option.
● Indicates strap closed.
O Indicates strap open.

STATION FEATURE AND OPTION RECORD

KD OR KDP CONTROLLER

1.a.	☐	9.a.	☐	36.a.	☐
1.b.	☐	9.b.	☐	36.b.	☐
2.a.	☐	10.a.	☐	37.a.	☐
2.b.	☐	10.b.	☐	37.b.	☐
3.a.	☐	10.c.	☐	40.a.	☐
3.b.	☐	11.a.	☐	40.b.	☐
3.c.	☐	11.b.	☐	41.a.	☐
3.d.	☐	11.c.	☐	41.b.	☐
3.e.	☐	12.a.	☐	42.a.	☐
3.f.	☐	12.b.	☐	42.b.	☐
3.g.	☐	13.a.	☐	42.c.	☐
3.h.	☐	13.b.	☐	42.d.	☐
3.i.	☐	13.c.	☐	43.a.	☐
3.j.	☐	13.d.	☐	43.b.	☐
4.a.	☐	13.e.	☐	44.a.	☐
4.b.	☐	13.f.	☐	44.b.	☐
5.a.	☐	13.g.	☐	45.a.	☐
5.b.	☐	13.h.	☐	45.b.	☐
5.c.	☐	27.a.	☐	46.a.	☐
5.d.	☐	27.b.	☐	46.b.	☐
5.e.	☐	28.a.	☐	47.a.	☐
5.f.	☐	28.b.	☐	47.b.	☐
5.g.	☐	29.a.	☐	49.a.	☐
5.h.	☐	29.b.	☐	49.b.	☐
5.i.	☐	29.c.	☐	50.a.	☐
5.j.	☐	29.d.	☐	50.b.	☐
6.a.	☐	30.a.	☐	50.c.	☐
6.b.	☐	30.b.	☐	51.a.	☐
7.a.	☐	31.a.	☐	51.b.	☐
7.b.	☐	31.b.	☐	52.a.	☐
8.a.	☐	32.a.	☐	52.b.	☐
8.b.	☐	32.b.	☐	53.a.	☐
8.c.	☐	33.a.	☐	53.b.	☐
8.d.	☐	33.b.	☐		
8.e.	☐	34.a.	☐		
8.f.	☐	34.b.	☐		
8.g.	☐	35.a.	☐		
8.h.	☐	35.b.	☐		

ROP CONTROLLER

3.a.	☐
3.b.	☐
24.a.	☐
24.b.	☐
25.a.	☐
25.b.	☐
25.c.	☐
25.d.	☐
35.a.	☐
35.b.	☐
36.a.	☐
36.b.	☐
38.a.	☐
38.b.	☐

PRINTER

	I	II
17.c.	☐	☐
17.d.	☐	☐
17.e.	☐	☐
17.f.	☐	☐
17.g.	☐	☐
17.h.	☐	☐
17.i.	☐	☐
17.j.	☐	☐
17.k.	☐	☐
17.l.	☐	☐
17.m.	☐	☐
17.n.	☐	☐
17.o.	☐	☐
17.p.	☐	☐
18.a.	☐	☐
18.b.	☐	☐
18.c.	☐	☐
19.a.	☐	☐
19.b.	☐	☐
19.c.	☐	☐
19.d.	☐	☐
19.e.	☐	☐
19.f.	☐	☐
19.g.	☐	☐
20.a.	☐	☐
20.b.	☐	☐
21.a.	☐	☐
21.b.	☐	☐
22.a.	☐	☐
22.b.	☐	☐
23.a.	☐	☐
23.b.	☐	☐
39.a.	☐	☐
39.b.	☐	☐

9140 STATION CONTROLLER

1.a.	___	16.c.	☐
1.b.	___	17.a.	☐
1.c.	___	17.b.	☐
1.d.	___	17.c.	☐
1.e.	___	17.d.	☐
1.f.	___	17.e.	☐
1.g.	___	17.f.	☐
1.h.	___	17.g.	☐
1.i.	___	17.h.	☐
1.j.	___	17.i.	☐
1.k.	___	18.a.	☐
1.l.	___	18.b.	☐
1.m.	___	19.a.	☐
1.n.	___	19.b.	☐
1.o.	___	19.c.	☐
1.p.	___	19.d.	☐
2.a.	☐	19.e.	☐
2.b.	☐	19.f.	☐
3.a.	☐	20.a.	☐
3.b.	☐	20.b.	☐
4.a.	☐	20.c.	☐
4.b.	☐	20.d.	☐
5.a.	☐	21.a.	☐
5.b.	☐	21.b.	☐
6.a.	☐	22.a.	☐
6.b.	☐	22.b.	☐
6.c.	☐	23.a.	☐
6.d.	☐	23.b.	☐
6.e.	☐	24.a.	☐
6.f.	☐	24.b.	☐
7.a.	☐	25.a.	☐
7.b.	☐	25.b.	☐
8.a.	☐	25.c.	☐
8.b.	☐	25.d.	☐
9.a.	☐	26.a.	☐
9.b.	☐	26.b.	☐
10.a.	☐	26.c.	☐
10.b.	☐	26.d.	☐
11.a.	☐	27.a.	☐
11.b.	☐	27.b.	☐
11.c.	☐	27.c.	☐
12.a.	☐	27.d.	☐
12.b.	☐	27.e.	☐
13.a.	☐		
13.b.	☐		
14.a.	☐		
14.b.	☐		
15.a.	☐		
15.b.	☐		
15.c.	☐		
16.a.	☐		
16.b.	☐		

SET VARIATIONS

Mono-Case	☐
Upper-Lower Case	☐
24-Line Display	☐
48-Line Display	☐
72-Line Display	☐
Pedestal	☐
Paper Winder	☐
Copyholder	☐
1000 Character Buffer	☐

F. STATION ASSEMBLY (Cont)

Procedure 11 -- Cabling

NOTE: Additional cabling information for all applications is found in PART 5.

Index of Figures

40/1 40/2	Fig. 1--ROP, Friction Feed -- 40/1, 40/2
	Fig. 2--ROP, Tractor Feed (80-Column) -- 40/1, 40/2
	Fig. 3--KD -- 40/1, 40/2
	Fig. 4--KD With ROP (132-Column) -- 40/3
	Fig. 5--KDP Pedestal-Mounted, Friction Feed Printer Under Monitor -- 40/1, 40/2
	Fig. 6--KDP Pedestal-Mounted, Friction Feed Printer -- 40/1, 40/2
	Fig. 7--KDP Pedestal-Mounted, 80-Column Tractor Feed Printer Adjacent -- 40/1, 40/2
	Fig. 8--KDP Table-Mounted, Adjacent Logic Friction Feed Printer Under Monitor -- 40/1, 40/2
	Fig. 9--KDP Table-Mounted, Adjacent Friction Feed Printer -- 40/1, 40/2
	Fig. 10--KDP Table-Mounted, Adjacent Tractor Feed Printer (80-Column) -- 40/1, 40/2
40/3	Fig. 11--ROP, Friction Feed -- 40/3
	Fig. 12--ROP, Tractor Feed --40/3
	Fig. 13--KD -- 40/3
	Fig. 14--KDP Printer Adjacent, Friction Feed (80-Column) -- 40/3
	Fig. 15--KDP Printer Adjacent, Tractor Feed (80-Column) -- 40/3
	Fig. 16--KDP Printer Under Monitor, Friction Feed -- 40/3
	Fig. 17--KD With ROP -- 40/3
	Fig. 18--KD and ROP -- 40/3
	Fig. 19--KDP and ROP -- 40/3 (KDP printer is adjacent; ROP printer is friction or tractor feed)
	Fig. 20--KDP and ROP -- 40/3 (KDP printer is under monitor; ROP printer is friction or tractor feed)

*NOTE: The 341896 nonshielded cable may be replaced by the following shielded cables of various lengths, as follows:

*New shielded cables

CABLE PART NO.	TOTAL CABLE LENGTH
408065	7 FT
408066	12 FT
408067	25 FT
408068	50 FT

The 341896 cable is used in 40/1, 40/2, and 40/3 applications as shown in the various figures on this page and the following pages.

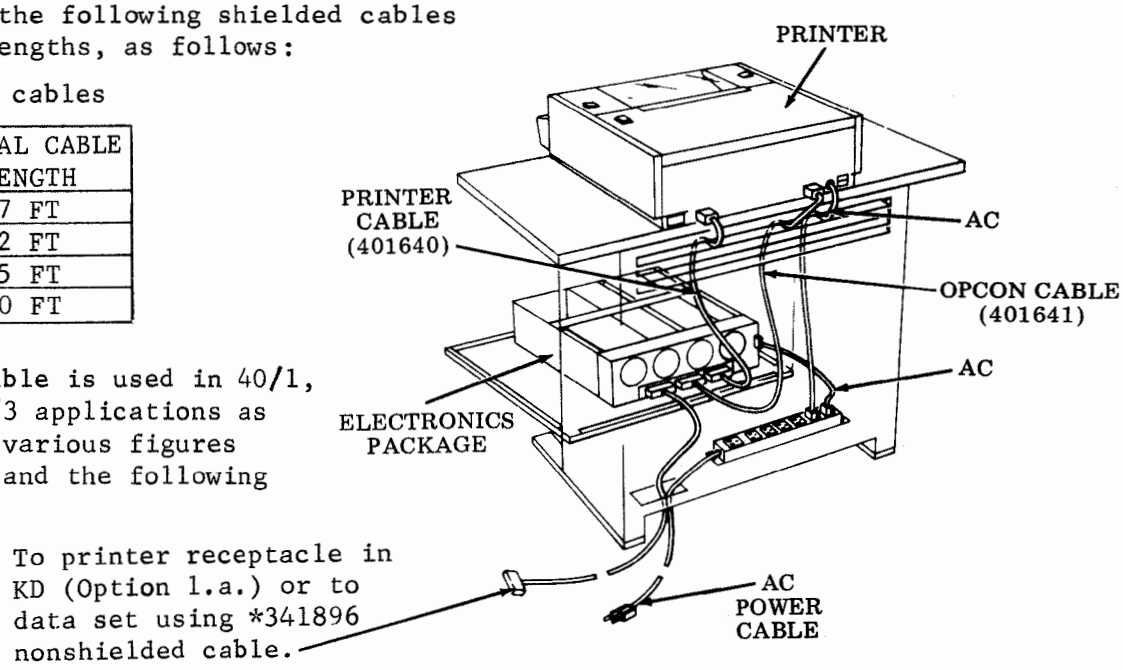

Fig. 1--ROP, Friction Feed -- 40/1, 40/2

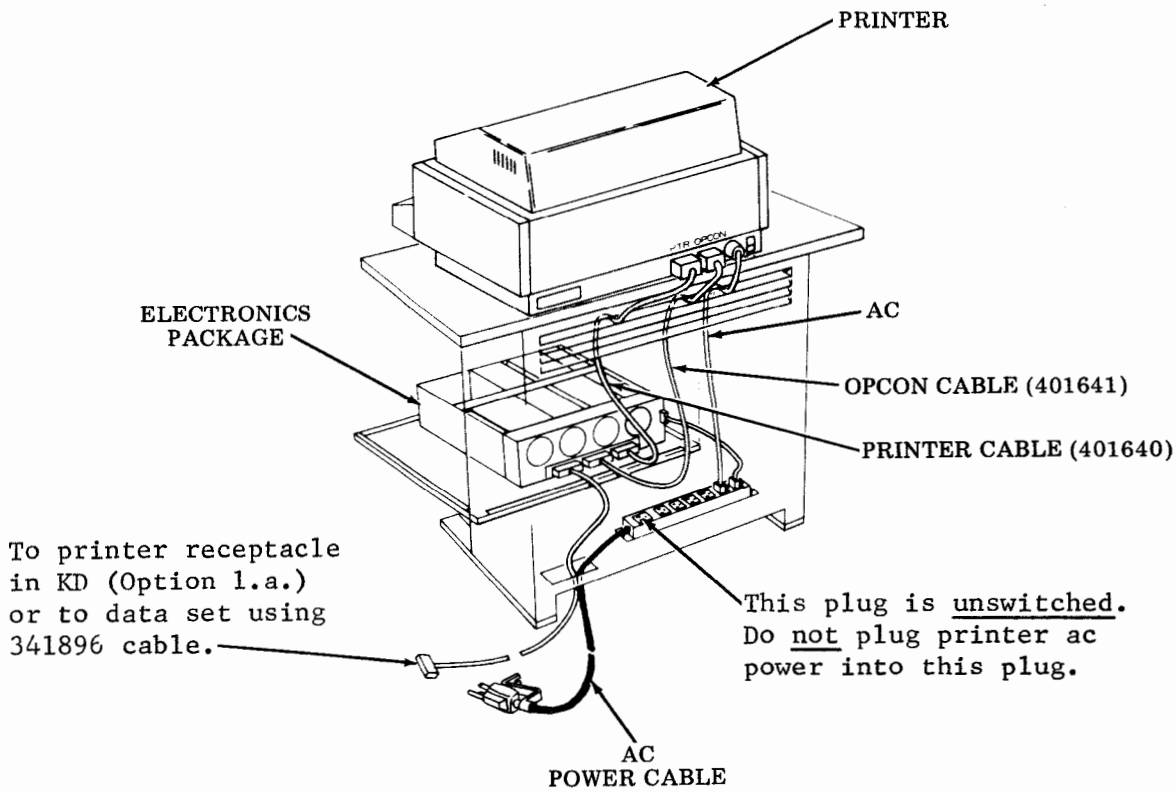

Fig. 2--ROP, Tractor Feed (80-Column) -- 40/1, 40/2

F. STATION ASSEMBLY (Cont)

Procedure 11 -- Cabling (Cont)

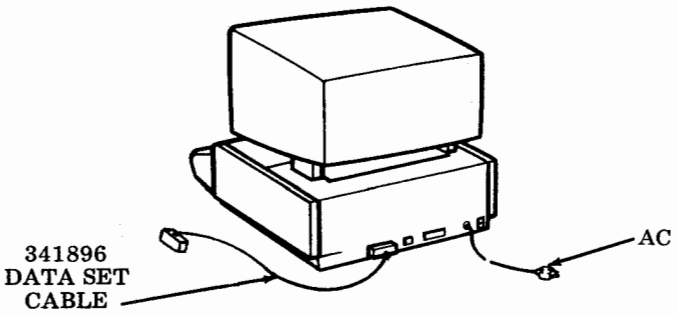

Fig. 3--KD -- 40/1, 40/2

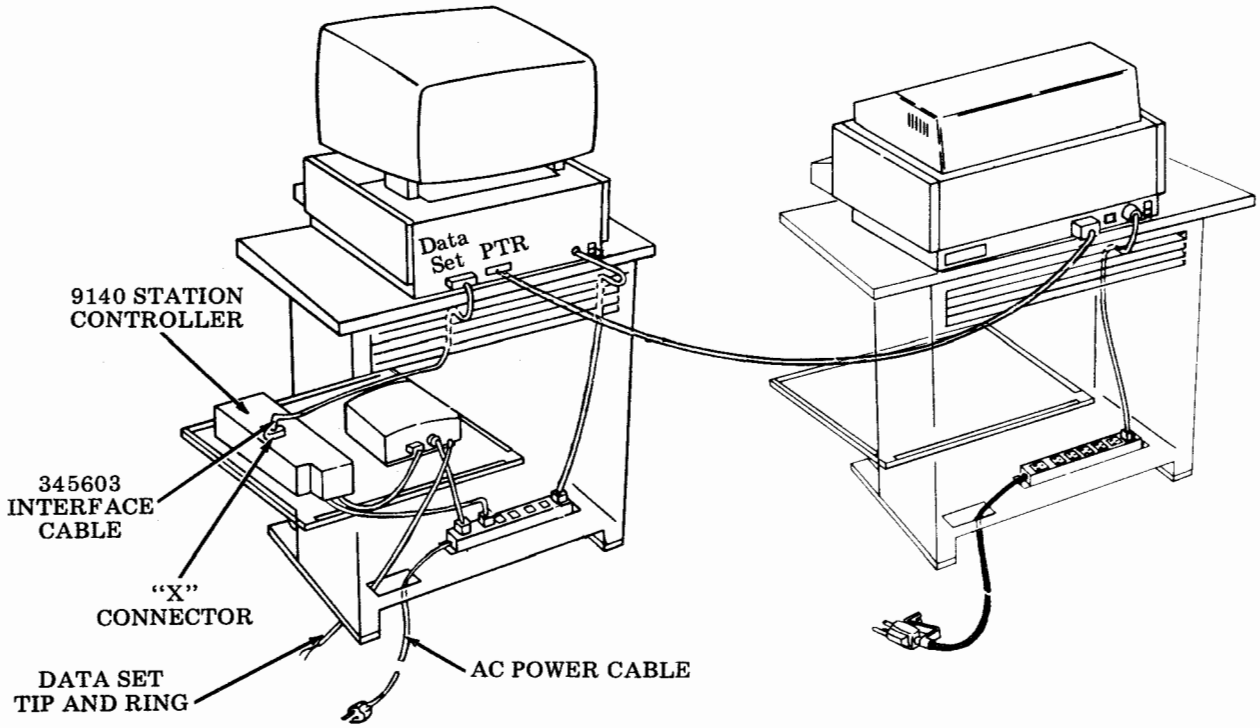

Fig. 4--KD With ROP (132-Column) -- 40/3

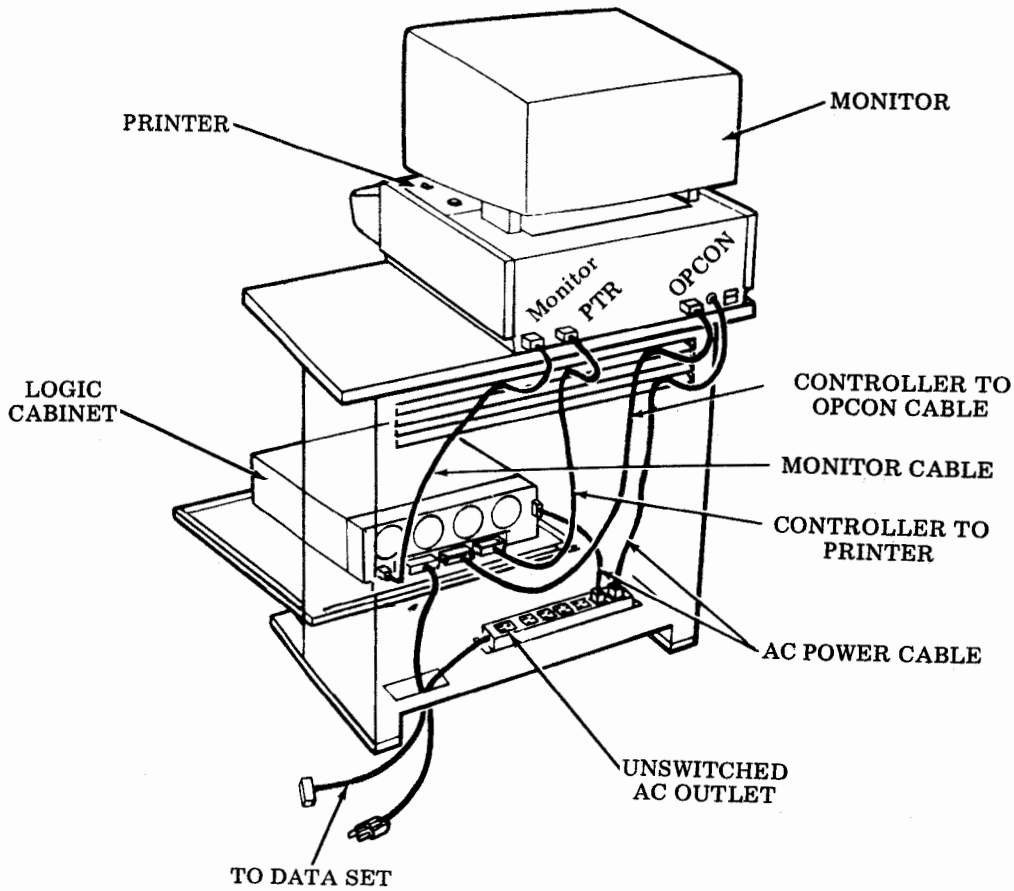

Fig. 5--KDP Pedestal-Mounted, Friction Feed Printer Under Monitor -- 40/1, 40/2

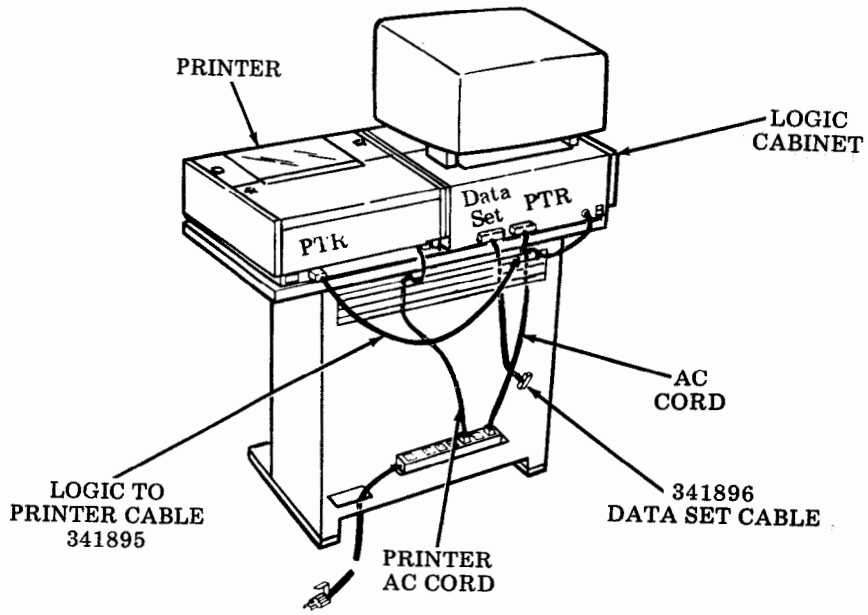

Fig. 6--KDP Pedestal-Mounted, Friction Feed Printer -- 40/1, 40/2

F. STATION ASSEMBLY (Cont)

Procedure 11 -- Cabling (Cont)

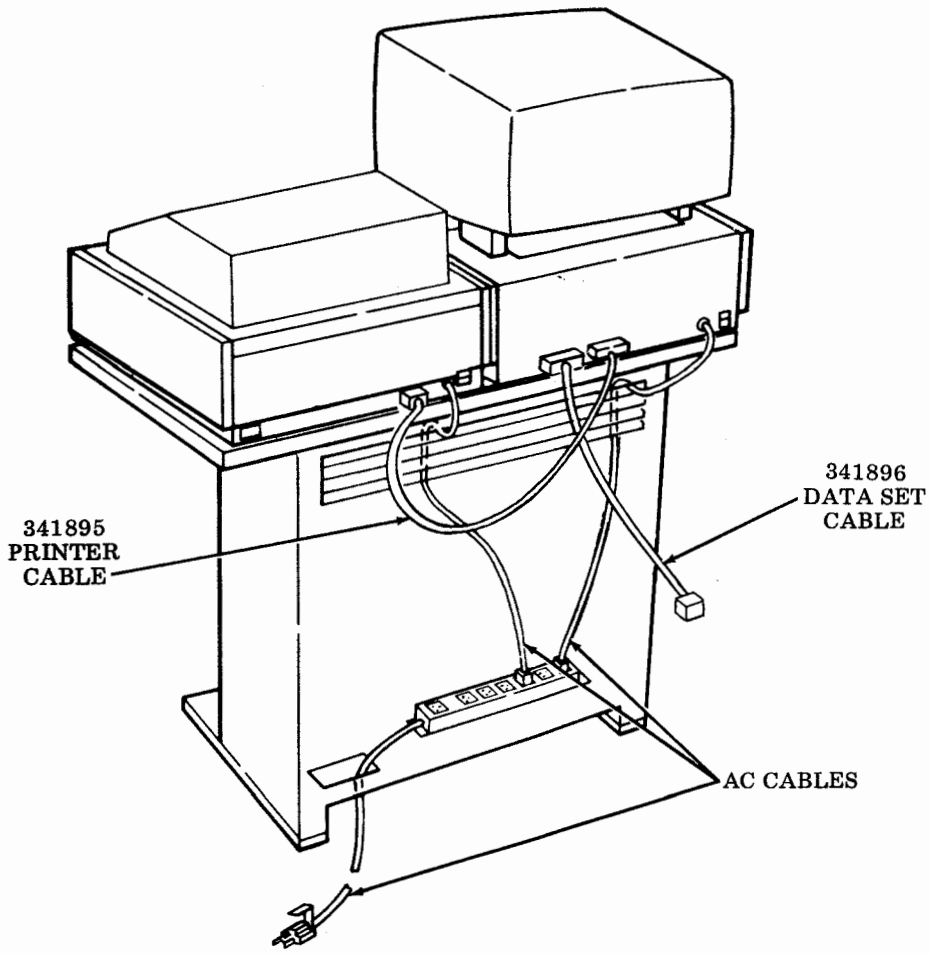

Fig. 7--KDP Pedestal-Mounted, 80-Column Tractor Feed Printer Adjacent -- 40/1, 40/2

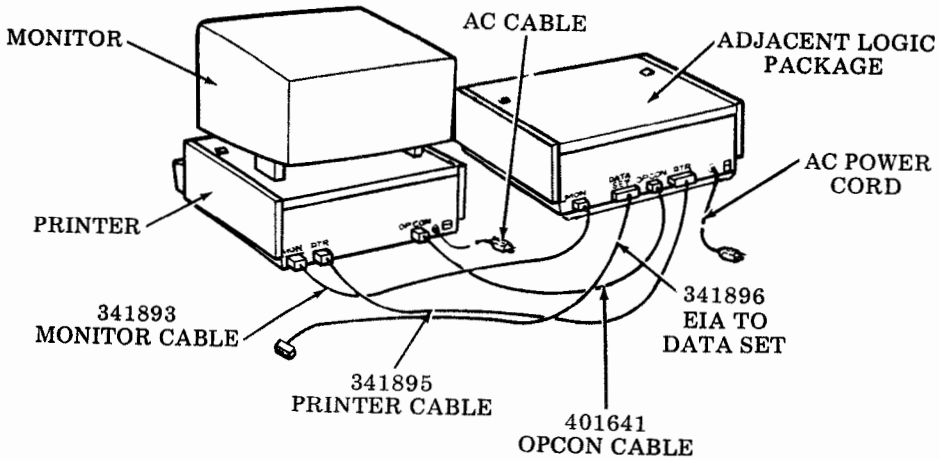

Fig. 8--KDP Table-Mounted, Adjacent Logic Friction Feed Printer Under Monitor -- 40/1, 40/2

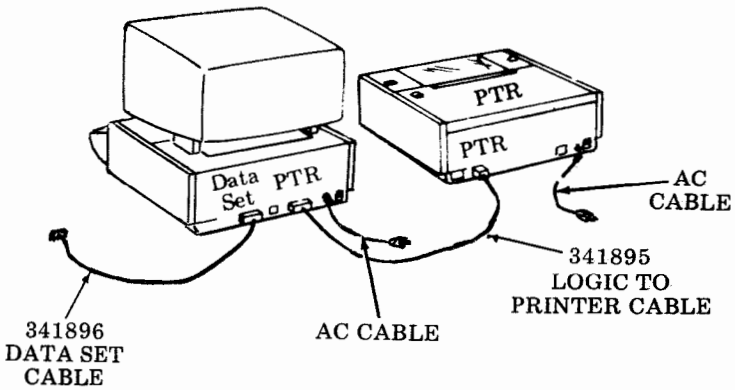

Fig. 9--KDP Table-Mounted, Adjacent Friction Feed Printer -- 40/1, 40/2

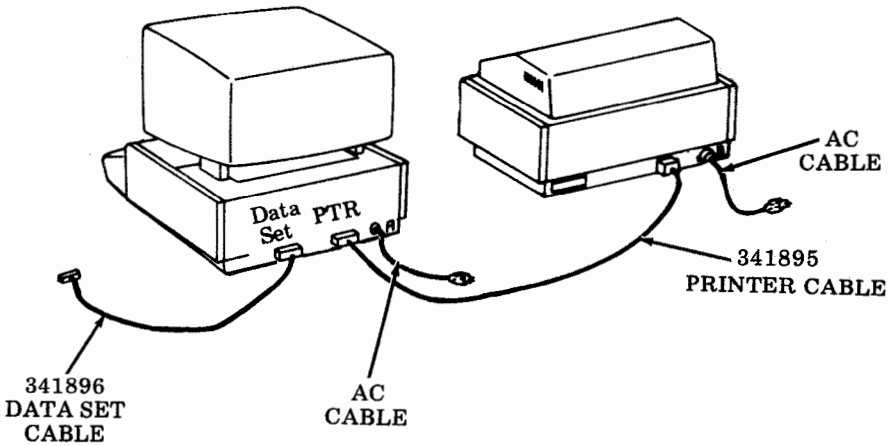

Fig. 10--KDP Table-Mounted, Adjacent Tractor Feed Printer (80-Column) -- 40/1, 40/2

F. STATION ASSEMBLY (Cont)

Procedure 11 -- Cabling (Cont)

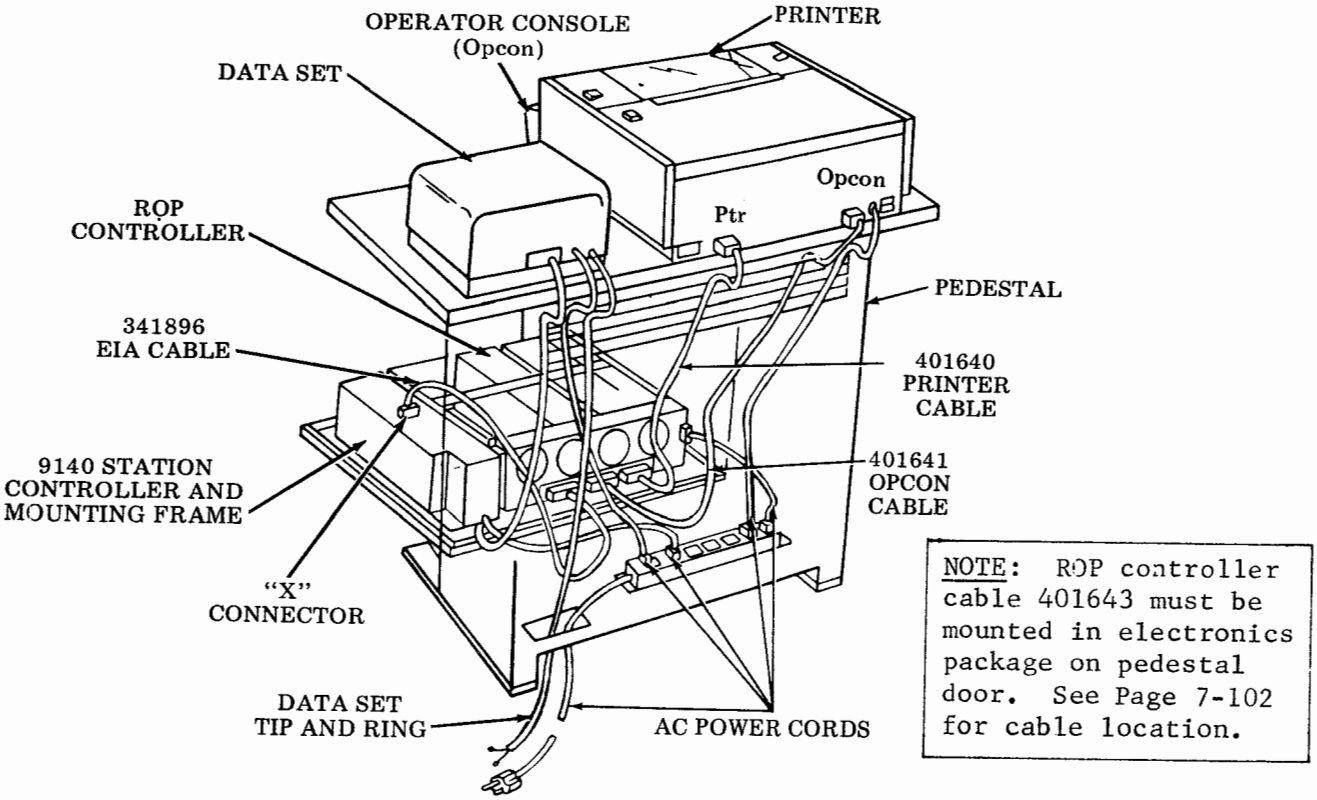

Fig. 11--ROP, Friction Feed -- 40/3

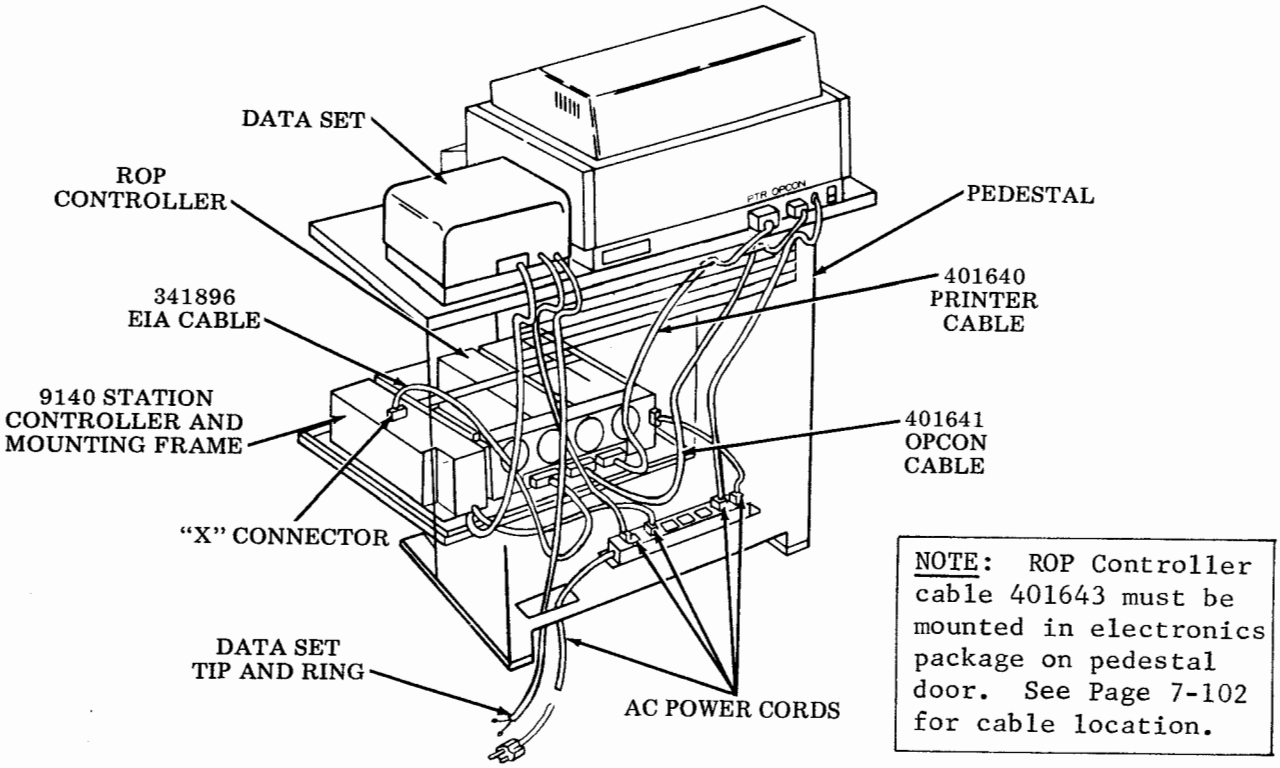

Fig. 12--ROP, Tractor Feed -- 40/3

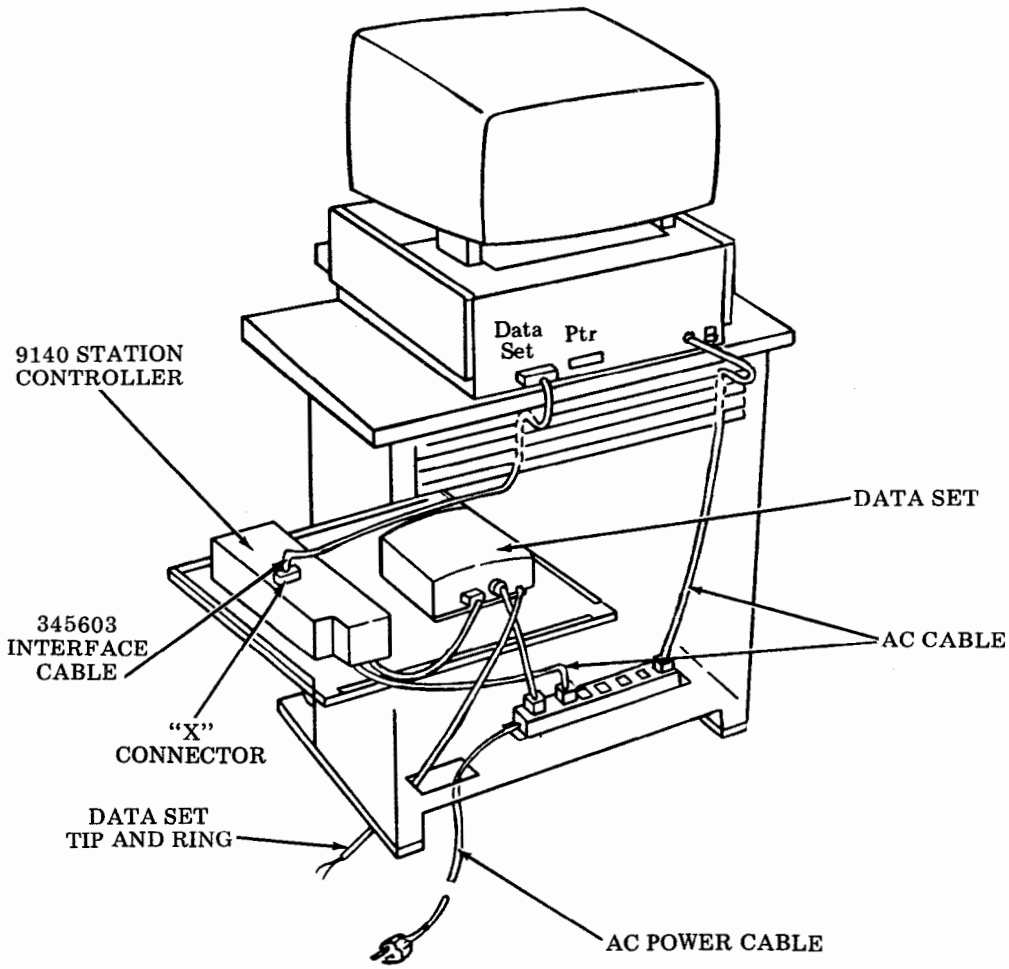
Data Set
Ptr
9140 STATION CONTROLLER
DATA SET
345603 INTERFACE CABLE
AC CABLE
"X" CONNECTOR
DATA SET TIP AND RING
AC POWER CABLE

Fig. 13--KD -- 40/3

F. STATION ASSEMBLY (Cont)

Procedure 11 -- Cabling (Cont)

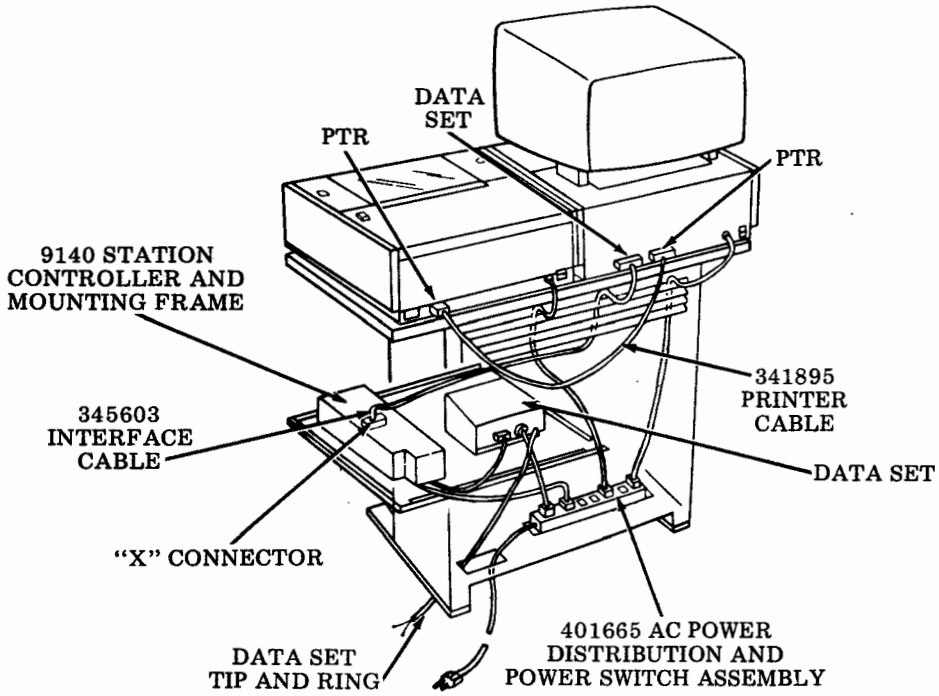

Fig. 14--KDP Printer Adjacent, Friction Feed (80-Column) -- 40/3

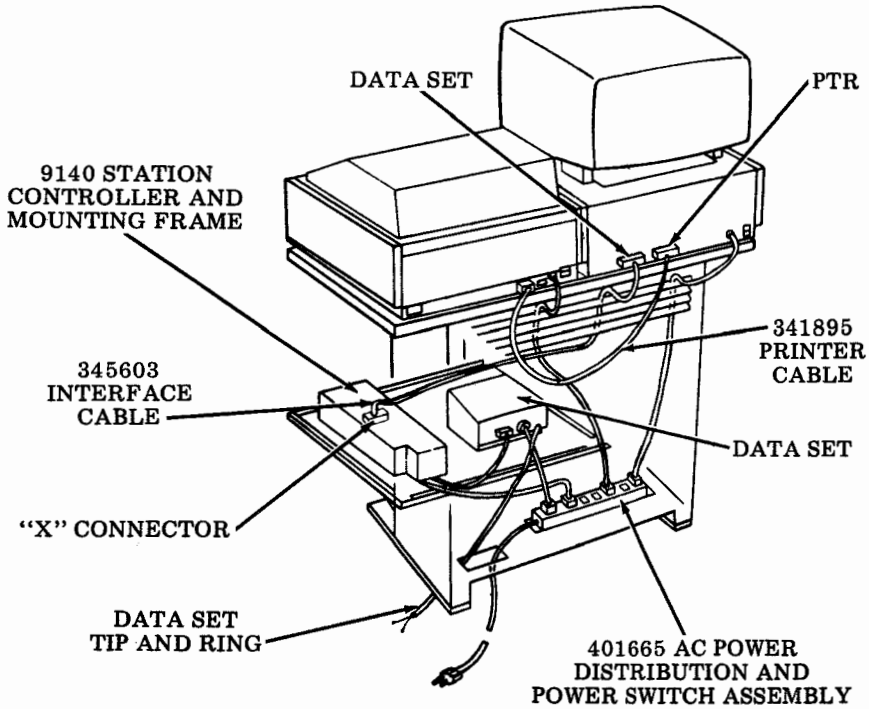

Fig. 15--KDP Printer Adjacent, Tractor Feed (80-Column) -- 40/3

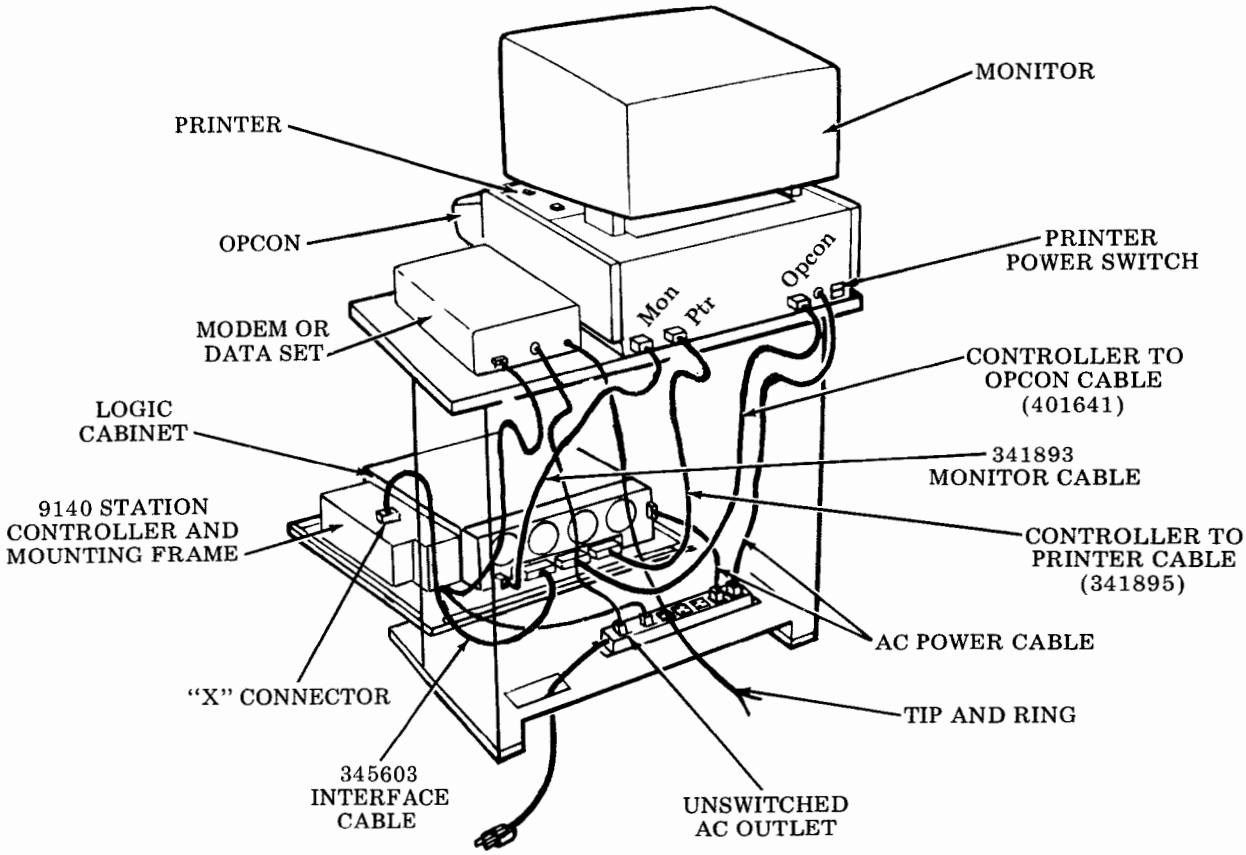

Fig. 16--KDP Printer Under Monitor, Friction Feed (80-Column) -- 40/3

F. STATION ASSEMBLY (Cont)

Procedure 11 -- Cabling (Cont)

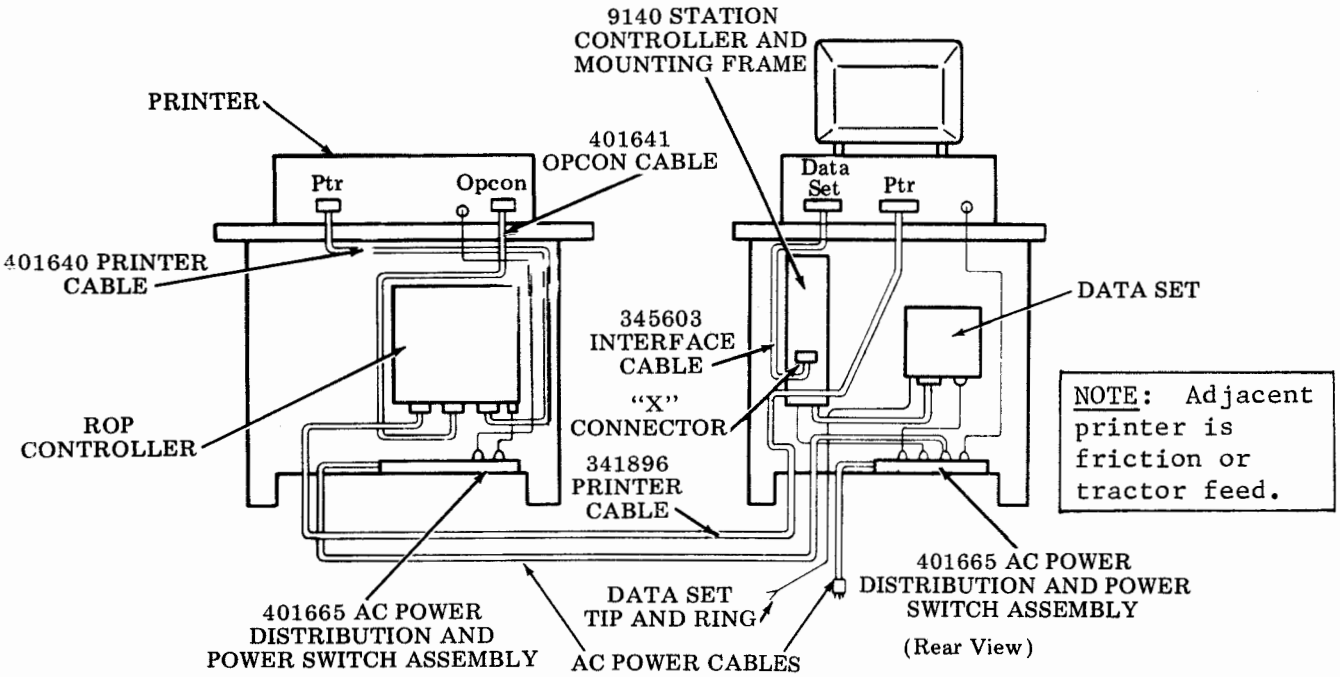

Fig. 17--KD With ROP -- 40/3

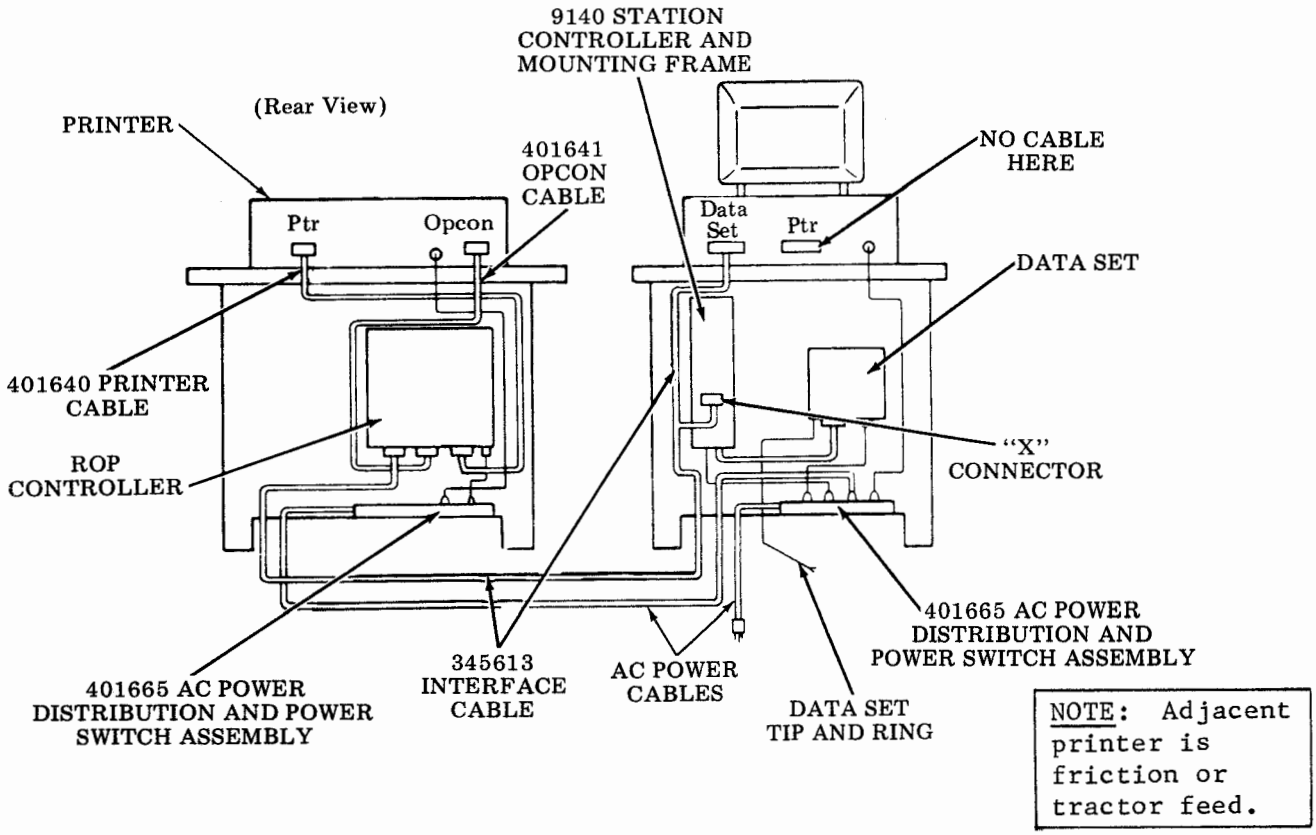

Fig. 18--KD and ROP -- 40/3

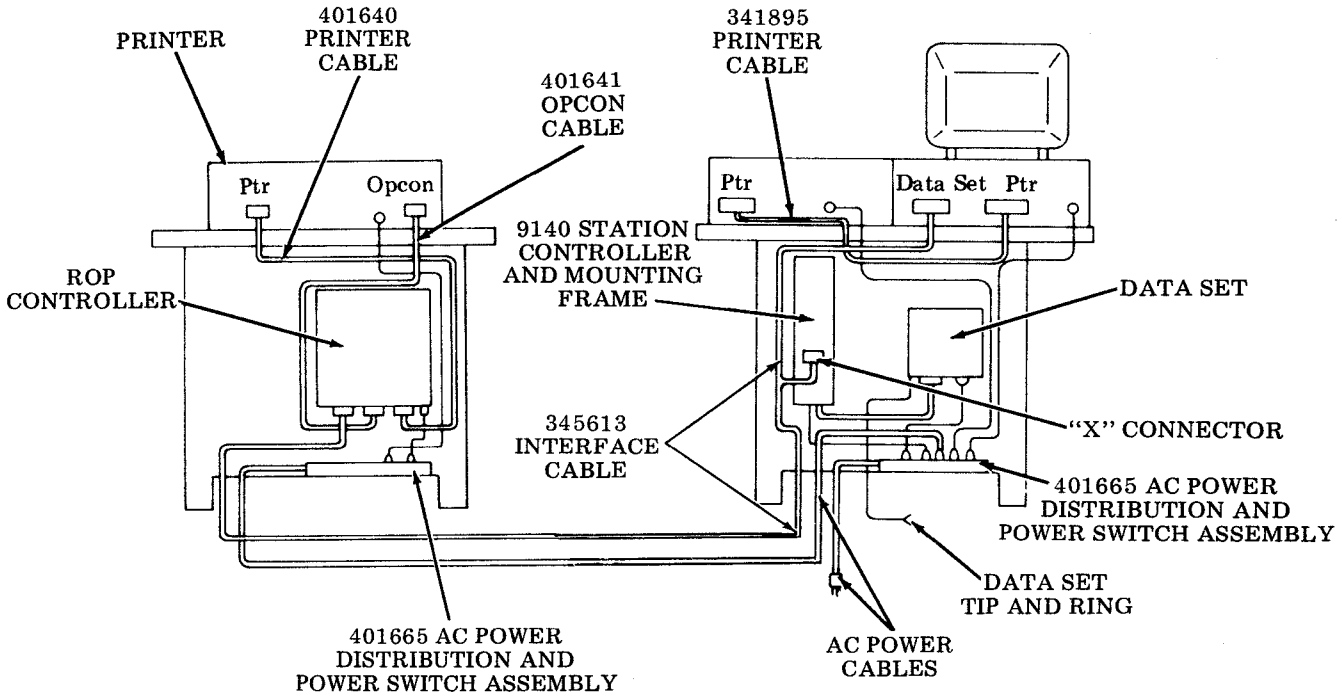

NOTE: Adjacent KDP printer is friction or tractor feed.

Fig. 19--KDP and ROP -- 40/3

NOTE: Printer under monitor is friction feed only. ROP printer is friction or tractor feed.

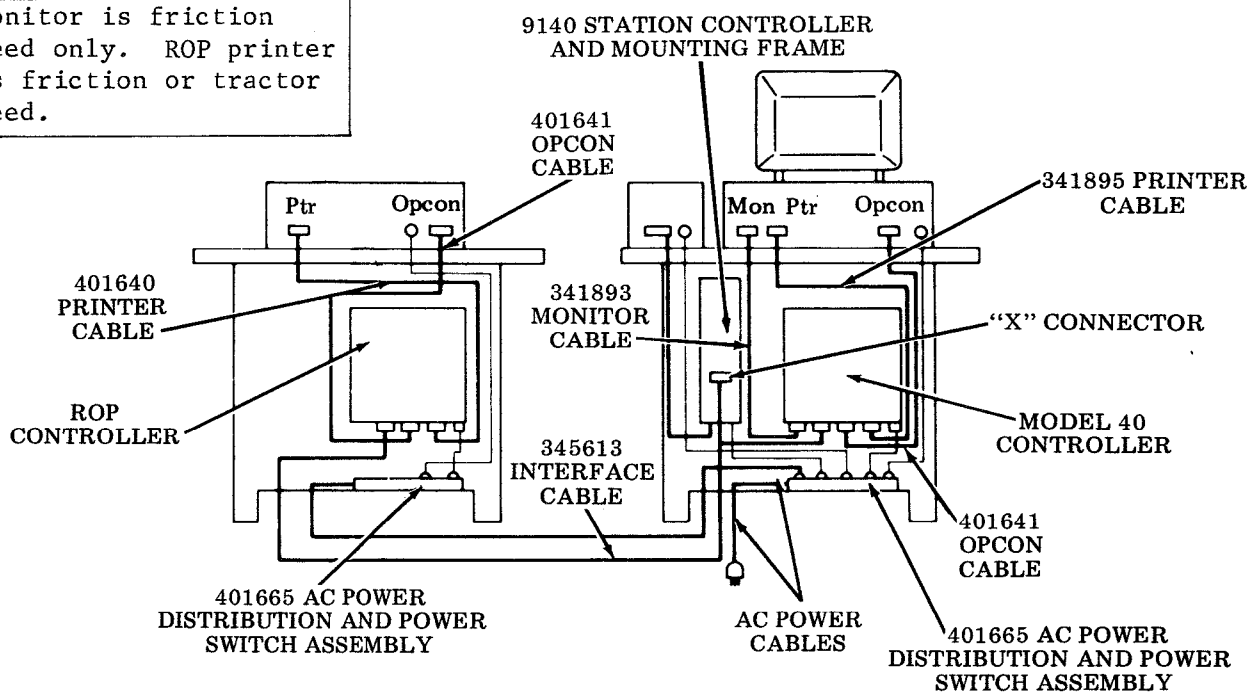

Fig. 20-- KDP and ROP -- 40/3

PART 3 — OPERATIONAL CHECKOUT

INDEX PAGE

A. GENERAL 1
B. PRELIMINARY CHECK 2
C. BRIEF OFF-LINE CHECKOUT -- KD AND KDP TERMINALS. 3
D. COMPLETE OFF-LINE CHECKOUT -- KD AND KDP TERMINALS 6
E. OFF-LINE CHECKOUT -- ROP TERMINALS 25

A. GENERAL

An operational checkout should be performed after installation or on trouble calls. It may be a brief checkout to make sure the station is operable, or a complete checkout to exercise all features and options. Both types of checkout are provided. Since off-line checkout procedures do not check the interface or send and receive capabilities, an on-line checkout is also required to completely test the Model 40.

With the Model 40 properly interfaced to the system where it will be used, conduct a complete checkout of send and receive capabilities taking into account all option and feature variables. Check all operational modes in sending to or receiving from another station in the system.

Use the brief checkout upon installation if a complete checkout has been performed prior to installation. Continue with a complete checkout, if needed, to check all features and options.

On maintenance or trouble calls at a location, confine the checkout to the specified trouble area. Use the brief checkout to isolate poorly defined trouble areas. Perform a complete checkout after an extensive repair.

The checkout routines are presented in tables. Each table is identified as to the type of station under test, and the nature of the checkout procedures:

C. BRIEF OFF-LINE CHECKOUT -- KD AND KDP TERMINALS

D. COMPLETE OFF-LINE CHECKOUT -- KD AND KDP TERMINALS

E. OFF-LINE CHECKOUT -- ROP TERMINALS

If the indicated response is not obtained in any step of a checkout procedure, repeat the step to make sure that the procedure has been performed correctly. If the results are still unsatisfactory, perform the indicated trouble analysis. Always perform the checkout in the order given in the table. The trouble analysis steps are based on satisfactory results of all previous steps.

B. PRELIMINARY CHECK

Before turning on any equipment, check the following:

a. Is station connected to a properly grounded ac service?
b. Are all circuit cards and cable connectors fully seated?
c. Are all cabinet lids and pedestal doors closed?
d. In KDP and ROP, are printer paper and ribbon properly installed?

In addition to the above, check the Station Feature and Option Record (stored in lid of logic module cabinet or in pedestal) to determine the options and features present in the station. In cases where the results are affected by options, alternate results for each option are provided in the tables.

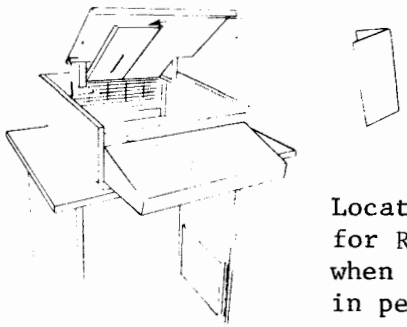

Located in pedestal for RO stations and when logic is mounted in pedestal.

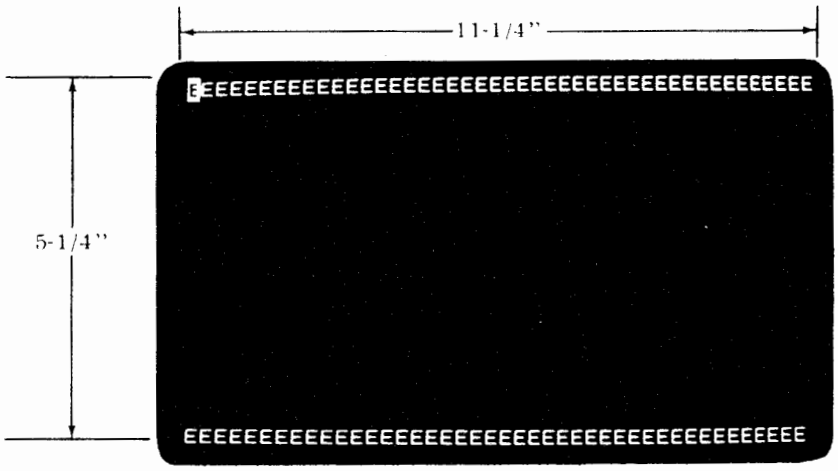

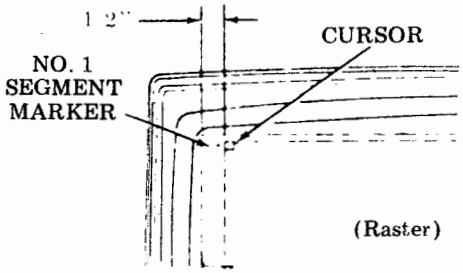

Requirements:

- Raster aligned vertically and horizontally.
- All Es sharply defined.
- Height and width of display as indicated.
- Es Uniform across full width.
- Height of Es same at top and bottom lines.

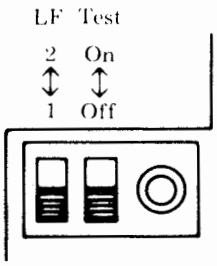

FRICTION FEED

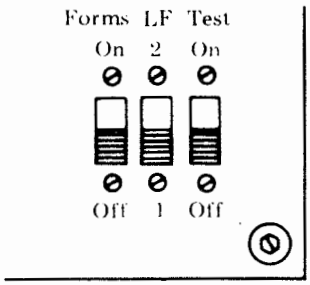

TRACTOR FEED

Figures refer to procedures in C. BRIEF OFF-LINE CHECKOUT -- KD AND KDP TERMINALS.

C. BRIEF OFF-LINE CHECKOUT -- KD AND KDP TERMINALS

This table checks the basic operation of all Model 40 KD and KDP Terminals.

STEP	PROCEDURE	RESULTS	TROUBLE ANALYSIS
1	Turn on power switches.	LOCAL lights. Fans operate.	B. TERMINAL ANALYSIS FOR 40/1 AND 40/2 (Page 4-2); 40/3 (Page 4-9)
2	Turn on power to monitor and set brightness to maximum.	Within 10 seconds raster appears with no. 1 segment marker and cursor (Page 3-2). NOTE: If random characters appear or if cursor is not at home position, depress HOME and CLEAR.	B. TERMINAL ANALYSIS FOR 40/1 AND 40/2 (Page 4-3); 40/3 (Page 4-9) 2. 40MN101 DISPLAY MONITOR (Page 4-35)
3	Adjust brightness and tube tilt to personal preference.	Cursor and segment marker clearly displayed, with raster barely visible. Glare from external light on screen should be minimal.	PART 6 -- ADJUSTMENTS
4	Lightly depress cursor right (→), down (↓), left (←), and up (↑), in that order.	Cursor moves one position in the direction indicated for each depression.	B. TERMINAL ANALYSIS FOR 40/1 AND 40/2 (Page 4-2); 40/3 (Page 4-9)
5	Repeat Step 4, but depress cursor controls fully and hold depressed until cursor stops moving.	Cursor traces outer perimeter of display, stopping at each corner, and ends at home position.	4. DISPLAY LOGIC (Page 4-50)
6	IF KEYBOARD HAS CAPS LOCK KEYTOP, DEPRESS CAPS LOCK KEY. Enter a line of Es at top and bottom of display, then HOME cursor.	Display appears (Page 3-2), with all requirements as indicated.	B. TERMINAL ANALYSIS FOR 40/1 AND 40/2 (Page 4-2); 40/3 (Page 4-9) Refer to adjustments of monitor to meet requirements.

C. BRIEF OFF-LINE CHECKOUT -- KD AND KDP TERMINALS (Cont)

STEP	PROCEDURE	RESULTS	TROUBLE ANALYSIS
STEPS 7 THROUGH 14 APPLY TO KDP TERMINALS ONLY.			
7	Preliminary requirements of printer: a. Ribbon and paper loaded. b. Switches (top right of printer, cabinet cover raised) set (Page 3-2). LF-1 Test-Off Forms (Tractor Feed Only) -- On. c. Cabinet cover closed.		
8	Momentarily depress PAPER button (red) on cover of printer cabinet.	Paper feeds out as long as button is depressed.	9. PRINTER (Page 4-70)
9	TRACTOR FEED PRINTER ONLY Depress and release FORMS ADVANCE button (black) on printer cabinet cover.	Paper feeds out until first line of next form is reached, then stops.	
10	Unlatch and raise printer cabinet cover.		
11	Raise cover interlock switch to maintenance position.		
12	Set test switch (Page 3-2) to ON, allow printer to print several lines, then turn test switch OFF.	Printer turns on and prints one of the font identification symbols such as ⁂ repeatedly until switch is turned off.	9. PRINTER (Page 4-70)
13	FRICTION FEED PRINTER Lift paper roll to simulate a paper alarm. Lower paper roll, guide paper through window, and close cabinet cover.	LOW PAPER indicator lights. LOW PAPER indicator goes out.	9. PRINTER (Page 4-70)

STEP	PROCEDURE	RESULTS	TROUBLE ANALYSIS
13 (Cont)	TRACTOR FEED PRINTER Tear off next form under pedestal top, then depress PAPER button on cabinet top until last form passes through printer. Reload forms, guide first form through window, and close cabinet cover.	 PAPER indicator lights. PAPER indicator goes out.	
14 (See Notes)	Depress PRINT LOCAL, and while cursor is moving through third or fourth line of display, depress LOCAL. PRINT ON LINE / PRINT LOCAL	LOCAL goes out. PRINT LOCAL and SEND light. Cursor moves through line of Es at top of display, returns to left, and moves through lines of spaces (blank lines). Printer prints line of Es. NOTE: Printing may occur in all 80 character positions or some Es may be carried over to next line, depending on Option 17.	B. TERMINAL ANALYSIS FOR 40/1 AND 40/2 (Page 4-2); 40/3 (Page 4-9)

NOTE 1: KD portion of KD and ROP in 40/3 arrangements does not have the PRINT LOCAL feature.

NOTE 2: The KDP printer of KDP and ROP in 40/3 arrangements responds to PRINT LOCAL; printer of ROP does not respond.

		Printer line feeds but does not print for each line of spaces. When LOCAL is depressed, SEND and PRINT LOCAL go out and LOCAL lights. Printer turns off.	9. PRINTER (Page 4-70)

C. BRIEF OFF-LINE CHECKOUT -- KD AND KDP TERMINALS (Cont)

STEP	PROCEDURE	RESULTS	TROUBLE ANALYSIS
14 (Cont)		NOTE: Printer may or may not feed out 16 lines of paper before turning off, depending on Option 18. Tractor printer may form-out depending on Option 18 and Forms switch.	
This ends BRIEF OFF-LINE CHECKOUT -- KD AND KDP TERMINALS.			

D. COMPLETE OFF-LINE CHECKOUT -- KD AND KDP TERMINALS

This table checks all features and options of Model 40 KD and KDP terminals in the local mode.

STEP	PROCEDURE	RESULTS	TROUBLE ANALYSIS
1	Power on. Monitor brightness adjusted for desired viewing level. LOCAL depressed. Depress HOME and CLEAR. Put CAPS LOCK in down position.	Cursor goes to home position and all data is cleared from screen.	B. TERMINAL ANALYSIS FOR 40/1 AND 40/2 (Page 4-2); 40/3 (Page 4-9) 4. DISPLAY LOGIC (Page 4-50)
2	Starting with top row and moving from left to right, depress each unshaded key (Page 3-7,a.). Depress RETURN and NEW LINE.	Characters displayed (Page 3-8). Cursor goes to beginning of of next line.	B. TERMINAL ANALYSIS FOR 40/1 AND 40/2 (Page 4-2); 40/3 (Page 4-9)
3	If keyboard has CAPS LOCK keytop, depress and release CAPS LOCK key so it returns to upper position, then repeat Step 2.	Characters displayed (Page 3-8). Cursor goes to beginning of next line.	
4	Hold left SHIFT key depressed. Starting with top row and moving from left to right, depress each unshaded key (Page 3-7, b.).	Characters displayed (Page 3-8). Cursor moves to beginning of next line.	

STEP	PROCEDURE	RESULTS	TROUBLE ANALYSIS
4 (Cont)	Hold right SHIFT key depressed and depress [?/] key. Depress NEW LINE key.		
5	Hold left CONTROL key depressed. Depress all unshaded keys (c. below) in sequence shown by numbers. See Note.	Characters displayed (Page 3-8). Cursor moves to beginning of next line.	

NOTE: On 40/3 terminals only: If Option 30.a. is installed, the SEND key will automatically light and the cursor will automatically go home when a valid message-ending character is entered. If this occurs, depress the LOCAL key and use cursor positioning controls to return cursor to the position after the message-ending character.

a.

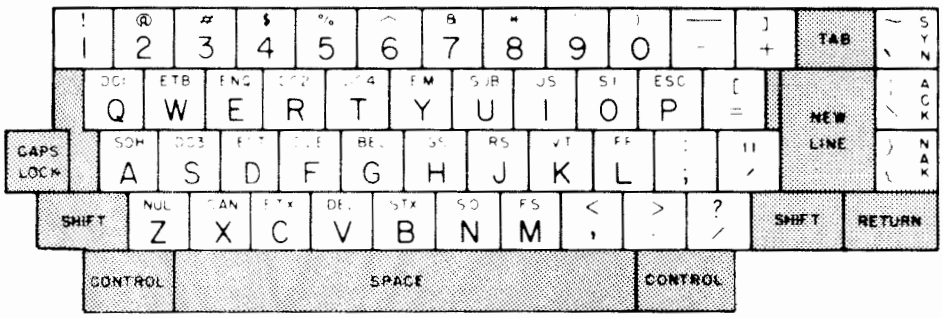

b.

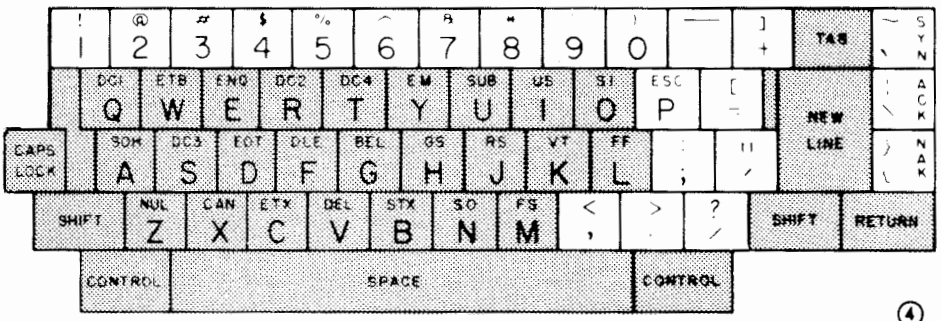

c.

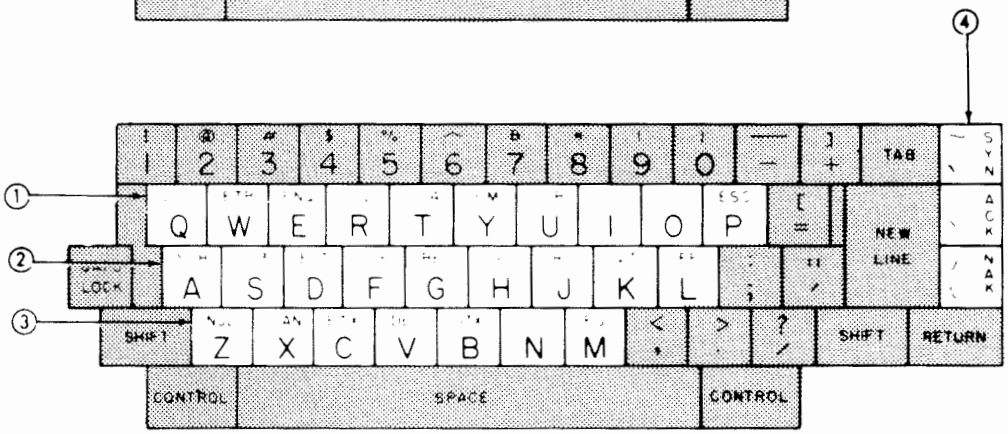

D. COMPLETE OFF-LINE CHECKOUT -- KD AND KDP TERMINALS (Cont)

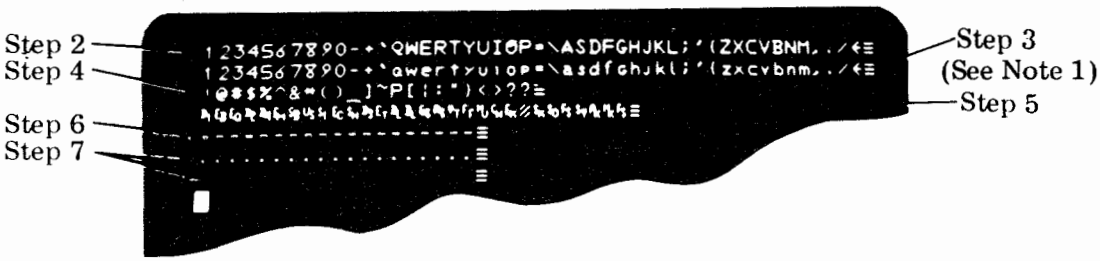

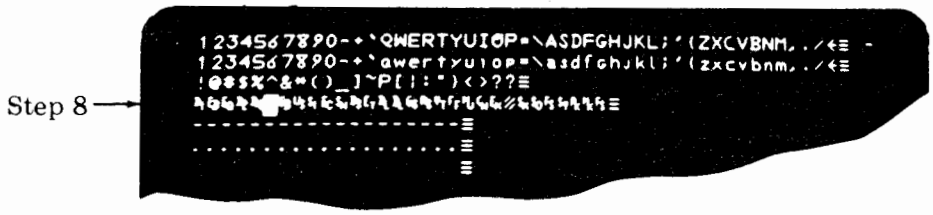

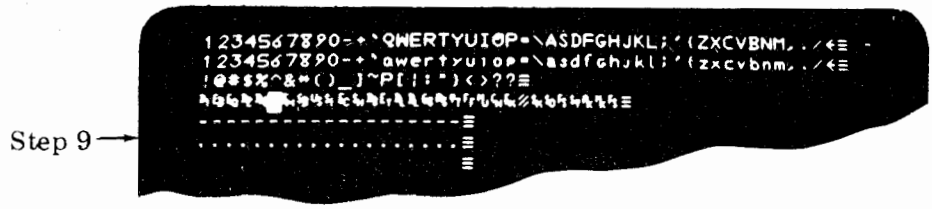

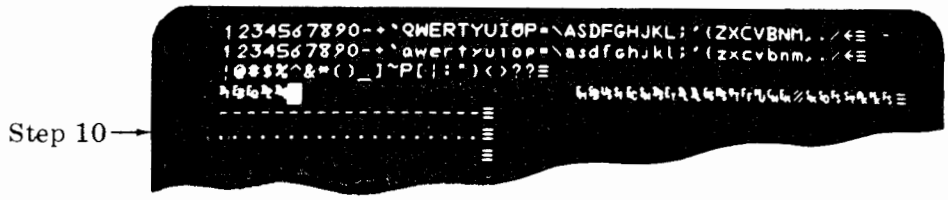

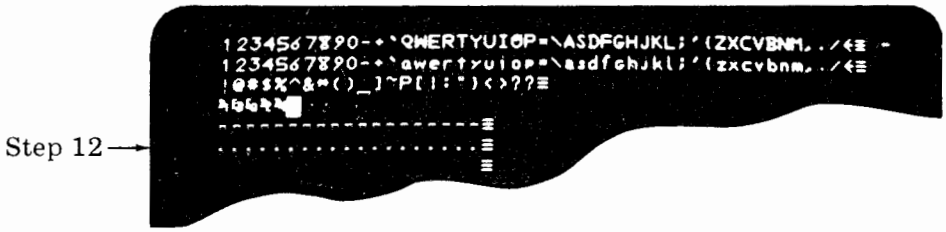

NOTE 1: Step 3 applies only if keyboard has CAPS LOCK key.

NOTE 2: Figures shown are for opcons which have monocase and up-low ASCII.

STEP	PROCEDURE	RESULTS	TROUBLE ANALYSIS
5 (Cont)	Hold right CONTROL key depressed and depress [FS M] key. Depress NEW LINE key.		
6	Fully depress and hold [-] key until about half line of characters are displayed. Depress NEW LINE.	Repeated - characters and ≡ symbol displayed (Page 3-8). Cursor moves to beginning of next line.	B. TERMINAL ANALYSIS FOR 40/1 AND 40/2 (Page 4-2); 40/3 (Page 4-9) 3. OPERATOR CONSOLE (OPCON) (Page 4-42) 5. CONTROLLER FOR 40/1 APPLICATIONS (Page 4-54)
7	Repeat Step 6 using [>] key, and then again using Spacebar.	Repeated . characters followed by ≡ symbol, and repeated spaces followed by ≡ symbol, displayed (Page 3-8). Cursor moves to beginning of next line.	
8	Depress cursor keys as necessary to position cursor over E_M character in line of control characters.		
9	Lightly depress CHAR INSRT key.	All characters to right of and including E_M move one position to right (Page 3-8).	
10	Fully depress and hold CHAR INSRT key until characters stop moving.	All characters to right of and including E_M move right continuously until ≡ symbol reaches right edge (Page 3-8).	
11	Lightly depress CHAR DLETE key.	E_M and all subsequent characters move one position to left.	
12	Fully depress and hold CHAR DLETE key until characters stop moving.	E_M and subsequent characters move left continuously and are deleted from display as they reach cursor position (Page 3-8).	

D. COMPLETE OFF-LINE CHECKOUT -- KD AND KDP TERMINALS (Cont)

STEP	PROCEDURE	RESULTS	TROUBLE ANALYSIS
13	THIS STEP APPLIES ONLY TO KDP WITH TRACTOR FEED PRINTER Hold CONTROL key depressed and depress [FF L] key three times. NOTE: Make sure forms switch of printer is on.	Three F_F characters are entered in display to the right of the D4.	
14	Depress HOME.	Cursor goes to home position.	
STEPS 15 THROUGH 27 PROVIDE PROCEDURES FOR CHECKING PRINTER OPERATION.			
15	Preliminary requirements: Ribbon and paper loaded. Switches (bottom left of printer cover) set as follows: LF-1 (Option 20.a.) TEST -- OFF FORMS -- ON (Option 39.a.) Power on.		
16	Supply repeat NEW LINE characters to printer (Friction and Tractor Feed).	Paper advances one line at a time.	9. PRINTER (Page 4-70)
17	Supply a F_F character or local form-feed command to printer (Tractor Feed).	Paper feeds out until first line of next form is reached, then stops.	9. PRINTER (Page 4-70)
18	Momentarily set Test switch to ON position then return to OFF position.	Font identification symbol (5, A, J, etc) prints repeatedly while switch is ON. Single line feed occurs.	9. PRINTER (Page 4-70)

STEP	PROCEDURE	RESULTS	TROUBLE ANALYSIS
19	Tear off next form at bottom of printer, then roll paper out until last form passes through printer (Tractor Feed). Reload forms.	Paper-out indication obtained. Paper-out indication goes off.	9. PRINTER (Page 4-70)
20	Simulate paper out by lifting paper roll out (Friction Feed). Replace paper roll.	Low paper indicator lights. Low paper indicator goes out.	9. PRINTER (Page 4-70)
21	Transmit test message to printer with correct parity, as selected by Option 19.a. or b. (if used). Include every character in font used.	Character set is printed correctly. Last character should be printed on column selected in Option 17. Lower case characters should print as selected in Options 19.d. through g., 21, and 22. Extended ASCII should print as selected in Option 23. The FF character should cause a form feed since Option 39.a. is selected (Form Feed Printers).	9. PRINTER (Page 4-70)
22	Transmit test message to printer with incorrect parity, as selected by Option 19.a. or b. (if used).	If Option 19.a. or b. is selected, printer errored character symbol A, A, etc should print continuously. If option 19.c. is selected, errored characters should print continuously.	9. PRINTER (Page 4-70)

D. COMPLETE OFF-LINE CHECKOUT -- KD AND KDP TERMINALS (Cont)

STEP	PROCEDURE	RESULTS	TROUBLE ANALYSIS
23	TRACTOR FEED ONLY: Set Forms switch to OFF. Supply a F_F character to printer. Repeat several times.	 One line is fed out each time a F_F character is received.	9. PRINTER (Page 4-70)
24	Set LF switch to position 2. Transmit test message to printer (at least 3 lines long).	 Test message is printed with double line spacing.	9. PRINTER (Page 4-70)
25	Transmit test message to printer; then remove receive message signal to printer. (This is best done with a test set, but may be done by disconnecting the SSI connector to the printer.)	Test message is printed. If Option 18.a. is selected, the printer stops printing but no feedout occurs. If Option 18.b. or c. is selected, a form feed occurs with Option 39.a. selected (Tractor Feed) and a feedout of up to 16 lines occurs with Option 39.b. selected (Tractor Feed). Friction Feed printer feeds out 16 lines with Option 18.b. selected.	9. PRINTER (Page 4-70)
26	Transmit test message to printer. Transmit ETX to printer.	Test message is printed. If Option 18.a. or b. is selected, nothing happens. If Option 18.c. is selected, a form feed occurs with Option 39.a. selected and a feedout of up to 16 lines occurs with Option 39.b. selected (Tractor Feed). Friction feed printer feeds out 16 lines with Option 18.b. selected.	9. PRINTER (Page 4-70)

STEP	PROCEDURE	RESULTS	TROUBLE ANALYSIS
27	TRACTOR FEED ONLY Tear off forms entering printer on perforations (at end of form). Transmit repeat L_F characters to printer at a slow rate (printing characters may be included to slow down rate). Allow last form to be fed completely out of printer. Reload paper in printer.	If Option 48.a. is selected, paper-out indication occurs when form is partly through printer. If Option 48.b. is selected, paper-out indication does not occur until form is completely out of printer.	9. PRINTER (Page 4-70) Remove 410729 circuit card and replace with new card.
28	KDP ONLY Depress PRINT LOCAL. When complete message on monitor has been sent to printer, depress LOCAL.	LOCAL goes out; PRINT LOCAL and SEND keys light. Cursor moves through display and printer prints according to features and options (Page 3-15). When LOCAL is depressed, SEND and PRINT LOCAL go out, printer turns off, and LOCAL lights.	B. TERMINAL ANALYSIS FOR 40/1 AND 40/2 (Page 4-2); 40/3 (Page 4-9) 9. PRINTER (Page 4-70)

D. COMPLETE OFF-LINE CHECKOUT -- KD AND KDP TERMINALS (Cont)

STEP	PROCEDURE	RESULTS	TROUBLE ANALYSIS
28 (Cont)		TRACTOR PRINTER Form-out occurs when first F_F character is sent from display. Lines of - and . characters print on next form. (Only one form-out occurs -- second and third F_F characters have no effect.) Spacing from first line of first form to line of - characters on next form equals form length selected by form belt and form selector setting.	
29	Depress HOME, then CLEAR.	Cursor goes to home position and all information is cleared from display.	B. TERMINAL ANALYSIS FOR 40/1 AND 40/2 (Page 4-2); 40/3 (Page 4-9)
30	Enter a line of 80 *s across top of display.	*s are displayed, and cursor remains at right of line.	
31	Depress LINE INSRT, then enter a line of 80 Us across top of display.	Cursor returns to home position and *s move down one line. Us are displayed above *s.	4. DISPLAY LOGIC (Page 4-50)
STEPS 32 THROUGH 35 APPLY ONLY TO TERMINALS WITH ONE SEGMENT. IF TERMINAL IS EQUIPPED WITH TWO OR THREE SEGMENT DISPLAY, GO TO STEP 36.			
32	Repeatedly depress LINE INSRT until *s move to last line of display.	Cursor returns to home position and *s and Us both move down one line each time LINE INSRT is depressed. Movement stops when *s reach bottom of display.	B. TERMINAL ANALYSIS FOR 40/1 AND 40/2 (Page 4-2); 40/3 (Page 4-9) 4. DISPLAY LOGIC (Page 4-50)

```
1234567890-+`QWERTYUIOP=\ASDFGHJKL;'{ZXCVBNM,./
1234567890-+`qwertyuiop=\asdfghjkl;'{zxcvbnm,./
!@#$%^&*()_]~P[|:"}<>??
-------------------
....................
```

Up-Low Printer w/o Foldover -- Option 21.a.

```
1234567890-+@QWERTYUIOP=\ASDFGHJKL;'[ZXCVBNM,./
1234567890-+@QWERTYUIOP=\ASDFGHJKL;'[ZXCVBNM,./
!@#$%^&*()_]^P[\:"]<>??
-------------------
....................
```

Up-Low Printer w/Foldover -- Option 21.b.
or
Monocase Printer -- Option 22.b.

```
1234567890-+[QWERTYUIOP=\ASDFGHJKL;'{ZXCVBNM,./
1234567890-+[qwertyuiop=\asdfghjkl;'{zxcvbnm,./
!@#$%^&*()_]^P[|:"}<>??
-------------------
....................
```

Monocase Printer w/o Foldover -- Option 22.a.

NOTE 1: Line 2 in all three figures present only if opcon keyboard has CAPS LOCK key.

NOTE 2: Characters shown are for basic type carrier.

NOTE 3: For tractor feed printers with form-out mechanism, lines of - and . characters appear on next form.

NOTE 4: Figures shown are for monocase and up-low ASCII.

D. COMPLETE OFF-LINE CHECKOUT -- KD AND KDP TERMINALS (Cont)

STEP	PROCEDURE	RESULTS	TROUBLE ANALYSIS
33	Depress cursor down (↓) and then cursor right (→) to move cursor to about the middle of the line of Us.		B. TERMINAL ANALYSIS FOR 40/1 AND 40/2 (Page 4-2); 40/3 (Page 4-9)
34	Depress LINE DLETE.	Cursor returns to left margin, and Us are removed. *s move up one line to replace Us.	
35	Depress LINE INSRT several times.	*s move down one line to bottom of display and stop. Cursor does not move.	
STEPS 36 THROUGH 49 APPLY ONLY TO TERMINALS EQUIPPED WITH TWO OR THREE SEGMENT DISPLAY.			
36	Depress HOME.	Cursor goes to home position.	B. TERMINAL ANALYSIS FOR 40/1 AND 40/2 (Page 4-2); 40/3 (Page 4-9)
37	Depress SEGMT ADV twice for terminals with two segments, or three times for terminals with three segments.	Segment marker changes from segment 1 marker (-) to segment 2 (=), and on terminals with three segments to segment 3 marker (≡), and back to segment 1 marker. *s and Us disappear as segment changes, and reappear at top of display when segment 1 marker reappears. Cursor does not move.	
38	Depress SCROL UP one time.	Segment 1 marker and *s disappear from top of display.	

STEP	PROCEDURE	RESULTS	TROUBLE ANALYSIS
38 (Cont)		Us move to top of display, and segment 2 marker appears at bottom left of display. Cursor does not move.	
39	Depress SCROL UP fully. 40/2 TERMINALS ONLY Operation with 410009 continuous scrolling circuit card.	Segment 2 marker (then 3 marker if terminal has three segments) moves up the display. Us disappear from top of display. Scrolling stops when segment marker of last segment reaches top line of display. Cursor does not move. 40/2 TERMINALS ONLY Scrolling will not stop when segment marker of last segment reaches top line of display, but will continue while key is fully depressed.	
40	Depress SCROL DOWN once, then fully.	Segment marker at upper left moves down one line, then moves down continuously and disappears as segment marker of previous segment appears at top left. When segment 1 marker appears at top left of display, scrolling stops. *s and Us reappear in original position at top of display when segment 1 returns to display. Cursor does not move.	B. TERMINAL ANALYSIS 40/1 AND 40/2 (Page 4-2); 40/3 (Page 4-9) 4. DISPLAY LOGIC (Page 4-50)

D. COMPLETE OFF-LINE CHECKOUT -- KD AND KDP TERMINALS (Cont)

STEP	PROCEDURE	RESULTS	TROUBLE ANALYSIS
40 (Cont)	40/2 TERMINALS ONLY Operation with 410009 continuous scrolling circuit card.	40/2 TERMINALS ONLY Scrolling will not stop when segment marker of last segment reaches top line of display, but will continue while key is fully depressed.	
41	Repeatedly depress LINE INSRT until *s move to last line of segment 1.	*s and Us both move down one line each time LINE INSRT is depressed. Cursor does not move.	B. TERMINAL ANALYSIS 40/1 AND 40/2 (Page 4-2); 40/3 (Page 4-9) 4. DISPLAY LOGIC (Page 4-50)
42	Depress cursor down (↓), and then cursor right (→) to position cursor at about the middle of the line of Us.		
43	Depress LINE DLETE.	Cursor returns to left margin and Us are removed. *s move up one line to replace Us.	
44	Depress LINE INSRT several times.	*s move down one line to bottom of display on first depression, then disappear from display on second depression. Cursor does not move.	
45	Depress SEGMT ADV.	Segment 2 marker appears at top left of display. *s appear a few lines down from top in segment 2. Cursor does not move.	

STEP	PROCEDURE	RESULTS	TROUBLE ANALYSIS
46	Depress HOME and CLEAR.	Cursor goes to home position. Segment 1 is displayed.	
47	Depress SEGMT ADV to display last segment of page.	Segment marker of last segment appears at upper left of display. *s have been cleared from segment 2. Cursor remains in home position.	B. TERMINAL ANALYSIS FOR 40/1 AND 40/2 (Page 4-2); 40/3 (Page 4-9)
48	Depress cursor down (↓) to position cursor at about next to last line of display, then enter a few Us in this line.		
49	Depress LINE INSRT several times.	Cursor returns to left margin and Us move to bottom of display, then stop.	
IF TERMINAL IS EQUIPPED WITH FULL EDIT FEATURE, GO TO STEP 50. IF NOT, THIS COMPLETES OFF-LINE CHECKOUT.			
50	Depress HOME, then CLEAR.	Cursor goes to home position and display is cleared.	B. TERMINAL ANALYSIS FOR 40/1 AND 40/2 (Page 4-2); 40/3 (Page 4-9)
51	Alternately depress TAB SET and Spacebar until cursor reaches end of line.	Column of tab marks is displayed in every character position of page. Alarm sounds at 73rd and 80th character positions. (On terminals with more than one segment, depress SEGMT ADV as necessary to view tab columns on other segment(s), then return to segment 1.)	5. CONTROLLER FOR 40/2 APPLICATIONS (Page 4-60) 4. DISPLAY LOGIC (Page 4-50) 3. OPERATOR CONSOLE (OPCON) (Page 4-42)

D. COMPLETE OFF-LINE CHECKOUT -- KD AND KDP TERMINALS (Cont)

STEP	PROCEDURE	RESULTS	TROUBLE ANALYSIS
52	Home cursor and depress TAB CLEAR.	All tab marks (on all segments) are cleared.	B. TERMINAL ANALYSIS FOR 40/1 AND 40/2 (Page 4-2); 40/3 (Page 4-9)
53	Depress HIGH LIGHT.	HIGH LIGHT key lights.	
54	Enter a full line of *s at top of display.	*s continuously flash between half and full intensity. Alarm sounds at 73rd and 80th character positions. Cursor remains at right end of line.	
55	Depress HIGH LIGHT again.	HIGH LIGHT indicator goes out.	
56	Depress LINE INSRT.	Cursor moves to left margin, and highlighted *s move down one line.	B. TERMINAL ANALYSIS FOR 40/1 AND 40/2 (Page 4-2); 40/3 (Page 4-9)
IF OPTION 12.a. IS ENABLED ON 410675 CARD (SEE STATION FEATURES AND OPTION RECORD). TEMPORARILY CHANGE TO OPTION 12.b. UNTIL CHECKOUT IS COMPLETE.			
57	Depress FORM ENTER.	FORM ENTER indicator lights.	5. CONTROLLER FOR 40/1 APPLICATIONS (Page 4-54) B. TERMINAL ANALYSIS FOR 40/1 AND 40/2 (Page 4-2); 40/3 (Page 4-9) 4. DISPLAY LOGIC (Page 4-50)
58	Enter a full line of Us at top of display.	Us are displayed at half intensity (protected). Alarm sounds at 73rd and 80th character positions. Cursor remains at right end of line.	
59	Depress LINE INSRT.	Cursor moves to left margin and lines of *s and Us both move down one position. Cursor remains in home position.	
60	Depress CLEAR.	Screen is cleared.	

STEP	PROCEDURE	RESULTS	TROUBLE ANALYSIS
61	Depress FORM ENTER.	FORM ENTER indicator goes out.	
62	Enter message (Page 3-22) in lines 1 through 9 of display. (Procedure is indicated on Page 3-22.)	Message appears (Page 3-22). (To observe protected spaces, increase monitor brightness and note that all protected data has darker background than unprotected data.)	
63	Depress CHAR INSRT fully and hold until movement stops.	Word QUICK in line 1 moves to tab column and stops. No other characters affected.	B. TERMINAL ANALYSIS FOR 40/1 AND 40/2 (Page 4-2); 40/3 (Page 4-9)
64	Depress CHAR DLETE twice.	Work QUICK in line 1 moves two positions left. No other characters affected.	
65	Depress TAB.	Cursor moves to tab column. Tab symbol (▶) appears at original position of cursor. All characters passed over by cursor are erased from display.	
66	Depress CHAR INSRT fully and hold until movement stops.	Word UNPROTECTED moves three positions to right, stopping when it reaches word PROTECTED. No other characters affected.	

D. COMPLETE OFF-LINE CHECKOUT -- KD AND KDP TERMINALS (Cont)

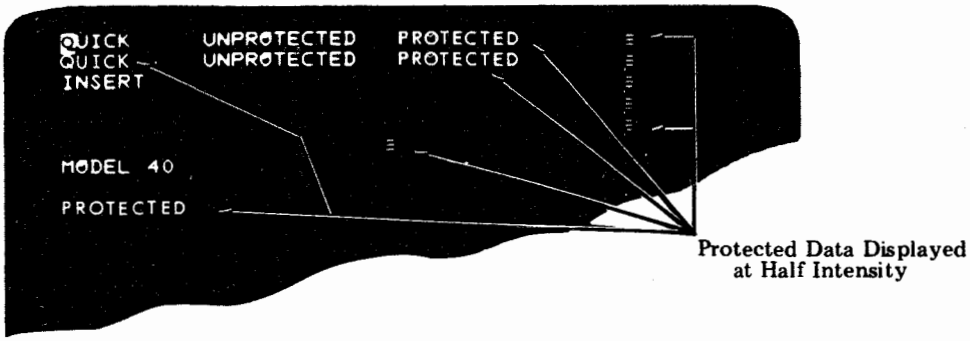

NOTE: Depress each key once unless number of depressions is indicated in parentheses.

LINE 1

Type QUICK
Depress Space (5)
Depress TAB SET
Type UNPROTECTED
Depress Space (3)
Depress FORM ENTER
Type PROTECTED
Depress FORM ENTER
Depress Space (8)
Depress FORM ENTER
Depress NEW LINE

LINE 2

Type QUICK
Depress FORM ENTER
Depress Space (5)
Type UNPROTECTED
Depress Space (3)
Depress FORM ENTER
Type PROTECTED
Depress FORM ENTER
Depress Space (8)
Depress FORM ENTER
Depress NEW LINE
Depress FORM ENTER

LINE 3

Type INSERT
Depress Space until cursor is under NEW LINE symbol.
Depress FORM ENTER
Depress NEW LINE

LINE 4 AND 5

Depress Cursor Right (→) until cursor is under NEW LINE symbol.
Depress NEW LINE

(Repeat for Line 5)

LINE 6

Depress Cursor Right (→) until cursor is at about 23rd character position.
Depress NEW LINE.
Depress FORM ENTER.

LINE 7

Type MODEL
Depress Space
Type 40

LINE 8

Depress CURSR RTRN
Depress Cursor down (↓) twice

LINE 9

Depress FORM ENTER
Type PROTECTED
Depress FORM ENTER
Depress HOME

STEP	PROCEDURE	RESULTS	TROUBLE ANALYSIS
67	Depress CHAR DLETE fully and hold until movement stops.	Word UNPROTECTED is moved left and completely erased. No other characters affected.	
68	Depress TAB.	Cursor moves to first character position after word PROTECTED. Tab symbol (▶) appears at original position of cursor.	
69	Depress Spacebar once, then depress it fully.	Alarm sounds once when Spacebar is depressed first time. Cursor moves to character position preceding protected New Line symbol. Alarm sounds continuously, and cursor does not advance beyond this position.	
70	Depress TAB.	Cursor moves to end of protected word QUICK in line 2.	
71	Depress CURSOR TAB three times.	Cursor moves to tab mark on first depression. Cursor moves to space following word PROTECTED on second depression. Cursor moves to beginning of word INSERT in line 3 on third depression. No characters altered in any way.	B. TERMINAL ANALYSIS FOR 40/1 AND 40/2 (Page 4-2); 40/3 (Page 4-9) 3. OPERATOR CONSOLE (OPCON) (Page 4-42) 4. DISPLAY LOGIC (Page 4-50)

D. COMPLETE OFF-LINE CHECKOUT -- KD AND KDP TERMINALS (Cont)

STEP	PROCEDURE	RESULTS	TROUBLE ANALYSIS
72	Depress LINE INSRT three times.	Word INSERT moves down two lines and stops. Rest of display does not change.	
73	Position cursor over M in word MODEL, then depress LINE INSRT twice.	Words MODEL 40 move down one position and stop.	
74	Move cursor over P at beginning of line 9, and type some miscellaneous characters.	Alarm sounds each time a key is depressed. (No characters can overwrite a protected character.)	
75	Depress HOME, CLEAR, then TAB CLEAR.	Cursor goes to home position. All unprotected characters and tab columns are cleared. Protected characters remain on display.	
76	Depress FORM ENTER.	FORM ENTER indicator lights.	
77	Depress CLEAR.	All characters are cleared from display.	
78	Depress FORM ENTER.	FORM ENTER indicator goes out.	
79	If Option 12.a. was originally present on 410675 card, restore this option (unless further checkout is to be performed).	With Option 12.a. selected, FORM ENTER indicator will no longer light when FORM ENTER is depressed in local mode.	
THIS COMPLETES OFF-LINE CHECK OF KD OR KDP.			

E. OFF-LINE CHECKOUT -- ROP TERMINALS

This table checks the basic operation of Model 40 ROP terminals.

STEP	PROCEDURE	RESULTS	TROUBLE ANALYSIS
1	Preliminary requirements: a. Ribbon and paper loaded. b. Switches (top right of printer cabinet, cover raised) set as follows: LF-1 Test-Off Forms (Tractor Feed Only)-On. c. Cabinet cover and pedestal door closed.		
2	Turn on power.	IN SERVICE indicator lights. Fans move air in pedestal. In tractor feed printer, fan in printer cabinet cover also turns on.	B. TERMINAL ANALYSIS FOR 40/1 AND 40/2 (Page 4-2); 40/3 (Page 4-9) 8. 40C103 ROP CONTROLLER (Page 4-67) 3. OPERATOR CONSOLE (OPCON) (Page 4-42) 9. PRINTER (Page 4-70)
3	Momentarily depress PAPER button (red) on cover of printer cabinet.	Paper feeds out as long as button is depressed.	
4	TRACTOR FEED PRINTER ONLY Depress and release FORMS ADVANCE button (black) on printer cabinet cover.	Paper feeds out until first line of next form is reached, then stops.	
5	Unlatch and raise printer cabinet cover.	IN SERVICE indicator goes out.	

E. OFF-LINE CHECKOUT -- ROP TERMINALS (Cont)

STEP	PROCEDURE	RESULTS	TROUBLE ANALYSIS
6	Raise cover interlock to maintenance position.	IN SERVICE indicator lights.	B. TERMINAL ANALYSIS FOR 40/1 AND 40/2 (Page 4-2); 40/3 (Page 4-9) 8. 40C103 ROP CONTROLLER (Page 4-67) 3. OPERATOR CONSOLE (OPCON) (Page 4-42) 9. PRINTER (Page 4-70)
7	Momentarily set Test switch to ON position then return to OFF position.	Font identification symbol (⁂ or ⁂) prints repeatedly while switch is on.	
8	FRICTION FEED PRINTER Lift paper roll to simulate a paper alarm. Lower paper roll. Guide paper through window and close cabinet cover. TRACTOR FEED PRINTER Tear off next form under pedestal top, then depress PAPER button on cabinet top until last form passes through printer. Reload forms and close cabinet cover.	PAPER indicator lights; IN SERVICE indicator goes out. LOW PAPER indicator goes out; IN SERVICE indicator lights. PAPER indicator lights; IN SERVICE indicator goes out. PAPER indicator goes out; IN SERVICE indicator lights.	
9	Depress TRANS START key (if present) on opcon, then after a few seconds depress again. NOTE: If keytop is not present on opcon, remove blocking keytop to left of IN SERVICE key. Depress switch once to turn on and second time to turn off.	TRANS START indicator lights and character set is printed repeatedly (Page 3-28). Indicator goes out and printing stops when depressed second time.	

STEP	PROCEDURE	RESULTS	TROUBLE ANALYSIS
10	Raise printer cabinet cover and set LF switch to position 2. Close cover and depress TRANS START key. While printer is printing, raise cover.	Repeated character set prints with double line spacing. When cover is raised, printer stops and IN SERVICE indicator goes out.	
11	Restore setting of LF switch (or leave in position 2 if double line spacing is desired). Depress (release) TRANS START key. If blocking keytop was removed in Step 9, restore keytop to opcon. Close cabinet cover.	 IN SERVICE indicator lights.	
THIS COMPLETES OFF-LINE CHECKOUT -- ROP TERMINALS.			

E. OFF-LINE CHECKOUT -- ROP TERMINALS (Cont)

```
!"#$%&'()*+,-./0123456789:;<=>?@ABCDEFGHIJKLMNOPQRSTUVWXYZ[\]^_
!"#$%&'()*+,-./0123456789:;<=>?@ABCDEFGHIJKLMNOPQRSTUVWXYZ[\]^_
!"#$%&'()*+,-./0123456789:;<=>?@ABCDEFGHIJKLMNOPQRSTUVWXYZ[\]^_
!"#$%&'()*+,-./0123456789:;<=>?@ABCDEFGHIJKLMNOPQRSTUVWXYZ[\]^_
!"#$%&'()*+,-./0123456789:;<=>?@ABCDEFGHIJKLMNOPQRSTUVWXYZ[\]^_
!"#$%&'()*+,-./0123456789:;<=>?@ABCDEFGHIJKLMNOPQRSTUVWXYZ[\]^
```

Option 19. a. Enabled

```
/ 12 4  7 ; =  @  C  F  I J  L  (  F  P  X  [ ] ^  #
=> @  C  EF  I  (  K  X  [ ] ^  #  %&  )*  ,  / 12
L  O  QR  T  X  [ ] ^  #  %&  )*  ,  / 12  6  ; => 8
```

Line feed detected as errored character; printing continues to end of line.

Option 19. b. Enabled

```
!"#$%&'()*+,-./0123456789:;<=>?@ABCDEFGHIJKLMNOPQRSTUVWXYZ[\]^_
!"#$%&'()*+,-./0123456789:;<=>?@ABCDEFGHIJKLMNOPQRSTUVWXYZ[\]^_
!"#$%&'()*+,-./0123456789:;<=>?@ABCDEFGHIJKLMNOPQRSTUVWXYZ[\]^_
!"#$%&'()*+,-./0123456789:;<=>?@ABCDEFGHIJKLMNOPQRSTUVWXYZ[\]^_
```

Option 19. c. Enabled

```
!"#$%&'()*+,-./0123456789
                          :;<=>?@ABCDEFGHIJKLMNO
                                                PQRSTUVWXYZ[\]^_
!"#$%&'()*+,-./012345678
                         9:;<=>?@ABCDEFGHIJKLMNO
                                                PQRSTUVWXYZ[\]^_
!"#$%&'()*+,-./0123456789:;<=>?@ABCDEFGHIJKLMN
                                               OPQRSTUVWXYZ[\]^_
```

The TRANS START character set will print as above if Option 19.c. is enabled and the data stacking Option 38. is enabled in the 40C103/AE RO Controller (410580 circuit card). The locations of the line feeds may vary from the example shown.

NOTE: Printed characters shown for basic monocase type character (identification symbol). For other type carriers, substitute characters as necessary.

PART 4 — TROUBLESHOOTING

INDEX

		PAGE
A.	GENERAL	1
B.	TERMINAL ANALYSIS FOR 40/1 AND 40/2	2
C.	TERMINAL ANALYSIS FOR 40/3	9
D.	COMPONENT ANALYSIS	
	1. 40PSU101 POWER SUPPLY	31
	2. 40MN101 DISPLAY MONITOR	35
	3. OPERATOR CONSOLE (OPCON)	42
	4. DISPLAY LOGIC	50
	5. CONTROLLER FOR 40/1 APPLICATIONS	54
	6. CONTROLLER FOR 40/2 APPLICATIONS	60
	7. KD OR KDP CONTROLLER FOR 40/3 APPLICATIONS	65
	8. 40C103 ROP CONTROLLER	67
	9. PRINTER	70
E.	REPLACEMENT PARTS AND UNITS	
	1. 40PSU101 POWER SUPPLY	107
	2. 40MN101 DISPLAY MONITOR	107
	3. OPERATOR CONSOLE	108
	4. DISPLAY LOGIC	109
	5. 40C103 RO CONTROLLER	109
	6. CONTROLLER	109
	7. PRINTER	110
	8. CABINET	113

A. GENERAL

The troubleshooting information is arranged as follows:

B. TERMINAL ANALYSIS FOR 40/1 AND 40/2 -- Contains troubleshooting for the terminal as a whole. The procedures isolate the trouble to a component in 40/1 and 40/2 Stations.

C. TERMINAL ANALYSIS FOR 40/3 -- Isolates a trouble to a component in 40/3 Stations.

D. COMPONENT ANALYSIS -- Isolates a trouble within a component, such as the printer, monitor, etc.

To use the troubleshooting information, always start with Analysis Question 1 of B. TERMINAL ANALYSIS FOR 40/1 AND 40/2 or C. TERMINAL ANALYSIS FOR 40/3, and follow the indicated procedure to the directive which specifies proceeding to D. COMPONENT ANALYSIS. Then follow the specific component analysis indicated (ie, power supply, display monitor, opcon, etc) starting with Question Analysis 1 to isolate and correct the trouble by replacing the indicated defective component.

If replacement of the part or subcomponent indicated in D. COMPONENT ANALYSIS does not correct the trouble, replace the next higher order of component (ie, fuse, power distribution assembly, display monitor, or entire terminal).

When installing a replacement component, make certain that all options (if present) in this component are implemented for proper set operation.

Where more than one component is specified for replacement, they should be substituted one at a time in the order specified. The original component should be replaced if the trouble is not corrected before making the next indicated substitution.

A. GENERAL (Cont)

Once the trouble has been corrected, the terminal should be checked out to be sure that it is performing properly. Refer to PART 3 -- OPERATIONAL CHECKOUT.

The following caution procedures must be observed when troubleshooting the Model 40:

CAUTION 1: TURN OFF ALL POWER OR SIGNAL SOURCES BEFORE REMOVING OR REPLACING ANY COMPONENT.

CAUTION 2: PERSONNEL WORKING WITH THE MODEL 40 MUST WEAR A STATIC PROTECTION GROUND STRAP WHEN HANDLING CIRCUIT CARDS WITH MOS DEVICES. THE STRAP MUST BE WORN SO AS TO MAKE FIRM CONTACT WITH THE SKIN AT ALL TIMES.

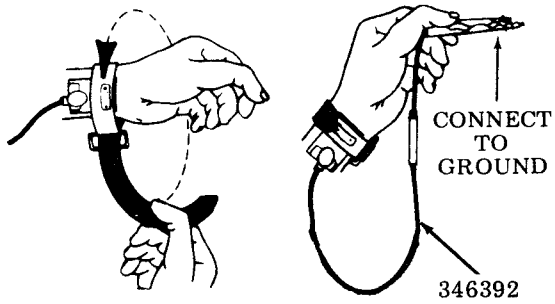

NOTE: Service personnel are never to be connected directly to ground but rather through a high resistance discharge path of a minimum of one megohm where 115 V ac is present.

To locate components, circuit cards, connectors, test switches, indicator lamps and other elements indicated in the troubleshooting information, refer to PART 7 -- COMPONENT ACCESS. Table of Contents and Pages 107 through 113 give part location.

For wire color codes, cable, connector, and other wiring indicated for continuity checks etc in troubleshooting, refer to PART 5 -- WIRING DIAGRAMS.

B. TERMINAL ANALYSIS FOR 40/1 AND 40/2

NOTE 1: Always start with ANALYSIS QUESTION 1.

NOTE 2: Answer analysis questions, and follow appropriate response directive.

ANALYSIS QUESTION	"YES" RESPONSE DIRECTIVE	"NO" RESPONSE DIRECTIVE
1. Is the set a KD or KDP? (KD: Keyboard Display) (KDP: KD + Printer)	Go to 2.	Go to 19.

ANALYSIS QUESTION	"YES" RESPONSE DIRECTIVE	"NO" RESPONSE DIRECTIVE
2. Do the fans turn when power is ON?	Go to 3.	Check ac to fan. Ref: PART 5 -- WIRING DIAGRAMS. PART 7 -- COMPONENT ACCESS Fan cable connected. Power switch(es) ON. AC present at fan assembly connector.
3. Does the LOCAL lamp on the opcon turn ON when power is turned ON?	Go to 5.	Go to 4.
4. Are all three LED indicators in the power supply ON?	Go to Page 4-42, 3. OPERATOR CONSOLE (OPCON). Go to Page 4-54, 5. CONTROLLER FOR 40/1 APPLICATIONS.	Go to Page 4-31, 1. 40PSU101 POWER SUPPLY.
5. Is the red drive lamp I5 (in display monitor) ON?	Go to 6.	Go to Page 4-50, 4. DISPLAY LOGIC. Go to Page 4-35, 2. 40MN101 DISPLAY MONITOR.
6. Is the red pilot lamp I7 (next to fuse on power distribution assembly in display monitor) ON?	Go to 7.	Go to Page 4-35, 2. 40MN101 DISPLAY MONITOR.
7. With the monitor OFF/ON control switch ON (CCW) and the operator brightness control to full intensity (CCW), is the raster visible?	Go to 9.	Go to 8.

B. TERMINAL ANALYSIS FOR 40/1 AND 40/2 (Cont)

ANALYSIS QUESTION	"YES" RESPONSE DIRECTIVE	"NO" RESPONSE DIRECTIVE
8. Is the I6 high voltage lamp in the display monitor ON?	Check MASTER BRIGHTNESS adjustment (Page 6-4). Go to 9.	Go to Page 4-35, 2. 40MN101 DISPLAY MONITOR.
9. Is the cursor displayed on the monitor?	Go to 11.	Go to 10.
10. Turn operator brightness to full intensity (CCW). Depress test switch no. 1 (TS1) in display logic. Does a flashing vertical black bar pattern appear in the raster with no white pattern? 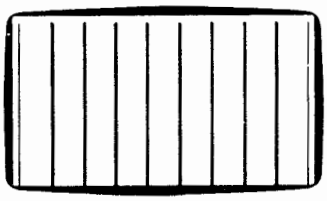	Go to Page 4-35, 2. 40MN101 DISPLAY MONITOR. Go to Page 4-50, 4. DISPLAY LOGIC	Go to Page 4-50, 4. DISPLAY LOGIC.
11. In the local mode, can all data (including editing functions) be input from the opcon to the display monitor on all segments?	Go to 12.	Go to Page 4-42, 3. OPERATOR CONSOLE (OPCON). Go to Page 4-50, 4. DISPLAY LOGIC. Go to Page 4-54, 5. CONTROLLER FOR 40/1 APPLICATIONS; Page 4-60, 6. CONTROLLER FOR 40/2 APPLICATIONS.
12. Are the characters displayed on the display monitor distorted?	Go to Page 4-35, 2. 40MN101 DISPLAY MONITOR. Go to Page 4-50, 4. DISPLAY LOGIC.	Go to 13.

ANALYSIS QUESTION	"YES" RESPONSE DIRECTIVE	"NO" RESPONSE DIRECTIVE
13. Do characters displayed on the display monitor correspond to those generated from the opcon?	Go to 15.	Go to Page 4-50, 4. DISPLAY LOGIC. Go to Page 4-54, 5. CONTROLLER FOR 40/1 APPLICATIONS; Page 4-60, 6. CONTROLLER FOR 40/2 APPLICATIONS. Go to Page 4-42, 3. OPERATOR CONSOLE (OPCON).
14. Does the terminal have a printer?	Go to 15.	Go to 17.
15. Does the printer respond properly when the PRINT LOCAL key on the opcon is depressed?	Go to 17.	Go to 16.
16. Does the PRINT LOCAL key on the opcon light?	Go to 17.	Go to Local Loop-Back Tests (Page 4-48). If PRINT LOCAL lamp fails test, replace opcon. If PRINT LOCAL lamp passes test, remove opcon from loop-back mode and go to 17.
17. Does the type carrier symbol (A/A or A/H) print in every column when the printer TEST switch TS9 is ON and the printer cover is closed or the interlock switch is in the maintenance up position?	Go to 18.	Go to Page 4-70, 9. PRINTER.
18. Does the station perform on-line tests properly?	Place in service.	Go to Page 4-54, 5. CONTROLLER FOR 40/1 APPLICATIONS; Page 4-60, 6. CONTROLLER FOR 40/2 APPLICATIONS.
19. Does the IN SERVICE lamp on the opcon in the ROP turn ON when power is turned ON?	Go to 20.	Go to 24.

B. TERMINAL ANALYSIS FOR 40/1 AND 40/2 (Cont)

ANALYSIS QUESTION	"YES" RESPONSE DIRECTIVE	"NO" RESPONSE DIRECTIVE
20. In an off-line mode, does the TRANS START lamp turn ON when the key is depressed? (The key lights when depressed and stays ON until depressed again to stop the test.)	Go to 21.	Go to Page 4-42, 3. OPERATOR CONSOLE (OPCON). Go to Page 4-67, 8. 40C103 ROP CONTROLLER.
21. In an off-line mode, is the test pattern printed properly with no errors when the TRANS START key is depressed?	Go to 26.	Go to 22.
22. Does the printer turn ON or run at all when the TRANS START key is depressed.	Go to Page 4-70, 9. PRINTER. Go to Page 4-67, 8. 40C103 ROP CONTROLLER.	Go to 23.
23. Does paper advance when the red PAPER key is depressed?	Go to Page 4-67, 8. 40C103 ROP CONTROLLER.	Check continuity: 80-Column Printers -- Terminals A to B, C to D on J3 connector, 132-Column Printers -- Terminals 37 to 38, 39 to 40 on P109 connector; on both 80- and 132-column, check continuity between terminals 1 to 2 and 3 to 6 on printer connector at rear of cabinet. Go to Page 4-31, 1. 40PSU101 POWER SUPPLY. If printer is tractor feed, check continuity of paper advance contact (connector P114, terminals 3 to 4) when switch is depressed. Go to Page 4-70, 9. PRINTER. Go to Page 4-67, 8. 40C103 ROP CONTROLLER.

ANALYSIS QUESTION	"YES" RESPONSE DIRECTIVE	"NO" RESPONSE DIRECTIVE
24. Does paper advance when the red PAPER key is depressed?	Go to 25.	Check interlock switch PS5 for continuity when switch activator is down and in maintenance up positions. Friction Feed: connector J106, terminals 1 to 2. Tractor Feed: connector P114, terminals 6 to 7 and and 3 to 5. Check continuity: 80-Column Printers -- Terminals A to B, C to D, on J3 connector, 132-Column Printers -- Terminals 37 to 38, 39 to 40 on P109 connector; on both 80- and 132-column printers, check continuity between terminals 1 to 2 and 3 to 6 on printer connector at rear of cabinet. If printer is tractor feed, check continuity of paper advance contact (connector P114, terminals 3 to 4) when switch is depressed. Go to Page 4-70, 9. PRINTER. Go to Page 4-67, 8. 40C103 ROP CONTROLLER.
25. Does the type carrier symbol (⁂ or ⁂) print in every column when the printer TEST switch TS9 is ON and the printer cover is closed, or the interlock switch PS5 is in the maintenance up position?	Check SSI cable and feed through for continuity at terminals A to B and C to D on connector J3 to printer circuit card, and terminals 1 to 2 and 3 to 6 on printer connector at rear of cabinet. Go to Page 4-42, 3. OPERATOR CONSOLE (OPCON).	Go to Page 4-70, 9. PRINTER.

B. TERMINAL ANALYSIS FOR 40/1 AND 40/2 (Cont)

ANALYSIS QUESTION	"YES" RESPONSE DIRECTIVE	"NO" RESPONSE DIRECTIVE
26. Does paper advance when the red PAPER key is depressed?	Go to 27.	If printer is tractor feed, check continuity of paper advance contact (connector P114, terminals 3 to 4) when switch is depressed. Go to Page 4-70, 9. PRINTER.
27. Does the printer have tractor feed paper drive?	Go to 28.	Go to 29.
28. When the black FORM ADVANCE key is depressed, does the paper advance one form (printer FORM switch ON) or advance continuously (printer FORM switch OFF)?	Go to 29.	Check FORM ADVANCE switch for continuity when depressed (connector P114, terminals 3 to 4 and 3 to 5). Go to Page 4-70, 9. PRINTER. Check Form-Out Contact Gap (Page 6-19).
29. Does the type carrier symbol (⁂ or ⁂) print in every column when the printer TEST switch TS9 is ON and the printer cover is closed, or the interlock switch PS5 is in the maintenance up position?	Go to 30.	Go to Page 4-70, 9. PRINTER.
30. Does the station perform on-line tests properly?	Place in service.	Go to Page 4-70, 9. PRINTER. Go to Page 4-67, 8. 40C103 ROP CONTROLLER.

C. TERMINAL ANALYSIS FOR 40/3

NOTE 1: The test set referred to in the analysis is a Model 40 Station with 9140YH Controller.

NOTE 2: If the 9140YH Station Controller circuit cards indicated in the analysis do not solve the problem, replace controller wired frame (328812).

ANALYSIS QUESTION	"YES" RESPONSE DIRECTIVE	"NO" RESPONSE DIRECTIVE
1. Is the test set connected to other stations on the line while troubleshooting this station?	Go to 2. NOTE: If an answer-back problem or misdirected message problem is reported, it might be caused by another station on the line. This procedure will show bad answer-back or misdirected message (if that is the problem), but isolation to faulty station may require disconnecting other stations from the line to the test set.	Go to 2. NOTE: If an answer-back problem or misdirected message problem is reported, it might be caused by another station on the line. This procedure will not show bad answer-back or misdirected message (if that is the problem). If reported symptom is being caused by the station under analysis, however, following this trouble analysis will isolate problem.
2. Station with ROP: IN SERVICE key must be lit and TRANS START key must not be lit for this step. Station with KD or KDP: REC key must be lit for this step. Station with KDP: PRINT ON LINE key must be lit for this step. All stations: If any of above conditions cannot be met, trouble is in Model 40.	Test set copies some character or characters. 9140 Station Controller Option 17.a. or 17.b.: Go to 3. 9140 Station Controller Option 17.c.: Replace 322013 circuit card (C2).	9140 Station Controller Option 17.a. or 17.b.: Go to 5. 9140 Station Controller Option 17.c.: Go to 4.

C. TERMINAL ANALYSIS FOR 40/3 (Cont)

ANALYSIS QUESTION	"YES" RESPONSE DIRECTIVE	"NO" RESPONSE DIRECTIVE
2. (Cont) From test set, send EOT and CDC1. Does test set copy AB? NOTE: If 9140 Station Controller Option 17.b. is installed, then CDC1 is CDC1 character 1, CDC1 character 2, Delete.		
3. Does station modem carrier remain on after AB is sent?	Replace 322083 circuit card (G3). Replace 322451 circuit card (E2). Replace 322014 circuit card (D1). Replace 322013 circuit card (C2).	Go to 14.
4. From test set, send STX, text, and EOT. Does station copy text? (Text can be a short message.)	From test set, send CDC1. Test set will not copy an AB. Go to 23.	Go to 17.
5. From test set, send STX, text, and EOT. Does station copy text? (Text can be a short message.)	Go to 6.	Go to 9.
6. From test set, send TSC of the station. Does test set copy an AB? NOTE: If 9140 Station Controller Option 2.b. is installed, then TSC is TSC character 1, TSC character 2, Delete.	Replace 322013 circuit card (C2). Replace 322442 circuit card (C2-2).	KD, KDP: Go to 7. ROP: Go to 8.

ANALYSIS QUESTION	"YES" RESPONSE DIRECTIVE	"NO" RESPONSE DIRECTIVE
7. Bypass 9140 Station Controller by following method: Disconnect "9140 Station Controller to data set" cable from modem. Disconnect "Model 40 to 9140 Station Controller" cable from 9140 Station Controller and connect it to modem. In local mode, prepare a short message ending in EOT. Depress HOME and SEND keys. Does test set copy message without error?	Trouble is in 9140 Station Controller. Reconnect 9140 Station Controller and replace 322083 circuit card (G3). Replace 322451 circuit card (E2). Replace 322014 circuit card (D1). Replace 322013 circuit card (C2). Replace 322442 circuit card (C2-2).	Replace modem. Reconnect 9140 Station Controller.
8. Just after TSC is sent from test set, make this measurement. Measure voltage between circuit card connector E, pin A19 and connector E, pin A4. Is the voltage at E-A19 ever approximately +9 V dc (+3 V dc to +25 V dc is acceptable)? In this step a momentary positive deflection of the meter can be considered to be +9 V dc.	Replace modem. Replace 322083 circuit card (G3). Replace 322451 circuit card (E2). Replace 322014 circuit card (D1). Replace 322013 circuit card (C2). Replace 322442 circuit card (C2-2).	Replace 322083 circuit card (G3). Replace 322451 circuit card (E2). Replace 322014 circuit card (D1). Replace 322013 circuit card (C2). Replace 322442 circuit card (C2-2).
9. From test set, send TSC of station. Does test set copy A/B1, A/B2?	Go to 10.	Go to 26.

C. TERMINAL ANALYSIS FOR 40/3 (Cont)

ANALYSIS QUESTION	"YES" RESPONSE DIRECTIVE	"NO" RESPONSE DIRECTIVE
9. (Cont) (A/B1, A/B2 is answer-back character 1 followed by answer-back character 2.)		
10. From test set, send CDC1. Station still does not AB. From test set, send STX, text, and EOT. Does station copy text?	Replace 322013 circuit card (C2). Replace 322442 circuit card (C2-2).	Go to 11.
11. Measure voltage between circuit card connector A, pin 20 and connector A, pin 4 just after CDC1 is sent from test set. Is A20 approximately +5 V dc?	Go to 12.	Replace 322010 circuit card (A).
12. Does voltage on circuit card connector A, pin 20 (see Question 11) stay at approximately +5 V dc? (Watch only for a minute.)	Replace 322013 circuit card (C2).	Go to 13.
13. Measure voltage between circuit card connector A, pin 10 and connector A, pin 4 just after CDC1 is sent from test set. Is voltage on A10 ever approximately +5 V dc?	Replace 322017 circuit card (F1). Replace 322013 circuit card (C2).	Replace 322013 circuit card (C2). Replace 322010 circuit card (A).
14. Was delay in receiving AB approximately 2 seconds in Question 2?	9140 Station Controller Option 21.a. is installed. Go to 15.	Delay is not noticeable. 9140 Station Controller Option 21.b. is installed. Go to 16.

ANALYSIS QUESTION	"YES" RESPONSE DIRECTIVE	"NO" RESPONSE DIRECTIVE
15. Does customer want 9140 Station Controller Option 21.a.?	Go to 19.	Install strap 68. If AB delay after EOT and CDC1 sent from test set is still 2 seconds, replace 322442 circuit card (C2-2).
16. Does customer want 9140 Station Controller Option 21.b.?	Go to 19.	Cut strap 68. If AB delay after EOT and CDC1 sent from test set is still not 2 seconds, replace 322442 circuit card (C2-2).
17. From test set, send TSC of station. Does test set receive A/B1, A/B2?	Go to 23.	Go to 18.
18. Is any AB copied at test set in Question 17?	Go to 23.	Go to 26.
19. Was A/B1, A/B2 (answer-back character 1 followed by answer-back character 2) copied by test set in Question 2?	Go to 20.	Go to 22.
20. In addition to A/B1, A/B2, was some other character copied by test set in Question 2?	Go to 21.	Go to 23.
21. Was additional character received after A/B1, A/B2?	If option for hard turn-off of the station modem carrier was selected, try some soft turn-off option. If a soft turn-off of station modem carrier was selected, replace modem or try a longer soft turn-off.	Additional character was before A/B1, A/B2. Replace station modem or try a longer squelch or clear-to-send interval at station modem.
22. Was a single character AB like NULL or a not valid two or more character AB like NULL and ACK copied by test set?	Replace 322442 circuit card (C2-2). If trouble remains, check modem squelch. It may be too long (do not use 156 ms squelch).	Go to 34.

C. TERMINAL ANALYSIS FOR 40/3 (Cont)

ANALYSIS QUESTION	"YES" RESPONSE DIRECTIVE	"NO" RESPONSE DIRECTIVE
23. From test set, send text 1 and STX. Does station copy text 1? (Text 1 must not contain CDC or TSC of station.)	Replace 322451 circuit card (E2). Replace 322013 circuit card (C2).	Go to 24.
24. From test set, send CDC1. Does test set receive AB? NOTE: Ignore Model 40 response to CDC1.	Replace 322017 circuit card (F1). Replace 322013 circuit card (C2). Replace 322010 circuit card (A).	Go to 25.
25. From test set, send text 2 and EOT. Did station copy text 2 without error?	Go to 43.	Go to 41. (Station copied with error or did not copy at all.)
26. Bypass 9140 Station Controller by removing "9140 Station Controller to data set" cable from modem. Disconnect "Model 40 to 9140 Station Controller" cable from 9140 Station Controller and connect it to modem. ROP: IN SERVICE key must be lit. KD or KDP: REC key must be lit. Send a short message from the test set. CDC and STX are not required. Does the station copy message without error?	Go to 29. (Trouble is in 9140 Station Controller.)	Go to 27.

ANALYSIS QUESTION	"YES" RESPONSE DIRECTIVE	"NO" RESPONSE DIRECTIVE
27. Is station modem a 202T-Type Data Set or equivalent?	Go to 28.	If line is ok, replace modem. If new modem does not pass Question 26, isolate trouble to proper Model 40 component.
28. Does CO lamp light on station 202T-Type Data Set when test set sends as in Question 26?	Trouble is in modem.	If line is ok, trouble is in modem.
29. Put 9140 Station Controller back in the circuit by disconnecting "Model 40 to 9140 Station Controller" cable from modem and connecting it to 9140 Station Controller. Also connect "9140 Station Controller to data set" cable to modem. Turn off all power to station. Check three fuses in 333669 power supply and fuse on 9140 Station Controller. Use an ohmmeter. Are any fuses blown? NOTE: The 333669 power supply provides dc power to 9140 Station Controller.	Replace blown fuses. After all good fuses are reinstalled, restore power to station. If fuse blows again, replace 333669 power supply. If fuse blows with new power supply, restore original power supply and isolate to a circuit card or wired frame of 9140 Station Controller.	Restore all fuses. Restore power to station. Go to 30.
30. Check 333669 power supply outputs with voltmeter at "N" connector while "N" connector is plugged into "JN" connector of 333669 power supply. Purple wire (pin 6) is circuit common. Measure between -12 V dc	Go to 31.	Replace 333669 power supply.

C. TERMINAL ANALYSIS FOR 40/3 (Cont)

ANALYSIS QUESTION	"YES" RESPONSE DIRECTIVE	"NO" RESPONSE DIRECTIVE
30. (Cont) and -18 V dc on blue-white wire (pin 4). Measure between +12 V dc and +18 V dc on orange wire (pin 2). Are readings within specified voltage range?		
31. Measure voltage between circuit card connector G, pin A1 and circuit card connector G, pin A4. Is voltage on G-A1 between +5 V dc and +5.5 V dc?	Go to 32.	Replace 303808 circuit card (under heatsink of 9140 Station Controller). If new circuit card does not provide proper voltage, check 9140 Station Controller wiring or replace 328812 wired frame of 9140 Station Controller.
32. Do any CDC straps on 322010 circuit card (A) touch bottom of baud timer circuit card A-3 (piggyback, on card A)? NOTE: If in doubt, follow "Yes" Response Directive.	Add 345699 insulator (if available) to bottom of piggyback card. Use electrical tape if insulator is not available.	Go to 33.
33. Check coding of CDCs, TSC, X-ON, X-OFF, ACK, and FDX INT. Does each level (1 through 7) of each character have either an "M" or "S" strap cut? NOTE: Each level must have one strap cut and the other strap left in.	Replace 303805 circuit card (A-3C 1050 baud) or 303839 circuit card (A-3E 1200 baud). Replace 322010 circuit card (A). Replace 322011 circuit card (B). Replace 322411 circuit card (B-1).	Cut the proper straps.

ANALYSIS QUESTION	"YES" RESPONSE DIRECTIVE	"NO" RESPONSE DIRECTIVE
33. (Cont)	NOTE: Remove B-1 circuit card. If station works without B-1 circuit card, then circuit card was bad. Replace 322017 circuit card (F1). Replace 322013 circuit card (C2).	
34. Was A/B4, A/B4 (answer-back character 4 followed by answer-back character 4) received by test set in Question 2?	Go to 35.	Go to 37.
35. Measure voltage between circuit card connector E, pin 19 and circuit card connector E, pin A4. Is voltage on E-B19 about +9 V dc (from +3 V dc to +25 V dc)?	Go to 36.	Isolate trouble to Model 40 controller or cable between 9140 Station Controller and Model 40.
36. Measure voltage between circuit card connector E, pin A36 and circuit card connector E, pin A4. Is voltage on E-A36 approximately +5 V dc?	Replace 322013 circuit card (C2). Replace 322442 circuit card (C2-2).	Replace 322451 circuit card (E).
37. Was A/B3, A/B3 (answer-back character 3 followed by answer-back character 3) received by test set in Question 2?	Go to 38.	Go to 40.
38. Turn off all power to station. Is either strap 73 or 74 (or both) installed on 322442 circuit card (C2-2)?	Restore original C2 and C2-2 circuit cards. Restore all power to station. Go to 39.	Replace 322442 circuit card (C2-2).

C. TERMINAL ANALYSIS FOR 40/3 (Cont)

ANALYSIS QUESTION	"YES" RESPONSE DIRECTIVE	"NO" RESPONSE DIRECTIVE
39. Measure voltage between circuit card connector C, pin A5 and circuit card connector C, pin A4. Is voltage on C-A5 approximately +5 V dc?	Replace 322442 circuit card (C2-2).	Replace 322442 circuit card (C2-2). Check wiring at circuit card connector C, pin A5.
40. On station equipped with printer, raise printer lid. KD or KDP: Depress LOCAL key. All stations: From test set, send CDC1. Does test set receive A/B4, A/B4 (answer-back character 4 followed by answer-back character 4)?	Replace 322442 circuit card (C2-2) if A/B1, A/B2 strapping is correct.	Replace 322442 circuit card (C2-2). Replace 322013 circuit card (C2). Replace 322011 circuit card (B).
41. Bypass 9140 Station Controller by disconnecting "9140 Station Controller to data set" cable from modem. Disconnect "Model 40 to 9140 Station Controller" cable from 9140 Station Controller and connect it to modem. KD or KDP: REC key must be lit. ROP: IN SERVICE key must be lit. Send a short message from the test set (no CDC or STX is required). Does Model 40 copy message without error?	Go to 42.	Isolate trouble to Model 40 controller or cable between Model 40 and 9140 Station Controller.

ANALYSIS QUESTION	"YES" RESPONSE DIRECTIVE	"NO" RESPONSE DIRECTIVE
42. If 9140 Station Controller is still bypassed, place it back in the circuit (connect Model 40 to 9140 Station Controller, and 9140 Station Controller to modem). When text 2 was sent in Question 25, did station copy anything?	Replace 322451 circuit card (E2). Replace 322011 circuit card (B).	Replace 322017 circuit card (F1). Replace 322013 circuit card (C2). Replace 322451 circuit card (E2).
43. KD or KDP: In Step 25, did station go to local mode upon receiving EOT? ROP or KDP: In Question 25, did printer motor stop upon receiving EOT? NOTE: Printer paper feed out is not checked in this step.	Go to 45.	Go to 44.
44. KD or KDP: Measure voltage between circuit card connector E, pin A10 and circuit card connector E, pin A4. Is voltage on E-A10 approximately -9 V dc (-3 V dc to -25 V dc is acceptable)? ROP: Measure voltage between circuit card connector E, pin B36 and circuit card connector E, pin B4. Is voltage on E-B36 approximately -9 V dc (-3 V dc to -25 V dc is acceptable)?	Isolate trouble to Model 40 or cable between Model 40 and 9140 Station Controller. NOTE: If Model 40 Option 37.b. is installed, change option to 37.a.	Replace 322451 circuit card (E2). Replace 322017 circuit card (F1).

C. TERMINAL ANALYSIS FOR 40/3 (Cont)

ANALYSIS QUESTION	"YES" RESPONSE DIRECTIVE	"NO" RESPONSE DIRECTIVE
45. KD or KDP: LOCAL key is lit. ROP: Raise printer cabinet lid. All stations: From test set, send CDC1. Does test set copy A/B4, A/B4?	Go to 48.	9140 Station Controller Option 19.a.: Go to 46. 9140 Station Controller Option 19.b.: Go to 48.
46. Did test set copy A/B1, A/B2 in Question 45?	Go to 47.	9140 Station Controller Option 17.a. or 17.b.: Replace 322442 circuit card (C2-2). Replace 322013 circuit card (C2). 9140 Station Controller Option 17.c.: Go to 48.
47. Measure voltage between circuit card connector E, pin B19 and circuit card connector E, pin B4. Is voltage at E-B19 approximately -9 V dc (-3 V dc to -25 V dc is acceptable)?	Replace 322442 circuit card (C2-2). Replace 322013 circuit card (C2).	Isolate trouble to Model 40 or cable between Model 40 and 9140 Station Controller.
48. From test set, send TSC. Does test set copy A/B4, A/B4? NOTE: If 9140 Station Controller Option 2.b. is installed, then TSC is TSC character 1, TSC character 2, Delete.	9140 Station Controller Option 18.a.: Go to 52. 9140 Station Controller Option 18.b: Replace 322442 circuit card (C2-2).	Go to 49.
49. Did test set receive A/B1, A/B2 in Question 48?	9140 Station Controller Option 18.a.: Replace 322442 circuit card (C2-2). 9140 Station Controller Option 18.b.: Go to 52.	Go to 50.

ANALYSIS QUESTION	"YES" RESPONSE DIRECTIVE	"NO" RESPONSE DIRECTIVE
50. Was a single character AB like NULL or a not valid two or more character AB like NULL and ACK copied by test set?	Replace 322442 circuit card (C2-2). If trouble remains, check modem squelch. It may be too long (do not use 156 ms squelch).	Go to 51.
51. Measure voltage between circuit card connector D, pin B9 and circuit card connector D, pin B4 when TSC is sent from test set. Is voltage at D-B9 ever approximately +5 V dc? In this step, a momentary positive deflection of the meter can be considered to be +5 V dc.	9140 Station Controller Option 17.a. or 17.b.: Replace 322442 circuit card (C2-2). Replace 322013 circuit card (C2). Replace 322014 circuit card (D1). 9140 Station Controller Option 17.c.: Replace modem. If station still does not send AB to a TSC, replace circuit cards listed above.	Check TSC coding on 322014 circuit card (D1). If correct, replace the circuit card (D1).
52. In addition to A/B1, A/B2 (or A/B4, A/B4), was some other character copied by test set in Question 48?	Go to 53.	Go to 54.
53. Was additional character after A/B1, A/B2 (or A/B4, A/B4)?	If option for hard turn-off of station modem carrier was selected, try some soft turn-off option. If a soft turn-off of station modem was selected, replace modem or try a longer soft turn-off.	Additional character was before A/B1, A/B2 (or A/B4, A/B4). Replace station modem or try a longer squelch or clear-to-send interval at station modem.
54. KD or KDP: Depress REC key. ROP: Lower and latch printer cabinet lid. All stations: From test set, send TSC. Does test set copy A/B1, A/B2?	Go to 55.	Replace 322442 circuit card (C2-2). Replace 322013 circuit card (C2).

C. TERMINAL ANALYSIS FOR 40/3 (Cont)

ANALYSIS QUESTION	"YES" RESPONSE DIRECTIVE	"NO" RESPONSE DIRECTIVE
55. Is station a KD or KDP? (If KD or KDP is only part of station, treat station as if it is a KD or KDP.)	Go to 56.	Station is an ROP. Go to 64.
56. In local mode, prepare a short message on display: STX, 20 or 30 "U*" characters, and EOT. If cursor is not in Home position, depress HOME key. If SEND key is not lit, depress SEND key. (If these actions cannot be performed, trouble is in Model 40 controller.) Does cursor begin moving?	Turn off all power to station. Check that Model 40 Option 37.a. is installed, as required. If Model 40 Option 37.a. is installed, replace 410771 circuit card in KD or KDP controller. If trouble remains, isolate problem within Model 40 controller. Refer to Controller Analysis in Part 6. Go to Page 4-65, 7. KD OR KDP CONTROLLER FOR 40/3 APPLICATIONS.	Go to 57.
57. From test set, send TSC. Does test set copy message?	Go to 58.	Go to 59.
58. Is message received at test set in Question 57 without error?	Go to 62.	Go to 61.
59. Did test set receive any AB in Question 57?	Go to 60.	Go to 61.
60. Measure voltage between circuit card connector E, pin B33 and circuit card connector E, pin B4. Is voltage at E-B33 approximately +9 V dc (+3 V dc to +25 V dc is acceptable)?	Replace 322451 circuit card (E2). Replace 322014 circuit card (D1). Replace 322442 circuit card (C2-2). Replace 322013 circuit card (C2).	Isolate to Model 40 controller or cable between Model 40 and 9140 Station Controller.

ANALYSIS QUESTION	"YES" RESPONSE DIRECTIVE	"NO" RESPONSE DIRECTIVE
61. Depress LOCAL and HOME keys. Bypass 9140 Station Controller by disconnecting "9140 Station Controller to data set" cable from modem. Disconnect "Model 40 to 9140 Station Controller" cable from 9140 Station Controller and connect it to modem. Depress SEND key. Does test set copy without error?	Trouble is in 9140 Station Controller. Reconnect 9140 Station Controller and replace 322451 circuit card (E2). Replace 322014 circuit card (D1). Replace 322011 circuit card (B). Replace 322013 circuit card (C2). Replace 322083 circuit card (G3). Replace 322442 circuit card (C2-2).	Refer to Page 4-65, 7. KD OR KDP CONTROLLER FOR 40/3 APPLICATIONS.
62. Did cursor on Model 40 keep moving after EOT?	Refer to Page 4-65, 7. KD OR KDP CONTROLLER FOR 40/3 APPLICATIONS.	Go to 63.
63. Does station modem carrier remain on after EOT is sent?	Replace 322083 circuit card (G3). Replace 322014 circuit card (D1). Replace 322017 circuit card (F1). Replace 322013 circuit card (C2). Replace 322451 circuit card (E2).	Go to 64.
64. Is CDC2 coded different than CDC1?	Go to 65.	Go to 70.
65. ROP: IN SERVICE key must be lit. KD or KDP: REC key must be lit. KDP: PRINT ON LINE key must be lit.	Go to 66.	9140 Station Controller Option 17.d. or 17.e.: Check CDC2 strapping on 322010 circuit card (A). If straps are correct replace circuit card (A). 9140 Station Controller Option 17.f.: Go to 69.

C. TERMINAL ANALYSIS FOR 40/3 (Cont)

ANALYSIS QUESTION	"YES" RESPONSE DIRECTIVE	"NO" RESPONSE DIRECTIVE
65. (Cont) All stations: From test set, send CDC2? Does test set copy some answer-back?		
66. In Question 65, was answer-back A/B1, A/B2?	9140 Station Controller Option 17.d. or 17.e. is installed. Check that order calls for this option. Go to 67.	Answer-back to CDC2 must be correct if AB to CDC1 was correct. Go back to 2.
67. ROP: Raise printer cabinet lid. KD or KDP: Depress LOCAL key. All stations: From test set, send EOT and CDC2. Does test get copy A/B4, A/B4?	9140 Station Controller Option 19.c. is installed. ROP: Lower and latch printer cabinet lid. KD or KDP: Depress REC key. All stations: Go to 70.	Go to 68.
68. Is 9140 Station Controller Option 19.d. installed?	ROP: Lower and latch printer cabinet lid. KD or KDP: Depress REC key. All stations: Go to 70.	Replace 322010 circuit card (A).
69. From test set, send STX, text, and EOT. Does station copy text?	Go to 70.	Check CDC2 strapping on 322010 circuit card (A). If straps are correct replace circuit card (A).
70. Is 322409 circuit card (A-1) present in 9140 Station Controller?	Go to 71.	Go to 75.
71. From test set, send CDC3. Is answer-back received at test set?	Go to 72.	9140 Station Controller Option 17.g. or 17.h.: Check CDC3 strapping on 322409 circuit card (A-1). If straps are correct, replace circuit card (A-1). 9140 Station Controller Option 17.i.: Go to 74.

ANALYSIS QUESTION	"YES" RESPONSE DIRECTIVE	"NO" RESPONSE DIRECTIVE
72. ROP or KDP: Raise printer cabinet lid. KD or KDP: Depress LOCAL key. All stations: From test set, send EOT and CDC3. Does test set copy A/B4, A/B4?	ROP or KDP: Lower and latch printer cabinet lid. KD or KDP: Depress REC key. All stations: Go to 75.	Go to 73.
73. Is 9140 Station Controller Option 19.f. installed?	KD or KDP: Depress REC key. ROP or KDP: Lower and latch printer cabinet lid. All stations: Go to 75.	Replace 322409 circuit card (A-1).
74. From test set, send STX, text, and EOT. Does station copy text?	Go to 75.	Check CDC3 strapping on 322409 circuit card (A-1). If straps are correct, replace circuit card (A-1). Replace 322010 circuit card (A).
75. Is station equipped with 345625 alarm modification kit? Identify by presence of 322641 circuit card (mounted piggy-back on G3 circuit card).	Go to 76.	Go to 89.
76. KD or KDP: Depress LOCAL key. ROP or KDP: Raise printer cabinet lid. All stations: From test set, send CDC1. Does alarm sound for approximately the time chosen in 9140 Station Controller Option 27?	Go to 79.	Go to 77.

C. TERMINAL ANALYSIS FOR 40/3 (Cont)

ANALYSIS QUESTION	"YES" RESPONSE DIRECTIVE	"NO" RESPONSE DIRECTIVE
77. Does alarm sound at all in Question 76?	Check strapping on 322641 circuit card (piggyback on G3). If strapping is correct, replace 322641 circuit card. Replace 322083 circuit card (G3).	Go to 78.
78. Remove black clip-on wire from circuit card connector G, pin B33. Touch it to circuit card connector G, pin B4. Does alarm sound?	Restore black wire to pin B33 on connector G. Replace 322641 circuit card (piggyback on G3 circuit card). Replace 322083 circuit card (G3).	Replace 345626 alarm assembly.
79. KD or KDP: Depress REC key. ROP or KDP: Lower and latch printer cabinet lid. All stations: Is 9140 Station Controller Option 1.h. (FDX INT) used in the system the station is part of?	Go to 80.	Go to 89.
80. From test set, send CDC1. Test set copies A/B1, A/B2 if 9140 Station Controller Option 17.a. or 17.b. is used. From test set send STX, text, FDX INT, and CDC1. Does test set copy A/B1, A/B2 after FDX INT and CDC1?	Go to 83.	Go to 81.

ANALYSIS QUESTION	"YES" RESPONSE DIRECTIVE	"NO" RESPONSE DIRECTIVE
81. Did test set receive A/B3, A/B3 in Question 80?	Replace 322442 circuit card (C2-2). Replace 322641 circuit card (piggyback on G3). Replace 322411 circuit card (B-1).	Go to 82.
82. Does test set copy any AB?	Check A/B3 strapping on 322442 circuit card (C2-2). If strapping is correct, replace C2-2 circuit card.	9140 Station Controller Option 17.a. or 17.b.: Check FDX INT strapping on 322013 circuit card (C2). Replace 322013 circuit card (C2). Replace 322014 circuit card (D1). 9140 Station Controller Option 17.c.: Go to 83.
83. From test set, send EOT and CDC1. Does test set copy A/B1, A/B2?	Go to 84.	9140 Station Controller Option 17.c.: Go to 84. 9140 Station Controller Option 17.a. or 17.b.: Station should have failed other tests. Go to 2.
84. From test set, send STX, text (with parity error), FDX INT, and CDC1. Does test set copy A/B3, A/B3?	Go to 85.	9140 Station Controller Option 20.b. or 20.d. must be installed. Replace 322442 circuit card (C2-2). Replace 322641 circuit card (piggyback on G3). Replace 322411 circuit card (B-1).
85. From test set, send STX, FDX INT, and CDC1. Does test set copy A/B3, A/B3?	9140 Station Controller Option 27.d.: Replace 322641 circuit card (piggyback on G3). 9140 Station Controller Option 27.e.: Go to 87.	Go to 86.

C. TERMINAL ANALYSIS FOR 40/3 (Cont)

ANALYSIS QUESTION	"YES" RESPONSE DIRECTIVE	"NO" RESPONSE DIRECTIVE
86. Was AB received in Step 85 A/B1, A/B2?	9140 Station Controller Option 27.d.: Go to 87. 9140 Station Controller Option 27.e.: Replace 322641 circuit card (piggyback on G3). Replace 322442 circuit card (C2-2).	Replace 322641 circuit card (piggyback on G3). Replace 322442 circuit card (C2-2).
87. From test set, send EOT and CDC1. AB from station depends on 9140 Station Controller Option 17. From test set, send STX, text (with parity error), FDX INT, and CDC1. Test set copies A/B3, A/B3. From test set send EOT and CDC1. Does test set copy A/B1, A/B2?	Go to 89.	9140 Station Controller Option 17.a. or 17.b.: Go to 88. 9140 Station Controller Option 17.c.: Go to 90.
88. Does test set copy A/B3, A/B3 in Question 87?	Replace 322442 circuit card (C2-2). Replace 322641 circuit card (piggyback on G3).	Station should have failed other steps also. Go to 2.
89. From test set send EOT. Is LOCAL key lit at station? NOTE: LOCAL key may already be lit.	Depress REC key. Go to 90.	Go to 90.
90. From test set, send EOT and CDC (where CDC is another station CDC). If station is receiving messages directed to another station, the other station CDC should be tried in	Check CDC coding on 322010 circuit card (A) and 322409 circuit card (A-1), if present. If both M and S straps of some level (1 through 7) are cut, that is the problem. If coding is correct, replace 322010 circuit card (A).	Go to 91.

ANALYSIS QUESTION	"YES" RESPONSE DIRECTIVE	"NO" RESPONSE DIRECTIVE
90. (Cont) this step. The other station must not be connected to test set. Does test set copy an AB?	Replace 322409 circuit card (A-1), if present.	
91. From test set, send STX, text, and EOT. Does station copy text?	Check CDC coding on 322010 circuit card (A) and 322409 circuit card (A-1), if present. If both M and S straps of some level (1 through 7) are cut, that is the problem. If coding is correct, replace 322010 circuit card (A). Replace 322409 circuit card (A-1), if present.	Go to 92.
92. Is KD or KDP part of station?	Go to 93.	Station is an ROP. Go to 94.
93. From test set, send EOT and TSC (where TSC is another station TSC). If station is sending a response to another station TSC, the other station TSC should be tried in this step. The other station must not be connected to test set. Does test set copy an AB?	Check TSC coding on 322014 circuit card (D1). If both M and S straps of some level (1 through 7) are cut, that is the problem. If coding is correct, replace 322014 circuit card (D1).	Go to 94.
94. Is station part of a system that uses "break" operation to deselect receivers and/or halt senders? NOTE: "Break" is a 300 ms space sent from computer data set.	Go to 95.	"Break" is not used in this system. Place station in service.

C. TERMINAL ANALYSIS FOR 40/3 (Cont)

ANALYSIS QUESTION	"YES" RESPONSE DIRECTIVE	"NO" RESPONSE DIRECTIVE
95. Does station contain a KD or KDP?	Go to 96.	Station is an ROP. Go to 97.
96. With a long message on display and SEND key lit, send TSC from test set. After test set begins receiving, send a break signal from test set. Does station cursor stop, REC key light, and SEND key light go out?	Place station in service.	Go to 98.
97. From test set, send EOT and CDC1. Printer motor will start. Disreagard AB. Send a break signal from test set. Does printer motor stop?	Place station in service.	Go to 98.
98. Depress LOCAL, HOME, and SEND keys. From test set, send TSC. After test set begins receiving, it sends a break signal. While "break" is being sent, measure voltage between circuit card connector D, pin B36 and circuit card connector D, pin B4. Is voltage at D-B36 ever approximately +12 V dc? NOTE: A momentary positive deflection of the meter can be considered to be +12 V dc.	Isolate trouble to cable between Model 40 and 9140 Station Controller, or 410771 circuit card (KD or KDP controller), or Model 40 controller (all stations).	Voltage is approximately 0 V dc. Replace 322014 circuit card (D1). Replace 322013 circuit card (C2). Replace 322451 circuit card (E1).

D. COMPONENT ANALYSIS

1. 40PSU101 POWER SUPPLY

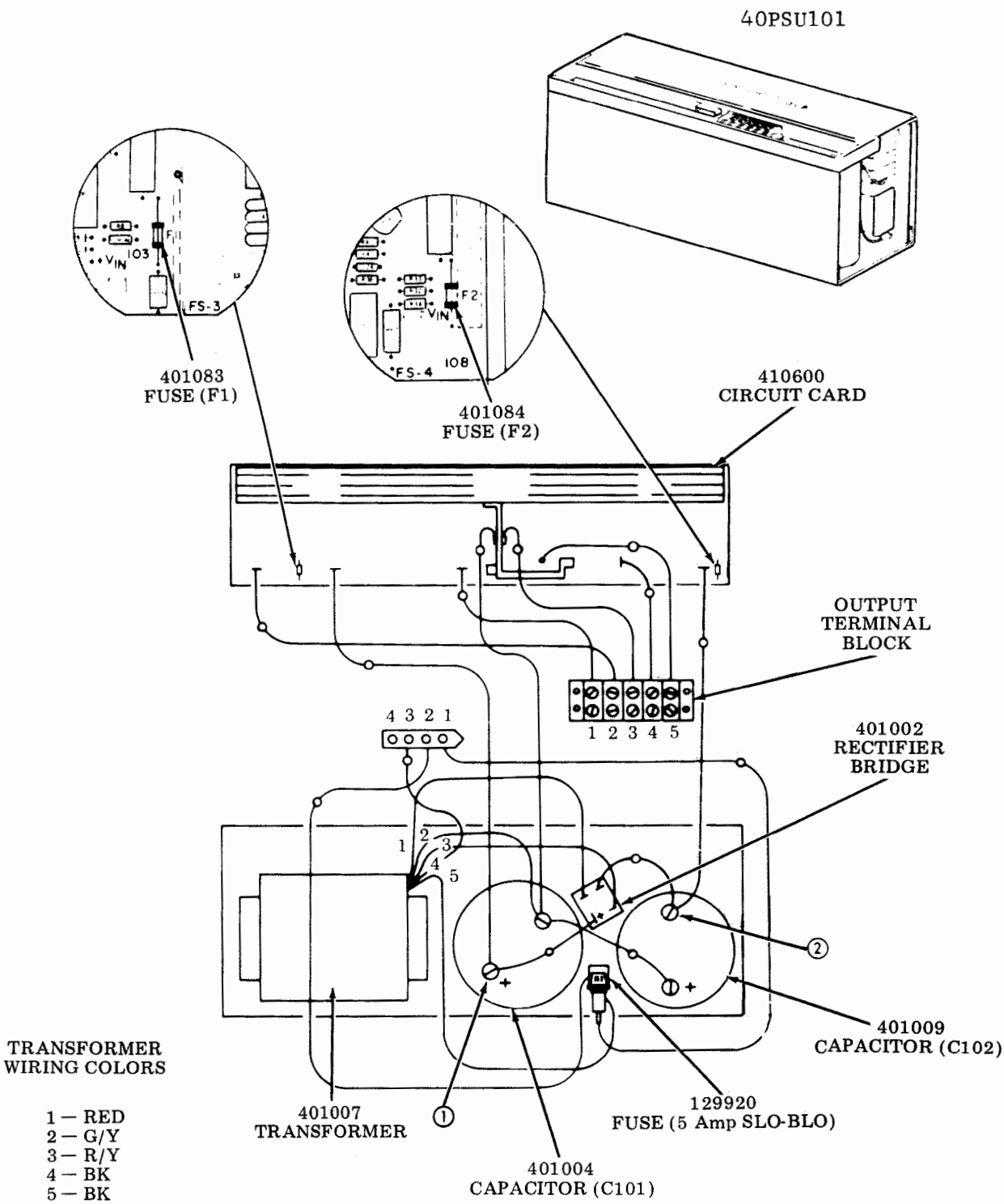

D. COMPONENT ANALYSIS (Cont)

1. 40PSU101 POWER SUPPLY (Cont)

ANALYSIS QUESTION	"YES" RESPONSE DIRECTIVE	"NO" RESPONSE DIRECTIVE
1. With the set plugged in and power ON, are all LED indicators ON? 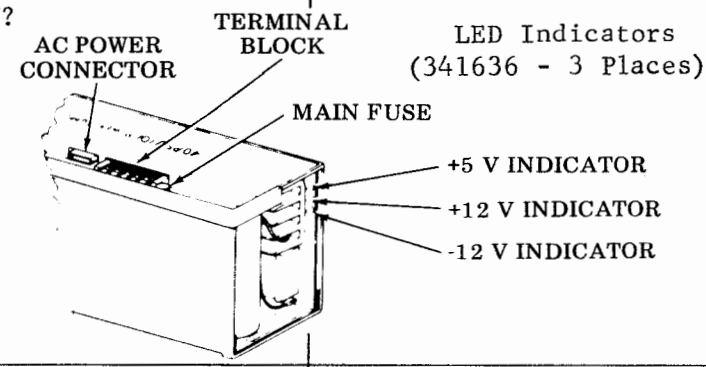	Go to 2.	Go to 4.
2. Are all voltages correct at the output terminal block? 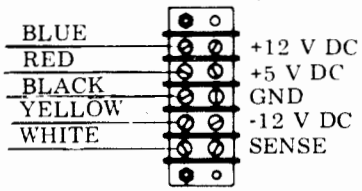 Output Terminal Block	Put power supply in service.	Check for +24 V dc (test point ①) and -24 V dc (test point ②) at inputs to 410600 circuit card. Measure both voltages with respect to circuit ground at terminal 3 of the output terminal block. Go to 3.
3. Are the ±24 V dc inputs to 410600 circuit card correct?	Check for +5 V dc at output terminal block, and adjust R45 potentiometer on 410600 circuit card if necessary. Refer to POWER SUPPLY adjustments in PART 7 -- COMPONENT ACCESS. If +5 V dc cannot be adjusted, replace 410600 circuit card.	Check and/or replace rectifier bridge (401002). Check and/or replace transformer (401007). Check and/or replace capacitors C101 (401004) and/or C102 (401009).
4. Are the ventilation fans in the electronics module moving air?	Go to 5.	Check ac power input, power switch(es), cabinet wiring and connectors, etc.

ANALYSIS QUESTION	"YES" RESPONSE DIRECTIVE	"NO" RESPONSE DIRECTIVE
5. Is main fuse on the power supply blown?	Replace fuse and go to 6. (129920 fuse 5 amp SLO-BLO)	Go to 7.
6. Did main fuse blow again?	Disconnect cable(s) from output terminal block (to controller and, if present, to display logic). Replace fuse and check output voltages. If no output voltages and fuse blows again, check for short circuit condition in power supply. If output voltages are present (power supply OK), check for short elsewhere in set.	Go to 7.
7. Is the +5 volt LED off?	Go to 8.	Go to 9.
8. Is +5 V dc present at the output?	Replace LED (341636).	Check continuity of fuses F1 and F2 on 410600 circuit card. Check for +24 V dc (test point ①) and -24 V dc (test point ②) inputs to 410600 circuit card. Measure with respect to circuit ground (terminal 3 of the output terminal block). Check for broken wire on 410600 circuit card. Go to 11.
9. Is the +12 volt LED off?	Go to 10.	Go to 12.

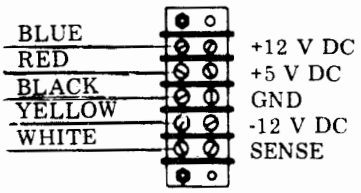

Output Terminal Block

D. COMPONENT ANALYSIS (Cont)

1. 40PSU101 POWER SUPPLY (Cont)

ANALYSIS QUESTION	"YES" RESPONSE DIRECTIVE	"NO" RESPONSE DIRECTIVE
10. Is +12 V dc present at the output? 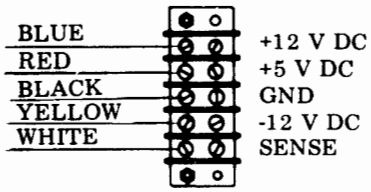 Output Terminal Block	Replace LED (341636).	Check continuity of fuses F1 and F2 on 410600 circuit card. Check for +24 V dc (test point ①) and -24 V dc (test point ②) inputs to 410600 circuit card. Check for broken wire on 410600 circuit card. Go to 11.
11. Are fuses F1 and F2 good, and are ±24 V dc inputs presented to 410600 circuit card?	Replace 410600 circuit card.	Check and/or replace rectifier bridge (401002). Check and/or replace transformer (401007).
12. Is the -12 volt LED off?	Go to 13.	Go to 1.
13. Is -12 V dc present at the output? 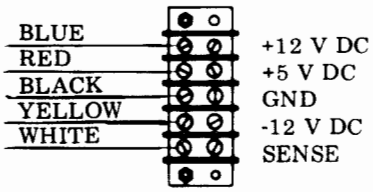 Output Terminal Block	Replace LED (341636).	Check continuity of fuses F1 and F2 on 410600 circuit card. Check for +24 V dc (test point ①) and -24 V dc (test point ②) at inputs to 410600 circuit card. Check for broken wires on 410600 circuit card. Go to 14.
14. Are fuses F1 and F2 good, and are ±24 V dc inputs presented to 410600 circuit card.	Replace 410600 circuit card.	Check and/or replace rectifier bridge (401002). Check and/or replace transformer (401007).

2. 40MN101 DISPLAY MONITOR

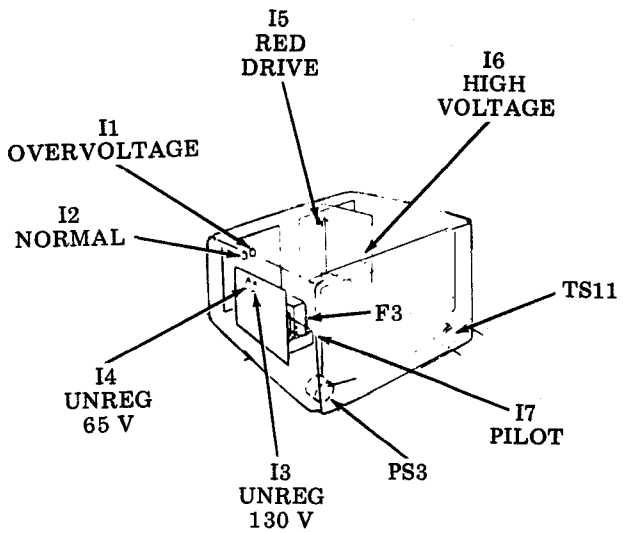

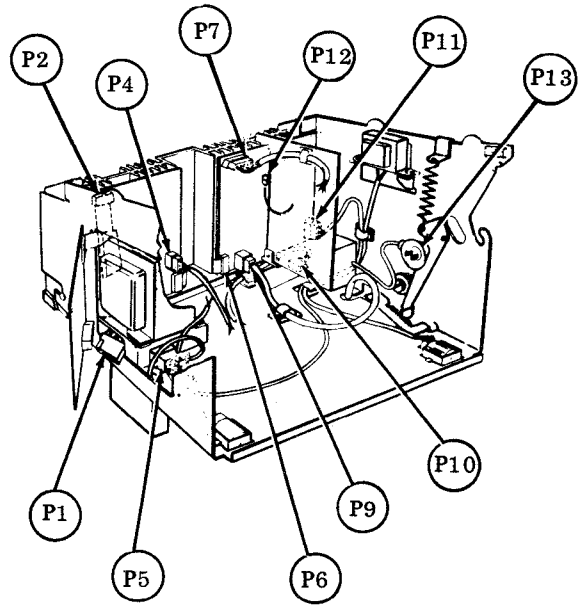

NOTE: Display monitor units with serial no. below 10,000 require 403594 modification kit for compatibility with 40PSU101 power supply units with serial no. 10,000 or higher. See Page 7-27.

ANALYSIS QUESTION	"YES" RESPONSE DIRECTIVE	"NO" RESPONSE DIRECTIVE
1. With power ON is the red DRIVE lamp I5 ON? (Typical failure is a dark screen -- no display.)	Go to 2.	Check that connector P9 is plugged into 410656 circuit card. Replace 410656 circuit card. Check continuity of 341582 video cable assembly: P9, terminals 8, 9, 10, 12, 14, and 15 to J15, terminals 8, 9, 10, 12, 14, and 15 respectively.

D. COMPONENT ANALYSIS (Cont)

2. 40MN101 DISPLAY MONITOR (Cont)

ANALYSIS QUESTION	"YES" RESPONSE DIRECTIVE	"NO" RESPONSE DIRECTIVE
2. Is the PILOT lamp I7 ON? 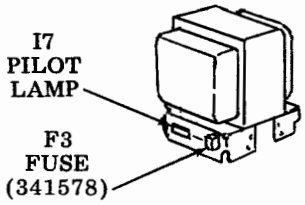 341721 Power Distribution Assembly	Go to 4.	Check fuse F3 for continuity. Replace if open circuit. If fuse F3 is good, check for 115 V ac on connector P5, terminals 10 to 12. 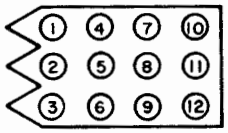 Wire Side of P5 Connector If no 115 V ac, check continuity or replace 341581 ac cable assembly. If 115 V ac is present, replace 341721 power distribution assembly. Go to 3.
3. Does fuse F3 continue to fail when replaced?	Replace 410852 circuit card assembly. Replace 410853 circuit card assembly. Replace transistor Q1 (341569) on heat sink. Replace transistor Q2 (318822) on heat sink.	Go to 4.
4. Are the CRT filaments glowing? (Failure is no display -- dark screen.)	Go to 5.	With display monitor control switch PS3 OFF (CW) and connector P16 disconnected from CRT neck, check for 5.4 V ac ±10% at P16, terminals 1 to 8.

ANALYSIS QUESTION	"YES" RESPONSE DIRECTIVE	"NO" RESPONSE DIRECTIVE
4. (Cont) 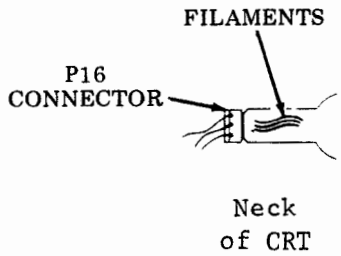 		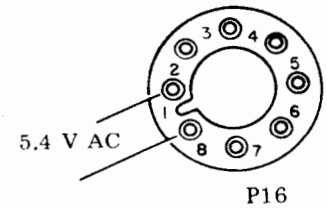 If 5.4 V ac is present, replace CRT. If no 5.4 V ac, check as follows: a. Turn all power OFF. b. Disconnect P5. c. Check continuity of P5, terminal 1 to P16, terminal 8. d. Check continuity of P5, terminal 4 to P16, terminal 1. If no continuity, replace 341699 cable assembly. If continuity checks good, replace 341721 power distribution assembly.
5. Are 65 V and 130 V unregulated lamps (I4 and I3) ON?	Go to 6.	Remove the 410852 circuit card from the display monitor and check for 135 V ac ±10% on connector P1, terminals 4 to 5. If 135 V ac is present, replace 410852 circuit card (with a new card). If no 135 V ac, replace 341721 power distribution assembly.

D. COMPONENT ACCESS (Cont)

2. 40MN101 DISPLAY MONITOR (Cont)

ANALYSIS QUESTION	"YES" RESPONSE DIRECTIVE	"NO" RESPONSE DIRECTIVE
6. Is the NORMAL lamp I2 ON? 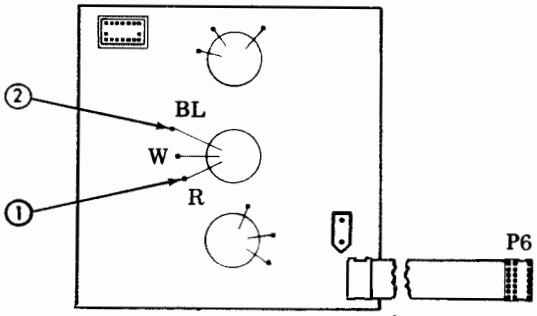 410853 Circuit Card Assembly	Go to 7.	Check for 190 V dc ±10% from test point 1 on 410853 circuit card (red lead) to frame ground (chassis). If no 190 V dc, check that connector P2 is plugged into the 410853 circuit card. If P2 is connected, replace 410852 circuit card. If 190 V dc is present, check for 130 V dc ±10% from test point 2 on 410853 circuit card (blue lead) to frame ground (chassis). If no 130 V dc, replace 410853 circuit card. If 130 V dc is present, replace transistor Q2 (318822) on heat sink.
7. Is OVER VOLTAGE lamp I1 OFF? (Typical trouble symptom -- display expanded horizontally.)	Go to 8.	Replace 410853 circuit card assembly in the display monitor.

ANALYSIS QUESTION	"YES" RESPONSE DIRECTIVE	"NO" RESPONSE DIRECTIVE
8. Is HIGH VOLTAGE lamp I6 ON? (Typical failure is a dark screen -- no display.)	Go to 9. 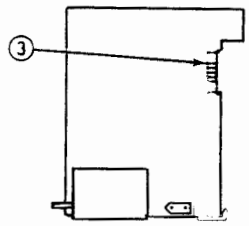 410854 Circuit Card Assembly 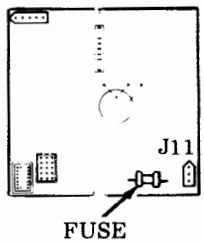 FUSE (See green and orange marking at opposite ends.) 410656 Circuit Card Assembly 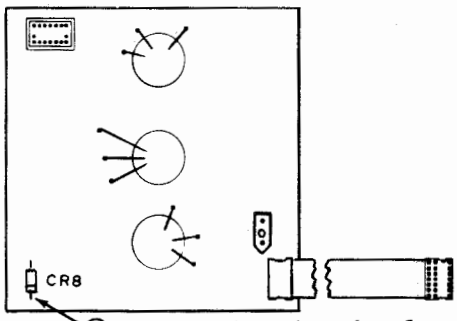 4 Test point is the lowest component lead at lower left corner of card. 410853 Circuit Card Assembly	Check for 130 V dc ±10% from test point 3 on 410854 circuit card (terminal 3 of card edge connector P8) to frame ground (chassis). If 130 V dc is present, replace 410854 circuit card. If I6 is still OFF, replace 410656 circuit card. If no 130 V dc, check continuity of the fuse on 410656 circuit card (bottom of card to the left of connector P11). If the fuse is open, replace it with an 18-gauge wire strap. NOTE: Later design cards will have a wire strap or circuit land. Check that connector P6 is plugged into 410656 circuit card. Check for 130 V dc ±10% at test point 4 on 410853 circuit card to frame ground (chassis). If no 130 V dc, replace 410853 circuit card. If 130 V dc is present, replace 410853 circuit card and then 410656 circuit card, if I6 is still OFF.
9. Is there still a display problem?	Go to 10.	Display monitor is OK; problem is elsewhere.

D. COMPONENT ACCESS (Cont)

2. 40MN101 DISPLAY MONITOR (Cont)

ANALYSIS QUESTION	"YES" RESPONSE DIRECTIVE	"NO" RESPONSE DIRECTIVE
10. Is there a bright horizontal line on the display monitor? 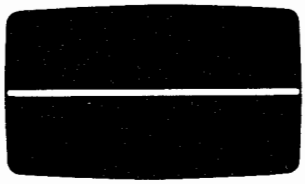	Decrease brightness (rotate TS11 clockwise) until line is not bright. If the horizontal line now appears dashed, go to 11. Check three wires from heat sink transistor Q1 to 410853 circuit card. Check for 65 V dc ±10% at test point ⑤ on 410853 circuit card to frame ground (chassis). If 65 V dc is present, replace heat sink transistor Q1 (341569). Check continuity of the fuse on 410656 circuit card (bottom of card to the left of connector P11). If the fuse is open, replace it with an 18-gauge wire strap. If fuse is good, replace 410853 circuit card.	Go to 11. 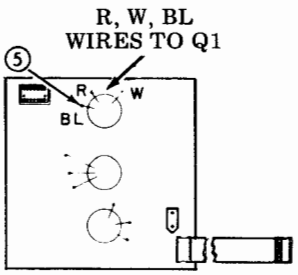 410853 Circuit Card Assembly 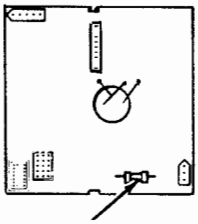 FUSE (See green and orange marking at opposite ends.) 410656 Circuit Card Assembly
11. Is there a dashed horizontal line on the display monitor? 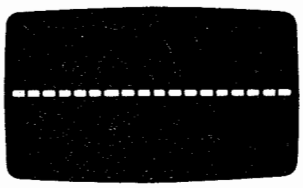	Check that connector P4 is plugged into 410853 circuit card. Replace heat sink transistor Q3 (341568). Replace 410853 circuit card.	Go to 12.

ANALYSIS QUESTION	"YES" RESPONSE DIRECTIVE	"NO" RESPONSE DIRECTIVE
12. Is there a raster (rectangular lighted background area visible when brightness is turned up -- TS11 full CCW) but no cursor, segment marker, or characters?	Replace 410656 circuit card. Check continuity of video cable (341582) dot information leads: P9, terminal 3 to J15, terminal 3 and P9, terminal 6 to J15, terminal 6.	Go to 13.
13. Is display rolling?	Replace 410853 circuit card. Replace 410656 circuit card. Check continuity of video cable (341582) vertical sync leads: P9, terminal 11 to J15, terminal 11 and P9, terminal 13 to J15, terminal 13.	Go to 14.
14. Can brightness be controlled by turning the operator brightness control TS11?	Go to 15.	Check that connector P11 is plugged into the 410656 circuit card. Check continuity of 341559 brightness control w/cable assembly: P11, terminals 1 to 3 and P11, terminals 1 to 2 where resistance reading should vary as TS11 is rotated. Replace 410656 circuit card.

D. COMPONENT ACCESS (Cont)

2. 40MN101 DISPLAY MONITOR (Cont)

ANALYSIS QUESTION	"YES" RESPONSE DIRECTIVE	"NO" RESPONSE DIRECTIVE
15. Is the display reduced to approximately 3/4 inch in height?	Replace 410853 circuit card.	Go to 16.
16. Is there a dim vertical line on the display monitor?	Check that connector P10 is plugged into the 410854 circuit card. Replace 410854 circuit card.	Go to 17.
17. Can characters be highlighted?	Display monitor is OK; trouble is elsewhere.	Replace 410656 circuit card. Check continuity of video cable (341582) highlight leads: P9, terminal 1 to J15, terminal 1 and P9, terminal 2 and J15, terminal 2.

3. OPERATOR CONSOLE (OPCON)

40K101/CAK

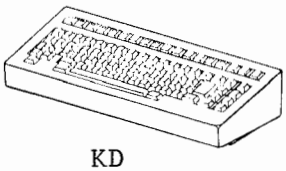

KD

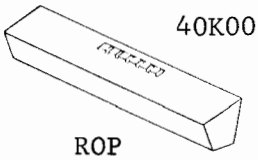

40K001/AAA

ROP

ANALYSIS QUESTION	"YES" RESPONSE DIRECTIVE	"NO" RESPONSE DIRECTIVE
1. Does opcon have a keyboard?	Go to 2.	Go to 17.
2. Do any keys generate characters on the screen?	Go to 3.	Go to 9.

ANALYSIS QUESTION	"YES" RESPONSE DIRECTIVE	"NO" RESPONSE DIRECTIVE
3. Do any keys repeat when depressed normally? (Not fully depressed on repeat keys.)	Check all repeat keys for mechanical operation (see Question 7.). Replace opcon.	Go to 4.
4. Do any repeat keys repeat when fully depressed? (After a slight delay on some units.)	Go to 6.	Another key may be stuck in the partially depressed condition. (Check mechanical operation of that keyswitch -- see Question 7.). Check for proper orientation of control (top) row of blocking keytops. Rear → ← Front Go to 5.
5. Does a single character appear on the screen when power is first turned on?	Check mechanical operation of that keyswitch -- (see Question 7.).	Go to 6.
6. Are any characters displayed when key is not depressed? (ie, key touched, opcon vibrated, or other keys operated.)	Replace opcon.	Go to 7.
7. Do any keys fail to operate mechanically? All keys click when depressed and click again when released. Repeat or test keys click when fully depressed and click again when released slightly. CAPS LOCK key locks down when depressed and releases when depressed again (if present).	Check clearance between keyboard cover and keytops (adjust if necessary). Check spacebar mechanism. Replace defective keyswitch.	Go to 8.

D. COMPONENT ACCESS (Cont)

3. OPERATOR CONSOLE (OPCON) (Cont)

ANALYSIS QUESTION	"YES" RESPONSE DIRECTIVE	"NO" RESPONSE DIRECTIVE
8. Do any keys fail to generate characters to the screen?	Replace opcon if any groups of keys fail to operate or more than one character generated when one key is depressed. Go to 12. if only one key fails to operate.	Go to 9.
9. Do any indicators fail to light?	Go to 11.	Go to 10.
10. Does bell sound with loudness controlled by thumbwheel? (On full edit sets only.)	Go to 11.	Replace the 410055 interface/bell card.
11. Does [TST] lamp light while [RETURN] and [ESC P] keys are fully depressed simultaneously? (Replace opcon if [TST] lamp does not extinguish when keys are released.)	Remove opcon from cabinet. Check for +12 V dc (pin 7) and -12 V dc (pin 8) with respect to ground (pin 9) on connector P1 of logic cabinet. If either voltage is absent, check cable to opcon in cabinet, then go to 1. 40PSU101 POWER SUPPLY (Page 4-31). If ±12 V dc is present, go to 12.	Go to 13.
12. Does [TST] lamp light when [RETURN] and [" ,] keys are fully depressed simultaneously?	Go to 14. if indicator failed to light (Question 9.). Go to 15. if key failed to generate characters to the screen (Question 8.).	Check mechanical operation of [" ,] keyswitch (see Question 7.). Replace the 410055 interface/bell card.

ANALYSIS QUESTION		"YES" RESPONSE DIRECTIVE	"NO" RESPONSE DIRECTIVE
12. (Cont)	(Replace opcon if [TST] lamp does not stay lit when keys are released.)	Simultaneously depress the [RETURN] and [ESC P] keys fully to extinguish lamp (if no test is required).	Replace opcon.
13.	Is +12 V dc (pin 7) and -12 V dc (pin 8) present with respect to frame ground (pin 9) on interface connector (P1) of logic cabinet? 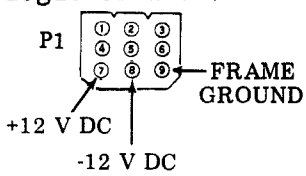	Check interface/bell card cable and connector. Check for +12 V dc (pin A12) and -12 V dc (pin A7) of interface/bell card to console logic card connector. Replace the 410055 interface/bell card. Go to 16.	Proper voltage not being supplied to the opcon. Check cable to opcon. Go to 1. 40PSU101 POWER SUPPLY (Page 4-31).
14.	Does failing key fail to light in [TST] mode? See Local Loop-Back Test (Page 4-48).	Go to 16.	Refer to 5. CONTROLLER FOR 40/1 (Page 4-54), 6. CONTROLLER FOR 40/2 (Page 4-60), and 7. CONTROLLER FOR 40/3 (Page 4-65).
15.	Does failing key check good in [TST] mode? See Local Loop-Back Test (Page 4-48).	If key does not fail to operate in test mode, refer to 5. CONTROLLER FOR 40/1 (Page 4-54), 6. CONTROLLER FOR 40/2 (Page 4-60), and 7. CONTROLLER FOR 40/3 (Page 4-65). If key fails to operate in test mode: Replace keyswitch. Replace opcon.	Check for short between keyswitch terminals. Replace keyswitch. Replace opcon.

D. COMPONENT ACCESS (Cont)

3. OPERATOR CONSOLE (OPCON) (Cont)

ANALYSIS QUESTION	"YES" RESPONSE DIRECTIVE	"NO" RESPONSE DIRECTIVE
16. Is +24 V dc present at pins 3 and 4 of indicator keyswitch or TST indicator terminals when lamp should be lit? 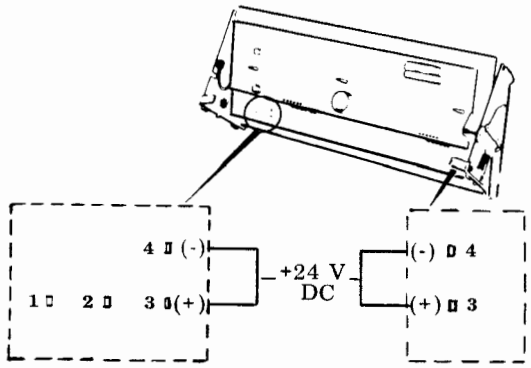 Terminal Side of Indicator Keyswitch — Test Indicator	Replace indicator keyswitch or TST indicator with defective indicator lamp.	Replace opcon.
17. Do any indicators light?	Go to 18.	Check for open in ground lead.
18. Does the IN SERVICE indicator light when power is turned ON? (Cabinet lid closed and no paper alarm.) Depress IN SERVICE key on earlier sets.	Go to 21.	Go to 19.
19. Is approximately +12 V dc present at pins 1, 3, 5, or 7 with respect to frame ground (pin 9) when INTRPT, TRANS START, IN SERVICE, or DATA ERROR lamps should be lit?	Check wiring to failing keyswitch indicator. Replace keyswitch.	Go to 20.

ANALYSIS QUESTION		"YES" RESPONSE DIRECTIVE	"NO" RESPONSE DIRECTIVE
19. (Cont)	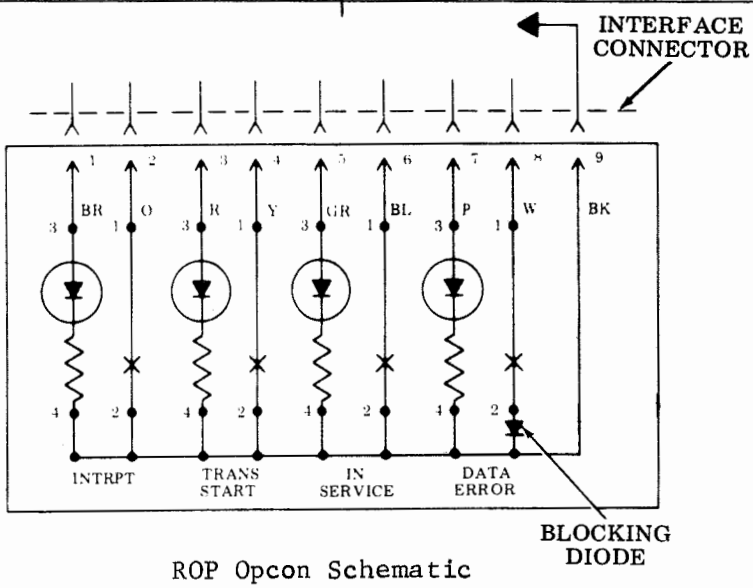 ROP Opcon Schematic		
20.	Is +12 V dc present when associated keyswitch is removed? (See ROP Opcon Schematic as shown above.)	Replace shorted keyswitch.	Check for short in wiring across keyswitch.
21.	Does test message print when TRANS START key is depressed?	Go to 22.	Check wiring to keyswitch terminals. Replace open keyswitch. Refer to 8. 40C103 ROP CONTROLLER (Page 4-67).
22.	Does TRANS START lamp light?	Go to 23.	Go to 19.
23.	When receiving carrier in data mode (with INTRPT off), does depressing INTRPT key turn on lamp?	Go to 24.	Check wiring to keyswitch. Replace open keyswitch. Refer to 8. 40C103 ROP CONTROLLER (Page 4-67).
24.	Does DATA ERROR lamp light on receipt of parity error? (Option 25. c. enabled.)	Go to 25.	Go to 19.

D. COMPONENT ANALYSIS (Cont)

3. OPERATOR CONSOLE (OPCON) (Cont)

ANALYSIS QUESTION	"YES" RESPONSE DIRECTIVE	"NO" RESPONSE DIRECTIVE
25. Does depressing DATA ERROR key extinguish lamp?	Place in service.	Check wiring to key-switch terminals. Replace open diode on keyswitch. Refer to 8. 40C103 ROP CONTROLLER (Page 4-67).

Local Loop-Back Test

Simultaneously depress the RETURN and " ' keys with more force than normally required.

Response:

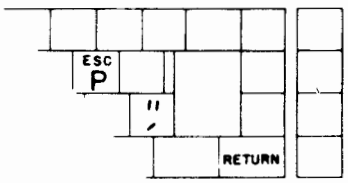

NOTE: Occasionally the operational lamps may flash on then off, or the alarm bell may sound when the loop-back test mode is activated. If this occurs,

clear the test by depressing the RETURN and ESC P keys beyond their normal stop and re-enter test mode.

Any of the following keys or functions may be tested by depressing the keys and observing lights for proper indication.

Loop-Back Test is to be performed in ALL CAPS mode.

(Loop-Back Test continued on next page.)

Response:

Depress Keys	Function	Indicator Condition
A	SEND	ON
CONTROL & A	SEND	OFF
C	REC	ON
CONTROL & C	REC	OFF
D	LOCAL	ON
CONTROL & D	LOCAL	OFF
G	S/R	ON
CONTROL & G	S/R	OFF
F	INTRPT	ON
CONTROL & ACK	INTRPT	OFF
E	FORM SEND	ON
CONTROL & E	FORM SEND	OFF
J	PRINT ON LINE	ON
NEW LINE	PRINT ON LINE	OFF
O	PRINT LOCAL	ON
CONTROL & O	PRINT LOCAL	OFF
I	HIGH LIGHT	ON
TAB	HIGH LIGHT	OFF
H	FORM ENTER	ON
←	FORM ENTER	OFF
→	REC	≥FLASH≤
CONTROL & C	REC	OFF
CURSR RETRN	S/R	≥FLASH≤
CONTROL & G	S/R	OFF
CLEAR	PRINT ON LINE	≥FLASH≤
NEW LINE	PRINT ON LINE	OFF
HOME	FORM ENTER	≥FLASH≤
←	FORM ENTER	OFF

Simultaneously depress the [RETURN] and [ESC P] keys fully.

Response: The [TST] lamp extinguishes and returns opcon to normal operating mode.

NOTE: If any blocking keytops are removed to perform this test, make sure keytop is orientated properly when reinstalling them.

D. COMPONENT ANALYSIS (Cont)

4. DISPLAY LOGIC

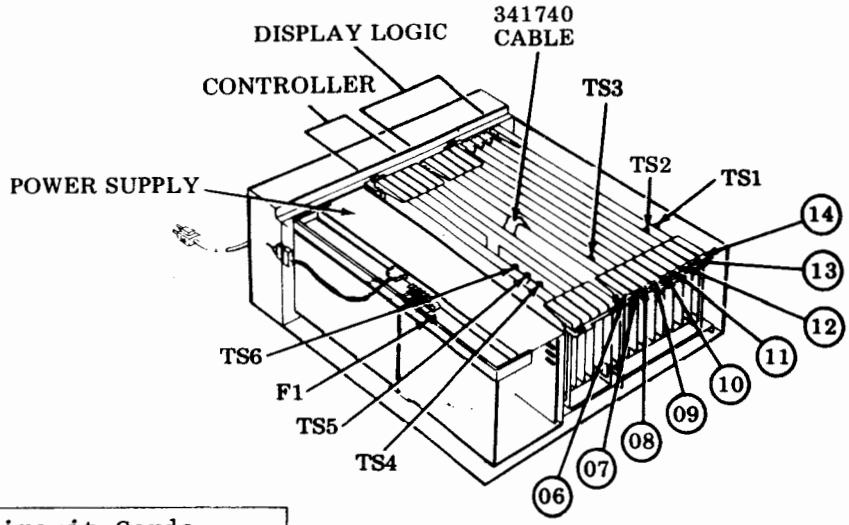

Display Logic Circuit Cards	
Pos.	
06	410002
07	410001
08	410003
09	AUX
10	Segment No. 1 (See Note 1.)
11	Segment No. 2 (See Note 1.)
12	Segment No. 3 (See Note 1.)
13	410657, 410020, 410021, 410022
14	410855
Wired Frame	341672 (See Note 2.)

NOTE 1: Sets with full editing features, use 410005 circuit card. Sets without full editing features, use 410004 circuit card. For 1 segment (24 lines) card is in position 10. For 2 segments (48 lines) cards are in positions 10 and 11. For 3 segments (72 lines) cards are in positions 10, 11, and 12.

NOTE 2: If trouble is not cleared after replacing all components listed, check or replace wired frame.

ANALYSIS QUESTION	"YES" RESPONSE DIRECTIVE	"NO" RESPONSE DIRECTIVE
1. Depress TS1 test switch on 410855 circuit card. Is the following pattern generated on the display? Are all of the elements shown in enlarged view I and II present?	Go to 2.	Replace 410855 circuit card.

ANALYSIS QUESTION	"YES" RESPONSE DIRECTIVE	"NO" RESPONSE DIRECTIVE
1. (Cont) 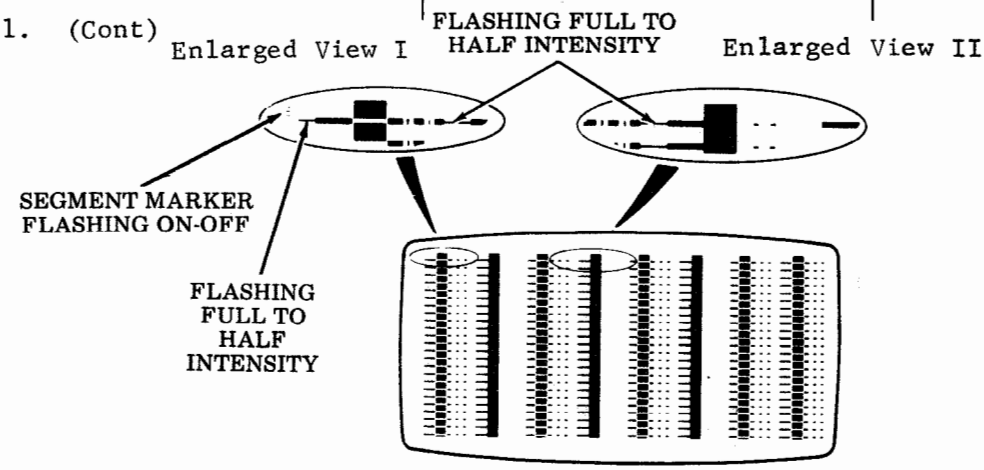 TS1 Test Pattern		
2. Depress TS2 test switch on 410657, 410020, 410021, or 410022 circuit card. Is the U* (or *U) pattern, with protected and highlighted elements as indicated below, generated across all lines of the display? 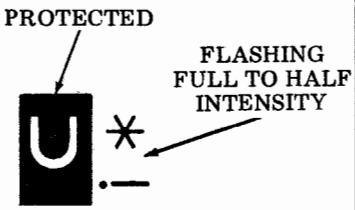 TS2 Test Pattern (Generated across all lines of the display.)	Go to 3.	Replace 410657, 410020, 410021, or 410022 circuit card.
3. Depress and hold down TS3 test switch on 410001 circuit card. Is the * character generated across all lines of the display in all character positions? Also check segments 2 and 3 (if present) by scrolling.	If data appears on screen that is not sent from OPCON: Replace 410004 or 410005 circuit card for segment affected. Replace 410002 circuit card. Go to 8.	Go to 4.

D. COMPONENT ANALYSIS (Cont)

4. DISPLAY LOGIC (Cont)

ANALYSIS QUESTION	"YES" RESPONSE DIRECTIVE	"NO" RESPONSE DIRECTIVE
4. With TS3 depressed, is a black and white bar pattern generated on the display with bars that are 4 character positions wide as shown below? 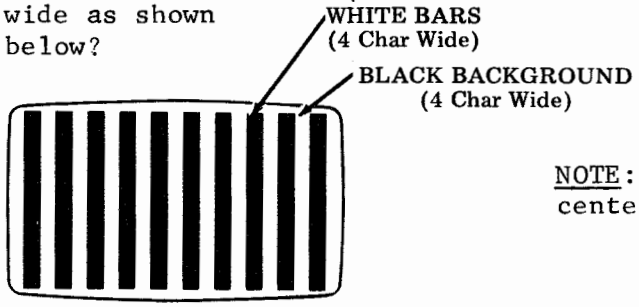 TS3 Test Pattern	Go to 5.	Go to 6.
5. Remove 341740 cable. Depress TS3. Is the test pattern from Question 4 still generated on the display?	Replace 410002 circuit card.	Trouble is in controller. Go to 5. CONTROLLER FOR 40/1 (Page 4-54), 6. CONTROLLER FOR 40/2 (Page 4-60), and 7. CONTROLLER FOR 40/3 (Page 4-65).
6. With TS3 depressed, is a black and white bar pattern generated on the display with white bars 4 character positions wide and black bars 12 character positions wide as shown below? 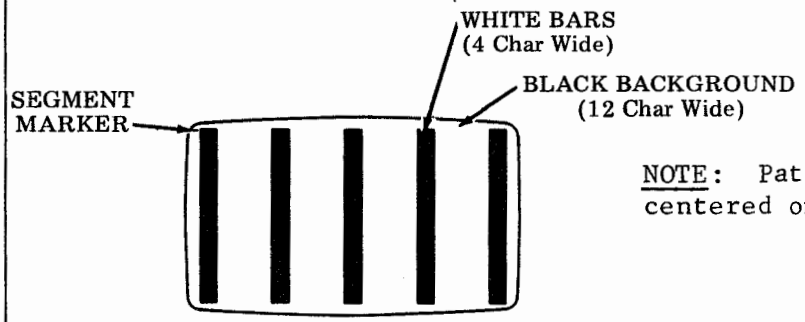 TS3 Test Pattern	Replace 410004 or 410005 circuit card for the segment indicated by the segment marker displayed in the test pattern.	Go to 7.

NOTE: Pattern is not necessarily centered on the display as illustrated.

NOTE: Pattern is not necessarily centered on the display as illustrated.

ANALYSIS QUESTION	"YES" RESPONSE DIRECTIVE	"NO" RESPONSE DIRECTIVE
7. With TS3 depressed, is a black and white bar pattern generated on the display with bars that are 8 character positions wide as shown below? 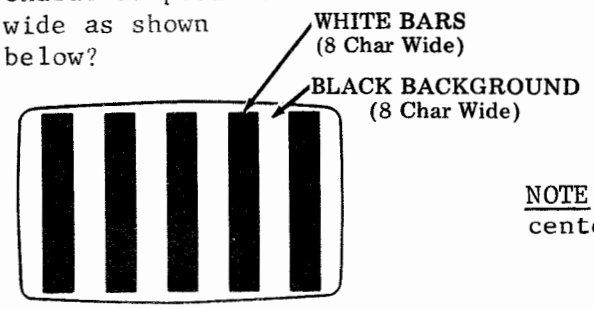 TS3 Test Pattern	Replace 410003 circuit card.	Replace 410001 circuit card.
	NOTE: Pattern is not necessarily centered on the display as illustrated.	
8. With TS3 depressed, does the cursor and first segment marker come to rest in a stationary condition at the HOME position?	Display logic is good. Trouble is elsewhere.	Replace 410003 circuit card.

D. COMPONENT ANALYSIS (Cont)

5. CONTROLLER FOR 40/1 APPLICATIONS

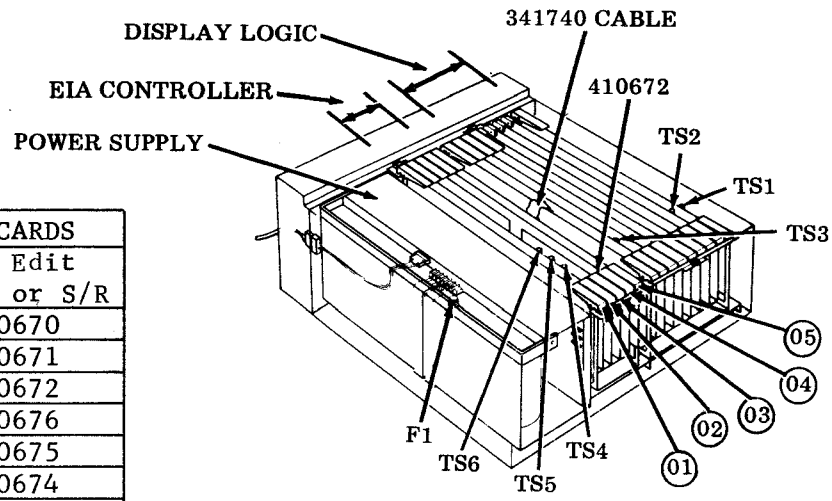

EIA CONTROLLER CIRCUIT CARDS		
Pos	Basic Edit W/PTR or S/R	Full Edit W/PTR or S/R
01		410670
02	410671	410671
03	410672	410672
03		410676
04	410670	410675
05	410669	410674
Wired Frame	341907	341909

NOTE: If trouble is not cleared after replacing all components listed, check or replace wired frame.

ANALYSIS QUESTION	"YES" RESPONSE DIRECTIVE	"NO" RESPONSE DIRECTIVE
1. Does the terminal have a Basic Edit EIA controller?	Go to 2. (Basic Edit)	Go to 14. (Full Edit)
2. Can anything be entered from the opcon onto the display?	Go to 4.	Go to 3.
3. Depress TS4 test switch on 410671 circuit card. Are any characters generated on the display?	Go to 4.	Replace 410669 circuit card. Replace 410671 circuit card. Check 341740 cable (controller/display logic).
4. Can characters be entered from the opcon and displayed properly (local mode)?	Go to 5.	Replace 410672 circuit card. Replace 410669 circuit card. Go to 3. OPERATOR CONSOLE (OPCON) (Page 4-42).

ANALYSIS QUESTION	"YES" RESPONSE DIRECTIVE	"NO" RESPONSE DIRECTIVE
5. Do mode selection and editing features operate properly?	Go to 6.	Replace 410669 circuit card. Replace 410672 circuit card. Go to 3. OPERATOR CONSOLE (OPCON) (Page 4-42).
6. Can the terminal send and receive properly on line?	Go to 11.	Go to 7.
7. Enter U*U* pattern across the first line of display. Home the cursor, depress the REC key on the opcon, and place the data set in the data mode. Depress TS5 test switch on 410671 circuit card. Does the cursor move across the line?	Go to 9.	Go to 8.
8. Enter U*U* pattern across the first line of display. Home the cursor, and depress the REC key on the opcon. Depress TS6 test switch on 410671 circuit card. Are the *s changed to Us as the cursor moves across the line?	Check data set and interface cable (341896).	Replace 410671 circuit card. Replace 410669 circuit card.
9. Were the *s changed to Us as the cursor moved across the line?	Go to 10.	Replace 410671 circuit card. Replace 410669 circuit card.

D. COMPONENT ANALYSIS (Cont)

5. CONTROLLER FOR 40/1 APPLICATIONS (Cont)

ANALYSIS QUESTION	"YES" RESPONSE DIRECTIVE	"NO" RESPONSE DIRECTIVE
10. Enter *U*U pattern across the first line of display. Home the cursor, depress the REC key on the opcon, and place the data set in the data mode. Depress TS5 test switch on 410671 circuit card. Are the Us changed to *s as the cursor moves across the line?	Check data set and transmission lines.	Replace 410671 circuit card. Replace 410669 circuit card.
11. Does the terminal have a printer?	Go to 12.	Go to 13.
12. Does the printer receive properly in response to PRINT LOCAL and PRINT ON LINE?	Go to 13.	Replace 410670 circuit card. Go to 8. 40C103 ROP CONTROLLER (Page 4-67). Go to 9. PRINTER (Page 4-70).
13. Does the send/receive mode operate properly?	Controller is good. Trouble is elsewhere.	Replace 410670 circuit card. Replace 410669 circuit card.
14. Can anything be entered from the opcon onto the display?	Go to 16.	Go to 15.
15. Depress TS4 test switch on 410671. Is a ? or S_B character generated on the display?	Replace 410672 circuit card. Replace 410675 circuit card.	Replace 410675 circuit card. Replace 410674 circuit card.

ANALYSIS QUESTION	"YES" RESPONSE DIRECTIVE	"NO" RESPONSE DIRECTIVE
15. (Cont)	Go to 3. OPERATOR CONSOLE (OPCON) (Page 4-42).	Replace 410002 circuit card in the display logic. Replace 341740 cable (controller/display logic).
16. Can characters be entered from the opcon and displayed properly (local mode)?	Go to 17.	Replace 410672 circuit card. Replace 410674 circuit card. Replace 410002 circuit card in the display logic. Replace 341740 cable (controller/display logic). Go to 3. OPERATOR CONSOLE (OPCON) (Page 4-42).
17. Do mode selection, editing, and alarm features operate properly?	Go to 18.	Replace 410675 circuit card. Replace 410672 circuit card. Replace 410674 circuit card. Replace 410002 circuit card in the display logic. Replace 341740 cable (controller/display logic). Go to 3. OPERATOR CONSOLE (OPCON) (Page 4-42).
18. Can the terminal send and receive properly on line?	Go to 23.	Go to 19.

D. COMPONENT ANALYSIS (Cont)

5. CONTROLLER FOR 40/1 APPLICATIONS (Cont)

ANALYSIS QUESTION	"YES" RESPONSE DIRECTIVE	"NO" RESPONSE DIRECTIVE
19. Enter U*U* pattern across the first line of display. Home the cursor, depress the REC key on the opcon, and place the data set in the data mode. Depress TS5 test switch on 410671 circuit card. Does the cursor move across the line?	Go to 21.	Go to 20.
20. Enter U*U* pattern across the first line of display. Home the cursor, and depress the REC key on the opcon. Depress TS6 test switch on the 410671 circuit card. Are the *s changed to Us as the cursor moves across the line?	Check data set and interface cable (341896).	Replace 410671 circuit card. Replace 410674 circuit card. Replace 410675 circuit card.
21. Were the *s changed to Us as the cursor moved across the line?	Go to 22.	Replace 410671 circuit card. Replace 410674 circuit card.
22. Enter *U*U pattern across the first line of display. Home the cursor, depress the REC key on the opcon, and place the data set in the data mode.	Check data set and transmission lines.	Replace 410671 circuit card. Replace 410674 circuit card.

ANALYSIS QUESTION	"YES" RESPONSE DIRECTIVE	"NO" RESPONSE DIRECTIVE
22. (Cont) Depress TS5 test switch on 410671 circuit card. Are the Us changed to *s as the cursor moves across the line?		
23. Does the set respond properly to control characters and sequences?	Go to 24.	Replace 410674 circuit card. Replace 410675 circuit card. Replace 410670 circuit card (if equipped).
24. Are proper escape sequences sent on line?	Go to 25.	Replace 410676 circuit card. Replace 410675 circuit card. Replace 410674 circuit card. Replace 410002 circuit card in the display logic.
25. Are the proper line ending sequences (LF, CR LF, or CR CR LF) sent on line?	Go to 26.	Replace 410675 circuit card. Replace 410674 circuit card.
26. Does the send/receive mode operate properly?	Go to 27.	Replace 410670 circuit card. Replace 410674 circuit card.
27. Does the printer receive properly in response to PRINT LOCAL and PRINT ON LINE?	EIA controller is good. Trouble is elsewhere.	Replace 410670 circuit card. Replace 410674 circuit card. Go to 8. 40C103 ROP CONTROLLER (Page 4-67). Go to 9. PRINTER (Page 4-70).

D. COMPONENT ANALYSIS (Cont)

6. CONTROLLER FOR 40/2 APPLICATIONS

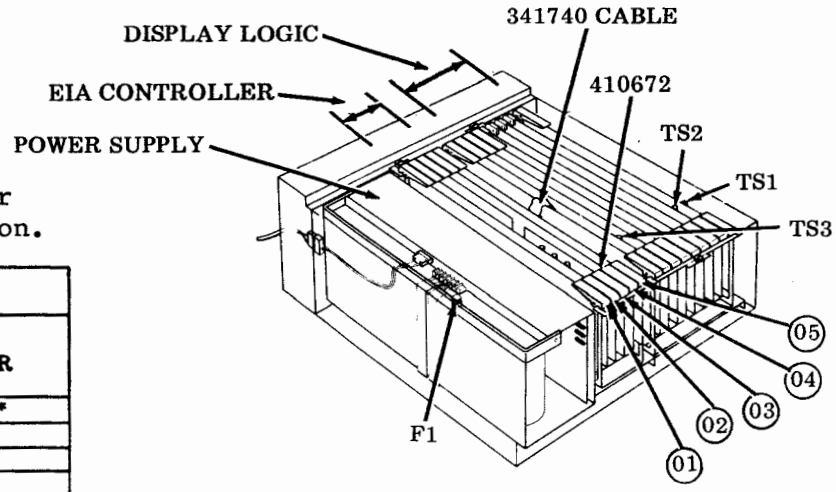

*410770 required for KDP or S/R operation.

Controller Circuit Cards	
Pos	**Full Edit W/P or S/R**
01	410770*
02	410679
03	410672
03	410676
04	410675
05	410674
Wired Frame	402176

NOTE: If trouble is not cleared after replacing all components listed, check or replace wired frame.

ANALYSIS QUESTION	"YES" RESPONSE DIRECTIVE	"NO" RESPONSE DIRECTIVE
1. Can characters be entered from the opcon to the display in the local mode?	Go to 2.	Refer to 3. OPERATOR CONSOLE (OPCON) (Page 4-42). Replace 410672 circuit card. Replace 410674 circuit card. Replace 410675 circuit card.
2. Can the characacters be entered and displayed properly?	Go to 3.	Replace 410672 circuit card. Replace 410674 circuit card. Replace 410002 circuit card. Check 341740 display logic interface cable.

ANALYSIS QUESTION	"YES" RESPONSE DIRECTIVE	"NO" RESPONSE DIRECTIVE
3. Do any keys fail to light on the opcon when depressed?	Replace 410672 circuit card. Go to 3. OPERATOR CONSOLE (OPCON) (Page 4-42).	Go to 4.
4. Do all mode selection and editing features operate properly (ie send lamp lights with 202 modem and HDX)? (Refer to Mode Charts, Page 4-63).	Go to 5.	Replace 410672 circuit card. Replace 410674 circuit card. Replace 410675 circuit card. Replace 410679 circuit card. Check CTS lead (pin 5) of EIA interface for "on" condition with data set in data mode, station in send mode. Replace 410002 circuit card. Go to 3. OPERATOR CONSOLE (OPCON) (Page 4-42).
5. Can the station send and receive properly on line?	Go to 8.	Check data set, 341896 data set cable or transmission line facilities. Go to 6.
6. With the 410676 circuit card removed, is the station able to send properly -- excluding Send Variations (Option 13.) responses?	Replace 410676 circuit card.	Replace 410679 circuit card. Replace 410675 circuit card. Replace 410674 circuit card. Replace 410002 circuit card. Go to 4. DISPLAY LOGIC (Page 4-50). Go to 7.

D. COMPONENT ANALYSIS (Cont)

6. CONTROLLER FOR 40/2 APPLICATIONS (Cont)

ANALYSIS QUESTION	"YES" RESPONSE DIRECTIVE	"NO" RESPONSE DIRECTIVE
7. Does the station respond properly to control characters and sequences?	Go to 8.	Replace 410674 circuit card. Replace 410675 circuit card. Replace 410770 circuit card.
8. Does the terminal have a printer?	Enter U*U* across the first two lines of the display. Go to 9.	Go to 10.
9. Does the terminal respond properly to the PRINT LOCAL function and the PRINT ON LINE function?	Go to 10.	Replace 410770 circuit card. Replace 410674 circuit card. Replace 410679 circuit card. Go to 7. KD OR KDP CONTROLLER FOR 40/3 APPLICATIONS (Page 4-65).
10. Can the proper escape sequences be sent on line? (Refer to Mode Charts, Page 4-63).	Go to 11.	Replace 410676 circuit card. Replace 410675 circuit card. Replace 410674 circuit card. Replace 410002 circuit card.
11. Are the proper line ending sequences (LF, CR LF, CR CR LF) sent on line?	Go to 12.	Replace 410675 circuit card. Replace 410674 circuit card.

ANALYSIS QUESTION	"YES" RESPONSE DIRECTIVE	"NO" RESPONSE DIRECTIVE
12. Does the S/R mode operate properly?	Controller is good. Trouble is elsewhere.	Replace 410679 circuit card. Replace 410674 circuit card. Replace 410770 circuit card.

Mode Charts (Showing Operation With Typical Modem)

Example 1

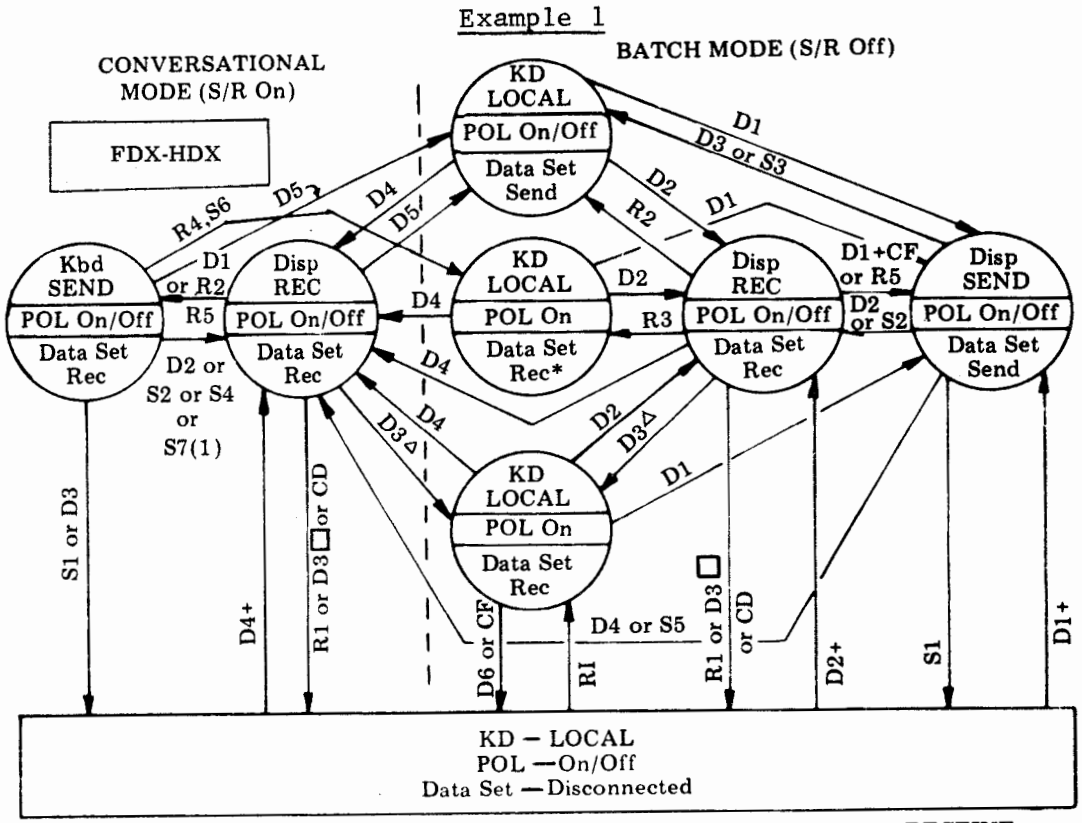

DEPRESS		SEND		RECEIVE	
D1	SEND key	S1	DLE EOT	R1	DLE EOT
D2	REC key	S2	EOT	R2	EOT
D3	LOCAL key	S3	ETX or GS or FF	R3	ETX or GS or FF
D4	S/R key (on)	S4	CR (1)	R4	DLE ETX, FF, GS
D5	S/R key (off)	S5	DC3	R5	ESCf (1)
D6	INTRPT key (on) or PRINT ON LINE key (off) (DC4)	S6	DLE ETX, GS, FF		
		S7	RETURN (←) (1)		

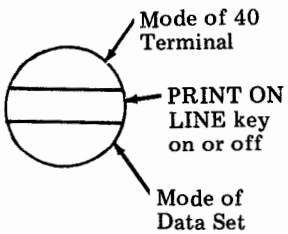

(1) — Applies to Issue 4B and later 410674 circuit card.
* — STD off.
RI — Detection of ring indicator from the data set with PRINT LOCAL off, INTRPT off and KD in LOCAL.
CD — No carrier detected for 45 seconds.
↗ — Change in mode.
\+ — Then make connection or auto-answer.
△ — If PRINT ON LINE is on.
□ — If PRINT ON LINE is off.

D. COMPONENT ANALYSIS (Cont)

6. CONTROLLER FOR 40/2 APPLICATIONS, Mode Charts (Showing Operation With Typical Modem) (Cont)

Example 2

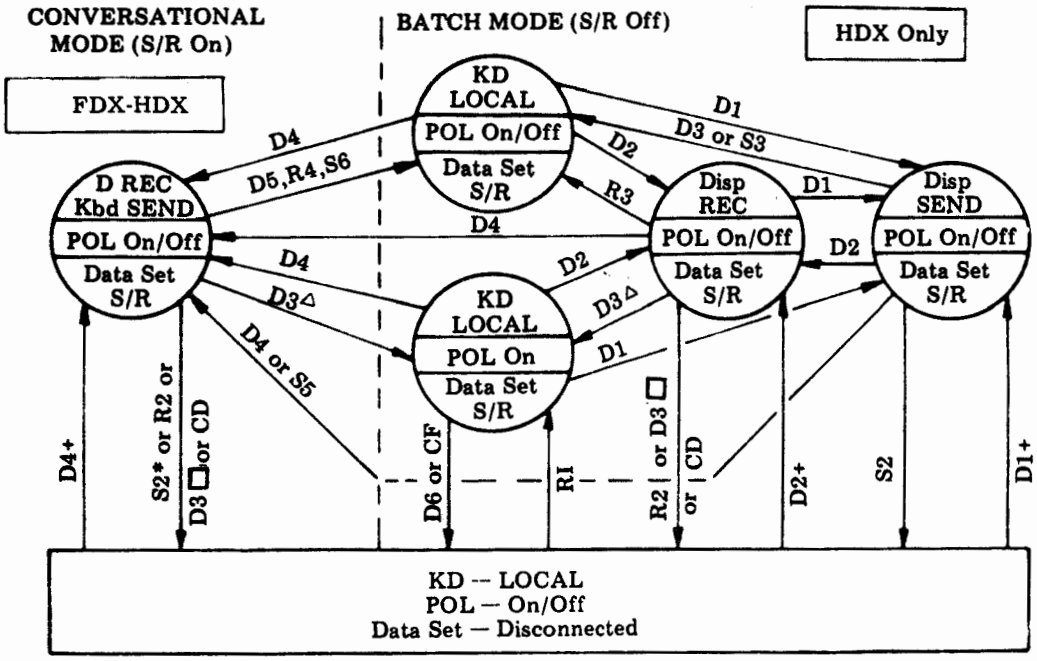

DEPRESS

D1 SEND key
D2 REC key
D3 LOCAL key
D4 S/R key (on)
D5 S/R key (off)
D6 INTRPT key (on) or PRINT ON LINE key (off) (DC4)

SEND

S1 DLE EOT
S2 EOT
S3 ETX or GS or FF
S4 CR (1)
S5 DC3
S6 DLE ETX, FF, GS (HDX, or Echoplex Only)

RECEIVE

R1 DLE EOT
R2 EOT
R3 ETX or GS or FF
R4 DLE ETX, FF, GS

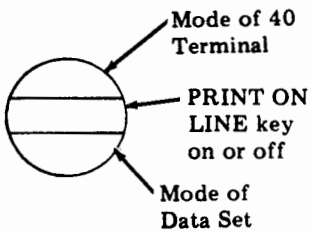

(1) — Applies to Issue 4B and later 410674 Circuit Card.
* — HDX Only
RI — Detection of ring indicator from the data set with PRINT LOCAL off, INTRPT off and KD in LOCAL.
CD — No carrier detected for 45 seconds.
↗ — Change in mode.
\+ — Then make connection or auto-answer.
△ — If PRINT ON LINE is on.
□ — If PRINT ON LINE is off.

7. KD OR KDP CONTROLLER FOR 40/3 APPLICATIONS

NOTE: DL refers to Display Logic.

ANALYSIS QUESTION	"YES" RESPONSE DIRECTIVE	"NO" RESPONSE DIRECTIVE
1. Can anything be entered from opcon onto the display?	Go to 3.	Go to 2.
2. Depress TS4 test switch on 410771 circuit card. Is "?" (Model 40 Option 7.a.) or "S_B" (Model 40 Option 7.b.) displayed on the monitor?	Replace 410672 circuit card. Replace 410675 circuit card. Replace opcon.	Replace 410675 circuit card. Replace 410674 circuit card. Replace 410002 circuit card in DL. Replace 341740 cable to DL.
3. Can characters be entered from opcon (in local mode) and displayed properly?	Go to 4.	Replace 410672 circuit card. Replace 410674 circuit card. Replace 410002 circuit card in DL. Replace 341740 cable to DL. Replace opcon.
4. Do edit and alarm features operate properly in local mode? NOTE: Refer to D. COMPLETE OFF-LINE CHECKOUT -- KD AND KDP TERMINALS (Page 3-6).	Go to 5.	Replace 410675 circuit card. Replace 410672 circuit card. Replace 410674 circuit card. Replace 410002 circuit card in DL. Replace 341740 cable to DL. Replace opcon.

D. COMPONENT ANALYSIS (Cont)

7. KD OR KDP CONTROLLER FOR 40/3 APPLICATIONS (Cont)

ANALYSIS QUESTION	"YES" RESPONSE DIRECTIVE	"NO" RESPONSE DIRECTIVE
5. Can set send and receive properly on line?	Go to 7.	Go to 6.
6. Enter the sequence U*U* across the first line. With cursor in home position and REC key lighted, depress TS6 test switch on 410771 circuit card. Does cursor move across line and *s change to Us? (SEND and REC key lights flash on and off while TS6 test switch is depressed.)	Check 9140 Station Controller and cable between Model 40 and 9140 Station Controller using C. TERMINAL ANALYSIS FOR 40/3 (Page 4-9).	Replace 410771 circuit card. Replace 410674 circuit card. Replace 410675 circuit card.
7. Does set respond properly to control characters and sequences? (Example: VT and EOT.)	Go to 8.	Replace 410674 circuit card. Replace 410675 circuit card.
8. Can proper escape sequence be sent on line? (Example: ESC3 for high-light, ESC4 for no highlight.)	Go to 9.	Replace 410676 circuit card. Replace 410675 circuit card. Replace 410674 circuit card. Replace 410002 circuit card in DL.

ANALYSIS QUESTION	"YES" RESPONSE DIRECTIVE	"NO" RESPONSE DIRECTIVE
9. With ≡ displayed on monitor, can proper line ending sequence (LF, CR LF, CR CR LF) be sent on line? (The sequence is dependent on the Model 40 Option 10 chosen.)	Go to 10.	Replace 410675 circuit card. Replace 410674 circuit card.
10. KDP, KD-ROP and KDP portion of KDP and ROP only: Do the PRINT ON LINE and PRINT LOCAL operations function properly? (Question 10. does not apply to KD and ROP; Note of Question 4. applies.)	Go back to C. TERMINAL ANALYSIS FOR 40/3 (Page 4-9).	Check option on 410770 card; 1B required for KDP; 1A required for KD-ROP. Replace 410770 circuit card. Replace 410674 circuit card. KD-ROP only: go to 8. 40C103 ROP CONTROLLER (Page 4-67). KDP only: Replace printer.

8. 40C103 ROP CONTROLLER

NOTE 1: 40C103/AD ROP controller includes a buffer (character storage).

NOTE 2: 40C103/AE ROP controller does not include a buffer.

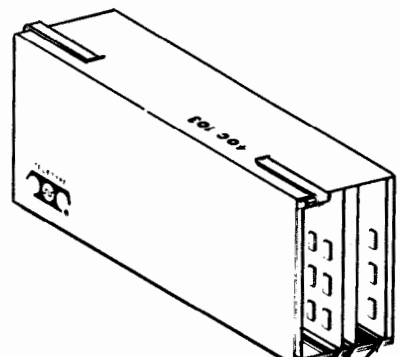

CIRCUIT CARD LOCATION

40C103/AD	40C103/AE	POSITION
410582	410582	JA
410581 or 410585	410587	JB
410580	410580	JC
410583	410583	JD

410581 and 410585 are interchangeable.

D. COMPONENT ANALYSIS (Cont)

8. 40C103 ROP CONTROLLER (Cont)

ANALYSIS QUESTION	"YES" RESPONSE DIRECTIVE	"NO" RESPONSE DIRECTIVE
1. Does IN SERVICE lamp on ROP opcon fail to light?	Replace 410580 circuit card.	Go to 2.
2. Is the correct test message printed when the TRANS START key on the ROP opcon is depressed, and does the TRANS START lamp turn ON?	Go to 3.	Replace 410583 circuit card. Replace 410582 circuit card. Replace 410580 circuit card.
3. Are messages received on line? (Are reverse channel and the interrupt feature operating properly?)	Go to 4.	Check data set and transmission line facilities. Replace 410580 circuit card. Replace 410582 circuit card.
4. Do messages received on line contain errors? (Does the DATA ERROR lamp, if used, remain OFF when errors are received, or turn ON when errors are not received?)	Replace 410580 circuit card. Replace 410582 circuit card. Replace 410584 circuit card (interconnecting).	If controller code is 40C103/AE, go to 5. If controller code is 40C103/AD, go to 6.
5. Does data stacking feature operate properly -- no loss of characters (40C103/AE)? NOTE: Data stacking prevents data loss by placing more characters on printed lines (no buffer).	ROP controller is OK. Trouble is elsewhere.	Check to see that controller has a 410587 circuit card in position JB, Issue 2 or later. Check to see that Option 38.a. on 410582 is enabled. Replace 410582 circuit card.

ANALYSIS QUESTION	"YES" RESPONSE DIRECTIVE	"NO" RESPONSE DIRECTIVE
6. Is the buffer (character storage) operating properly -- no lost characters or blocks of characters, no erroneous message termination, etc?	ROP controller is OK. Trouble is elsewhere.	Replace 410581 or 410585 circuit card. NOTE: These two cards are interchangeable. Replace 410580 circuit card. Replace 410582 circuit card.

D. COMPONENT ANALYSIS (Cont)

9. PRINTER

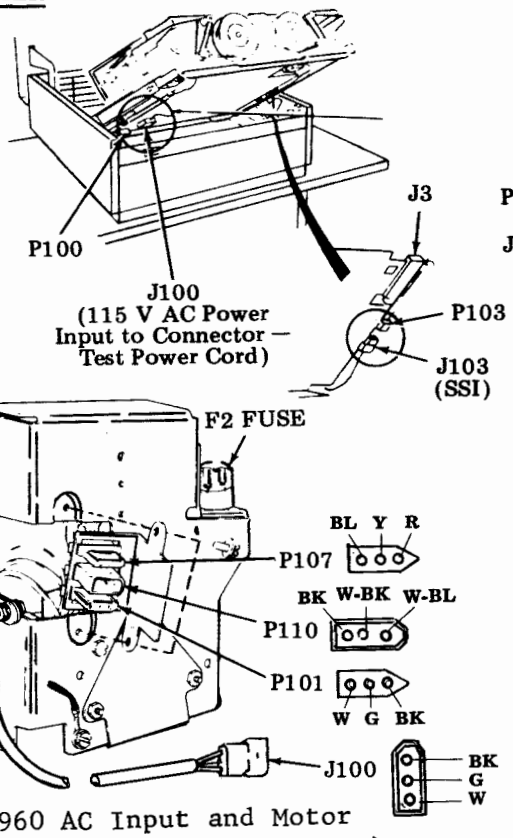

400960 AC Input and Motor Control Assembly (Late Design) (See Note 2)

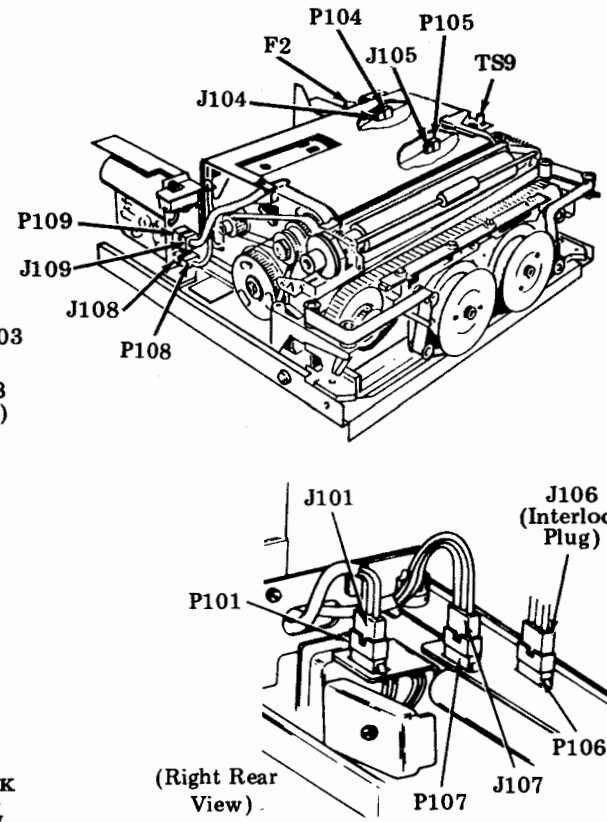

400905 AC Input and Motor Control Assembly (Early Design) (See Note 2)

NOTE 1: The following test apparatus is required to enable troubleshooting of the Model 40 printer. If it is not available, the recommended corrective procedure is replacement of the complete printer (return to authorized repair location) for all troubles which are not clearly evident and easily rectified.

80-Column		132-Column	
402617	Gauge	402716	Left Gauge
402779	AC Line Cord Adaptor (Friction Feed)	402717	Right Gauge
402780	Interlock Strapping Plug	402781	AC Line Cord Adaptor
402781	AC Line Cord Adaptor (Tractor Feed)	402782	Interlock Strapping Plug
402782	Interlock Strapping Plug (Tractor Feed)	402868	Gauge
402868	Gauge	408646	Printer Test Assembly
408646	Printer Test Assembly	408648	Test Cable
408649	Test Cable		

NOTE 2: Several motors and ac input and motor control assemblies have been used in friction feed printers.

CAUTION: MOTORS AND AC INPUT AND MOTOR CONTROL ASSEMBLIES ARE INTERCHANGEABLE. SEE PAGE 7-70.

NOTE 3: When the circuit cards (410640 for 80-column printer; 410729 for 132-column printer) are replaced, remake the Impeller Shaft Sensor and Flag Sensor adjustments.

NOTE 4: When the type carrier is replaced, it may be necessary to refine the phasing adjustments.

NOTE 5: F2 fuse: All Early Printers -- 2a fast-flow (120166)
All Late Printers -- 1a slow-blow, MDL1 (143306)

NOTE: For 80-column printers, begin with Analysis Question 1; for 132-column printers, begin with Analysis Question 63.

ANALYSIS QUESTION	"YES" RESPONSE DIRECTIVE	"NO" RESPONSE DIRECTIVE
1. Does the printer use paper with feed holes along both edges?	Go to 22 (tractor feed printer).	Go to 2 (friction feed printer).
2. Remove printer from cabinet (friction feed). Connect 402779 ac line cord adaptor to J100 on printer. Plug 402780 plug into P106 on printer. Set TS9 to OFF. Set line feed switch to LF-1. Operate 402779 ac line cord adaptor switch to ON. Does printer motor run?	Go to 3.	Go to 4.
3. Operate test cord switch to OFF position. Remove 410640 circuit card from printer. Operate ac line cord adaptor switch to ON. Does printer motor run?	Replace 400960 ac input and motor control assembly (see Note 2, Page 4-70).	*Replace 410640 circuit card. (Card which has been removed is defective.) (See Note 3, Page 4-70.)
4. Operate TS9 test switch on printer to ON. Does printer motor run?	Go to 38.	Go to 5.

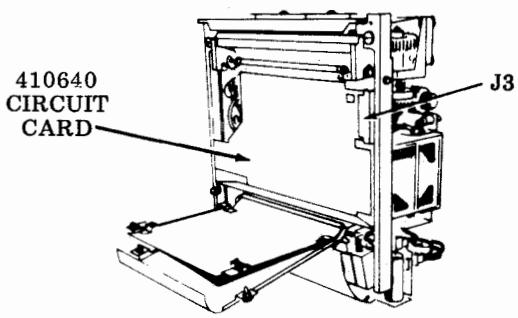

*CAUTION: WHEN 410640 IS REPLACED, FIRST CHECK VOLTAGES AT J3 BEFORE INSTALLING A NEW CARD. VOLTAGE BETWEEN FRAME GROUND AND PINS 9 AND 12 ON J3 SHOULD BE -24 V DC ±0.5 V DC. IF VOLTAGE IS ABOVE -28 V DC GO TO QUESTION 15. OF THIS SECTION.

D. COMPONENT ANALYSIS (Cont)

9. PRINTER (Cont)

ANALYSIS QUESTION	"YES" RESPONSE DIRECTIVE	"NO" RESPONSE DIRECTIVE
5. Operate 402779 ac line cord adaptor switch to OFF. Are the motor gears and associated drive mechanisms free to operate (no mechanical binds)?	Check F2 fuse on printer. If blown, replace with 120166 fuse (2A). If fuse blows again, go to 6. Check thermal overload protector -- depress red button on fan end of motor. (Early design motors have overload protection which resets automatically upon cooling and do not have manual reset buttons.) Go to 11.	If mechanical bind is not clearly evident and easily rectified, replace entire printer.
6. Disconnect J101 connector. Replace F2 fuse (see Note 5, Page 4-70). Turn power on (operate 402779 ac line cord adaptor switch to ON). Does F2 fuse blow?	Go to 7.	Locate and clear the short circuit in 115 V ac circuits on the 400905 or 400960 ac input and motor control assembly. Replace the ac input and motor control assembly. (See Note 2, Page 4-70.)
7. Reconnect J101 connector. Disconnect P108 connector. Replace F2 fuse (see Note 5, Page 4-70). Turn power on. Does F2 fuse blow?	Go to 8.	Locate and clear short circuit in transformer (400901) cabling. Check if transformer is shorted to ground. Replace transformer.
8. Reconnect P108 connector. Disconnect J109 connector. Replace F2 fuse (see Note 5, Page 4-70). Turn power on. Does F2 fuse blow?	Go to 9.	Replace 410681 circuit card. Replace 400908 power supply assembly.

ANALYSIS QUESTION	"YES" RESPONSE DIRECTIVE	"NO" RESPONSE DIRECTIVE
9. Reconnect J109 connector. Disconnect J105 connector. Replace F2 fuse (see Note 5, Page 4-70). Turn power on. Does F2 fuse blow?	Go to 10.	Short circuited filter capacitor on cover assembly. Replace 400903 cover assembly.
10. Reconnect J105 connector. Remove 410640 circuit card. Replace F2 fuse (see Note 5, Page 4-70). Turn power on. Does F2 fuse blow?	Replace printer.	Replace 410640 circuit card with new part. (See Note 3, Page 4-70.)
11. Remove 410640 circuit card from printer. Plug 408646 test assembly into J3 connector. Operate MOTOR switch on 408646 test assembly to ON. Operate 402779 ac line cord adaptor switch to ON. Does printer motor run?	Replace 410640 circuit card with new card. (See Note 3, Page 4-70.)	Go to 12.
12. Disconnect J101 on the ac input and motor control assembly. Measure 115 V ac ±10% on connector P101 from terminal 1 to 3. Is 115 V ac present?	Reconnect J101. Go to 13.	Replace 400960 ac input and motor control assembly. (See Note 2, Page 4-70.)

D. COMPONENT ANALYSIS (Cont)

9. PRINTER (Cont)

ANALYSIS QUESTION	"YES" RESPONSE DIRECTIVE	"NO" RESPONSE DIRECTIVE
13. Disconnect P108 on the printer power supply. Measure 28 V ac ±10% on connector P108 from terminal 1 to 3. Is 28 V ac present?	Reconnect P108. Go to 14.	Replace 400901 transformer.
14. Disconnect J109 on the printer power supply. Measure -24 V dc ±10% (two places) on P109 from terminal 5 to 6 and from terminal 4 to 5. Is -24 V dc present (two places)?	Reconnect J109. Go to 15.	If voltage is present but not -24 V dc, refine adjustment (R4 resistor on 410681 circuit card). If adjustment cannot be made, replace transistor Q2 (318835) on the top cover assembly. If no voltage, replace 410681 circuit card.
15. Remove top cover assembly. Disconnect J105. Measure -24 V dc ±1/4 V (two places) on J105 from terminal 1 to 2 and from terminal 2 to 3. Is -24 V dc present (two places)?	Go to 16. 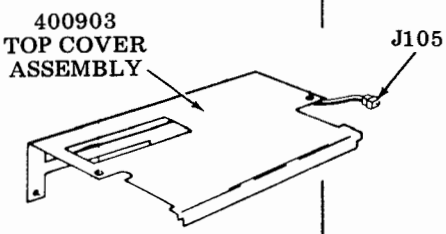 	Replace transistor Q2 (318835) on the cover assembly.
16. Measure -5 V dc ±5% on J105 from terminal 2 to 4. Is -5 V dc present?	Reconnect J105 and reassembly top cover assembly. Go to 17.	Replace 410681 circuit card. Replace 400903 cover assembly.

ANALYSIS QUESTION	"YES" RESPONSE DIRECTIVE	"NO" RESPONSE DIRECTIVE
17. Operate 402779 ac line cord adaptor switch to OFF. Remove 408646 test assembly from J3 connector. Set TS9 test switch to ON. Is continuity present on connector J3 from terminal 7 to 11?	If printer has 400960 or 402632 ac input and motor control assembly (intermediate or late design, respectively), go to 18. If printer has 400905 ac input and motor control assembly (early design), go to 20. (Refer to Note 2, Page 4-70.)	Check wiring back to TS9 test switch. Replace TS9 test switch (400560).
18. Replace 410154 test card into J3 connector. MOTOR switch on card is set to ON. Remove the 400960 ac input and motor control assembly mounting screws (3), and swing the assembly outward to expose relay terminals. TS9 test switch is on. Operate 402779 ac line cord adaptor switch to ON. Measure -24 V dc ±10% on K101 relay terminals 1 to 3. Is -24 V dc present?	Go to 19. 400960 or 402632 AC Input and Motor Control Assembly 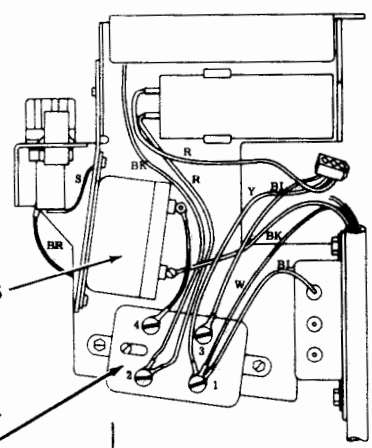 	Replace K101 relay (178306).
19. Measure 115 V ac ±10% on K100 relay terminals 1 to 3. Is 115 V ac present?	Replace 400960 or 402632 ac input and motor control assembly. Go to 21.	Replace K100 relay (402423 in 402632 or 402698 in 400960).

D. COMPONENT ANALYSIS (Cont)

9. PRINTER (Cont)

ANALYSIS QUESTION	"YES" RESPONSE DIRECTIVE	"NO" RESPONSE DIRECTIVE
20. Replace 408646 test assembly into J3 connector. MOTOR switch on card is set to ON. Remove relay cover. TS9 test switch is on. Operate 402779 ac line cord adaptor switch to ON. Measure -24 V dc ±1/4 V on the solid state relay from terminal 2 to 4 and 115 V ac ±10% from terminal 1 to 8. Are the -24 V dc and the 115 V ac voltages present?	Go to 21.	Install 402618 modification kit. (See Note 2, Page 4-70.) 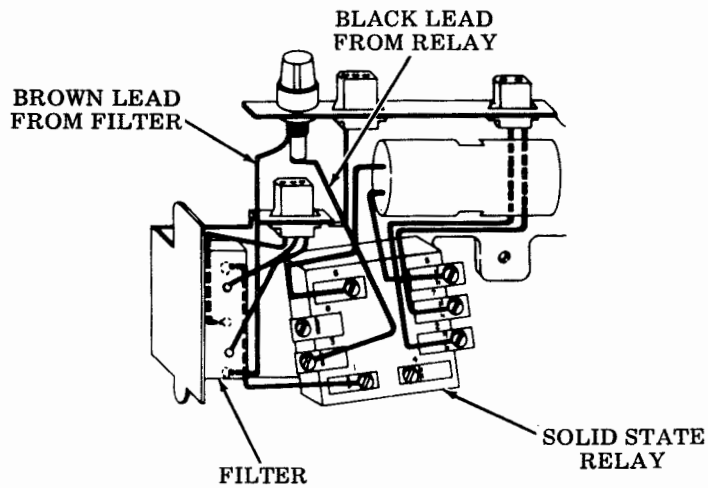
21. Operate 402779 ac line cord adaptor switch to OFF. Disconnect J107. Measure resistance of motor start windings (approximately 10 ohms) on J107 from terminal 1 to 2. Measure resistance of motor run windings (approximately 20 ohms) on J107 from terminal 2 to 3. Do both motor windings have proper resistance?	Replace entire printer unit.	Replace 402402 motor.

ANALYSIS QUESTION	"YES" RESPONSE DIRECTIVE	"NO" RESPONSE DIRECTIVE
22. Remove printer from cabinet (tractor feed). Connect 402781 ac line cord adaptor to J113 connector on printer. Plug 402782 plug into J114 on printer. Set TS9 test switch to OFF. Operate 402781 ac line cord adaptor switch to ON. Does printer motor run?	Go to 23.	Go to 27.
23. Operate 402782 ac line cord adaptor switch to OFF position. Remove 410640 circuit card from printer. Operate test cord switch to ON. Does printer motor run?	Go to 24.	Replace 410640 circuit card. (Card which has been removed is defective.) (See Note 3, Page 4-70.)
24. Dismantle 402620 power module from printer leaving all cabling connected. Operate 402781 ac line cord adaptor switch to ON. Measure -24 V dc ±10% on relay K101 from terminal 1 to 3. Is -24 V dc present?	Replace entire printer.	Go to 25.

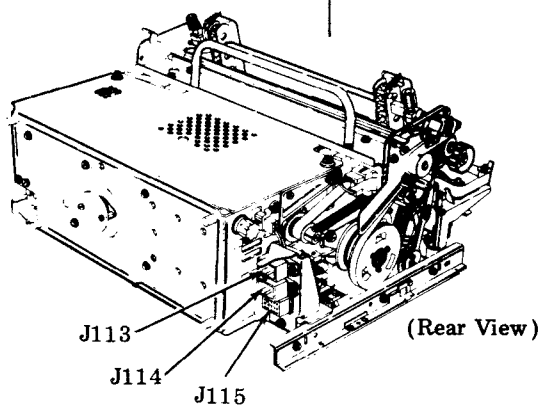

Tractor Feed Printer

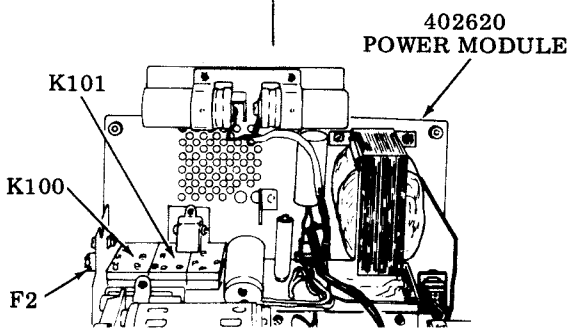

D. COMPONENT ANALYSIS (Cont)

9. PRINTER (Cont)

ANALYSIS QUESTION	"YES" RESPONSE DIRECTIVE	"NO" RESPONSE DIRECTIVE
25. Operate 402781 ac line cord adaptor switch to OFF. Measure resistance (approximately 12 ohms) between terminals 2 and 4 of relay K101. Is correct resistance present?	Go to 26.	Replace motor control relay K101 (178306).
26. Check for continuity between terminals 2 and 4 of relay K100. Is continuity present?	Replace motor start relay K100 (402423).	Replace entire printer.
27. Operate TS9 test switch to ON. Does printer motor run?	Go to 38.	Go to 28.
28. Operate 402781 ac line cord adaptor switch to OFF. Are the motor gears and associated drive mechanisms free to operate (no mechanical binds)?	Check F2 fuse on the printer (see Note 5, Page 4-70). If blown, replace fuse. If fuse blows again, go to 29. Check thermal overload protector -- depress red button on fan end of motor. Go to 33.	If mechanical bind is not clearly evident and easily rectified, replace entire printer.
29. Disconnect P112 connector. Replace F2 fuse (see Note 5, Page 4-70). Turn power on (operate test cord switch to ON). Does fuse F2 blow?	Problem is in cabinet wiring -- locate short. Replace F2 fuse.	Go to 30.

ANALYSIS QUESTION	"YES" RESPONSE DIRECTIVE	"NO" RESPONSE DIRECTIVE
30. Reconnect P112 connector. Disconnect J105 connector on the ac power module. Turn power on. Does F2 fuse blow?	Go to 32.	Go to 31.
31. Reconnect J105 connector. Remove 410640 circuit card. Turn power on. Does F2 fuse blow?	Replace printer (new unit).	Replace 410640 circuit card with new card. (See Note 3, 4-70.)
32. Reconnect J105 connector. Remove 410150* circuit card. Turn power on. Does F2 fuse blow?	Check for short circuit condition in the ac power module. Replace F2 fuse.	Replace 410150 circuit card. Replace transistor Q2 (318835 on the power module).
33. Remove 410640 circuit card from printer. Plug 408646 test assembly into J3 connector. Operate MOTOR switch on 408646 test assembly to ON. Operate 402781 ac line cord adaptor switch to on. Does printer motor run?	Replace 410640 circuit card with new card. (See Note 3, Page 4-70.)	Go to 34.
34. Measure -24 V dc ±10% at test point on the 408646 test assembly. Is -24 V dc present?	Go to 35.	If zero volts, replace 410150 circuit card. If voltage is between -18 V dc and -28 V dc, refine adjustment (R4 resistor on 410150 circuit card -- accessible through hole at rear of printer).

*Early units have 410681 circuit card.

D. COMPONENT ANALYSIS (Cont)

9. PRINTER (Cont)

ANALYSIS QUESTION	"YES" RESPONSE DIRECTIVE	"NO" RESPONSE DIRECTIVE
34. (Cont)		If voltage is out of adjustment range, replace transistor Q2 (318835) on the power module.
35. Dismantle 402620 power module from printer leaving all cabling connected. Operate 402781 ac line cord adaptor switch to ON. Measure 115 V ac ±10% at relay K101 from terminal 2 to 3. Is 115 V ac present?	Go to 36.	Replace motor control relay K101 (178306).
36. Measure 115 V ac ±10% between relay K100 terminal 2 and relay K101 terminal 3. Is 115 V ac present?	Go to 37.	Replace motor start relay K100 (402423).
37. Operate 402781 ac line cord adaptor switch to OFF. Disconnect J107 connector on cable running to the motor. Measure the following resistances between the indicated terminals on J107 connector: Terminal 1 to 2 -- 40 ohms. Terminal 1 to 3 -- 50 ohms Terminal 2 to 3 -- 13 ohms.		

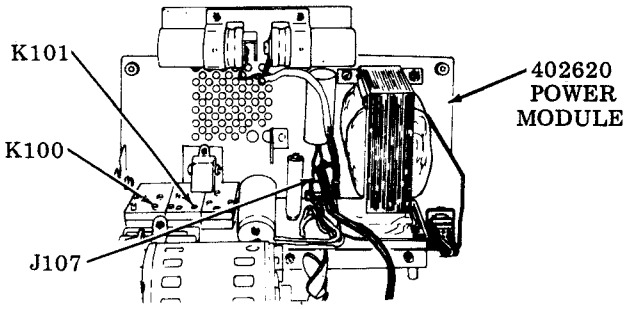

ANALYSIS QUESTION	"YES" RESPONSE DIRECTIVE	"NO" RESPONSE DIRECTIVE
37. (Cont) (All readings ±10%). Are measured resistances correct?	Replace printer.	Replace motor (402402).
38. Is the impeller shaft being driven?	Go to 39. 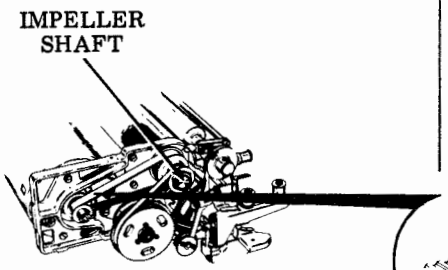 	Check the impeller shaft drive belt. Replace if worn or broken (400631). Check the motor shaft sprocket. Replace if worn or broken with 400280.
39. Does the printer line feed properly with TS9 test switch ON? Failure symptoms are: No line feed. Intermittent LF. Continuous LF.	Go to 41. 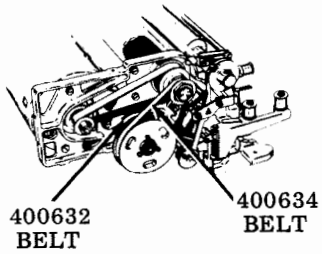 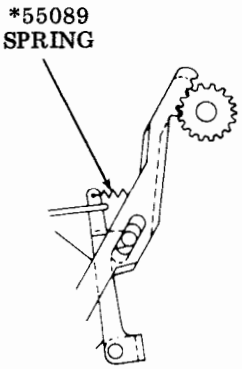 *Early design spring: 41385.	Check line feed belts (broken or missing), 400634 and 400632. Check line feed pawls for engagement with gear. Check 55089 spring and replace if broken or distorted. Check shock mounting (rubber insulator) of line feed mechanism (if present -- early design) for loosening of adhesive bonding. Check loose mounting of line feed magnet assembly on its core. Replace 400470 line feed magnet assembly if shock mount or magnet coil is loose. Go to 40.

D. COMPONENT ANALYSIS (Cont)

9. PRINTER (Cont)

ANALYSIS QUESTION	"YES" RESPONSE DIRECTIVE	"NO" RESPONSE DIRECTIVE
40. Remove 410640 circuit card from printer. Plug 408646 test assembly into J3 connector. Operate MOTOR switch on test assembly to ON. Operate 402781 ac line cord adaptor to ON position. Depress LF button on test assembly. Does the printer line feed?	Check for -24 V dc ±10% on the test assembly. Refine adjustment of R4 on 410150 circuit card if necessary. If voltage was low (-18 V dc to -22 V dc), install original 410640 circuit card, and recheck line feed operation. Replace 410640 circuit card. (See Note 3, Page 4-70.) (Rear View of Tractor Feed Printer) 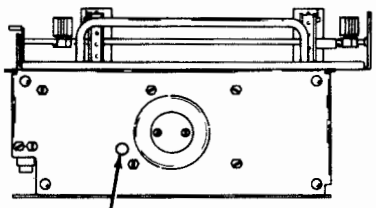 R4 RESISTOR (Accessible through hole in rear plate of power module.)	Turn power off (ac cord adaptor switch to OFF). Measure LF magnet coil resistance (TP2 and TP3 on 408646 test assembly). A reading of 44.5 ohms should be obtained when LF toggle switch on test assembly is operated. If resistance measurement is correct, check all line feed adjustments ie: Clutch BIDREC Gap (Page 6-15) Clutch Shoe Release Arm Spring (Page 6-15) Clutch Shoe Release Arm (Page 6-16) Line Feed Armature Gap (Page 6-19) Clutch Stop Lever (Page 6-20) Clutch Magnet and Latch Spring (Page 6-15) Line Feed Bar Eccentric (Page 6-17) Line Feed Bail Spring (Page 6-18) Clutch Drive Belt Tension (Page 6-18). If resistance is not correct, replace line feed magnet assembly (400470). If above actions do not clear trouble, replace printer.

ANALYSIS QUESTION	"YES" RESPONSE DIRECTIVE	"NO" RESPONSE DIRECTIVE
41. Is the ribbon feed mechanism operating properly? -- ie: Ribbon spools rotating. Ribbon reverse working. To check ribbon reverse manually, operate the reversing arms with printer operating (TS9 ON). No ribbon foldover.	Go to 42. 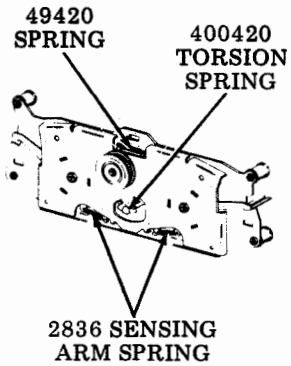 	Check ribbon drive belt (400630). 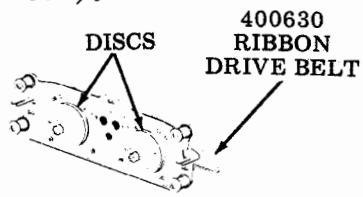 Remove 402420 (late design) or 400440 (early design) ribbon mechanism and check springs. Replace if broken. Check Ribbon Tracking adjustment (Page 6-46). Replace ribbon mechanism.
42. Are any characacters being printed?	Go to 43.	Check Impeller Shaft Sensor Gap (Page 6-29). Check Flag Sensor Gap (Page 6-30). Check Impeller Shaft Sensor (Final) (Page 6-31). Check impeller sensor for 130 ohms. Measure at connector J3 terminal H to J. Check flag sensor for 130 ohms. Measure at connector J3 terminal E to F. Replace sensor (400615) if incorrect resistance (cut leads and splice in). For early design sensor with metal shell, check for shorts to frame ground at J3 terminals E, F, H, and J. Replace 410640 circuit card. (See Note 3, Page 4-70.)

D. COMPONENT ANALYSIS (Cont)

9. PRINTER (Cont)

ANALYSIS QUESTION	"YES" RESPONSE DIRECTIVE	"NO" RESPONSE DIRECTIVE
43. Is the carrier font symbol the only symbol printed? Font symbols: Upper Case Lower Case Weather Line Dwg Fractions Gothic	Go to 44.	If ! (exclamation) or __ (underline) are printed, check the Flag Sensor (Final) -- Under Power adjustment (Page 6-32). Replace 410640 circuit card. (See Note 3, Page 4-70.)
44. Are any columns not printing?	Go to 45.	For friction feed units, go to 48. For tractor feed units, go to 49.
45. Are any of the following groups of columns missing? 1 - 12 13 - 24 25 - 36 37 - 48 49 - 60 61 - 72 73 - 80	Replace 410640 circuit card. (See Note 3, Page 4-70.)	Go to 46.
46. Of the columns that are missing, are they all odd numbered? Example: 1, 3, 19, 71 -- or are they all even numbered? Example: 2, 8, 42, 68.	Check the position of the antifreeze strip.	Go to 47.

ANALYSIS QUESTION	"YES" RESPONSE DIRECTIVE	"NO" RESPONSE DIRECTIVE
46. (Cont)	Check for oil on anti-freeze strip. If present, spray with degreaser (Freon TF) 337449. 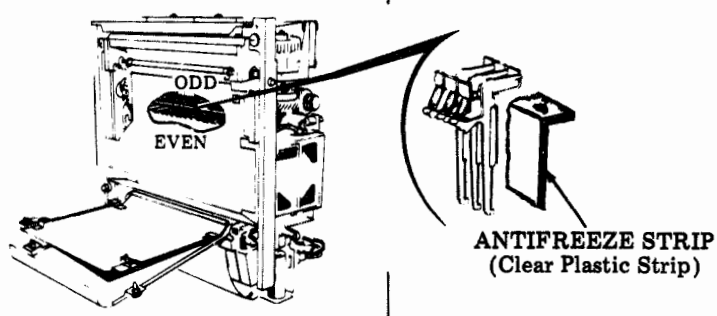 If antifreeze strip is distorted or missing, replace printer. If antifreeze strip is in correct position, go to 47.	
47. Are one or more columns missing?	Replace 410640 circuit card. (See Note 3, Page 4-70.) Replace printer.	Go to 44.
48. Are there erratic line feeds or some characters printing too high.	Check for bind in paper roll and throughout paper routing path. Check tension of pressure roller. Check alignment of paper guide shaft.	Go to 50.
49. Are there erratic line feeds or some characters printing too high?	Check for bind in paper throughout routing path. Check that paper is properly feeding through tractor assembly. Check all tractor assembly adjustments.	Go to 50.

D. COMPONENT ANALYSIS (Cont)

9. PRINTER (Cont)

ANALYSIS QUESTION	"YES" RESPONSE DIRECTIVE	"NO" RESPONSE DIRECTIVE
50. Is the font symbol clipped on the left or right?	Check the Impeller Shaft Sensor (Final) -- Under Power adjustment (Page 6-31). Replace printer if cross shaft has play in it.	For friction feed units, go to 51. For tractor feed units, go to 52.
51. Does the low paper lamp on the printer (friction feed) turn on when the paper roll is removed?	Go to 53.	Check low paper switch positioning. Remove 410640 circuit card. Plug 408646 test assembly into J3 connector. Check continuity from the -24 V dc test point on test assembly to connector J3 terminal 3 (paper roll removed). If no continuity, check for continuity from connector J104 (disconnected) terminal 3 to the -24 V dc test point. If no continuity, replace 400561 pushbutton switch. If continuity is present from -24 V dc test point to J3 terminal 3, check continuity from P104 (disconnected) terminal 1 to 3. If no continuity, replace 400579 low paper switch assembly. If above fails to clear trouble, replace printer.

ANALYSIS QUESTION	"YES" RESPONSE DIRECTIVE	"NO" RESPONSE DIRECTIVE
52. Does the paper-out lamp light when a paper-out condition exists (printer operating in cabinet)? (Tractor Feed)	Go to 53.	Remove 410640 circuit card. Check continuity from J3 terminal 11 to J114 terminal 1. Continuity when paper is out. If no continuity, replace 402613 paper-out switch assembly. Check continuity from J3 terminal 10 to J3 terminal 11. No continuity when paper is out. If continuity is present, replace 402613 paper-out switch assembly. If switch above checks good, check continuity of lamp in PAPER switch on cabinet from P114 terminal 1 to 2. If no continuity, check lamp (333588) or pushbutton switch (335123).
53. Replace printer in cabinet and connect all cables. Install paper and close cabinet. Turn power to ON. Depress the red PAPER pushbutton. Does the motor run?	Go to 54.	Check for continuity on J3 connector from terminal 5 to 11 when PAPER pushbutton is depressed. If no continuity, replace 400561 switch on friction feed printer or replace 335123 switch (PAPER) on the cabinet associated with tractor feed printer. If continuity is present replace 410640 circuit card. (See Note 3, Page 4-70.)

D. COMPONENT ANALYSIS (Cont)

9. PRINTER (Cont)

ANALYSIS QUESTION	"YES" RESPONSE DIRECTIVE	"NO" RESPONSE DIRECTIVE
54. Generate 20 to 30 lines of printer copy by depressing TRANS START on ROP opcon or by sending (PRINT LOCAL) from the display monitor in a KDP arrangement. Is the copy free of horizontal ink smudges caused by the ribbon rubbing against the paper?	Go to 55.	Check Left and Right Ribbon Guides adjustment (Pages 6-44 and 6-45). Check Paper Positioner Roller -- Under Power adjustment (Page 6-47).
55. Is the printer copy free from double print or ghost images?	Go to 56.	Check Left and Right Carrier Sprocket adjustments (Pages 6-42 and 6-43). Check that type pallets are seated properly in carrier. Seat pallets to ride against backup bar. Replace type carrier.
56. Is the printer copy clear and easily readable?	Go to 57.	Replace ribbon (402444). Check following adjustments: Backup Bar (Final) (Page 6-38) Left and Right Carrier Sprockets (Pages 6-42 and 6-43). Left and Right Ribbon Guides (Pages 6-44 and 6-45).

ANALYSIS QUESTION	"YES" RESPONSE DIRECTIVE	"NO" RESPONSE DIRECTIVE
57. Is the printed paper free from embossing (especially noticeable on characters such as hyphen or underline)?	Go to 58.	Check Backup Bar (Final) adjustment (Page 6-38). Replace type carrier.
58. Is the print density uniform throughout the line without gradual variations?	Go to 59.	Check Backup Bar (Final) adjustment (Page 6-38) and Left and Right Carrier Sprocket adjustments (Pages 6-42 and 6-43).
59. Is the print density uniform throughout the line without random variations?	Go to 60.	Check Paper Positioner Roller adjustment (Page 6-47). Check Left Carrier Sprocket adjustment (Page 6-42).
60. Are the bottoms of characters printed clearly (not light) at both ends of the line?	Go to 61.	Check Left and/or Right Carrier Sprocket adjustments (Pages 6-42 and 6-43). If printing is light at left end of line, replace 400201 front casting assembly on friction feed, 402624 left casting on tractor feed. If printing is light at right end of line, replace 400300 right casting assembly on friction feed, 402622 right casting assembly on tractor feed.
61. Are adjacent characters in the type carrier printed in place of the proper character (ie, T instead of S or B instead of A -- one character delay)?	Check the following: Flag Sensor Gap (Preliminary) adjustment (Page 6-30), Impeller Shaft Sensor Gap adjustment (Page 6-29), and type carrier to see that flags are on proper type pallet (flag on K for monocase type carrier and on + for	Go to 62.

D. COMPONENT ANALYSIS (Cont)

9. PRINTER (Cont)

ANALYSIS QUESTION	"YES" RESPONSE DIRECTIVE	"NO" RESPONSE DIRECTIVE
61. (Cont)	up-low type carrier). Rotate impeller shaft and check to see that flags do not strike the right ribbon guide bracket.	

FLAG ON +

Character Sequence in Up-Low Type Carrier

FLAG ON K

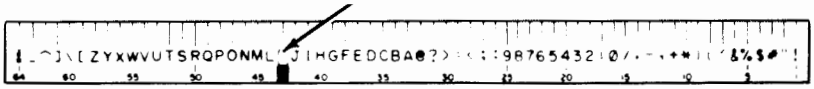

Character Sequence in Monocase Type Carrier

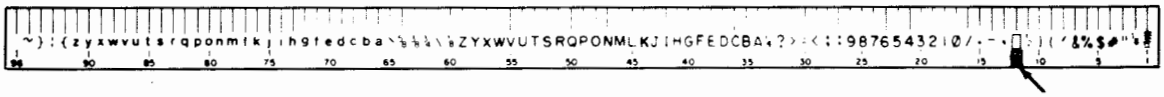

FLAG ON +

Character Sequence in Fraction Type Carrier

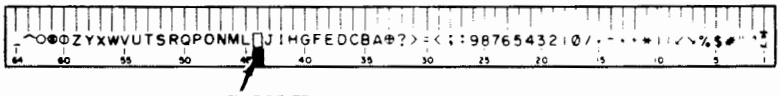

FLAG ON K

Character Sequence in Weather Type Carrier

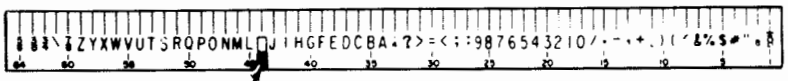

FLAG ON K

Character Sequence in Large Gothic Type Carrier

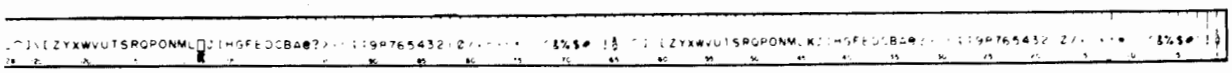

FLAG ON 172 POSITION

Character Sequence in Line Drawing Type Carrier

ANALYSIS QUESTION	"YES" RESPONSE DIRECTIVE	"NO" RESPONSE DIRECTIVE
62.a. Are all individual characters printed clearly when receiving locally or on-line?	a. Place printer in service.	a. Check type carrier for missing, broken, distorted, or dirty type pallets. Replace printer.
b. On Tractor Feed only: When a FF character or local form feed command is received, does paper advance one form correctly (Forms switch ON).	b. Place printer in service. 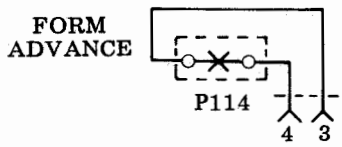 	b. Verify proper belt installation. Check that the selector lever on form-out assembly is properly detented. Check the following adjustments per PART 6 -- ADJUSTMENTS. Form-Out Contact Lateral (Page 6-26) Form Selector Lever Guide (Page 6-21) Form-Out Gear Backlash (Page 6-22) Form-Out Contact to Belt Spacing (Preliminary and Final) (Pages 6-22 and 6-23). If form-out fails when FORM ADVANCE button is depressed, check for continuity between terminals 3 and 4 on the P114 connector of the cabinet. If no continuity, replace 335123 switch (FORM ADVANCE) or equivalent on cabinet. Check wiring from J114 terminal 4 to J3 terminal 5 on the printer. With Forms switch ON, check for continuity between 3 and 10 on P105 connector.

D. COMPONENT ANALYSIS (Cont)

9. PRINTER (Cont)

ANALYSIS QUESTION	"YES" RESPONSE DIRECTIVE	"NO" RESPONSE DIRECTIVE
62.b. (Cont)	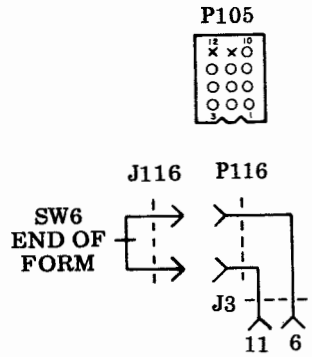	If no continuity, replace switch with 402406. Check for continuity between terminals 11 and 6 on J3 when form-out contact is on cam. If no continuity, repair wiring or replace form-out assembly 402570. Replace printer.
63.a. Does motor run?	Go to 63.b.	Go to 64.
b. Does the motor run all the time?	Go to 64.	Go to 63.c.
c. Does the printer line feed properly (from line or cabinet PAPER key, if present)?	Go to 63.d.	Verify external connections. If good, refer to PART 7 -- COMPONENT ACCESS, and remove printer from cabinet, if present. Connect 402781 ac line cord adaptor to J113 connector on printer. Plug 402782 plug into J114 on printer. Set printer test switch to ON. Operate 402781 ac line cord adaptor switch to ON. Go to 77.
d. Do the ribbon spools rotate and reverse properly?	Go to 63.e.	Go to 80.
e. Are any characters printed?	Go to 63.f.	Go to 81.
f. Are characters printed properly?	Go to 63.g.	Place printer test switch ON. Go to 82.
g. Is paper-out indication obtained when paper is out?	Go to 63.h.	Go to 87.
h. Does form feed advance paper properly?	Place printer in service.	Go to 100.

ANALYSIS QUESTION	"YES" RESPONSE DIRECTIVE	"NO" RESPONSE DIRECTIVE
64. Refer to PART 7 -- COMPONENT ACCESS, and remove printer from cabinet, if present. Connect 402781 ac line cord adaptor to J113 connector on printer. Plug 402782 plug into J114 on printer. Set printer test switch to OFF. Operate 402781 ac line cord adaptor switch to ON. Does printer motor run?	Go to 65.	Go to 67.
65. Operate 402781 cord switch to OFF position. Remove 410729 circuit card from printer, as follows: 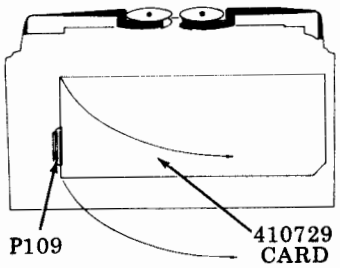 a. Remove cover plate from bottom of printer. b. Disconnect P109 ribbon connector from card. c. Rotate card away from printer about 90° in direction opposite from ribbon connector. d. Disconnect P103 and P106 connectors from card and remove card.		Replace 410729 circuit card with new card by reversing the order of removal -- connect P103 and P106 connectors first. (Card which has been removed is defective.) (See Note 3, Page 4-70.)

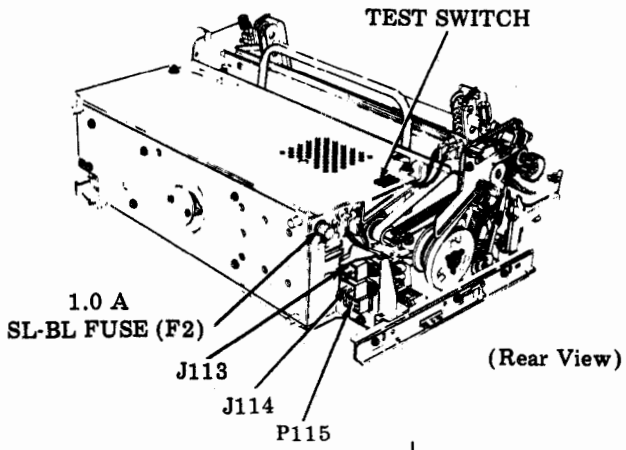

D. COMPONENT ANALYSIS (Cont)

9. PRINTER (Cont)

ANALYSIS QUESTION	"YES" RESPONSE DIRECTIVE	"NO" RESPONSE DIRECTIVE
65. (Cont) Operate test cord switch to ON. Does printer motor run?	Replace 410155 card, reconnecting all connectors. Fasten and tighten strain relief screw. Go to 66.	
66. With an ohmmeter check continuity between terminals 13 and 14 on P109 plug. Is there continuity?	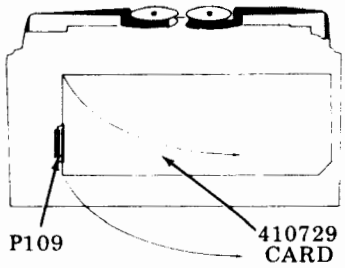 Replace 402861 test switch.	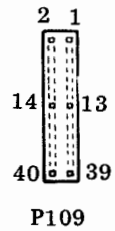 Replace 410155 circuit card.
67. Operate printer test switch to ON. Does printer motor run?	Go to 77.	Go to 68.
68. Operate 402781 ac line cord adaptor switch to OFF. Are the motor gears and associated drive mechanisms free to operate (no mechanical binds)?	Check 1.0 amp SL-BL printer fuse (F2). If blown, replace with 143306 fuse (early design printers have 2.0 amp fuse). If fuse blows again, go to 69. Check thermal overload protector -- depress red button on fan end of motor. Go to 73.	If mechanical bind is not clearly evident and easily rectified, replace entire printer.

ANALYSIS QUESTION	"YES" RESPONSE DIRECTIVE	"NO" RESPONSE DIRECTIVE
69. Disconnect P101 connector. Replace printer fuse (143306 fuse, 1A SL-BL). Operate test cord switch to ON (this turns on power). Does printer fuse blow?	Problem is in cabinet wiring -- locate short. Replace printer fuse. 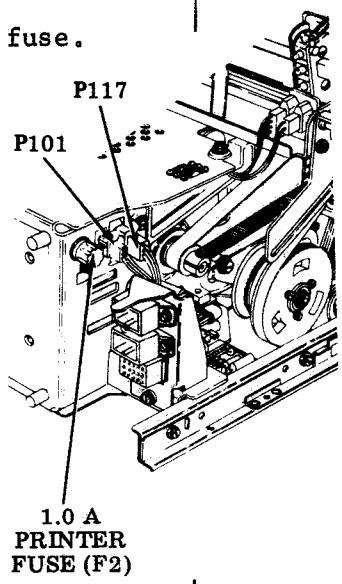 	Go to 70.
70. Reconnect P101 connector. Operate test cord switch to OFF. Dismantle 402720 power module from printer leaving all cabling connected. 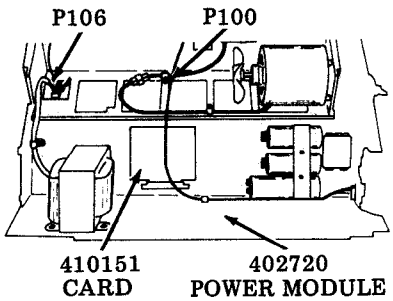 Disconnect P100 connector on the motor control assembly. Operate ac line cord adaptor switch to ON. Does printer fuse blow?	Go to 75.	Go to 71.

D. COMPONENT ANALYSIS (Cont)

9. PRINTER (Cont)

ANALYSIS QUESTION	"YES" RESPONSE DIRECTIVE	"NO" RESPONSE DIRECTIVE
71. Reconnect P100 plug. Disconnect P105 plug on the motor control assembly. Turn power on. Does F100 fuse blow?	Go to 72.	Go to 73.
72. Disconnect P107 plug on motor assembly. Turn power on. Does F100 fuse blow?	Replace 410155 circuit card. Replace F100 fuse.	Replace 402402 motor. 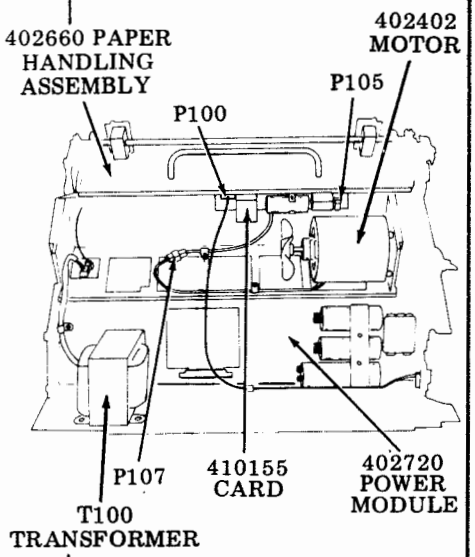
73. Reconnect P105 plug. Remove 410151 circuit card from J102 receptacle. Turn power on. Does F100 fuse blow?	Go to 74. Replace F100 fuse.	Replace 410151 circuit card.
74. Reinsert 410151 circuit card. Remove 410729 circuit card by following the directions in Question 65. Turn power on. Does F100 fuse blow?	Replace printer.	Replace 410729 circuit card with new card by reversing the order of removal -- connect P103 and P106 connectors first. (Card which has been removed is defective.)

ANALYSIS QUESTION	"YES" RESPONSE DIRECTIVE	"NO" RESPONSE DIRECTIVE
75. With an ohmmeter, check for short between primary and secondary windings on T100 transformer. Is transformer shorted?	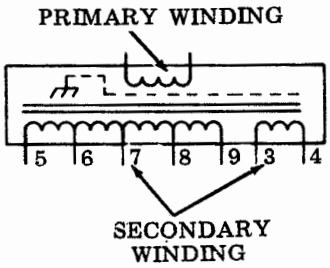 Replace T100 transformer (402742).	Replace entire printer.
76. Remove 410729 circuit card by following directions of Question 65. Plug 408646 test assembly in P109 connector. Operate 402781 ac line cord adaptor switch to ON. Operate MOTOR switch on 408646 test assembly to ON. Does printer motor run?	Replace 410729 circuit card by reversing the order of removal. Card which has been removed is defective.	Go to 77.
77. Measure -24 V dc ±10% at test point on 408646 test assembly. Is -24 V dc present?	Go to 78.	If zero volts, check fuse F1 (long fuse on top right of 410151 circuit card). Replace fuse (321955) if blown. If fuse is good, replace 410151 circuit card. 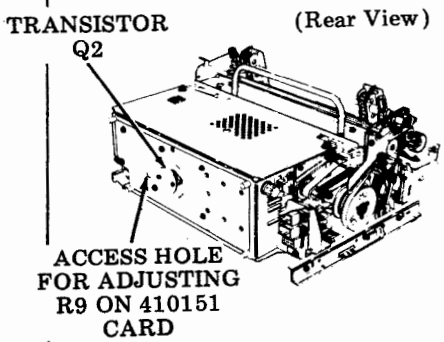

D. COMPONENT ANALYSIS (Cont)

9. PRINTER (Cont)

ANALYSIS QUESTION	"YES" RESPONSE DIRECTIVE	"NO" RESPONSE DIRECTIVE
77. (Cont)		If voltage is between -18 V dc and -28 V dc, refine adjustment (R9 resistor). If voltage is out of adjustment range, replace transistor Q2 (318835).
78. With an ohmmeter check for continuity between terminals 13 and 14 on P109 plug. Is there continuity?	Go to 79.	Replace 402720 power module.
79. Disconnect P105 receptacle on the motor control assembly. Operate 402781 ac line cord adaptor switch to ON. With a volt-ohmmeter check for -24 V dc between terminals 1 and 3 on P105 plug. 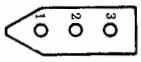 P105 Is -24 V dc present?	Go to 80.	Check wiring from P105 plug terminals 1 and 3 to P109 plug terminals 5 and 6. 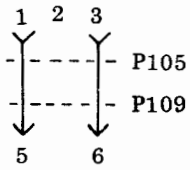 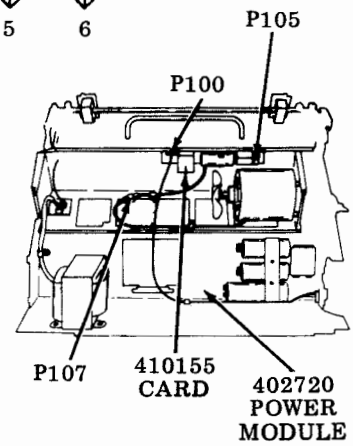

ANALYSIS QUESTION	"YES" RESPONSE DIRECTIVE	"NO" RESPONSE DIRECTIVE
80. Reconnect P105 receptacle and disconnect P107 plug on the motor control assembly. Operate 402781 ac line cord adaptor switch to ON. With a volt-ohmmeter check for 115 V ac between terminals 1 and 2, 2 and 3, on P107 plug. Is 115 V ac present?	Go to 81. 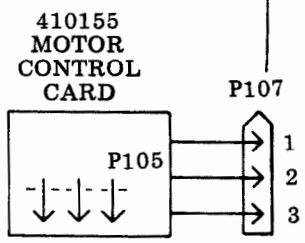	Replace 410155 circuit card.
81. With an ohmmeter measure the following resistances between the indicated terminals on J107 connector: Terminal 1 to 2 -- 40 ohms Terminal 1 to 3 -- 50 ohms Terminal 2 to 3 -- 13 ohms (All readings ±10%) Are measured resistances correct?	Replace printer. 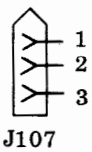	Replace motor (402402).
82. Is the impeller shaft being driven?	Go to 83. 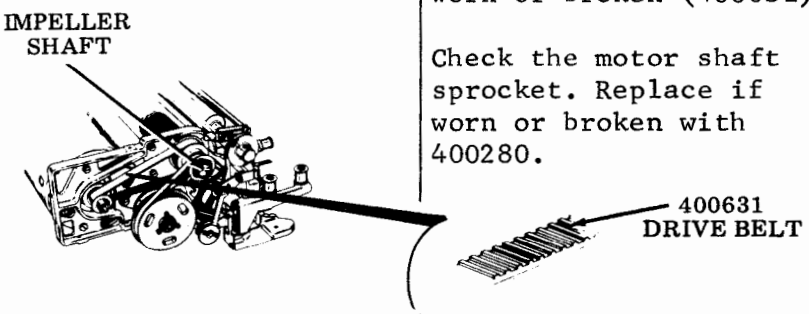	Check the impeller shaft drive belt. Replace if worn or broken (400631). Check the motor shaft sprocket. Replace if worn or broken with 400280.

D. COMPONENT ANALYSIS (Cont)

9. PRINTER (Cont)

ANALYSIS QUESTION	"YES" RESPONSE DIRECTIVE	"NO" RESPONSE DIRECTIVE
83. Does printer line feed properly with printer Test switch ON? Failure symptoms are: No line feed. Intermittent line feed. Continuous line feed.	Go to 85. 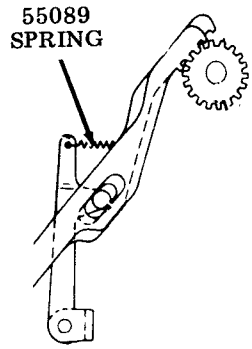 	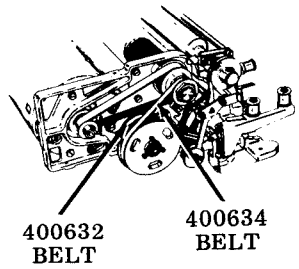 Check line feed belts (broken or missing), 400634 and 400632. Check line feed pawls for engagement with gear. Check 55089 spring; replace if broken or distorted. Check loose mounting of line feed magnet assembly on its core. Go to 84.
84. Remove 410729 circuit card from printer following procedure in Question 3. Plug 408646 test assembly into P109 connector. Operate MOTOR switch on 408646 test assembly to ON. Operate 407781 ac line cord adaptor switch to ON. Depress LF toggle switch to ON. Does the printer line feed?	Replace 410729 circuit card by reversing removal procedure.	If a VTVM or digital VOM with a 1% accuracy is available, measure -24 V ±0.24 V dc as described below; if not, replace 410151 circuit card. To measure -24 V dc: a. Leave motor switch on 408646 test assembly ON. b. Connect motor to TP3 (GRD) and TP1 (LOG -24 V) on test assembly. c. Place LF switch on test assembly ON and read meter. Turn off immediately after obtaining reading. Is -24 V ±0.24 V dc present?

ANALYSIS QUESTION	"YES" RESPONSE DIRECTIVE	"NO" RESPONSE DIRECTIVE
84. (Cont)		Refine adjustment of R9 on 410151 circuit card if necessary. If voltage was low (-18 V dc to to -22 V dc), install original 410729 circuit card and recheck line feed operation. Turn power OFF. Measure LF magnet coil resistance (TP2 and TP3 on 408646 test assembly). A reading of 33.5 ohms should be obtained when the LF toggle switch on test assembly is operated. If the line feed coil is opened or shorted, replace the line feed assembly (402621). If resistance measurement is correct, check the following line feed adjustments: Clutch BIDREC Gap (Page 6-15) Clutch Shoe Release Arm Spring (Page 6-15) Clutch Shoe Release Arm (Page 6-16) Line Feed Armature Gap (Page 6-19) Clutch Stop Lever (Page 6-20) Clutch Magnet and Latch Spring (Page 6-15) Line Feed Bar Eccentric (Page 6-17) Line Feed Bail Spring (Page 6-18) Clutch Drive Belt Tension (Page 6-19)

D. COMPONENT ANALYSIS (Cont)

9. PRINTER (Cont)

ANALYSIS QUESTION	"YES" RESPONSE DIRECTIVE	"NO" RESPONSE DIRECTIVE
85. Is the ribbon feed mechanism operating properly? -- ie: Ribbon spools rotating. Ribbon reverse working. To check ribbon reverse manually, operate the reversing arms with printer operating (printer test switch ON).	Go to 86.	Check ribbon drive belt (400635). 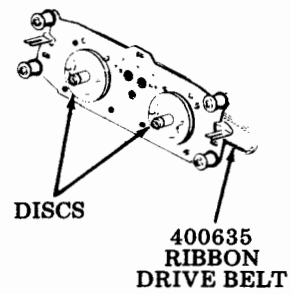 Remove 402420 ribbon mechanism and check springs. Replace if broken. 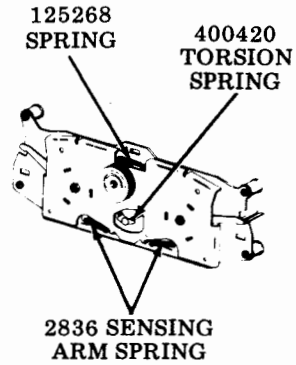 Replace ribbon mechanism (402420).
86. Are any characters being printed?	Go to 87.	Check Impeller Shaft Sensor Gap (Page 6-29). Check Flag Sensor Gap (Preliminary) (Page 6-30). Check Impeller Shaft Sensor (Final) -- Under Power (Page 6-31). Check impeller sensor for 145 ohms maximum. Measure at connector P106, terminals 1 and 2.

ANALYSIS QUESTION	"YES" RESPONSE DIRECTIVE	"NO" RESPONSE DIRECTIVE
86. (Cont)		Check flag sensor for 145 ohms maximum. Measure at connector P106, terminal 3 to 4. Replace sensor (400615) if incorrect resistance (cut leads and splice in). If these actions do not clear trouble, remove 410729 circuit card from printer by following the directions of Question 65. and replace with new card. (See Note 3, Page 4-70.)
87. Is the carrier font symbol the symbol printed? Font symbols: Up-Low Monocase	Go to 88.	If ! (exclamation point) or ___ (underline) are printed, check the Flag Sensor (Final) -- Under Power adjustment (Page 6-32; Impeller Shaft Sensor Gap (Page 6-29). If the adjustments are within limits, remove 410729 circuit card from printer by following the directions of Question 65. and replace with new card. (See Note 3, Page 4-70.)
88. Are any columns not printing?	Go to 89.	Go to 92.
89. Are any of the following groups of columns missing? 1-12 73-84 13-24 85-96 25-36 97-108 37-48 109-120 49-60 121-132 61-72	Remove 410729 circuit card from printer by following the directions of Question 65. and replace with new card. (See Note 3, Page 4-70.)	Go to 90.

D. COMPONENT ANALYSIS (Cont)

9. PRINTER (Cont)

ANALYSIS QUESTION	"YES" RESPONSE DIRECTIVE	"NO" RESPONSE DIRECTIVE
90. Of the columns that are missing, are they all odd-numbered (example: 1, 3, 19, 71) or are they all even-numbered (example: 2, 8, 42, 68)?	Check the position of the antifreeze strip. Check for oil on antifreeze strip. If present, spray with 337449 Degreaser (Freon TF). 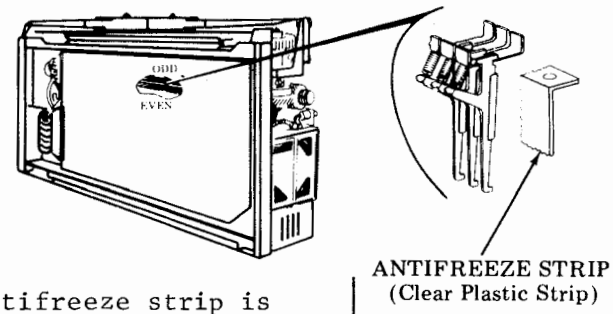 If antifreeze strip is distorted or missing, replace entire printer. If antifreeze strip is in correct position, go to 91.	Go to 91.
91. Are one or more columns missing?	Check Impeller Shaft Sensor adjustment (Page 6-31); and Flag Sensor (Final) -- Under Power adjustment (Page 6-32). Replace 410729 circuit card. Replace printer.	Go to 92.
92. Are there erratic line feeds or some characters printing too high?	Check for bind in paper throughout routing path. Check that paper is properly feeding through tractor assembly. If amber belt is worn or broken, replace with 402877 belt. Check all tractor assembly and paper positioning shaft adjustments in PART 6 -- ADJUSTMENTS.	Go to 93.

ANALYSIS QUESTION	"YES" RESPONSE DIRECTIVE	"NO" RESPONSE DIRECTIVE
93. Is the font symbol clipped on the left or right?	Check the Impeller Shaft Sensor (Final) -- Under Power adjustment (Page 6-31).	Go to 94.
94. Is paper-out indication obtained when a paper-out condition exists?	Go to 95. 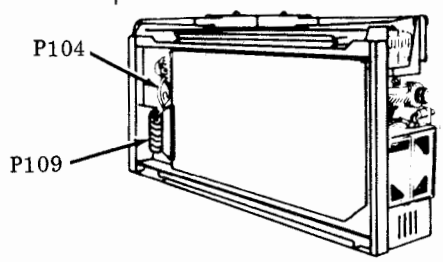 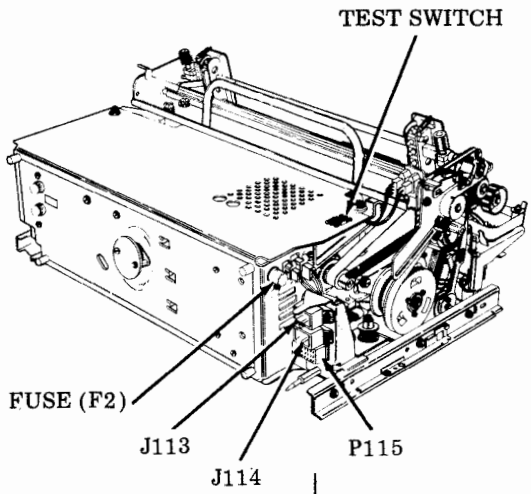 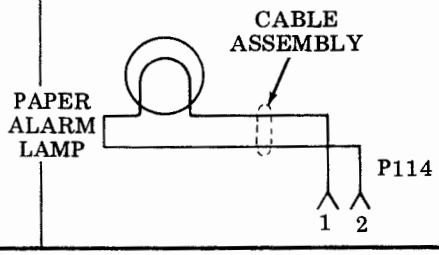 	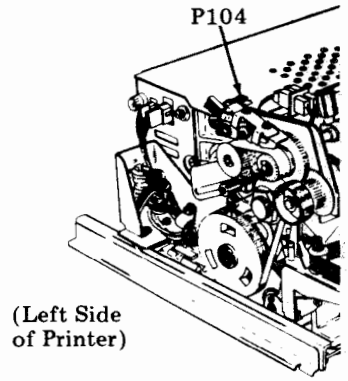 Check Paper-Out Switch adjustment (Pages 6-49 and 6-50). Check the following measurements on the J104 receptacle terminals: 1-2 No continuity 3-4 Continuity with paper out. 1-2 Continuity 3-4 No continuity with paper in. Replace 402510 paper-out switch. If measurements are not met, check wiring from P104 to P109. 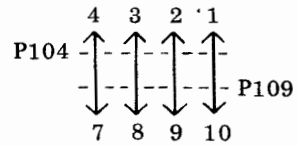 Check wiring from P109 to J114. 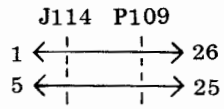 Check cabinet wiring from P114 terminals 1 and 2 to lamp holder terminals. Replace lamp 333588. Replace 410729 circuit card.

D. COMPONENT ANALYSIS (Cont)

9. PRINTER (Cont)

ANALYSIS QUESTION	"YES" RESPONSE DIRECTIVE	"NO" RESPONSE DIRECTIVE
95. Replace printer in cabinet (if removed) and connect all cables. Install paper and close cabinet. Turn power ON. Depress PAPER switch ON. Does the motor run?	Go to 96.	Remove printer from cabinet. Replace 410729 circuit card. With an ohmmeter check for continuity between the following terminals: J115 terminals 12 and 13 J115 terminals 14 and 15 If no continuity, repair wiring. Check continuity at printer SSI connector at rear of cabinet between: Terminals 1 and 2 Terminals 3 and 6 If no continuity, repair wiring. Replace 410056 circuit card. Check for continuity between terminals 3 and 8 on P114 connector on cabinet. Check for continuity between terminals 3 and 4 on P114 connector on the cabinet when PAPER button is depressed. If no continuity, replace 335123 switch (PAPER) or equivalent on cabinet. Check for continuity between terminals 23 and 24 on the P109 connector. NOTE: 410729 circuit card removed and printer in cabinet. Depress PAPER button. If no continuity is present, repair wiring.

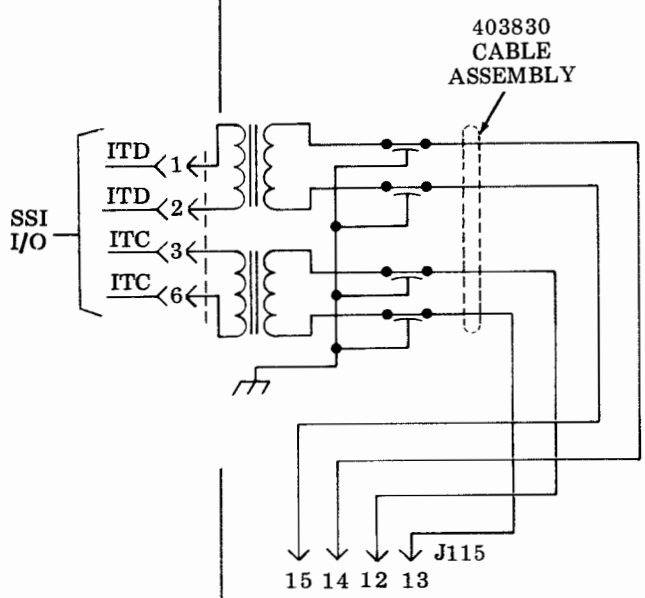

ANALYSIS QUESTION	"YES" RESPONSE DIRECTIVE	"NO" RESPONSE DIRECTIVE
96. Generate 20 to 30 lines of printer copy. Is the copy free of horizontal ink smudges caused by the ribbon rubbing against the paper?	Go to 97.	Check Ribbon Guide adjustments (Pages 6-44 and 6-45). Check Paper Positioner Roller adjustments (Page 6-47).
97. Is the printer copy free from double print or ghost images?	Go to 98.	Check Left and Right Carrier Sprocket adjustments (Pages 6-42 and 6-43). Check that type pallets are seated properly in carrier. Seat pallets with 402878 gauge. Replace type carrier.
98. Is the printer copy clear and easily readable?	Go to 99.	Replace ribbon (402444). Check the following adjustments: Left and Right Carrier Sprocket (Pages 6-42 and 6-43) and Left and Right Ribbon Guides (Pages 6-44 and 6-45).
99. Is the printed paper free from embossing (especially noticeable on characters such as hyphen or underline)?	Go to 100.	Check Paper Positioner Roller (Page 6-47) and Backup Bar (Final) (Page 6-38) adjustments. Replace type carrier.
100. Is the print density uniform throughout the line without random variations?	Go to 101.	Check Left and Right Carrier Sprocket (Pages 6-42 and 6-43) and Paper Positioner Roller (Page 6-47) adjustments.
101. Is the print density uniform throughout the line without random variations?	Go to 102.	Check Paper Positioner Roller adjustments (Page 6-47). Check Left Carrier Sprocket adjustment (Page 6-42).

D. COMPONENT ANALYSIS (Cont)

9. PRINTER (Cont)

ANALYSIS QUESTION	"YES" RESPONSE DIRECTIVE	"NO" RESPONSE DIRECTIVE
102. Are the bottoms of characters printed clearly (not light) at both ends of the line?	Go to 103.	Check Left and/or Right Carrier Sprocket adjustments (Page 6-42 and Page 6-43). Replace printer.
103. Are adjacent characters in the type carrier printed in place of the proper character (ie, T instead of S or B instead of A -- one character delay)?	Check the following: Flag Sensor Gap (Preliminary) adjustment (Page 6-30), Impeller Shaft Sensor Gap adjustment (Page 6-29), and check that flags are on proper type pallet (flag on # or C for monocase type carrier and on c for up-low type carrier) -- for exact locations, see below. Rotate impeller shaft and check to see that flags do not strike the right ribbon guide bracket.	Go to 104.

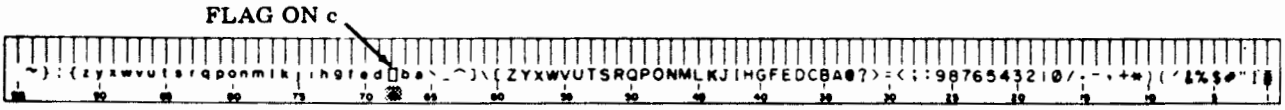

a. Character Sequence in Up-Low Type Carrier

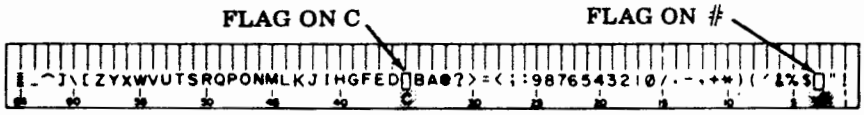

b. Character Sequence in Monocase Type Carrier

c. On 400781 (ASCII/KATAKANA) type carriers, flag is in position 108.
(Position 108 is the 13th position after the ~ symbol counting clockwise and facing the type carrier. The A/K pallet is associated with the flag.)

ANALYSIS QUESTION	"YES" RESPONSE DIRECTIVE	"NO" RESPONSE DIRECTIVE
104. Are all individual characters printed clearly when receiving locally or on-line?	Go to 105.	Check type carrier for missing, broken, distorted, or dirty type pallets. Replace type carrier. Replace printer.
105. When a FF character or local form feed command is received, does paper advance one form (Forms switch ON)?	Place printer in service. 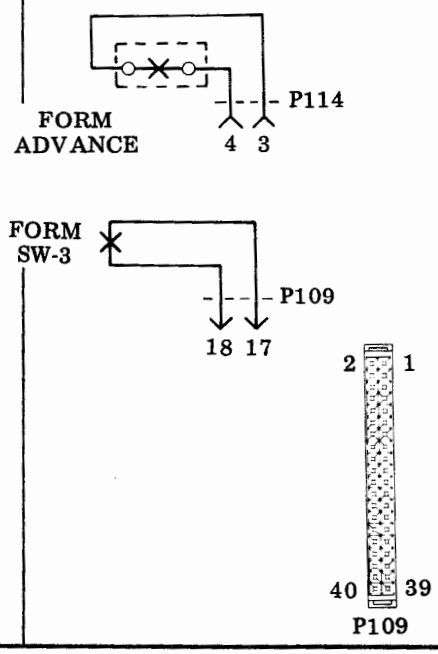 	Verify proper belt installation. Check that the selector lever on form-out contact assembly is properly detented. Check the following adjustments: Form-Out Contact Lateral (Page 6-26) Form Selector Lever Guide (Page 6-21) Form-Out Gear Backlash (Page 6-22) Form-Out Contact to Belt Spacing (Pages 6-22 and 6-23). If form-out fails when FORM ADVANCE button is depressed, check for continuity between terminals 3 and 4 on P114 connector of the cabinet. If no continuity, replace 335123 switch (FORM ADVANCE) or equivalent, on cabinet. Check wiring from J114, terminal 4 to P109, terminal 23 on the printer. With Forms switch ON, check for continuity between terminals 17 and 18 on P109 connector. If no continuity, replace 402861 switch.

D. COMPONENT ANALYSIS (Cont)

9. PRINTER (Cont)

ANALYSIS QUESTION	"YES" RESPONSE DIRECTIVE	"NO" RESPONSE DIRECTIVE
105. (Cont) 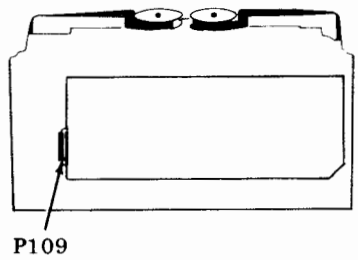	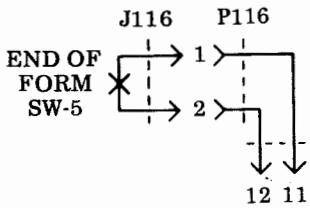	Check for continuity between terminals 11 and 12 on P109 when form-out contact is on cam. If no continuity, repair wiring or replace form-out assembly (402570). Replace printer.

E. REPLACEMENT PARTS AND UNITS

Following is an index of replacement parts, units and associated reference page numbers.

1. 40PSU101 POWER SUPPLY

Part No.	Description	Ref. Page No.
129920	Fuse, 5A SLO-BLO	4-31
312042	Connector	7-41
338685	Fuse Holder Assembly	7-41
401002	Bridge Rectifier	4-31
401004	Capacitor	4-31
401005	Terminal Block	7-41
401009	Capacitor	4-31
401083	Fuse, 12A	4-31
401084	Fuse, 8A	4-31
410600	Regulator Circuit Card Assembly	4-32
40PSU101	Power Supply	4-31

2. 40MN101 DISPLAY MONITOR

318822	Transistor (Q2)	7-30
341559	Brightness Control Assembly	7-24
341568	Transistor (Q3)	7-30
341569	Transistor (Q1)	7-30
341570	Transistor (Q4)	7-30
341578	Fuse	7-27
341581	AC Cable Assembly	7-38
341582	Video Cable Assembly	7-37
341689	Choke Assembly	7-33
341698	Deflection Yoke Assembly	7-32
341699	CRT Cable Assembly	7-31
341721	Power Distribution Assembly	7-24
341726	Monitor Control Assembly	7-29
403594	Modification Kit	7-27
410656	INT/AMP Circuit Card Assembly	7-24

Part No.	Description	Ref. Page No.
410852	Rectifier Circuit Card Assembly	7-25
410853	Regulator Circuit Card Assembly	7-25
410854	High Voltage Circuit Card Assembly	7-24
40MN101	Display Monitor	7-23

3. OPERATOR CONSOLE

197464	Diode	7-58
340701	Keytop, Blocking (Control)	7-48
340714	Keytop, Blocking (Data)	7-48
340720	Keyswitch, Basic	7-55
340721	Keyswitch, Repeat	7-55
340722	Keyswitch, Latching	7-55
340819	Keytop, Scrol Up	7-48
340836	Keytop, Scrol Down	7-55
340837	Keytop, Cursor Tab	7-48
340894	Keytop, Caps Lock	7-48
340895	Keytop, Segment Adv	7-48
340898	Keytop, Cursor Tab (Wide)	7-48
341088	Test Indicator Assembly	7-54
341097	Keyswitch, Combination	7-55
341648	Terminal	7-50
346103	Keytop, S/R	7-48
346104	Keytop, Print On Line	7-48
346105	Keytop, Print Local	7-48
346106	Keytop, Intrpt	7-48
346107	Keytop, Highlight	7-48
346108	Keytop, Form Enter	7-48
346110	Keytop, Tab Set	7-48
346111	Keytop, Tab Clear	7-48
346121	Keytop, Form Send	7-48
346122	Keytop, Rec Tape	7-55
346211	Keyswitch, Indicator	7-55
346212	Keyswitch, Indicator	7-59
346213	Keyswitch, Indicator	7-59
346259	Keytop, Blocking (Cursor Tab)	7-55
410055	Interface/Bell Circuit Card	7-51
40K101CAK	Operator Console	

Tools for Opcon Maintenance

346257	Keyswitch	7-53
346260	Keytop Extractor	7-52

E. REPLACEMENT PARTS AND UNITS (Cont)

4. DISPLAY LOGIC

Part No.	Description	Ref. Page No.
341672	Wired Frame	7-13
341740	Cable, Controller/Display	7-9
410001	Circuit Card Assembly	7-12
410002	Circuit Card Assembly	7-12
410003	Circuit Card Assembly	7-12
410004	Circuit Card Assembly	7-12
410005	Circuit Card Assembly	7-12
410009	Circuit Card (40/2)	7-13
410020	Circuit Card Assembly	7-12
410021	Circuit Card Assembly	7-12
410022	Circuit Card Assembly	7-12
410657	Circuit Card Assembly (Up-Low Monocase)	7-12
410855	Circuit Card Assembly	7-13

5. 40C103 RO CONTROLLER

401055	Spacer	7-60
410580	Circuit Card Assembly	7-60
410582	Circuit Card Assembly	7-60
410583	Circuit Card Assembly	7-60
410584	Circuit Card Assembly	7-60
410585	Circuit Card Assembly	7-60
410587	Circuit Card Assembly	7-60

6. CONTROLLER

341907	Wired Frame (Basic Edit)	7-11
341909	Wired Frame (Full Edit)	7-11
402176	Wired Frame (40C204 Controller - 40/2)	7-11
410669	Circuit Card Assembly	7-11
410670	Circuit Card Assembly	7-11
410671	Circuit Card Assembly	7-11
410672	Circuit Card Assembly	7-11
410674	Circuit Card Assembly	7-11
410675	Circuit Card Assembly	7-11
410676	Circuit Card Assembly	7-11
410679	Circuit Card Assembly	7-11
410770	Circuit Card Assembly	7-11
410771	Circuit Card Assembly	7-11

7. PRINTER

NOTE: The letter preceding Ref. Page No. designates part usage:
F -- Friction Feed Printer only
T -- Tractor Feed Printer only
C -- Common to friction and tractor
* -- Asterisked parts are common to both the 80- and 132-column printers.

80-Column Printer

Part No.	Description		Ref. Page No.
* 2836	Spring	C	7-64
* 55089	Spring	T	7-86
* 70885	Spring Washer	T	7-82
*110438	Spring	C	7-83
*120166	Fuse	C	7-69
*125268	Spring	C	7-64
143306	Fuse, 1 Amp, Slow Blow	C	4-70
*153442	Screw, 10/32 x 1/2	C	7-66
152445	Spring	T	7-82
*177113	Insulator	C	7-71
178306	Relay (K101)	C	7-88
*182182	Fuse Holder	C	7-70
*318821	Bushing	C	7-71
*318835	Transistor	C	7-71
*328282	Fan	C	7-77
338728	Isolator	F	7-72
*341647	Terminal (Female)	C	
*341648	Terminal (Male)	C	
*341895	Cable	C	5-20
*400075	Ring, Retainer	C	7-74
400180	Printer W/Base	F	
400201	Front Casting Assembly	F	7-72
*400221	Idler	C	7-82
*400226	Idler Spring	C	7-82
*400280	Sprocket	C	7-68
400293	Shoulder Screw	C	7-84
400300	Right Casting Assembly	F	7-74
400317	Threaded Post	F	7-66
400402	Isolator	F	7-72
*400420	Spring	C	7-64
*400445	Washer	C	7-81
*400450	Roller	C	7-64
400457	Post	F	7-76
400470	Line Feed Assembly	F	7-66
400552	Paper Spindle	F	9-7
*400560	Switch, Slide	C	7-75
400579	Low-Paper Switch Assembly	F	7-78
*400615	Sensor	C	7-75
400629	Type Carrier (Up-Low)	C	7-65
400630	Belt	C	7-64
*400631	Belt	C	7-67
*400632	Belt	C	7-67
*400634	Belt	C	7-66

E. REPLACEMENT PARTS AND UNITS (Cont)

7. PRINTER, 80-Column Printer (Cont)

Part No.	Description			Ref. Page No.
400645	Type Carrier (Monocase)	C	Order one type carrier only to suit system requirements.	7-65
400774	Type Carrier (Weather)	C		9-5
400775	Type Carrier (Line Drawing)	C		9-5
400776	Type Carrier (Up-Low W/Fractions)	C		9-5
400778	Type Carrier (Monocase Large Gothic)	C		9-5
400901	Transformer	C		7-87
400903	Cover Assembly	F		7-71
400908	Power Supply Assembly	F		7-68
*400921	Connector	C		7-72
*400926	Card Connector	C		7-68
*400931	Spacer	C		7-75
400960	AC Input/Motor Control Assembly	F		7-68
400968	Relay	F		4-75
401647	Receptacle	F		7-69
*401649	Plug	F		7-69
*402402	Motor	C		7-87
*402406	Switch W/Cable	T		7-89
*402420	Ribbon Mechanism	C		7-64
402423	Relay (K100)	C		7-88
402425	Printer Assembly	T		
402427	Lamp	F		7-75
402430	Front Plate Assembly	T		7-85
402460	Paper Handling Assembly	T		7-82
402500	Pushbutton Switch	F		7-75
*402505	Retainer Ring	T		7-82
*402506	Retainer	T		7-82
*402507	Tractor, Form Feed (Left)	T		7-81
*402508	Tractor, Form Feed (Right)	T		7-81
*402570	Form-Out Assembly	T		7-86
402586	Formout Belt Set	T		9-6
402601	Bushing	T		7-88
402610	Spring, Paper-Out	T		7-89
402613	Paper-Out Switch Assembly	T		7-89
402618	Modification Kit (Motor Control)	F		7-70
402620	Power Supply Assembly	T		7-88
*402621	Line Feed Assembly	T		7-86
402622	Right Casting	T		7-84
402625	Left Arm	T		7-82
402626	Right Arm	T		7-85
402632	AC Input and Motor -- Control Assembly	F		7-67
402753	Ribbon Shield	T		7-81
*402755	Flag	C		6-27
402757	Top Guide	T		7-81
402785	Transformer	T (40P153)		7-87
402789	Power Supply Assembly	T (40P153)		7-88
402830	Printer With Base	T (40P153)		
*402862	Ribbon Roller	C		7-81
410150	Circuit Card Assembly	F		7-68
410640	Circuit Card Assembly	C		7-89
410681	Circuit Card Assembly	C		7-88

132-Column Printer

Part No.	Description	Ref. Page No.
321955	Fuse, 2-1/2 Amp, Fast Blow	5-15
341704	Terminal	
341705	Terminal	
400635	Belt, Toothed	7-85
400777	Type Carrier, Up-Low	7-81
400780	Type Carrier, Monocase	7-81
402510	Switch, Paper Out	7-89
402660	Paper Handling Assembly	7-82
402673	Arm, Left	7-82
402674	Arm, Right	7-85
402686	Shield, Ribbon	7-85
402699	Isolator	
402700	Printer Assembly (Not needed if 40P201ZZ ordered)	
402720	Module, Power Supply	7-88
402725	Front Plate Assembly	7-85
402742	Transformer Assembly	7-87
410151	Circuit Card	7-88
410155	Circuit Card, Motor Control	4-94
410729	Circuit Card (Not needed if 40P201ZZ ordered)	
40P201ZZ	Printer Less Type Carrier	

Printer Gauges and Troubleshooting Apparatus

80-Column Printer

402617	Gauge	6-35
402779	Test Power Cord	4-70
402780	Interlock Strapping Plug	4-70
402781	AC Line Cord Adaptor	4-70
402782	Interlock Strapping Plug	4-70
408646	Printer Test Assembly	4-70

132-Column Printer

402716	Left Gauge	4-70
402717	Right Gauge	4-70
402781	AC Line Cord Adaptor	4-70
402782	Interlock Strapping Plug	4-70
402868	Gauge	4-70
408646	Printer Test Assembly	4-70

E. REPLACEMENT PARTS AND UNITS (Cont)

8. CABINET

Part No.	Description	Ref. Page No.
333588	Lamp	7-94
335123	Switch (Form and Paper)	7-94
341891	Cable (Monitor)	7-93
341896	Cable, Data Set	2-101
341911	Cable (Monitor)	7-92
400567	SSI Feed Through Assembly	7-90
400568	Cable (Opcon)	7-90
400575	Switch, Interlock	7-98
400576	Bracket W/Filters	7-98
400577	Bracket W/Filters (Opcon)	7-97
400598	Cable, Interlock	7-90
400599	AC Distribution Assembly	7-90
400609	Cable (SSI)	7-90
400618	AC Distribution Assembly	7-92
400620	Cable (Opcon)	7-92
400621	SSI Feed Through Assembly	7-92
401040	Fan Assembly	7-91
401045	Pulley Assembly	7-101
401046	Fan Assembly	7-101
401053	Motor W/Cable	7-101
401274	Button (Cover Latch)	
401288	Button (Cover Latch)	
401299	Window	7-90
401600	AC Distribution Assembly	7-91
401627	Switch (AC)	7-102
401629	Cord W/Plug	7-92
401633	Cable (Monitor)	7-92
401634	Cable Assembly	7-102
401643	Cable Assembly	7-102
401665	AC Distribution Assembly	7-99
401673	Switch	7-99
402146	Cable (SSI)	7-92
402173	Cable (Monitor)	7-91
403462	Belt	7-101
403463	Pulley Belt	7-101
403785	Blower	7-94
403800	Button, Paper	7-94
403801	Button, Form	7-94
403820	Window	7-94
403830	Cable Assembly (SSI)	7-94
403835	Switch, Interlock	7-95
403845	Bracket W/Filters	7-94
403892	Cable (Printer and Fan)	7-95
403964	Cable (Opcon)	7-95
405047	Cable (Fan)	7-91
405048	Cable (Printer and Fan)	7-92
405049	Cable (Printer)	7-90
405050	AC Distribution Assembly	7-92
405051	Cable (Monitor)	7-92
405545	Cable (Printer and Fan)	7-95
405657	Window	7-94
408050	Fan Assembly	7-91
410056	Circuit Card Assembly (SSI)	7-94

PART 5 — WIRING DIAGRAMS

INDEX PAGE

A. GENERAL 2

B. SETS OR STATIONS
1. ROP CABINET 3
2. KDP SET -- 40/1 4
3. KDP SET -- 40/2 6
4. KDP SET -- 40/3 8
5. PRINTER CABINETS -- 80- AND 132-COLUMN 10

C. COMPONENTS
1. 40PSU101 POWER SUPPLY 11
2. 40MN101/AA DISPLAY MONITOR 12
3. 40P201/ZZ 132-COLUMN TRACTOR FEED PRINTER 14/15
4. 40P101/ZZ 80-COLUMN FRICTION FEED PRINTER 16
5. 40P151/ZZ 80-COLUMN TRACTOR FEED PRINTER 17
6. 40K101/CAK OPERATOR CONSOLE 18

D. CABLE ASSEMBLIES
1. 341893 MONITOR EXTENSION CABLE ASSEMBLY 19
2. 341895 PRINTER EXTENSION CABLE ASSEMBLY 20
3. 341896 CABLE ASSEMBLY 21
4. 345603 INTERFACE CABLE ASSEMBLY -- KD, KDP, KD-ROP (40/3 ONLY) . . . 22
5. 345613 INTERFACE CABLE ASSEMBLY -- KD AND ROP OR KDP AND ROP (40/3 ONLY) 23
6. 401640 PRINTER EXTENSION CABLE ASSEMBLY (ROP TERMINAL) 24
7. 401641 OPCON CABLE ASSEMBLY 25
8. 403404 ANSWER-BACK CABLE ASSEMBLY 26
9. 402178* CABLE ASSEMBLY 27
10. 403399** ATTENDANT SELECTABLE FEATURE -- 40/2 APPLICATION 27
11. 403378 CABLE ASSEMBLY -- 40/2 APPLICATION 28
12. 402180 MODIFICATION KIT -- 40/2 APPLICATION 29
13. LOOP CURRENT APPLICATIONS WITHOUT DATA SET -- 40/2 APPLICATION . . . 30

PART 5 — WIRING DIAGRAMS

A. GENERAL

The following are the wiring diagrams referred to in PART 4 -- TROUBLESHOOTING. This part (PART 5) contains wiring for the following:

Sets or Stations

Receive-Only Printer (ROP)
Keyboard Display (KD)
Keyboard Display Printer (KDP)

Components

Power Supply (40PSU101)
Operator Console (40K101/CAK)
Monitor (40MN101/AA)
Printers:

a. Friction Feed (40P101/ZZ)
b. Tractor Feed (40P151/ZZ) -- 6-Lines Per Inch
c. Tractor Feed (40P152/ZZ) -- 8-Lines Per Inch

The ROP, KD, and KDP drawings give the complete wiring between the various components. The components are shown as blocks and are labeled accordingly. If it becomes necessary to check the wiring of one of the above listed components, the page number for that drawing will be given in the appropriate block on the station drawing on which it appears. Not given are drawings of the wired frames for the controller(s) and display logic. These will not be found in this publication.

Where possible small notes indicating voltage levels have been added to aid in trouble locating. The location of any plug or cable can be attained by referring to PART 7 -- COMPONENT ACCESS.

CAUTION: WHENEVER WORK ON THE MONITOR IS TO BE DONE, SAFETY GLASSES SHOULD BE WORN. ALSO THE HIGH VOLTAGE LEAD TO THE CRT SHOULD NEVER BE PROBED.

B. SETS OR STATIONS

1. ROP CABINET

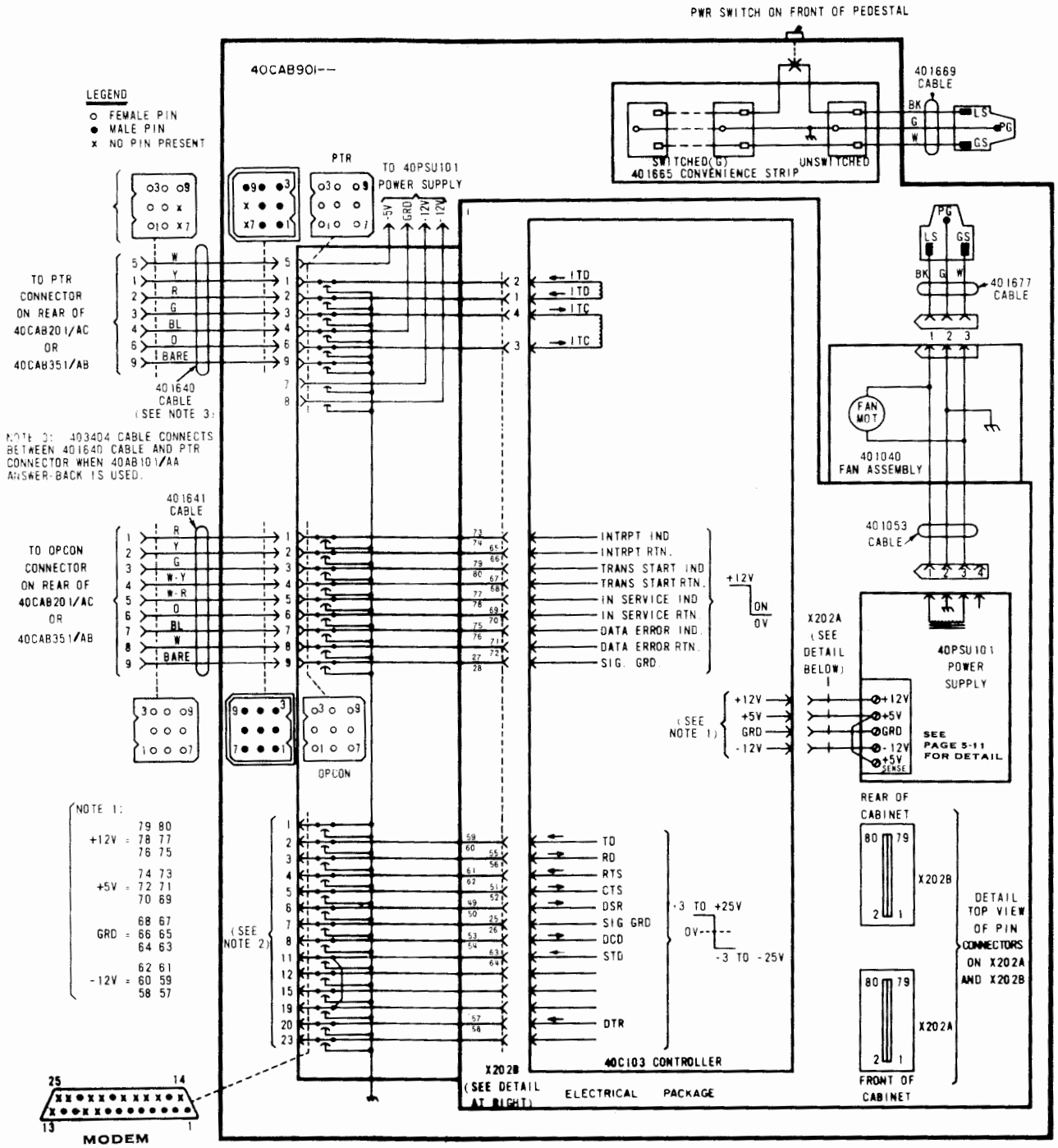

NOTE 2: TO 341896 INTERFACE CABLE (ROP), 341895 PRINTER CABLE (KD AND ROP), OR 345613 INTERFACE CABLE (KD AND ROP OR KDP AND ROP).

B. SETS OR STATIONS (Cont)

2. KDP SET -- 40/1

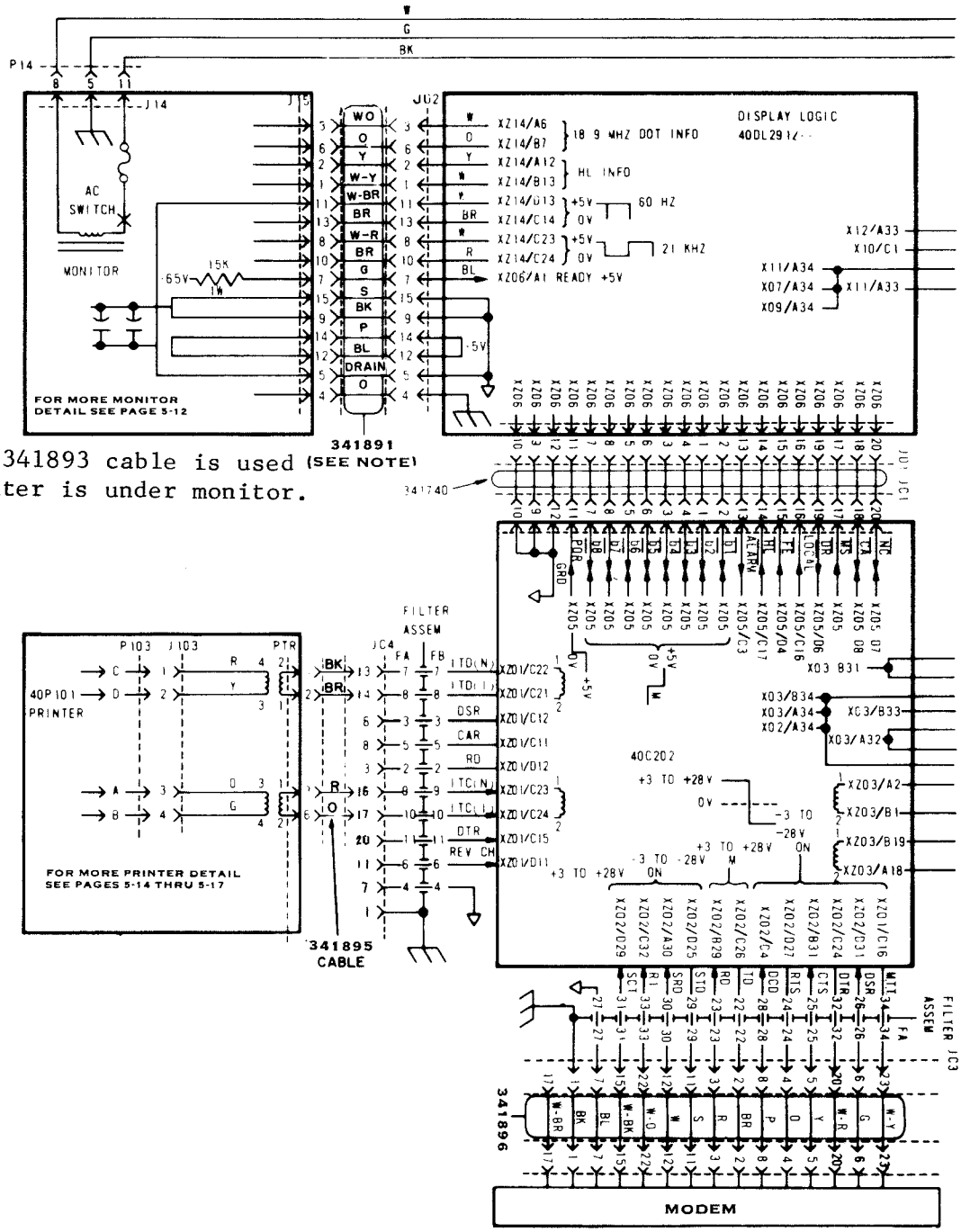

NOTE: 341893 cable is used if printer is under monitor.

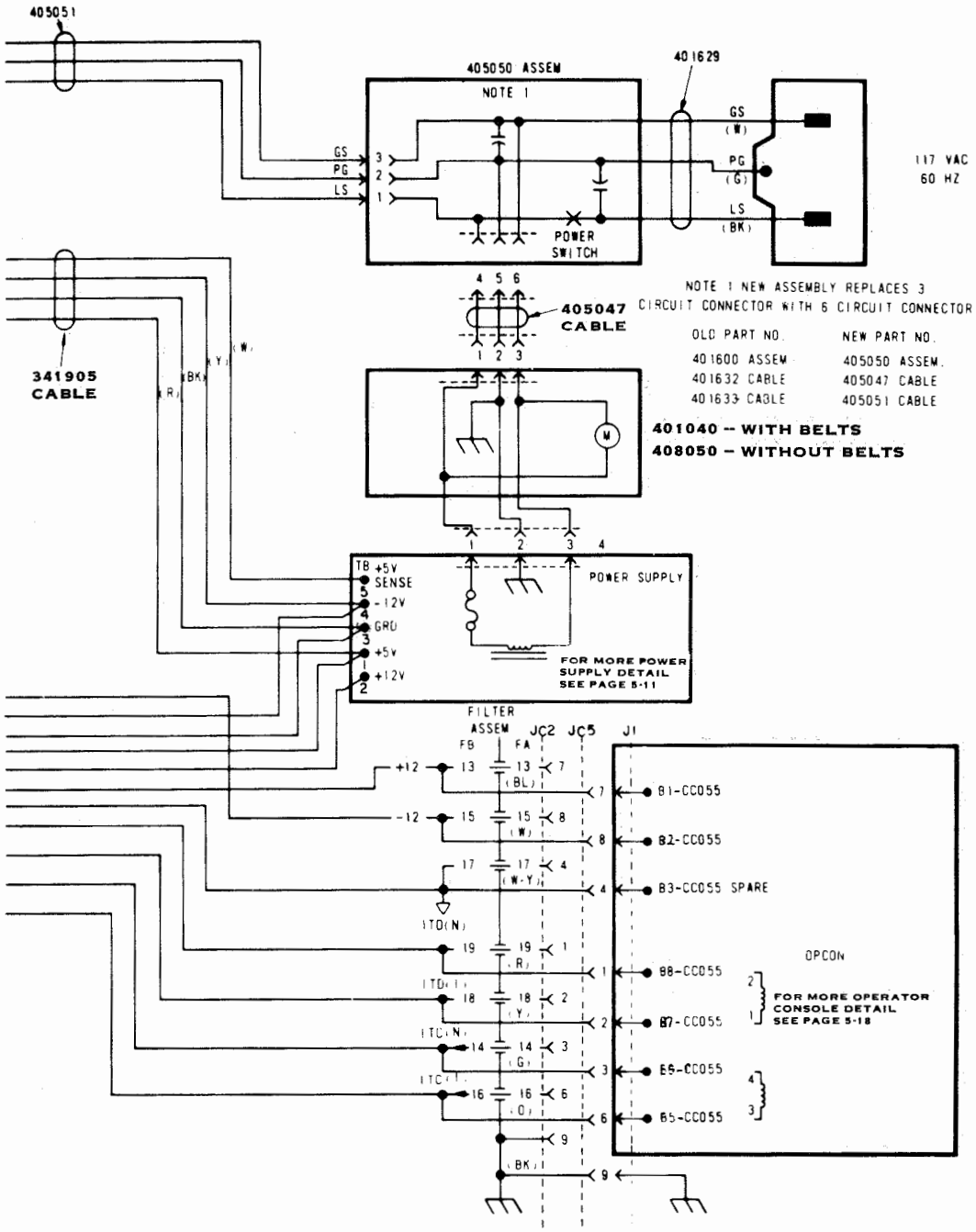
405051
405050 ASSEM
NOTE 1
401629
GS
PG
LS
POWER SWITCH
117 VAC
60 HZ
NOTE 1 NEW ASSEMBLY REPLACES 3 CIRCUIT CONNECTOR WITH 6 CIRCUIT CONNECTOR
OLD PART NO. NEW PART NO.
401600 ASSEM 405050 ASSEM.
401632 CABLE 405047 CABLE
401633 CABLE 405051 CABLE
405047 CABLE
341905 CABLE
401040 -- WITH BELTS
408050 -- WITHOUT BELTS
TB +5V SENSE
-12V
GRD
+5V
+12V
POWER SUPPLY
FOR MORE POWER SUPPLY DETAIL SEE PAGE 5-11
FILTER ASSEM
JC2 JC5 J1
+12
-12
ITD(N)
ITD(1)
ITC(N)
ITC(1)
B1-CC055
B2-CC055
B3-CC055 SPARE
B8-CC055
B7-CC055
B5-CC055
B6-CC055
OPCON
FOR MORE OPERATOR CONSOLE DETAIL SEE PAGE 5-18

B. SETS OR STATIONS (Cont)

3. KDP SET -- 40/2

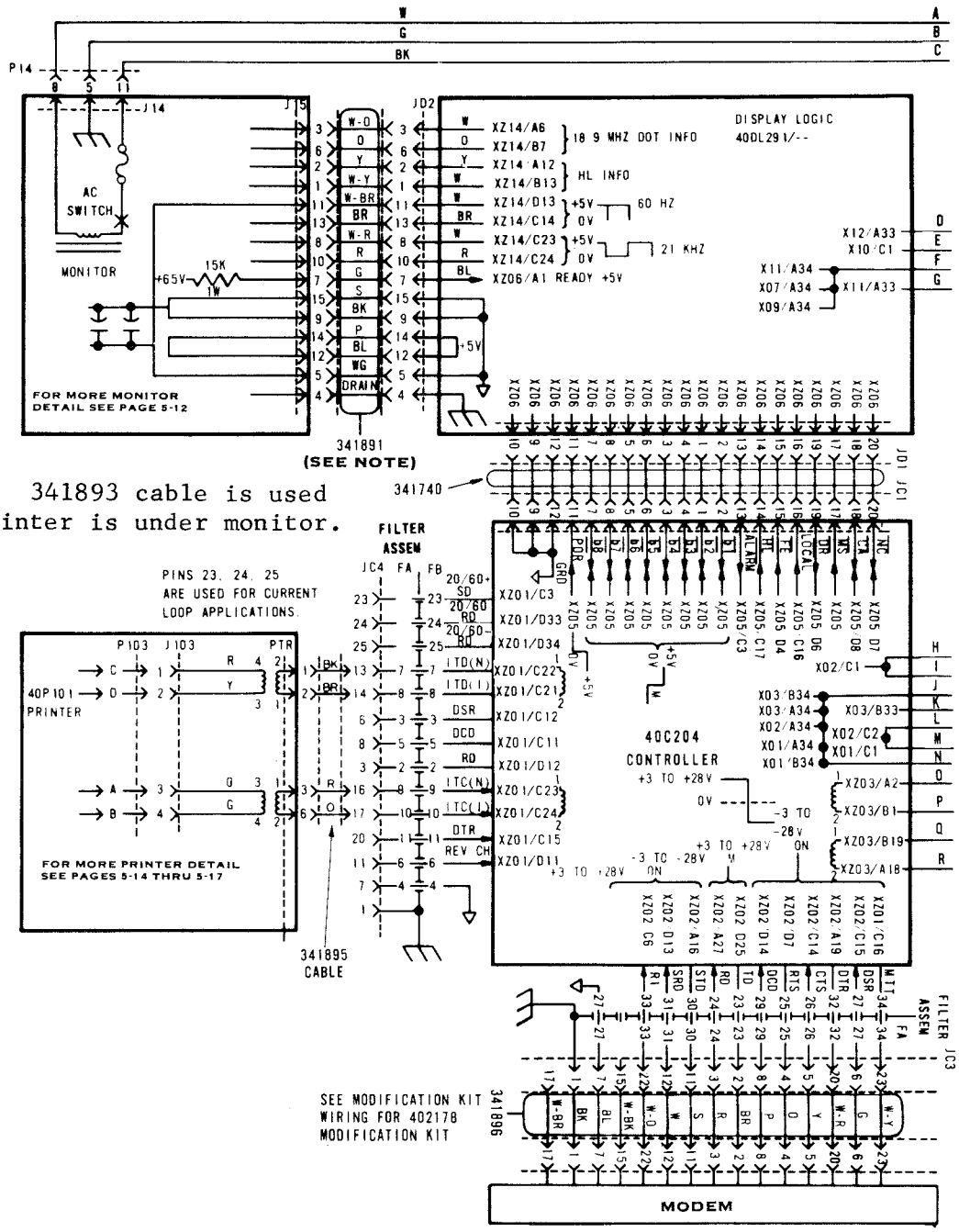

NOTE: 341893 cable is used if printer is under monitor.

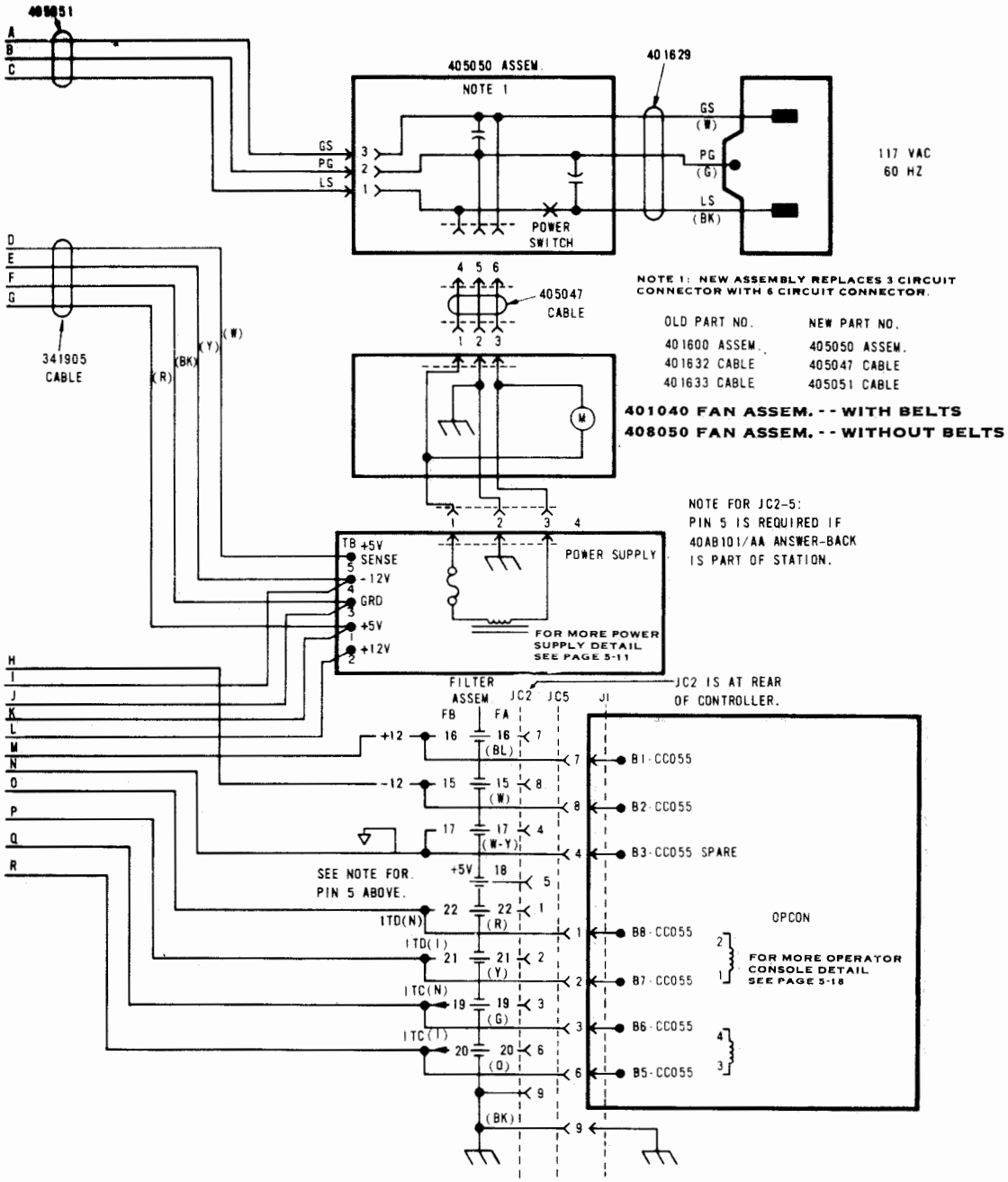
405051
A
B
C
405050 ASSEM.
NOTE 1
401629
GS
PG
LS
POWER SWITCH
GS (W)
PG (G)
LS (BK)
117 VAC
60 HZ
D
E
F
G
341905 CABLE
405047 CABLE
NOTE 1: NEW ASSEMBLY REPLACES 3 CIRCUIT CONNECTOR WITH 6 CIRCUIT CONNECTOR.
OLD PART NO. NEW PART NO.
401600 ASSEM. 405050 ASSEM.
401632 CABLE 405047 CABLE
401633 CABLE 405051 CABLE
401040 FAN ASSEM. - - WITH BELTS
408050 FAN ASSEM. - - WITHOUT BELTS
NOTE FOR JC2-5:
PIN 5 IS REQUIRED IF
40AB101/AA ANSWER-BACK
IS PART OF STATION.
TB +5V SENSE
-12V
GRD
+5V
+12V
POWER SUPPLY
FOR MORE POWER SUPPLY DETAIL SEE PAGE 5-11
H
I
J
K
L
M
N
O
P
Q
R
FILTER ASSEM.
JC2 IS AT REAR OF CONTROLLER.
JC2 JC5 J1
FB FA
+12
-12
SEE NOTE FOR PIN 5 ABOVE.
ITD(N)
ITD(I)
ITC(N)
ITC(I)
B1-CC055
B2-CC055
B3-CC055 SPARE
B8-CC055
B7-CC055
B6-CC055
B5-CC055
OPCON
FOR MORE OPERATOR CONSOLE DETAIL SEE PAGE 5-18

B. SETS OR STATIONS (Cont)

4. KDP SET -- 40/3

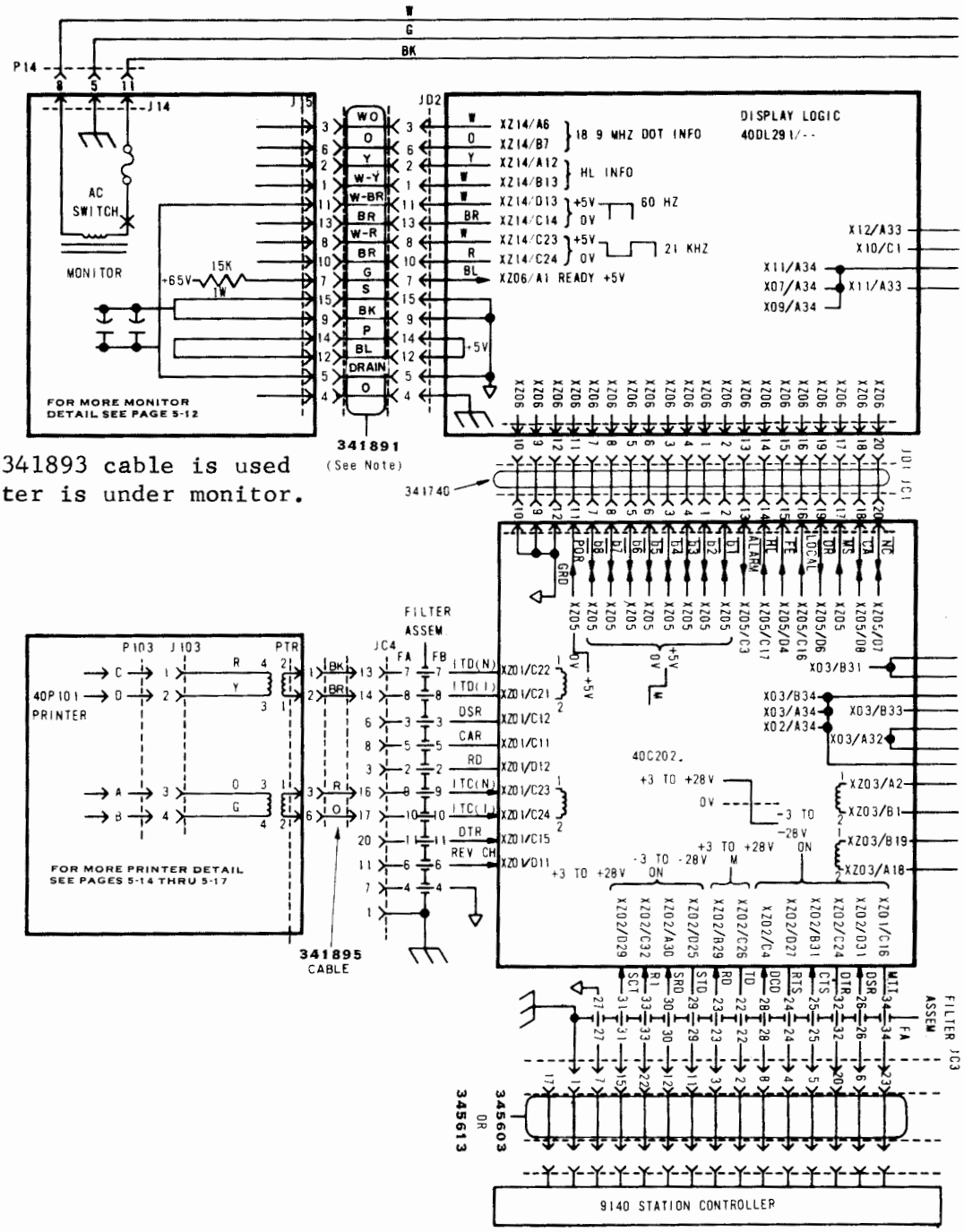

NOTE: 341893 cable is used if printer is under monitor.

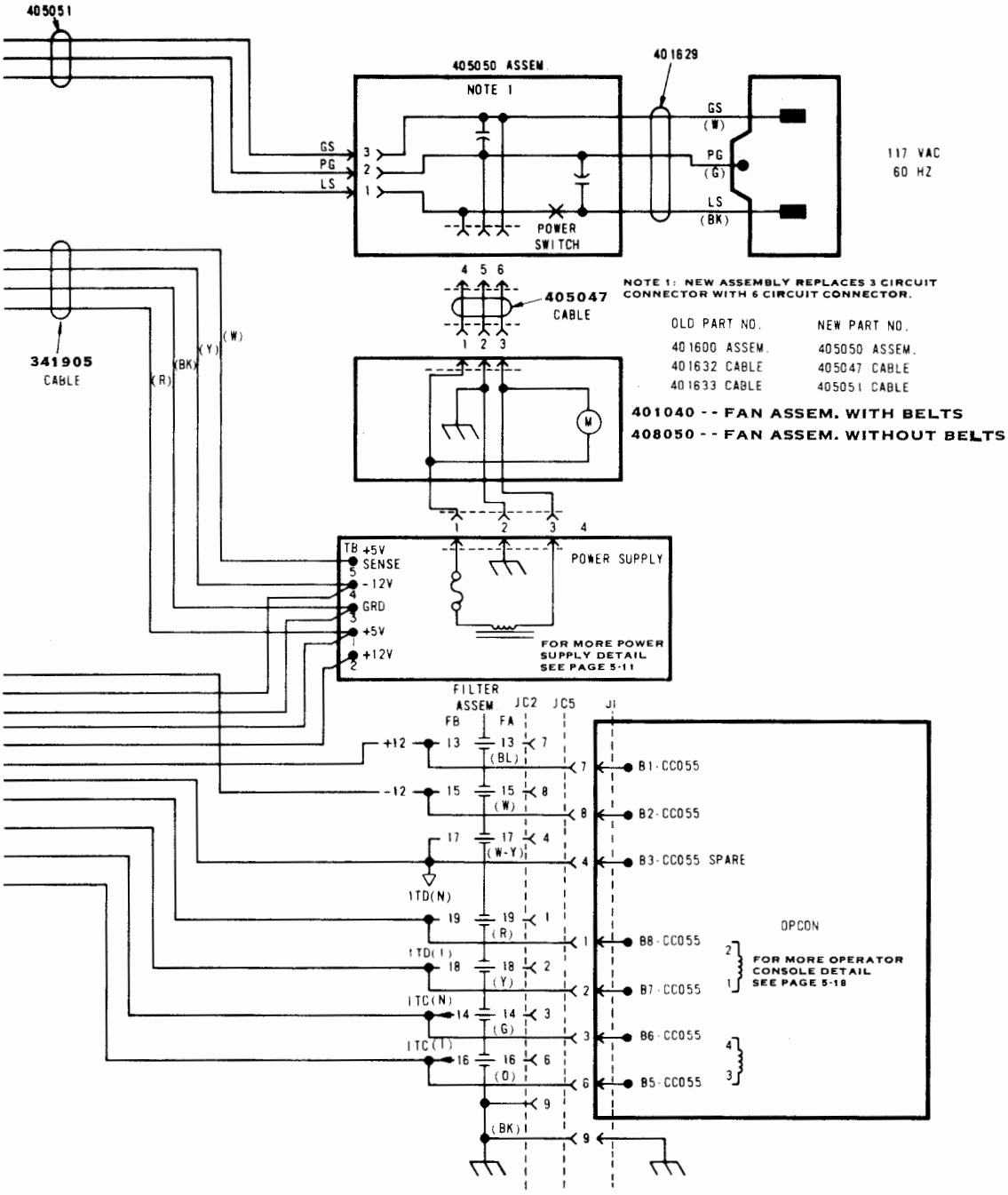
405051
405050 ASSEM.
NOTE 1
401629
GS
PG
LS
POWER SWITCH
117 VAC
60 HZ
405047
CABLE
NOTE 1: NEW ASSEMBLY REPLACES 3 CIRCUIT CONNECTOR WITH 6 CIRCUIT CONNECTOR.
OLD PART NO. NEW PART NO.
401600 ASSEM. 405050 ASSEM.
401632 CABLE 405047 CABLE
401633 CABLE 405051 CABLE
401040 - - FAN ASSEM. WITH BELTS
408050 - - FAN ASSEM. WITHOUT BELTS
341905
CABLE
POWER SUPPLY
TB +5V
SENSE
-12V
GRD
+5V
+12V
FOR MORE POWER SUPPLY DETAIL SEE PAGE 5-11
FILTER ASSEM
JC2
JC5
J1
B1-CC055
B2-CC055
B3-CC055 SPARE
B8-CC055
B7-CC055
B6-CC055
B5-CC055
OPCON
FOR MORE OPERATOR CONSOLE DETAIL SEE PAGE 5-18

B. SETS OR STATIONS (Cont)

5. PRINTER CABINETS -- 80- AND 132-COLUMN

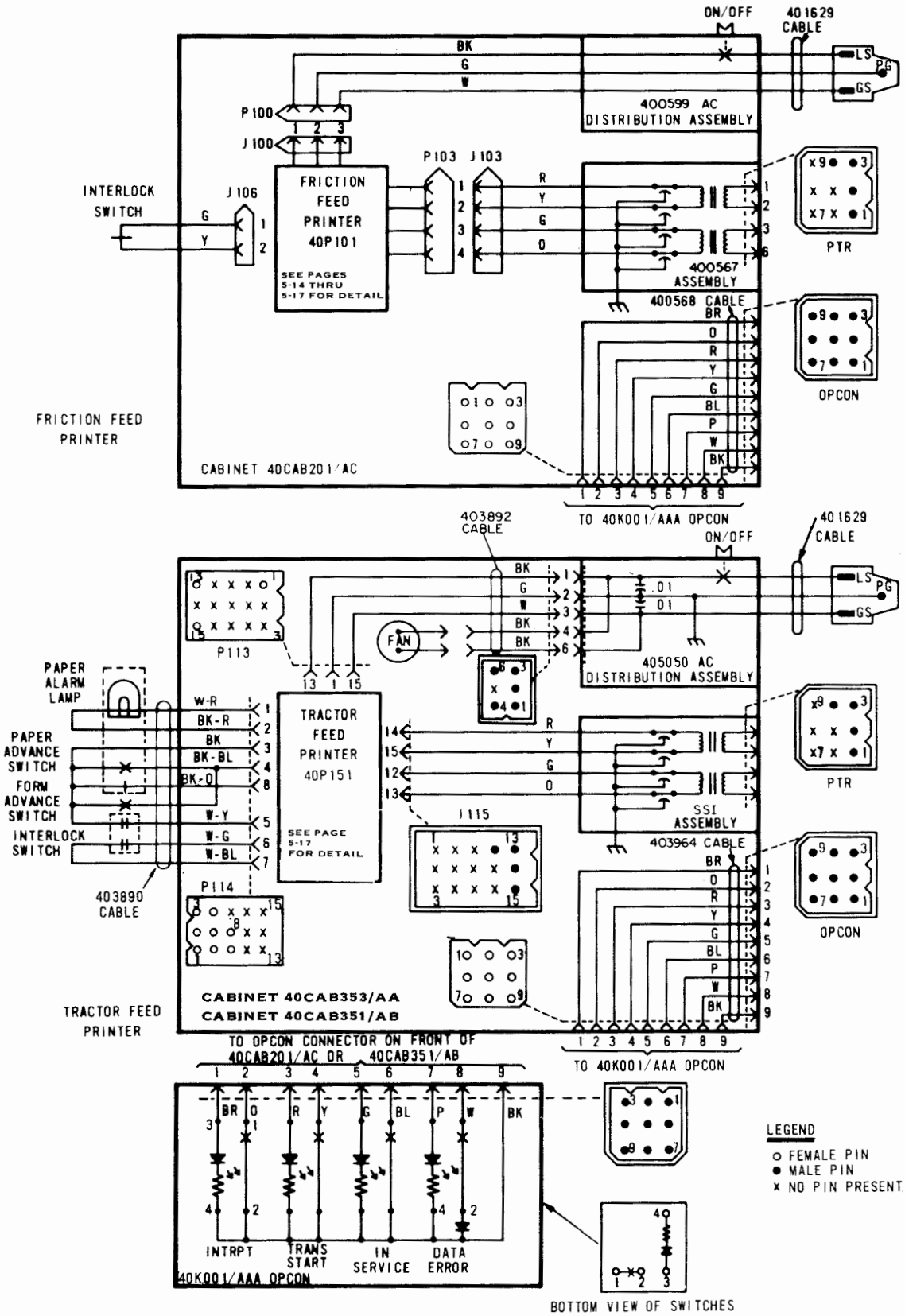

C. COMPONENTS

1. 40PSU101 POWER SUPPLY

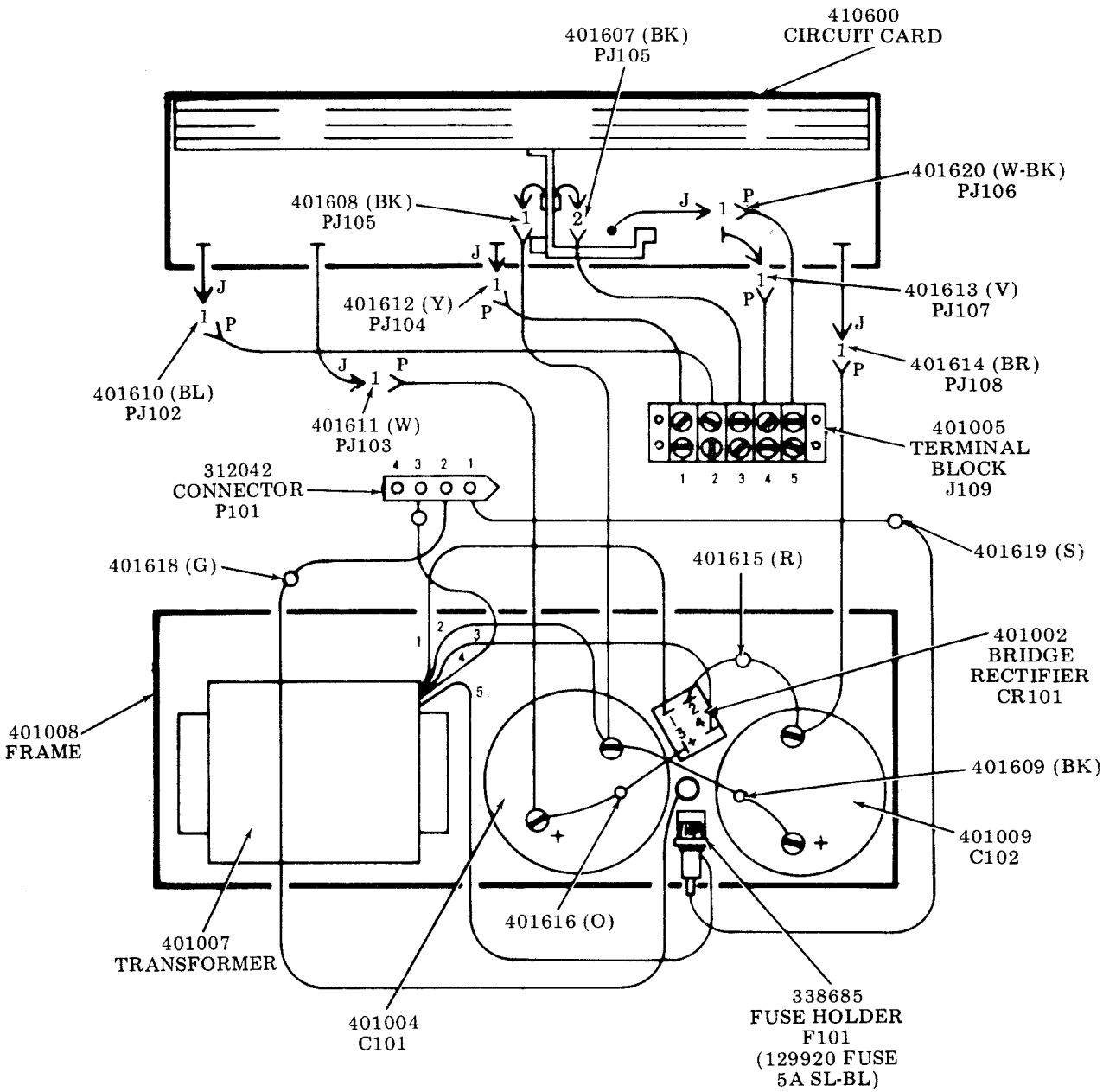

C. COMPONENTS (Cont)

2. 40MN101/AA DISPLAY MONITOR

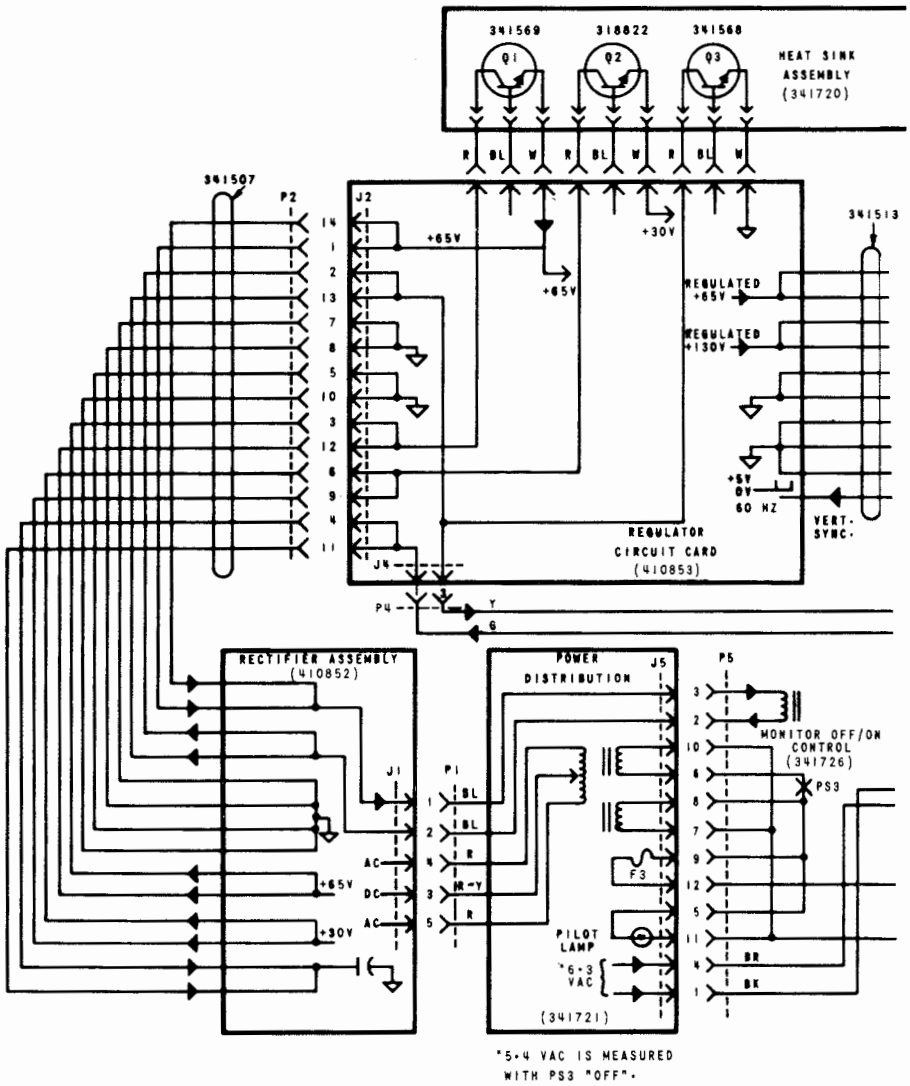

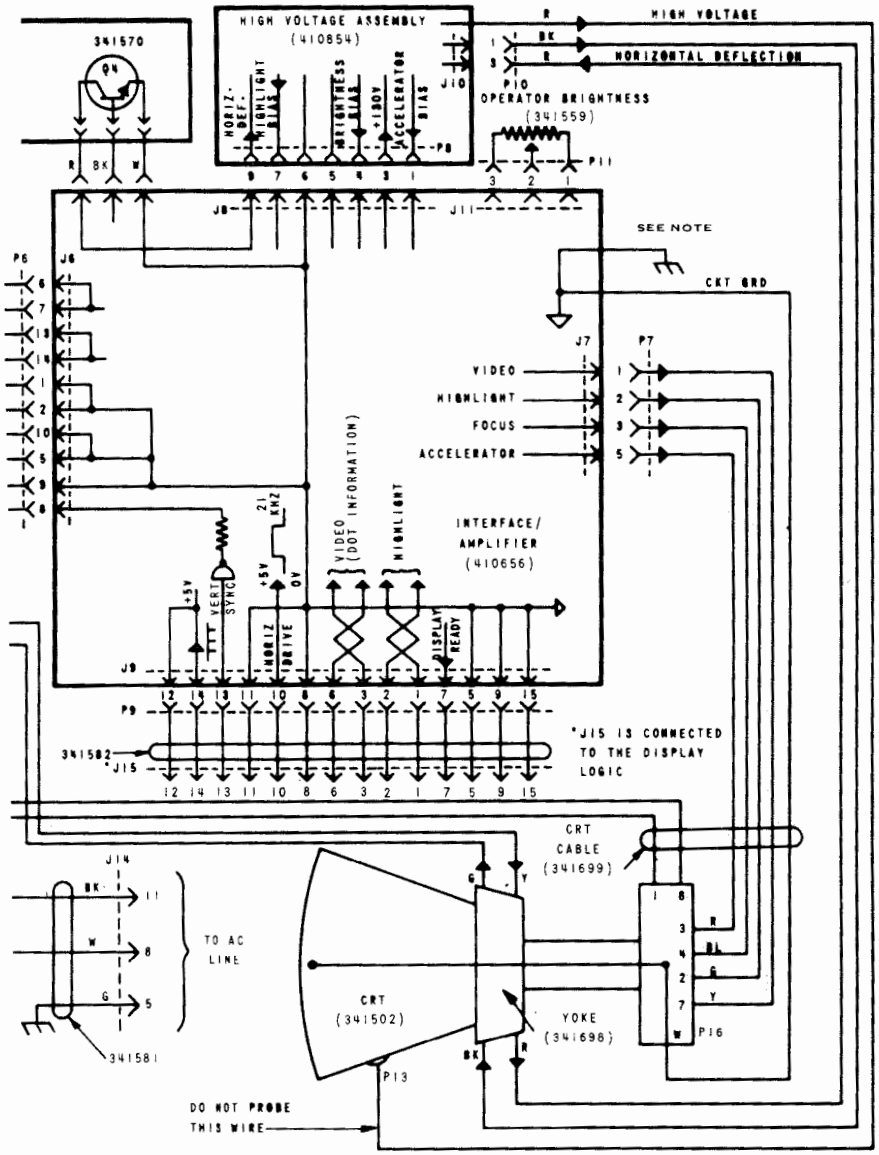

NOTE: For early design monitor and power supply (40MN101 and 40PSU101 serial numbers below 10,000) frame ground was applied in the monitor. In current design, frame ground is applied in the power supply. Early design is not compatible with current design. Modification Kit 403594 enables updating of early design monitor for compatibility.

C. COMPONENTS (Cont)

3. 40P201/ZZ 132-COLUMN TRACTOR FEED PRINTER

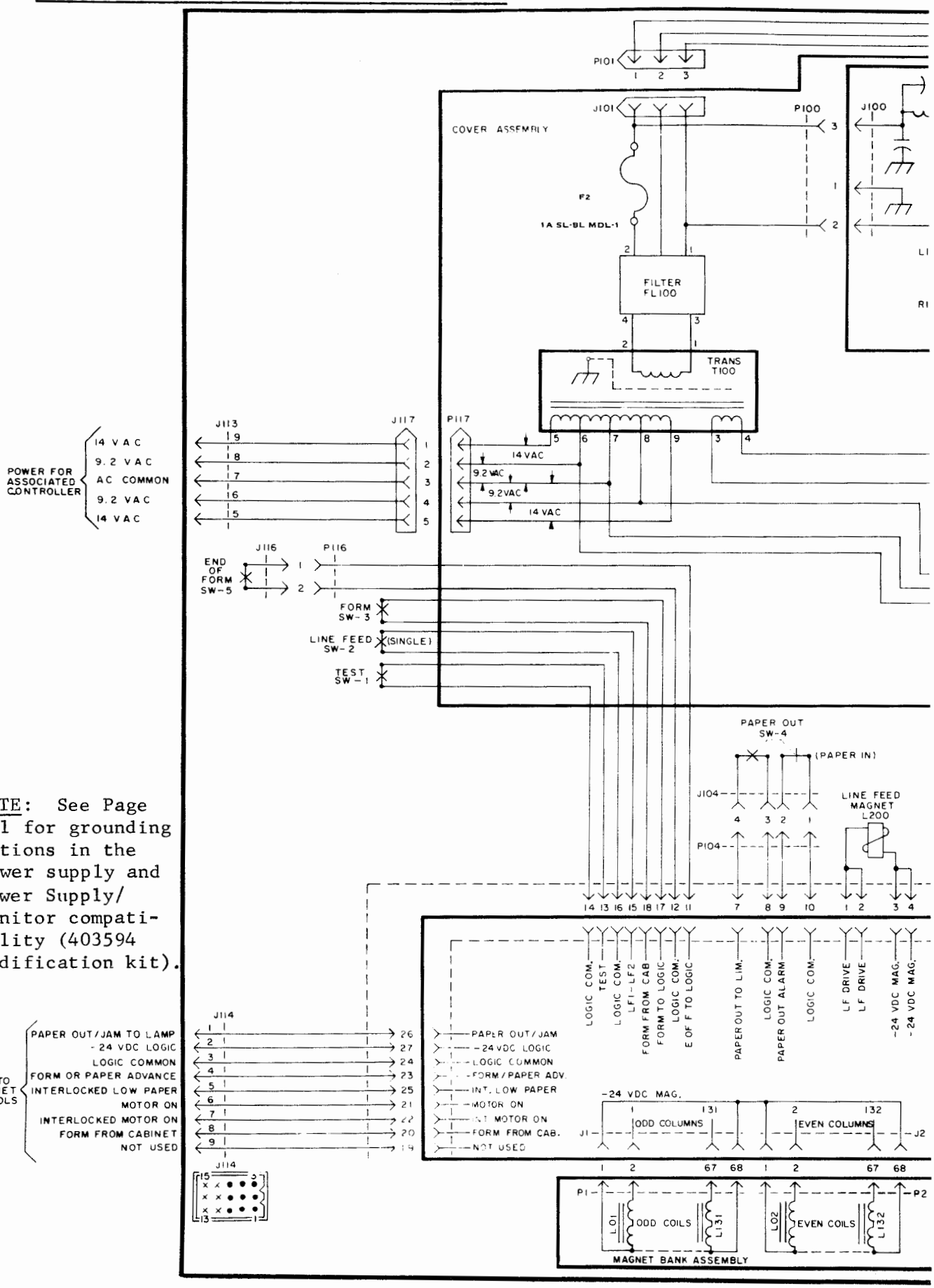

NOTE: See Page 9-1 for grounding options in the power supply and Power Supply/ Monitor compatibility (403594 Modification kit).

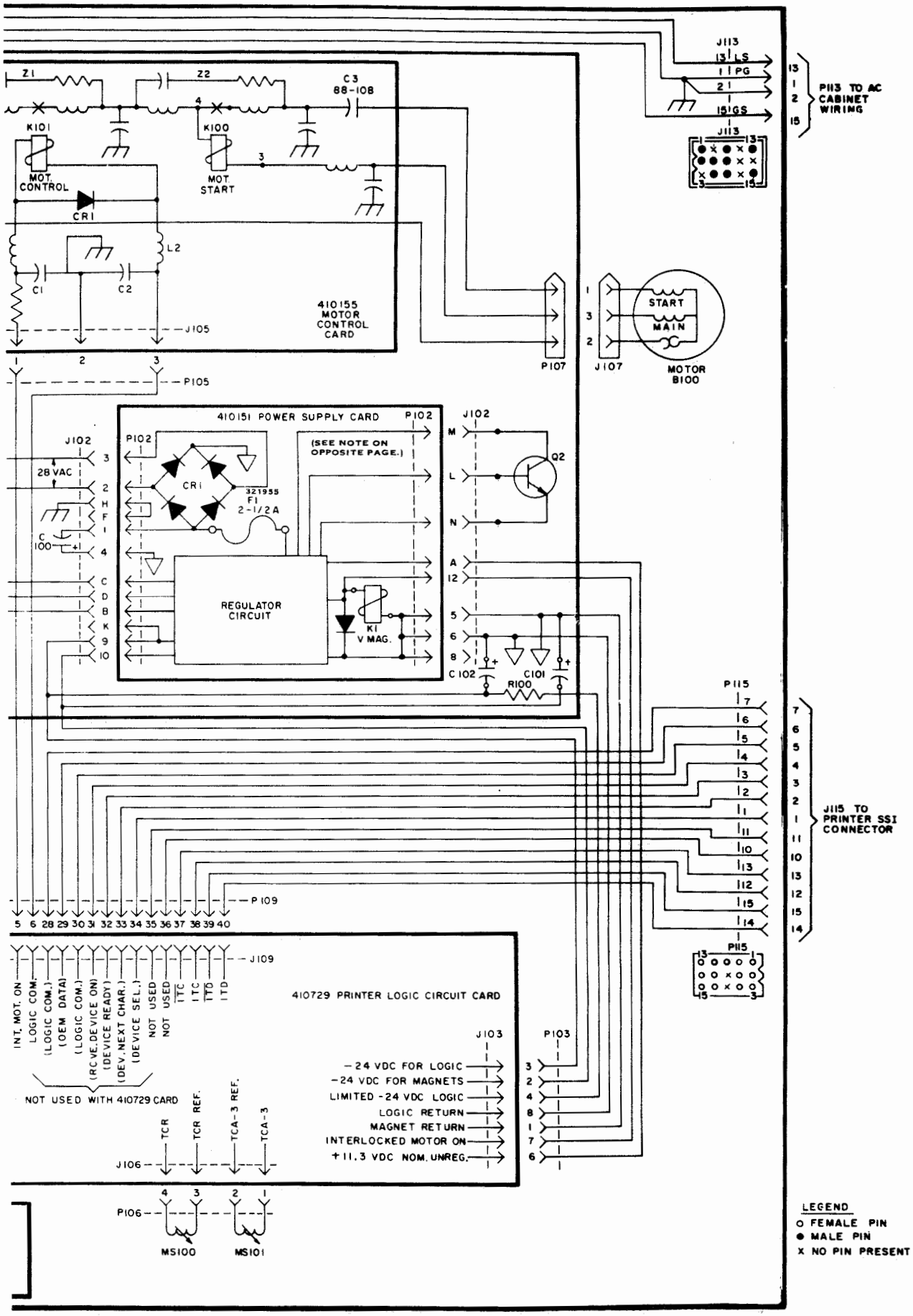
J113
LS
PG
GS
P113 TO AC CABINET WIRING
Z1
Z2
C3 88-108
K101
MOT. CONTROL
K100
MOT START
CR1
L2
C1
C2
J105
410155 MOTOR CONTROL CARD
P107
J107
START
MAIN
MOTOR B100
P105
410151 POWER SUPPLY CARD
P102
J102
28 VAC
C 100
CR1
321955
F1
2-1/2 A
(SEE NOTE ON OPPOSITE PAGE.)
Q2
REGULATOR CIRCUIT
K1
V MAG.
C102
R100
C101
P115
J115 TO PRINTER SSI CONNECTOR
P109
J109
INT. MOT. ON
LOGIC COM.
(LOGIC COM.)
(OEM DATA)
(LOGIC COM.)
(RCVE. DEVICE ON)
(DEVICE READY)
(DEV. NEXT CHAR.)
(DEVICE SEL.)
NOT USED
NOT USED
ITC
ITC
ITD
ITD
NOT USED WITH 410729 CARD
410729 PRINTER LOGIC CIRCUIT CARD
J103
P103
-24 VDC FOR LOGIC
-24 VDC FOR MAGNETS
LIMITED -24 VDC LOGIC
LOGIC RETURN
MAGNET RETURN
INTERLOCKED MOTOR ON
+11.3 VDC NOM. UNREG.
TCR
TCR REF.
TCA-3 REF.
TCA-3
J106
P106
MS100
MS101
LEGEND
O FEMALE PIN
● MALE PIN
X NO PIN PRESENT

C. COMPONENTS (Cont)

4. 40P101/ZZ 80-COLUMN FRICTION FEED PRINTER

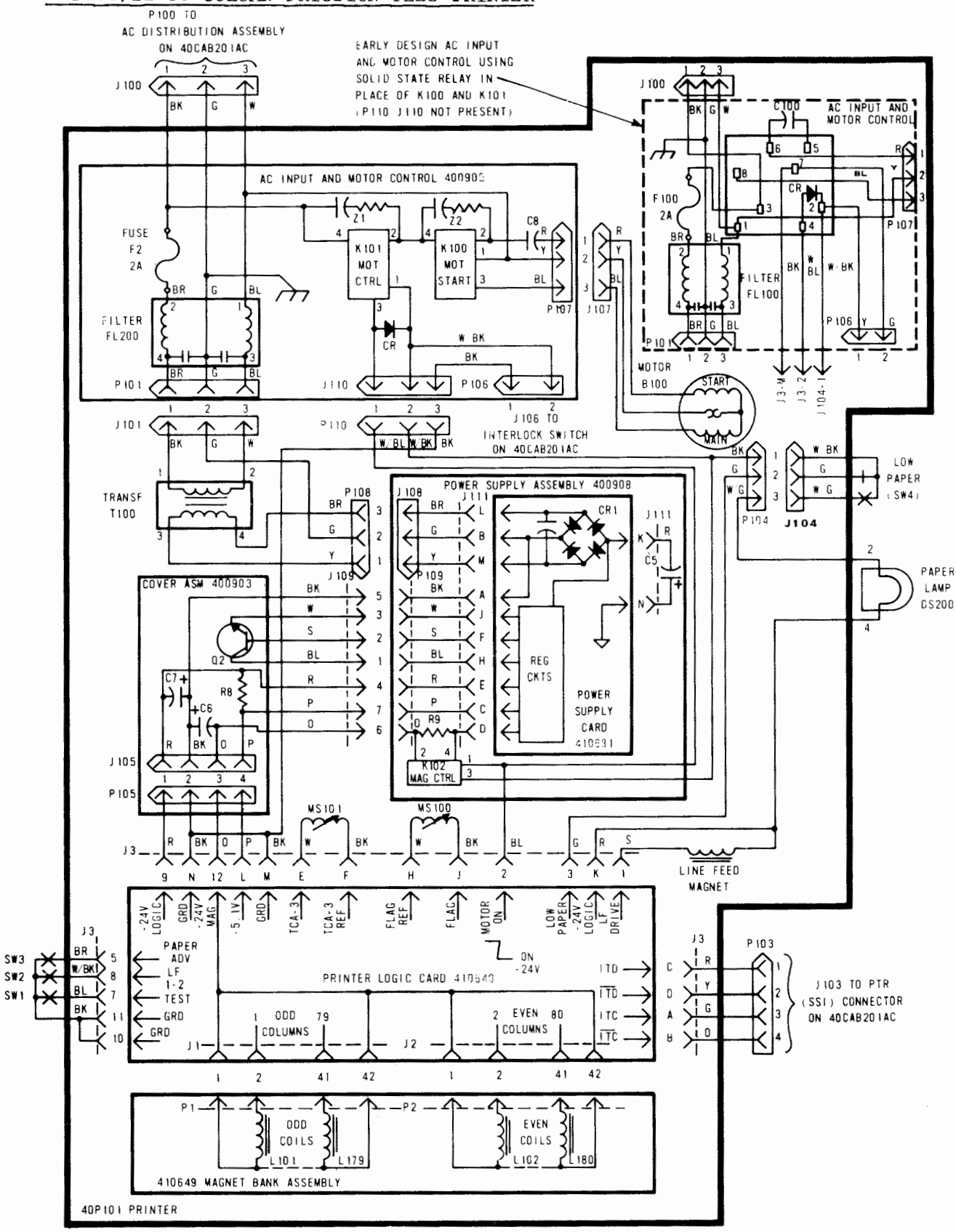

5. 40P151/ZZ 80-COLUMN TRACTOR FEED PRINTER

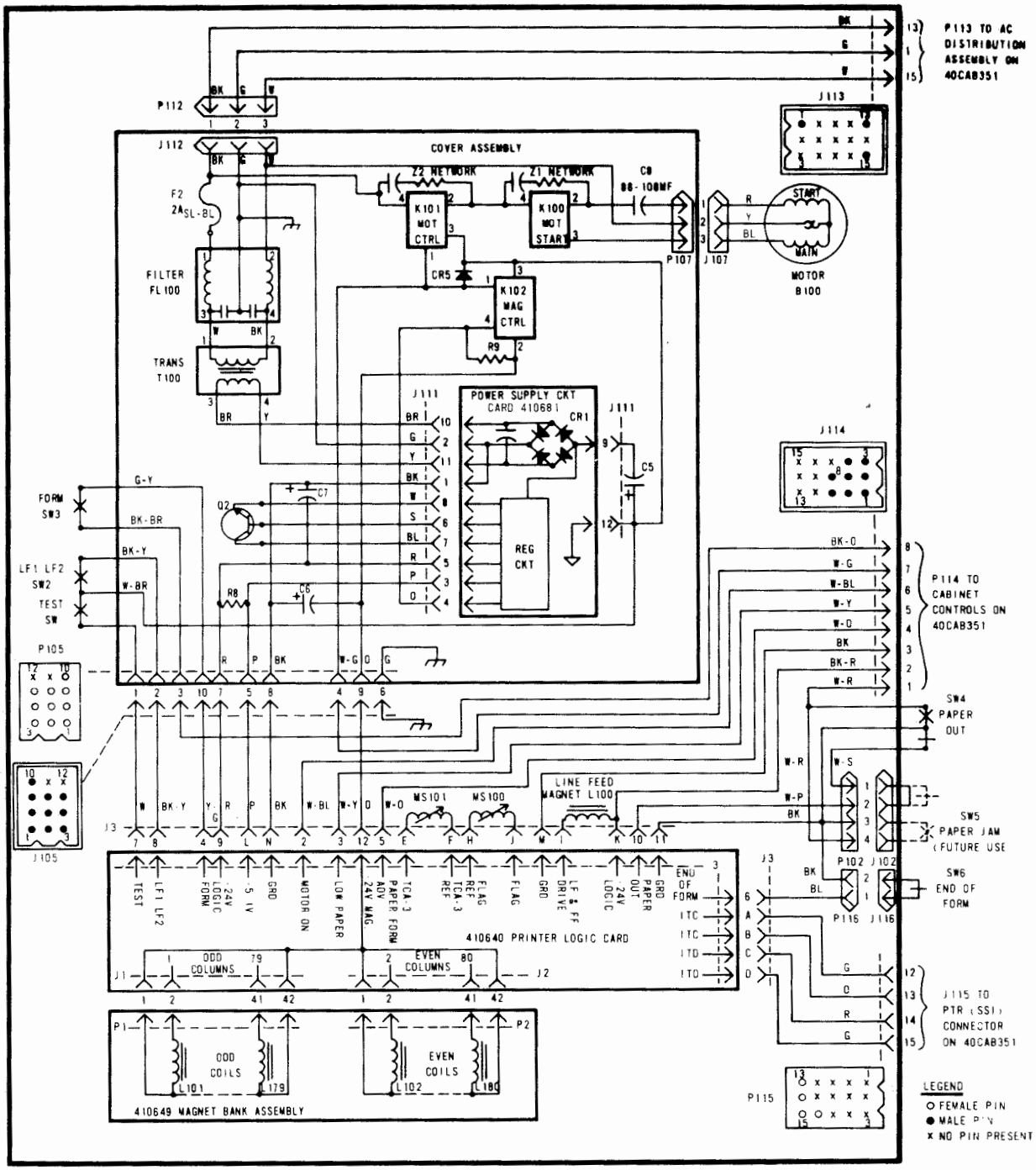

C. COMPONENTS (Cont)

6. 40K101/CAK OPERATOR CONSOLE

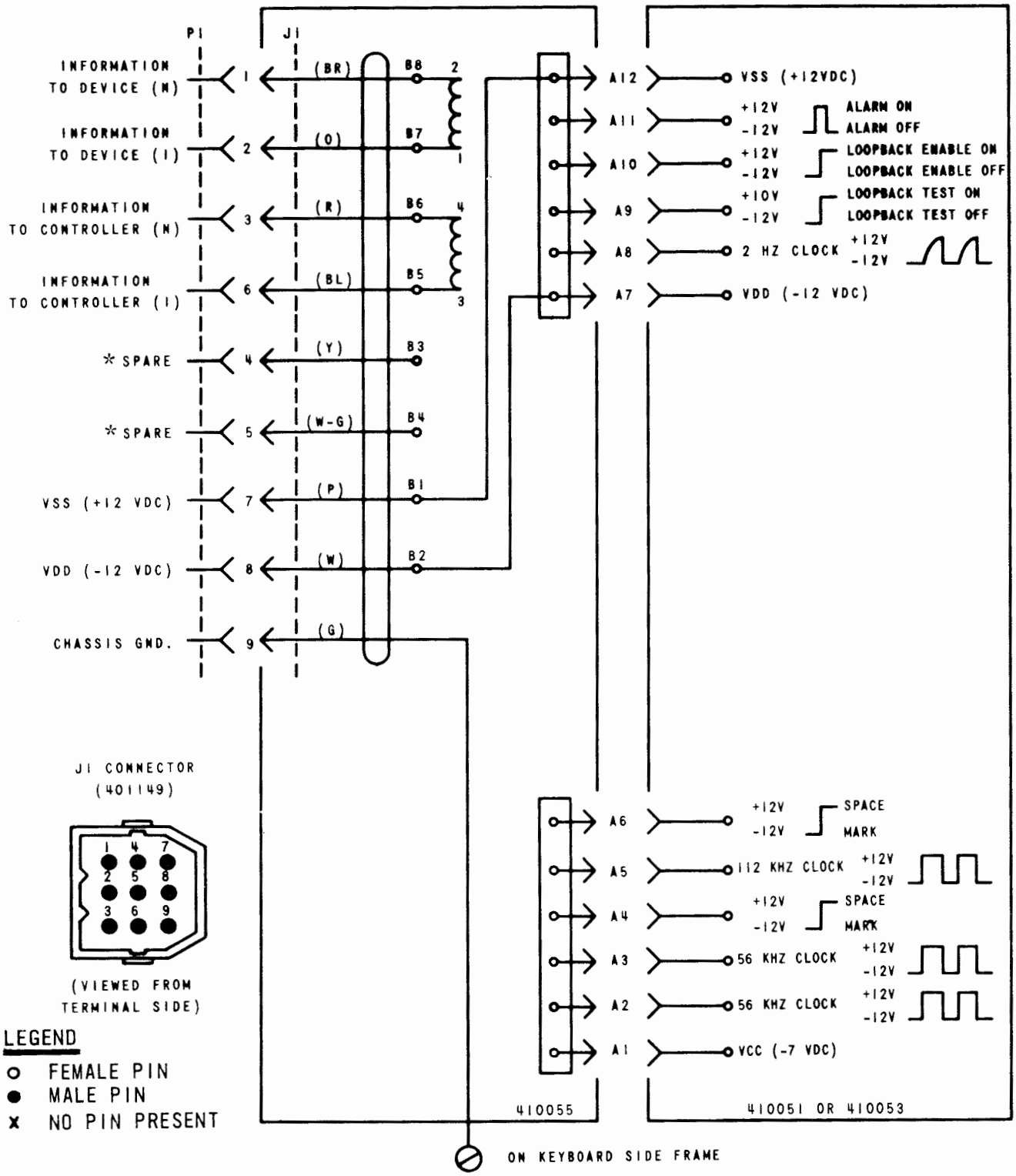

*Present on early units.

D. CABLE ASSEMBLIES

1. 341893 MONITOR EXTENSION CABLE ASSEMBLY

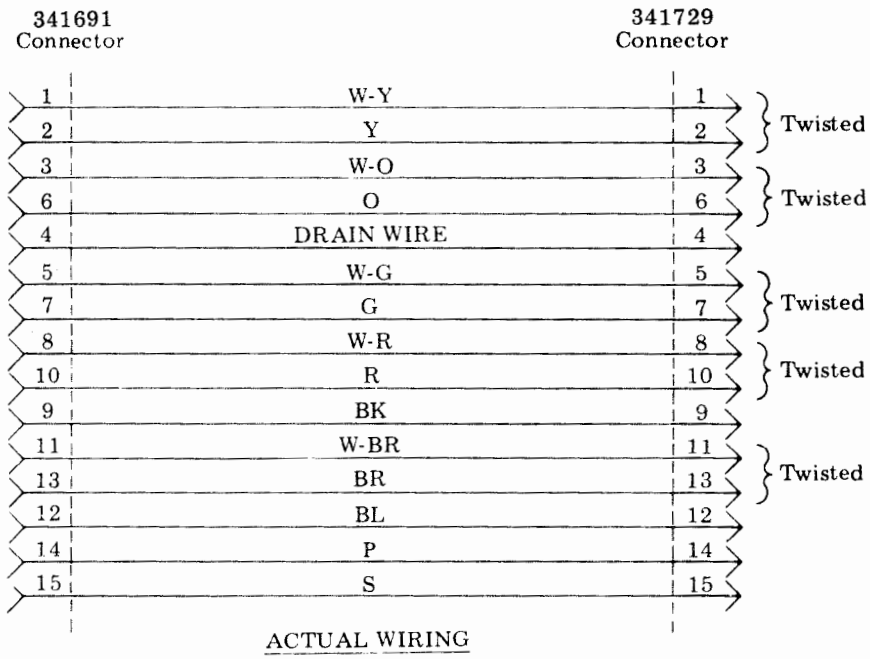

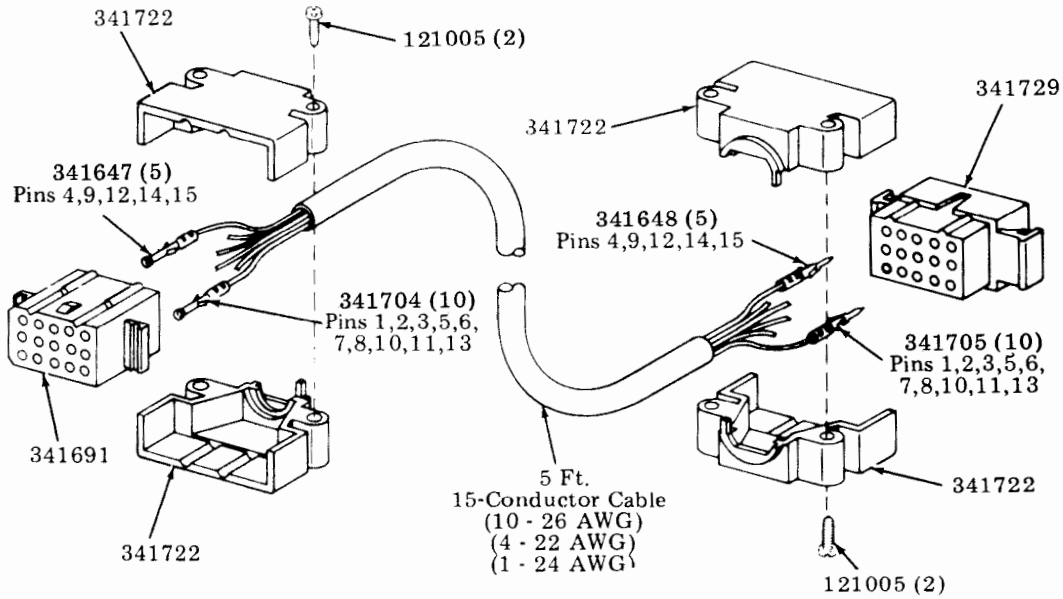

D. CABLE ASSEMBLIES (Cont)

2. 341895 PRINTER EXTENSION CABLE ASSEMBLY

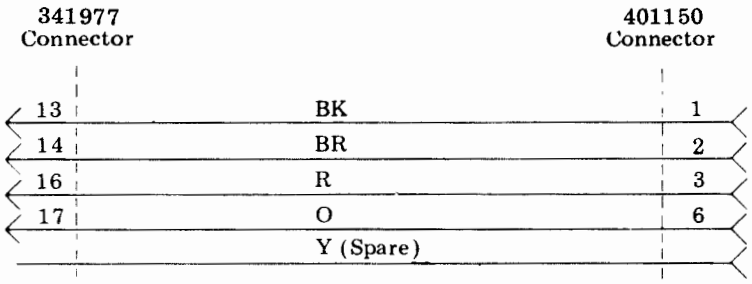

ACTUAL WIRING

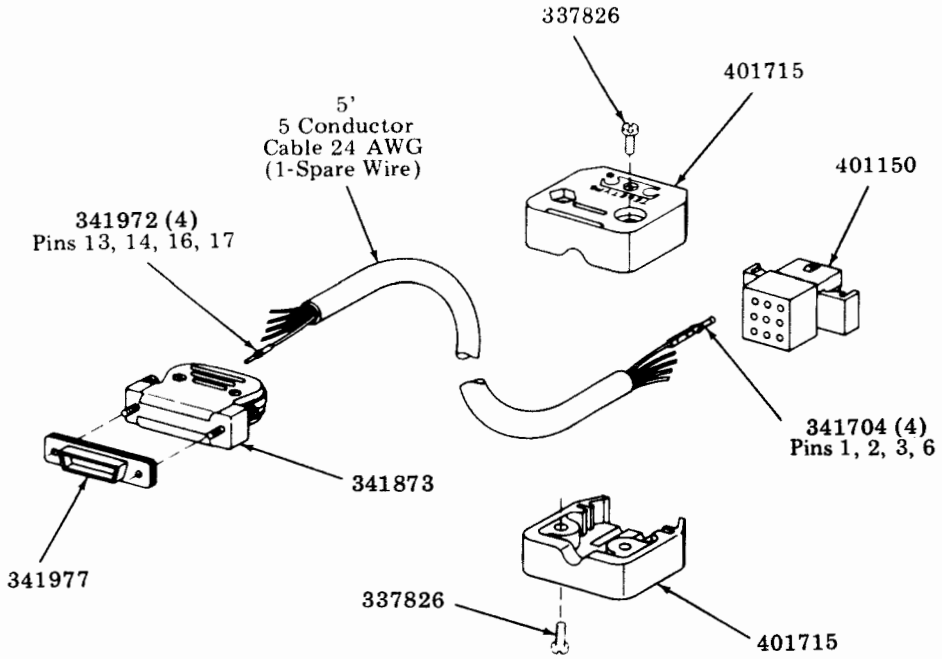

3. 341896 CABLE ASSEMBLY

341977 Connector		341978 Connector
1	BK	1
2	BR	2
3	R	3
4	O	4
5	Y	5
6	G	6
7	BL	7
8	P	8
11	S	11
12	W	12
15	W-BK	15
17	W-BR	17
20	W-R	20
22	W-O	22
23	W-Y	23

ACTUAL WIRING

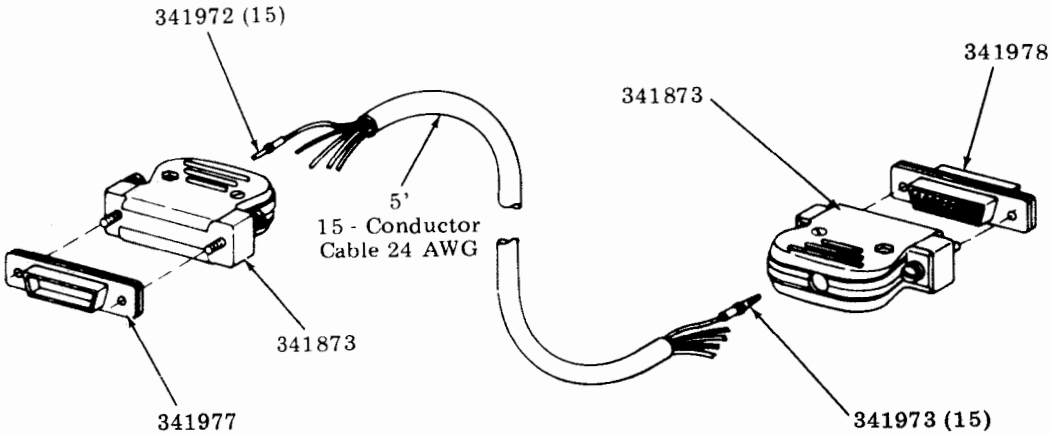

D. CABLE ASSEMBLIES (Cont)

4. 345603 INTERFACE CABLE ASSEMBLY -- KD, KDP, KD-ROP (40/3 ONLY)

341977 Connector (X)		341978 Connector (D)
1	BK	1
2	BR	2
3	R	3
4	O	4
5	Y	5
7	BL	7
8	P	8
11	W-BK	11
12	W-BR	12
13	W-R	13
14	W-O	22
15	W-Y	15
19	W-S	6
20	W-BK-BK	20
21	W-BK-BR	21
23	W-BK-O	23
25	W-BK-BL	25

ACTUAL WIRING

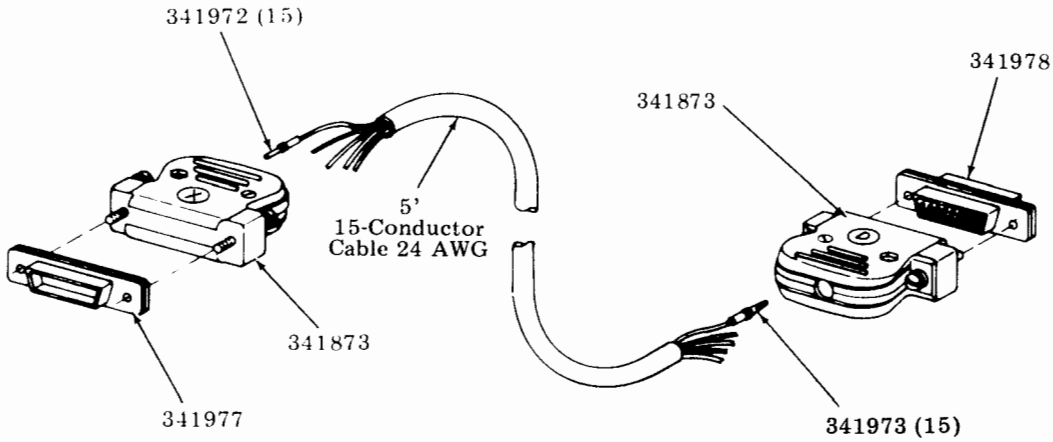

5. 345613 INTERFACE CABLE ASSEMBLY -- KD AND ROP OR KDP AND ROP (40/3 ONLY)

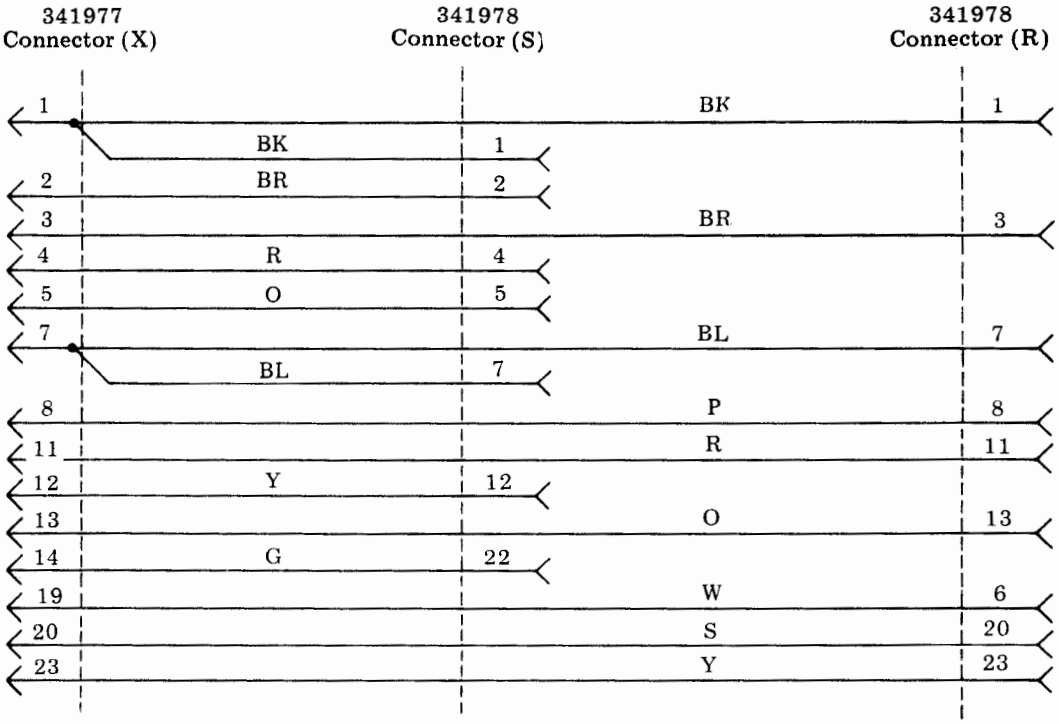

ACTUAL WIRING

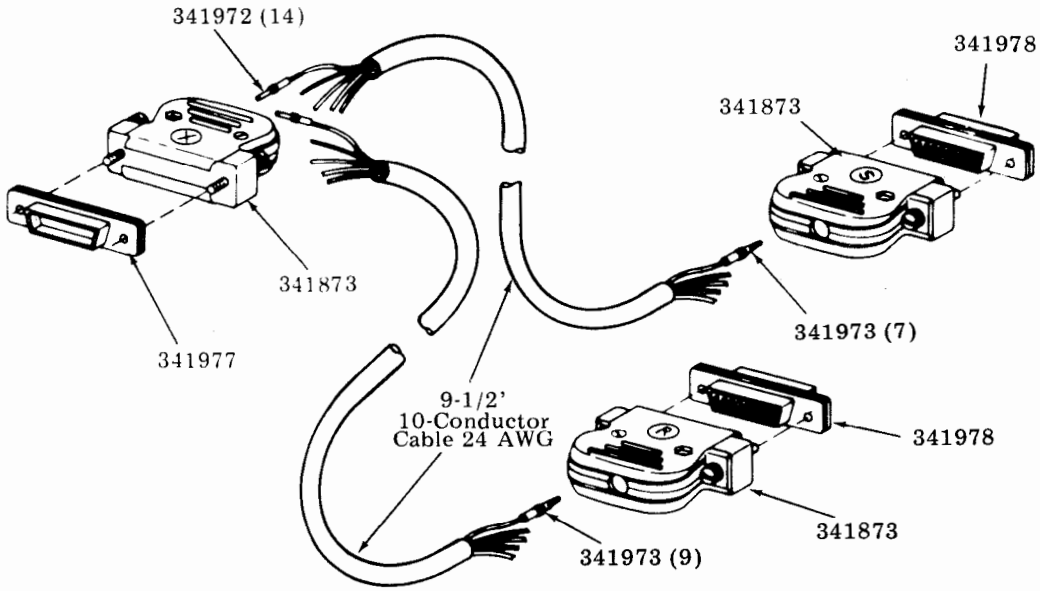

D. CABLE ASSEMBLIES (Cont)

6. 401640 PRINTER EXTENSION CABLE ASSEMBLY (ROP TERMINAL)

401623 Connector		401150 Connector
1	Y	1
2	R	2
3	G	3
4	BL	4
5	W	5
6	O	6
9	BARE	9

ACTUAL WIRING

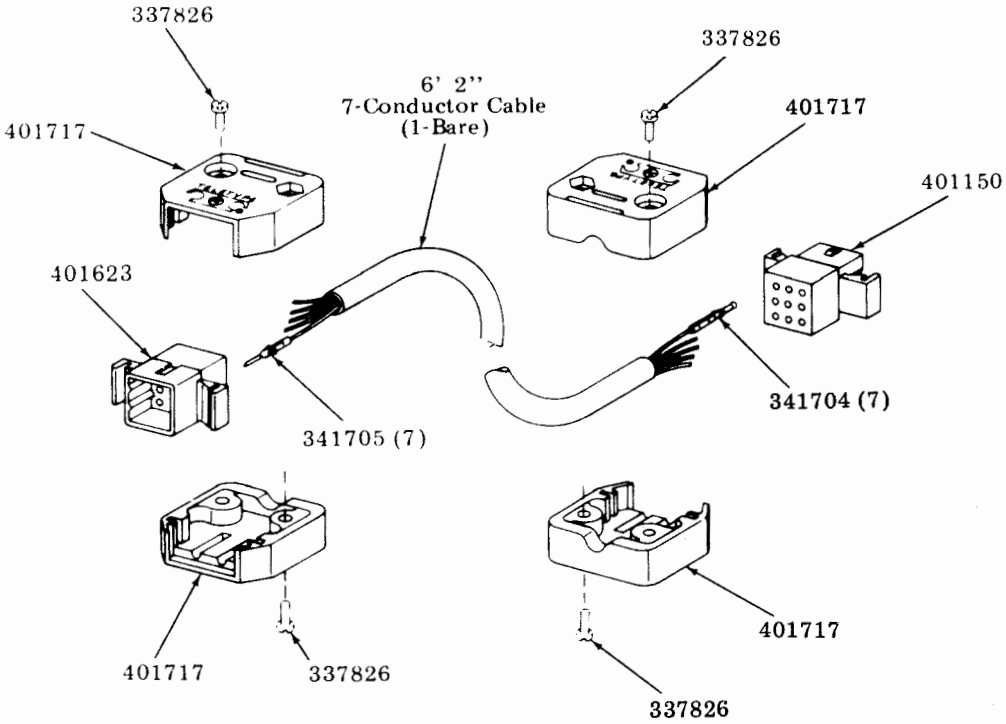

7. 401641 OPCON CABLE ASSEMBLY

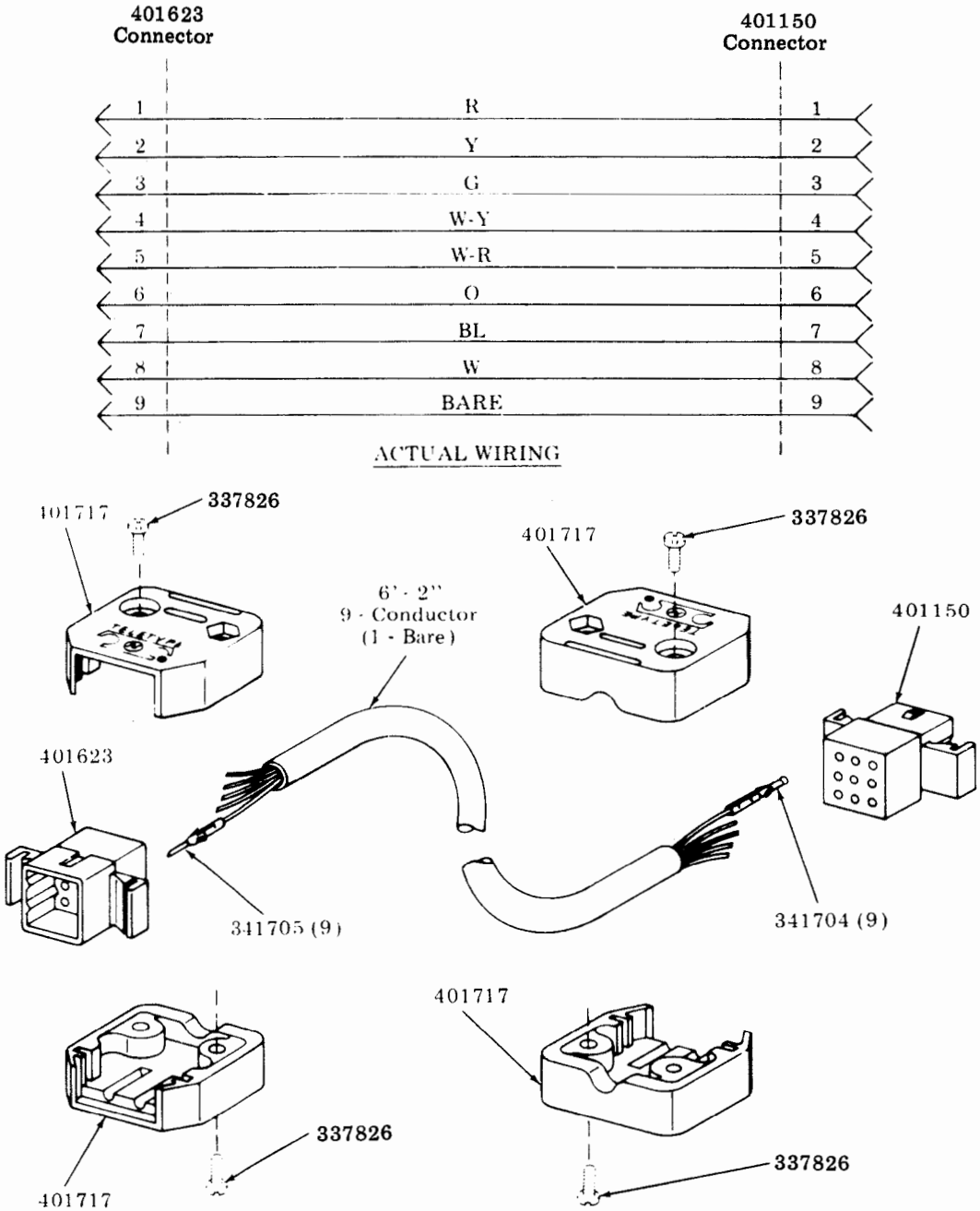

D. CABLE ASSEMBLIES (Cont)

8. 403404 ANSWER-BACK CABLE ASSEMBLY

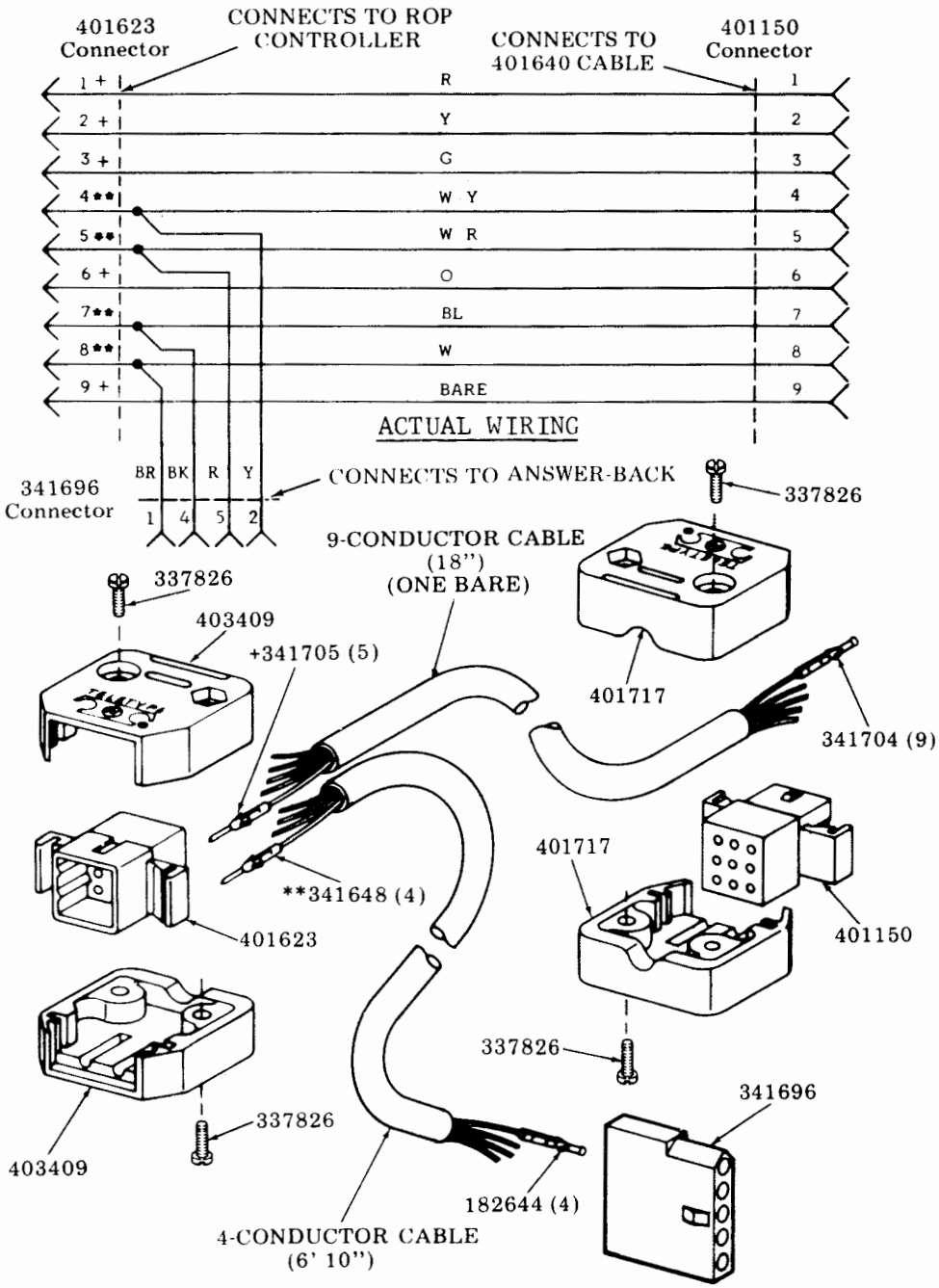

NOTE 1: Answer-back unit is optional; it is not present on all station arrangements.

NOTE 2: If answer-back is required for a KD or KDP, then pin 5 must be present on JC2 (opcon) connector at rear of controller.

9. 402178* CABLE ASSEMBLY -- 40/2 APPLICATION

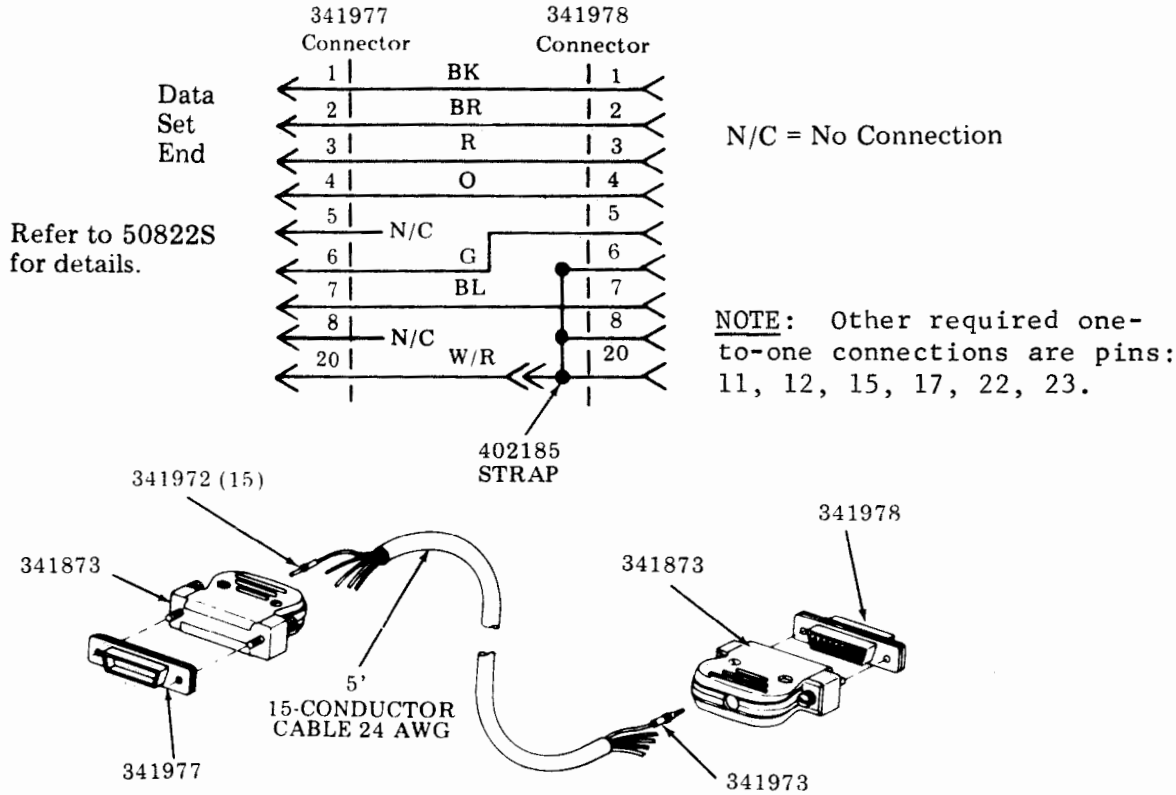

*Bell System 113A Data Set requires 402178 Cable -- 40/2 Application.

10. 403399** ATTENDANT SELECTABLE FEATURE -- 40/2 APPLICATION

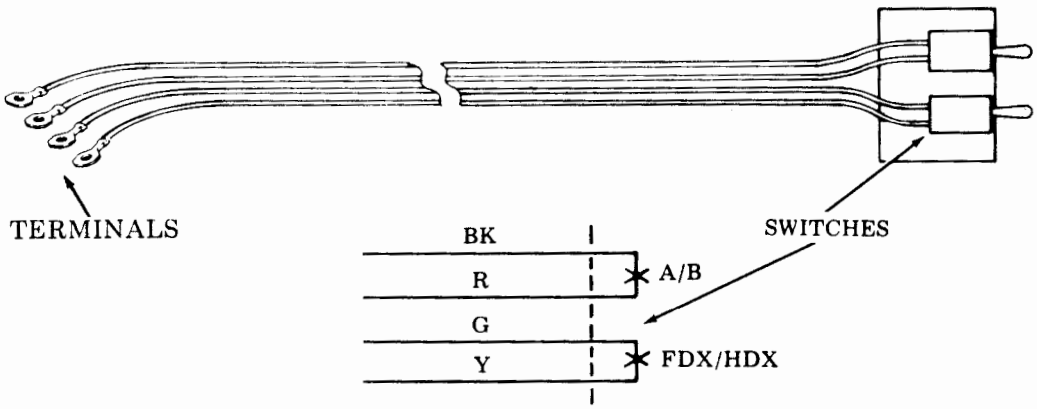

**403399 switches mount to pedestal door, see Page .
Terminals mount to 410680, see Page .

D. CABLE ASSEMBLIES (Cont)

11. 403378 CABLE ASSEMBLY -- 40/2 APPLICATION (See Notes.)

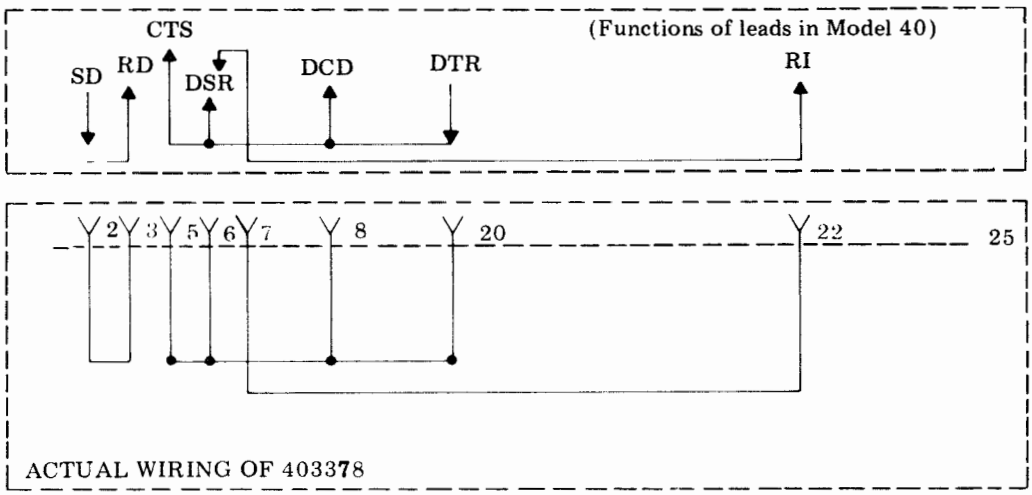

NOTE 1: If loop current (L.C.) interface data set is to be part of station, but EIA interface data set is not part of station, 403378 must be installed in "DATA SET" connector on rear of KD controller. If L.C. interface data set is to be part of station as well as EIA interface data set, then 403378 is not used.

NOTE 2: If station is KD with L.C. interface data set customer must provide cable to connect to "PRINTER" connector JC4 on rear of KD controller. The figure titled "LOOP CURRENT APPLICATIONS WITHOUT DATA SET" shows the required pins for a connector to connect to "JC4".

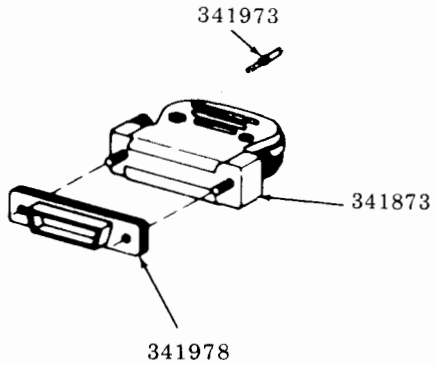

12. 402180 MODIFICATION KIT -- 40/2 APPLICATION

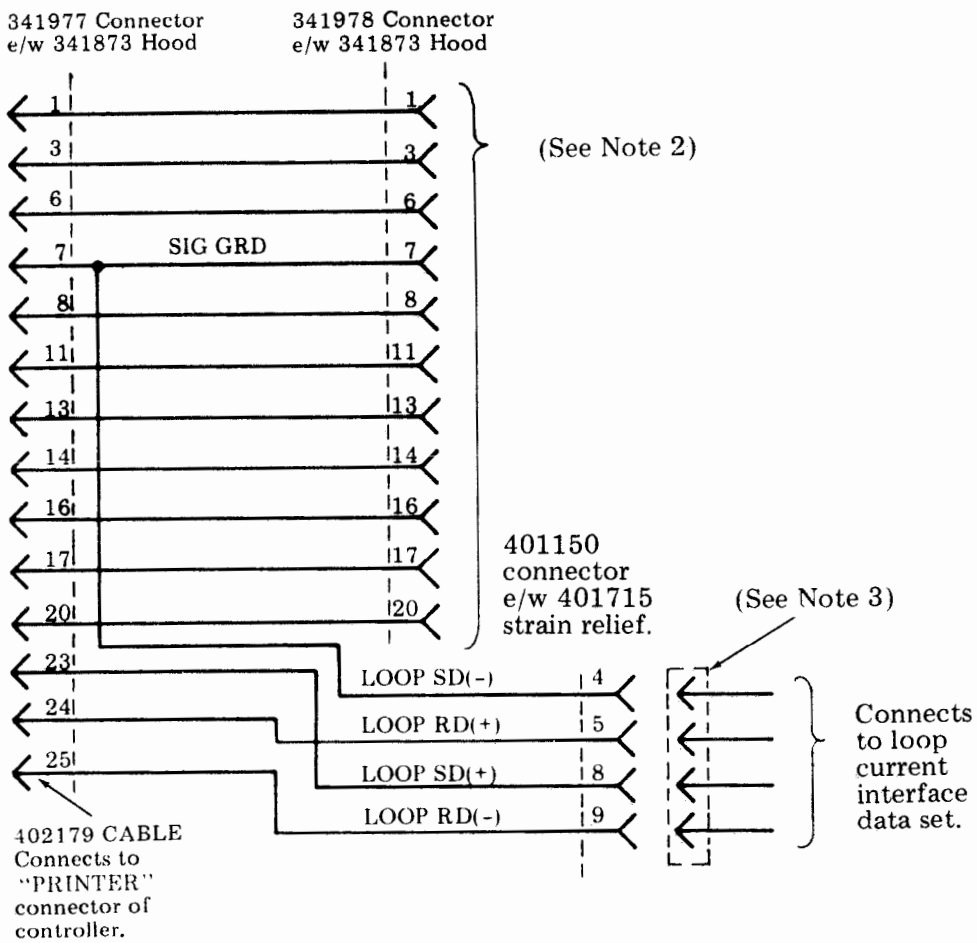

NOTE 1: If station is KDP with loop current interface data set, the 402179 cable (part of 402180) and the loose parts provided with 402180 may be used to interface the controller, data set, and printer as shown in the above figure. Note 1 of Page 5-28 applies.

NOTE 2: 402179 cable connects to 341895 cable which is part of KDP.

NOTE 3: 402180 consists of 402179 cable and loose parts to make up mating connector (wiring not provided).

D. CABLE ASSEMBLIES (Cont)

13. LOOP CURRENT APPLICATIONS WITHOUT DATA SET -- 40/2 APPLICATION

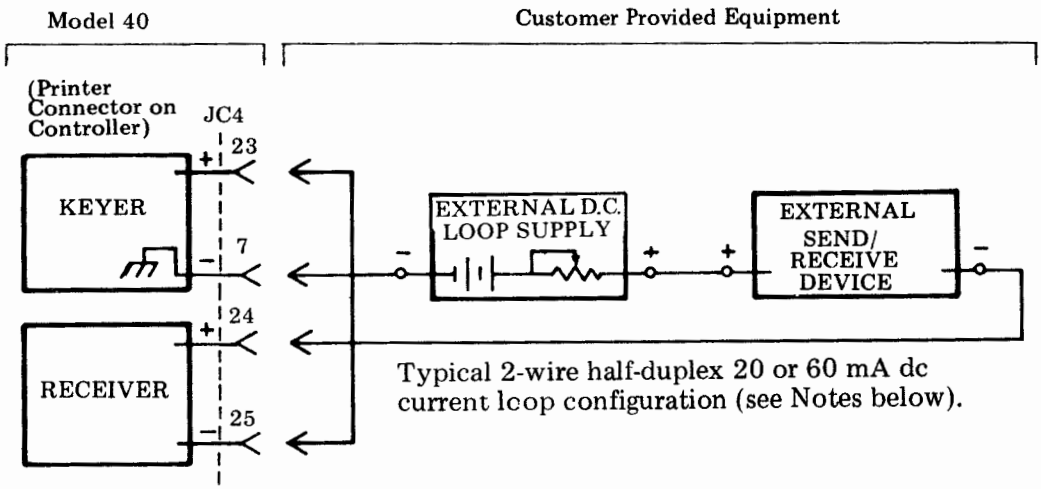

Typical 2-wire half-duplex 20 or 60 mA dc current loop configuration (see Notes below).

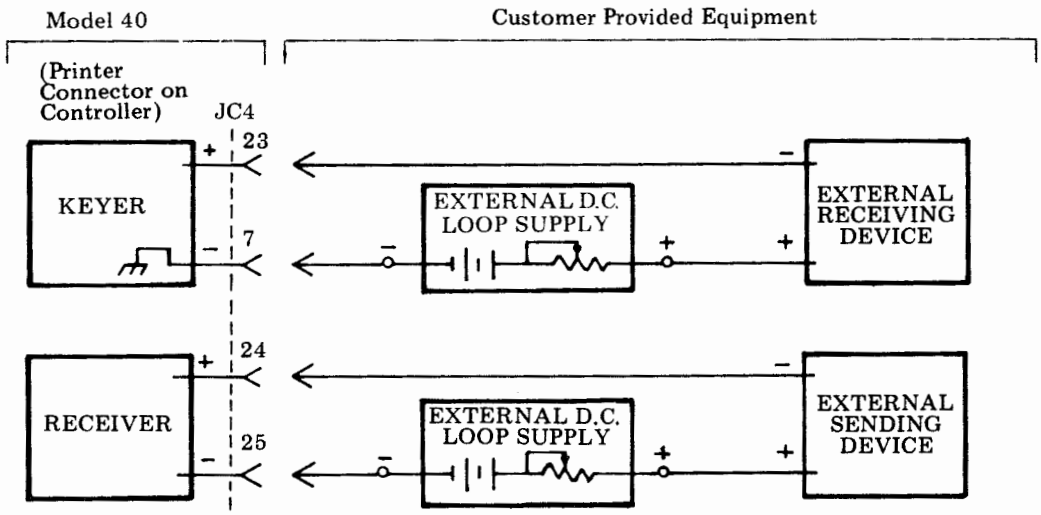

Typical 4-wire full duplex 20 or 60 mA dc current loop configuration

NOTE 1: Arrangements shown above assume that loop supply and external equipment are not referenced to earth ground.

NOTE 2: If loop current interface Model 40 is to be used and EIA interface data set is not also to be used, then 403378 must be installed in "DATA SET" connectors on controller.

PART 6 — ADJUSTMENTS

INDEX PAGE

A. MONITOR UNIT
1. ELECTRICAL ADJUSTMENTS 3
2. MASTER BRIGHTNESS 4
3. FOCUS 5
4. VERTICAL SIZE 5
5. VERTICAL LINEARITY 6
6. HORIZONTAL SIZE 6
7. HORIZONTAL LINEARITY 7
8. YOKE ORIENTATION 7
9. DISPLAY CENTERING 8
10. MECHANICAL ADJUSTMENTS 8

B. VENTILATION ASSEMBLY WITH BELTS (ELECTRONICS PACKAGE)
1. FAN ASSEMBLY 9
2. MOTOR PINION 9
3. FAN BELTS 10
4. MOTOR BELT 10

C. POWER SUPPLY 11

D. PRINTERS
1. GENERAL INSTRUCTIONS 12
2. LEFT SIDE ASSEMBLIES 13
Clutch BIDREC Gap (Early Design Printers Only) (Friction Feed) . . . 15
Clutch Drive Belt Tension 19
Clutch Magnet and Latch Spring 15
Clutch Shoe Release Arm 16
Clutch Shoe Release Arm Spring 15
Clutch Stop Lever (Early and Late Design) 20
Feed Bar Drive Belt Tension 18
Form-Out Contact Lateral (Final) 26
Form-Out Contact Lateral (Preliminary) 26
Form-Out Contact to Belt Spacing (Final) (Tractor Feed Only) 23
Form-Out Contact to Belt Spacing (Preliminary)
(Tractor Feed Printer) 22
Form-Out Contact Gap (Preliminary) (Tractor Feed Printer) 21
Form-Out Gear Backlash (Tractor Feed Printer) 22
Form Selector Lever Guide 21
Impeller Shaft Drive Belt Tension 21
Line Feed Armature Gap 19
Line Feed Bail Spring (Early Design) 18
Line Feed Bail Spring (Late Design) 18
Line Feed Bar Eccentric (Early and Late Design) 17

PART 6 — ADJUSTMENTS

INDEX PAGE

3. RIGHT SIDE ASSEMBLIES 27
Flag Sensor (Final) -- Under Power 32
Flag Sensor (Preliminary) 32
Flag Sensor Gap (Preliminary) 30
Impeller Shaft Sensor (Final) -- Under Power 31
Impeller Shaft Sensor (Preliminary) 31
Impeller Shaft Sensor Gap 29
Impeller Shaft to Carrier Phasing (Final) -- Under Power 33
Impeller Shaft to Carrier Phasing (Preliminary) 33

4. FRONT, TOP AND BACK ASSEMBLIES 34
Backup Bar (Final) 38
Left Carrier Sprocket (80-Column Printer) 42
Left Carrier Sprocket (132-Column Printer) 42
Low Paper Switch (80-Column Friction Feed) -- Under Power 49
Paper-Out Switch (80-Column Friction Feed) -- Under Power 49
Paper-Out Switch (132-Column Printer) 50
Paper-Out Switch (80-Column Tractor Feed) 49
Paper Positioner Roller -- Under Power 47
Power Supply Voltage 52
Ribbon Feed Drive Belt Tension 36
Ribbon Guide (Final) 45
Ribbon Guide (Preliminary) 44
Ribbon Mechanism Drag (Early Design) 37
Ribbon Tracking 46
Right Carrier Sprocket (80-Column Printer) 43
Right Carrier Sprocket (132-Column Printer) 43
Tractor Lid (Tractor Feed Printer) 48
Tractor Phasing (Tractor Feed Only) 48
Type Carrier Pallet Alignment 51

E. OPERATOR CONSOLE 53

PART 6 — ADJUSTMENTS

Field adjustments of Model 40 Terminals may be required upon installation or on maintenance calls. This manual includes all adjustments related to the monitor and electronics package, and those adjustments of the printer that are considered to be field adjustments.

A. MONITOR UNIT

1. ELECTRICAL ADJUSTMENTS

The controls that affect the display on the monitor screen are shown. These controls are adjusted with the monitor in position and power applied, with the monitor housing removed and with the heat sink lowered (see PART 7 -- COMPONENT ACCESS, Monitor).

WARNING: OBSERVE ALL PRECAUTIONS TO AVOID ELECTRICAL SHOCK OR BREAKAGE OF THE CATHODE RAY TUBE. WEAR SAFETY GLASSES WHENEVER THE MONITOR HOUSING IS REMOVED.

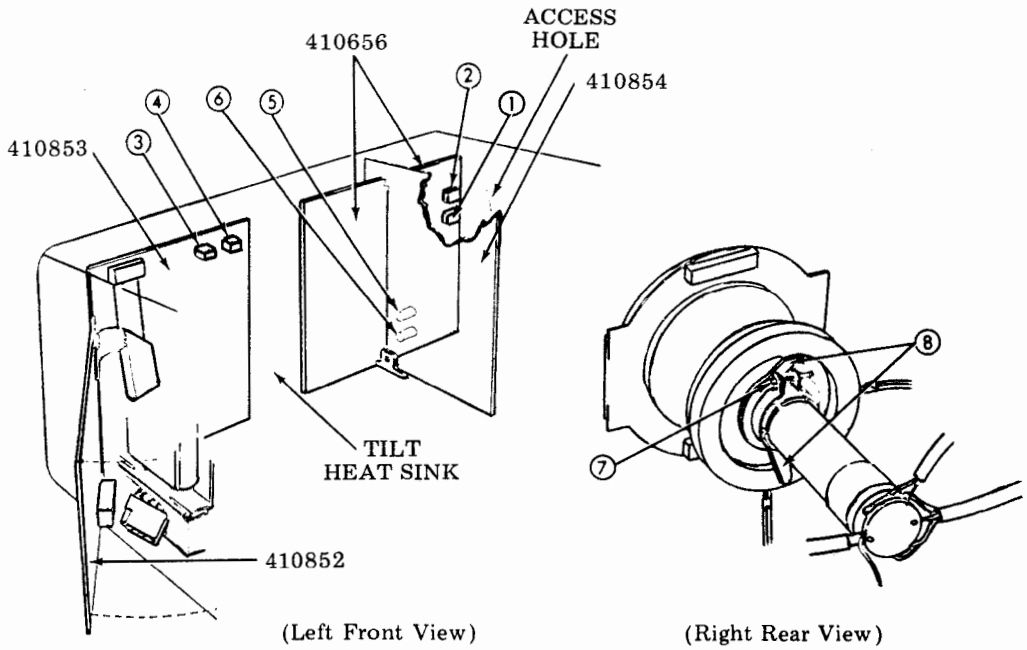

① Master Brightness
② Focus
③ Vertical Size
④ Vertical Linearity
⑤ Horizontal Size
⑥ Horizontal Linearity
⑦ Yoke Orientation
⑧ Display Centering

Monitor Unit

A. MONITOR UNIT (Cont)

1. ELECTRICAL ADJUSTMENTS (Cont)

Most of the electrical adjustments require a test pattern on the display tube face consisting of the character "E" (or equivalent) in all positions around the perimeter of the display.

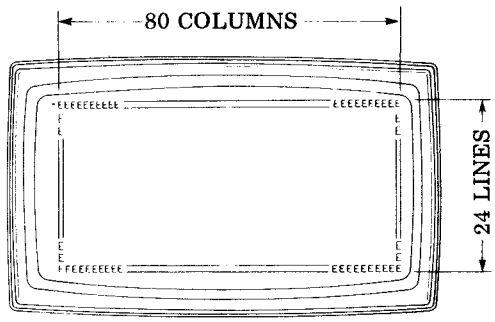

Display Test Pattern

2. MASTER BRIGHTNESS

Requirement: After a 3 minute warm-up the raster (lighted rectangular background) shall be clearly visible (but not bright) with operator brightness control turned full counterclockwise to maximum intensity.

To Adjust: Rotate operator brightness control full counterclockwise for maximum intensity. Rotate master brightness potentiometer clockwise for darker; counterclockwise for brighter. Adjust potentiometer for clearly visible raster.

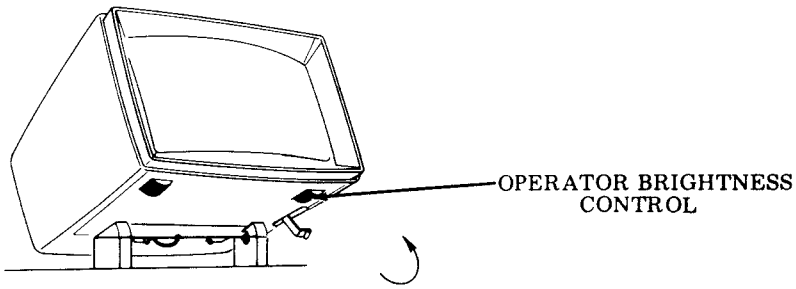

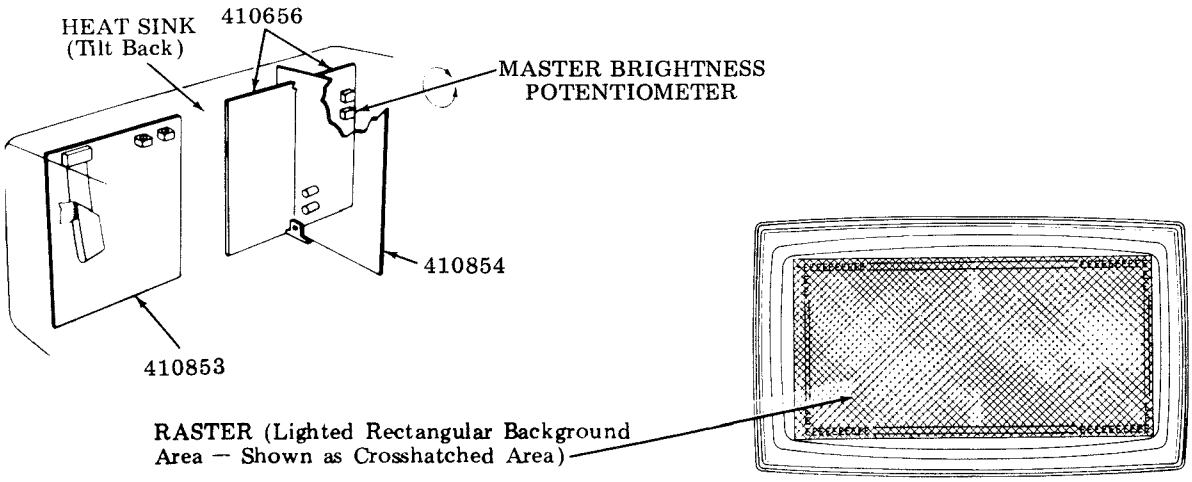

3. FOCUS

Requirement: The display characters shall be well defined.

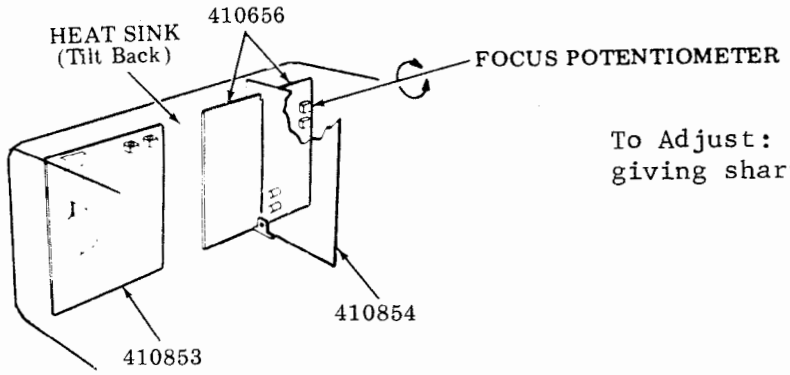

To Adjust: Rotate to position giving sharpest display characters.

4. VERTICAL SIZE

Requirement: After a 3 minute warm-up the height of the 24 lines shall be 5-1/4 inches ±1/8 inch.

To Adjust: Rotate clockwise to decrease; counterclockwise to increase.

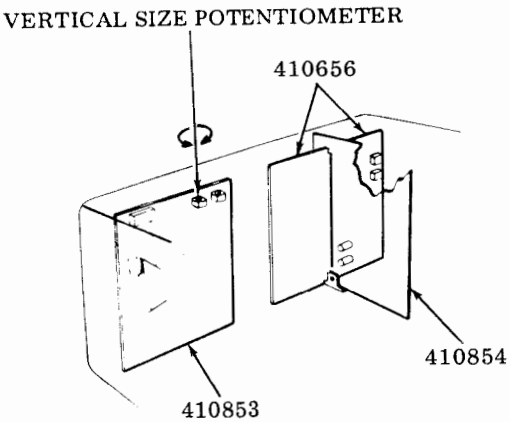

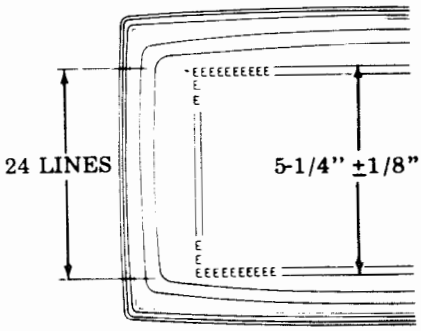

A. MONITOR UNIT (Cont)

5. VERTICAL LINEARITY

Requirement: Character height shall be uniform throughout the display.

To Adjust: Rotate clockwise to decrease top row; counterclockwise to decrease bottom.

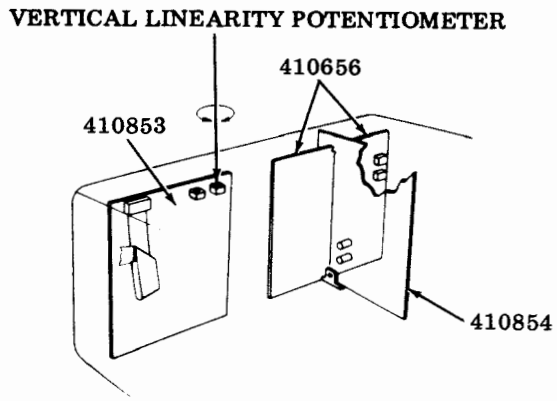

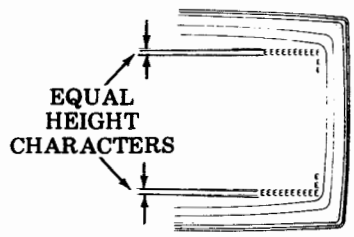

6. HORIZONTAL SIZE

Requirement: After a 3 minute warm-up the width of 80 characters shall be 11-1/4 inches ±1/4 inch.

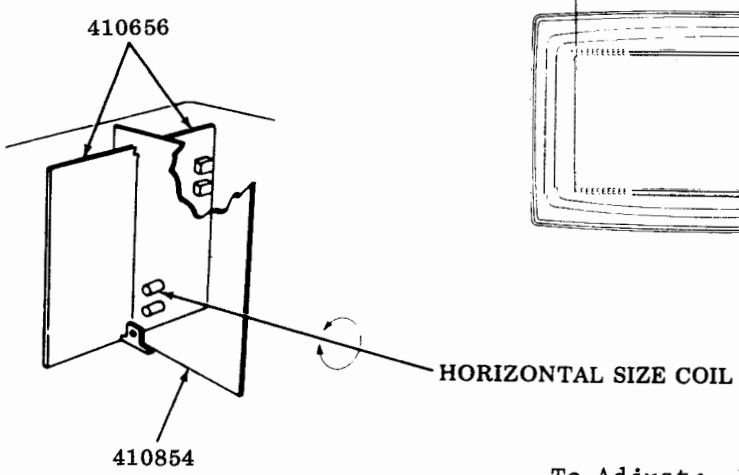

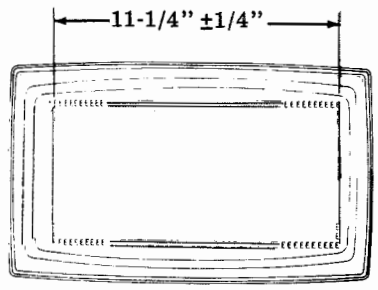

To Adjust: Rotate clockwise to decrease width; counterclockwise to increase width.

7. HORIZONTAL LINEARITY

Requirement: Character width shall be uniform throughout the display as gauged by eye.

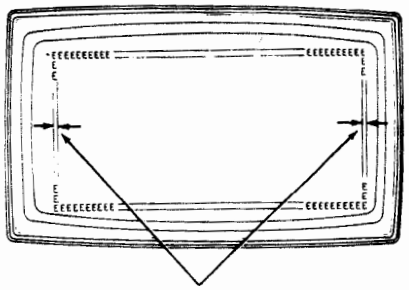

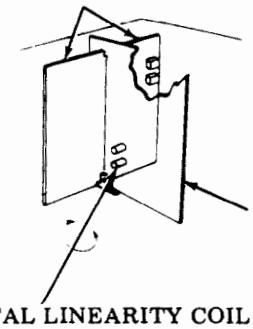

To Adjust: Rotate horizontal linearity coil for uniform width characters. Check and refine (if necessary) HORIZONTAL SIZE adjustment.

8. YOKE ORIENTATION

Requirement: The rectangular display area shall be aligned (rotationally) to the cathode ray tube face.

CAUTION: HIGH VOLTAGES ARE PRESENT AT THE YOKE. HANDLE ONLY BY THE YOKE LINER. THE NECK OF THE CRT IS FRAGILE. BE CAREFUL NOT TO STRIKE THE GLASS WITH SCREWDRIVERS, ETC. DO NOT OVERTIGHTEN THE YOKE CLAMP SCREW.

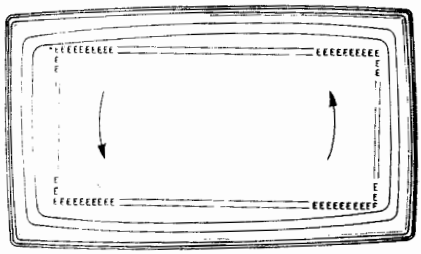

Rotate yoke to align display.

To Adjust: Loosen yoke clamp screw. Rotate yoke to align display with CRT face. Do not overtighten yoke clamp screw.

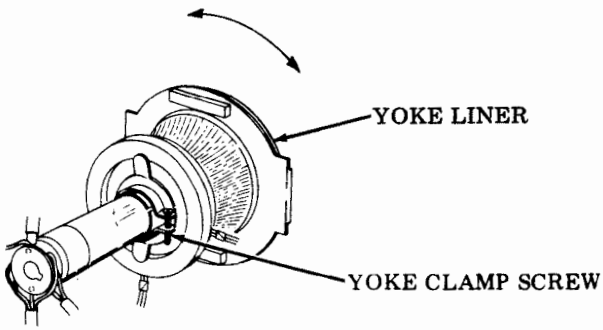

A. MONITOR UNIT (Cont)

9. DISPLAY CENTERING

Requirement: The display (80 characters by 24 lines) shall be centered on the CRT face as gauged by eye.

To Adjust: Rotate two centering rings by tabs.

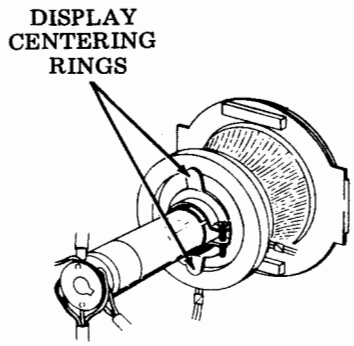

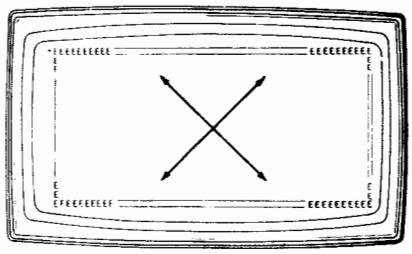

Display movement as centering rings are rotated.

10. MECHANICAL ADJUSTMENTS

Tube Tilt Mechanism (Early Design)

(Late Design requires no adjustment.)

Requirement: Backlash shall be minimum between the tube tilt gear and rack without binding throughout tilt range.

To Adjust:

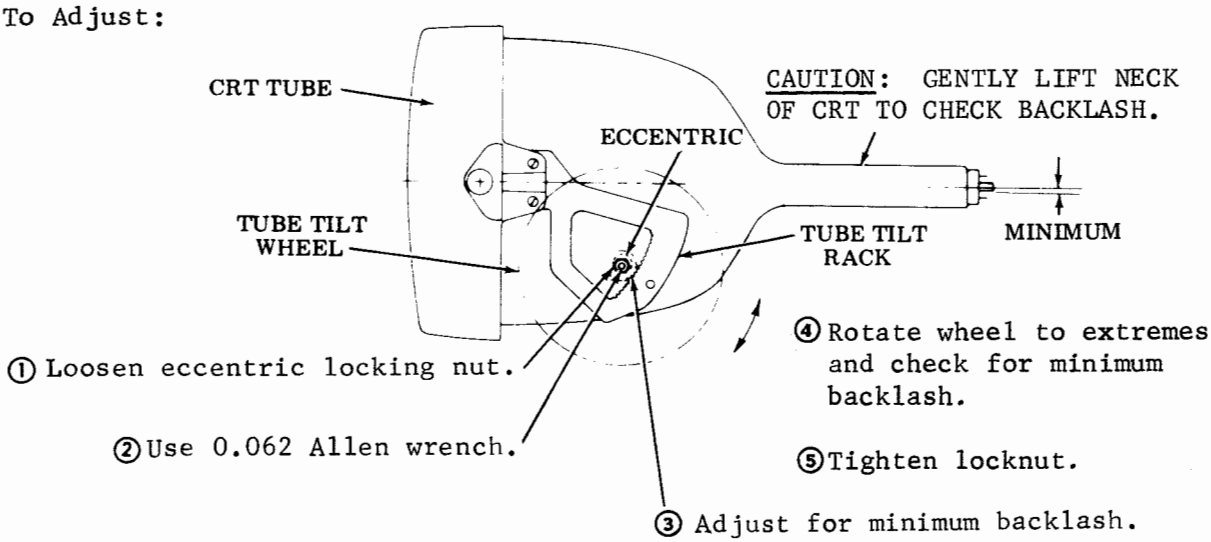

B. VENTILATION ASSEMBLY WITH BELTS (ELECTRONICS PACKAGE)

The following adjustments are related to the Early Design 401040 ventilation assembly on the rear of the electronics package. These adjustments are made with the power off, and with the electronics package removed from the cabinet. See Part 7 -- COMPONENT ACCESS for disassembly instructions. (Beltless fans require no adjustment.)

1. FAN ASSEMBLY

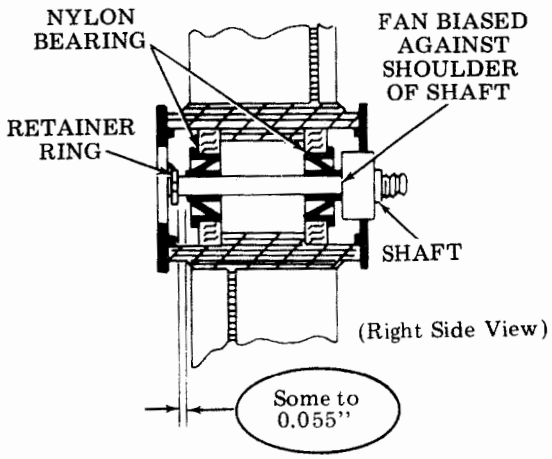

Requirement: With each fan biased against shoulder of shaft (forward), clearance between retainer ring and nylon bearing should be
Min some --- Max 0.055 inch.

To Adjust: Remove plastic cap from hub of fan. Position retainer ring to meet requirement (use 160396 retainer ring pliers, if available). Replace plastic hub cap.

2. MOTOR PINION

NOTE: Make sure motor mounting screws are tight before making this adjustment.

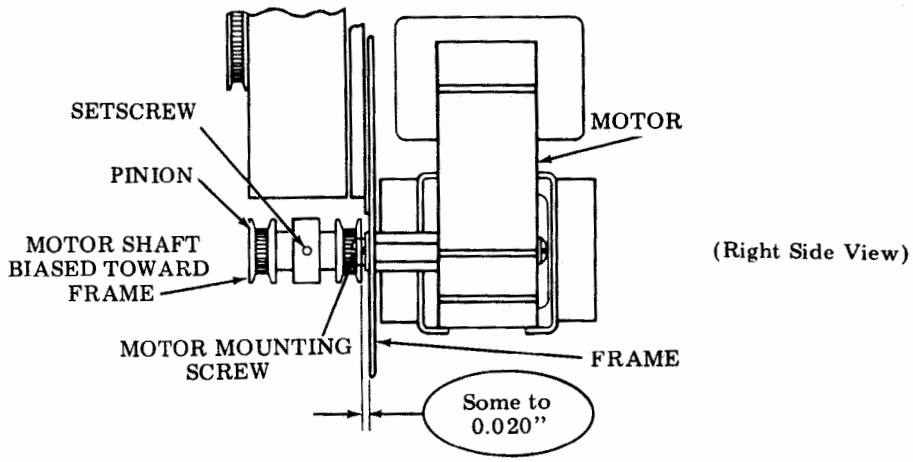

Requirement: With pinion end of motor shaft biased toward frame, clearance between pinion flange and frame should be
Min some --- Max 0.020 inch.

To Adjust: Loosen setscrew and position pinion to meet requirement. Tighten setscrew. Check for binds between pinion flange and frame.

B. VENTILATION ASSEMBLY WITH BELTS (ELECTRONIC PACKAGE) (Cont)

3. FAN BELTS

Requirement: Distance from outside to outside of each belt should be
Min 21/32 inch --- Max 23/32 inch
with 1 ounce force applied to center of belt. Adjust fans ①, ②, and ③ in that order.

To Adjust: Loosen fan motor mounting nuts and adjust to give required distances.

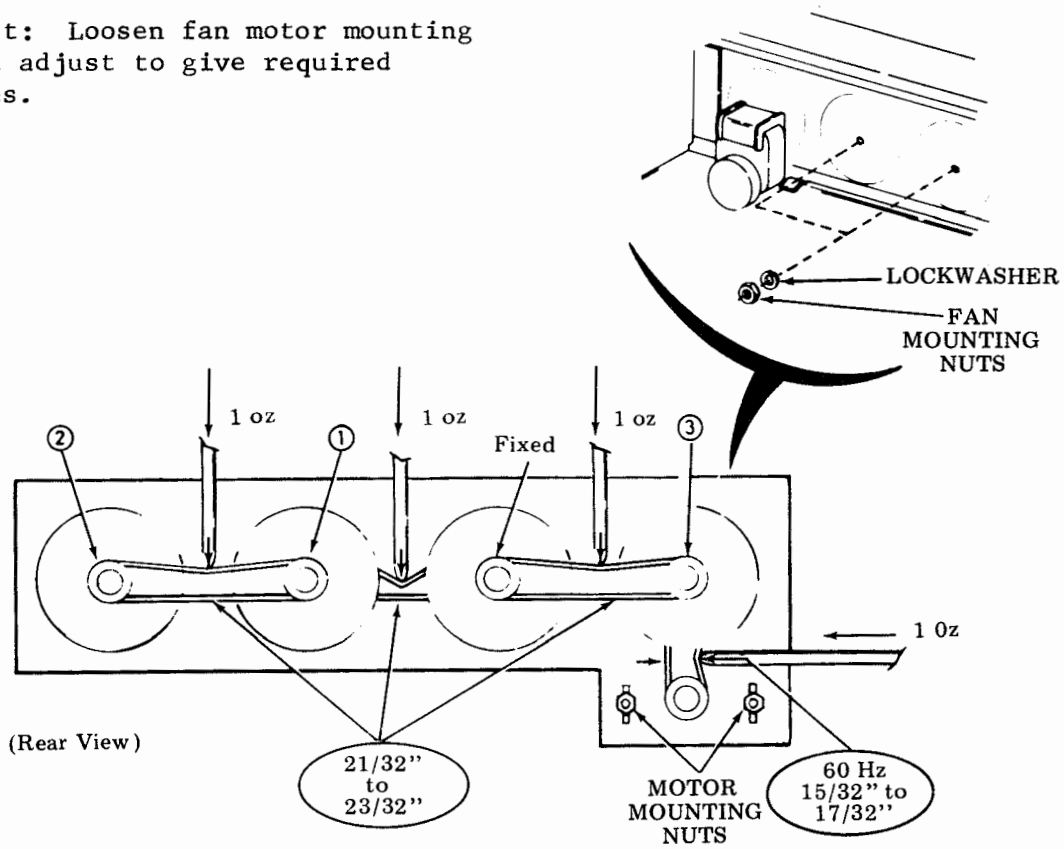

4. MOTOR BELT

Requirement: Distance from outside to outside of belt should be
Min 15/32 inch --- Max 17/32 inch (60 Hz applications)
with 1 ounce force applied to center of belt.

C. POWER SUPPLY

The regulated +5.0 volt output of the power supply is adjusted by means of a potentiometer on the 410600 card (in power supply). This adjustment is factory made, and should be readjusted only if indicated by the troubleshooting instructions in this manual. The power supply must be disassembled as follows.

a. With power off, remove power supply from electronics package; remove cover, and separate 410600 card from power supply frame. (See PART 7 -- COMPONENT ACCESS, Power Supply.)

b. Place power supply frame and circuit card next to electronics package and connect ground straps from rear mounting screw hole of 410600 card to power supply frame and from power supply frame to frame of electronics package, as shown below.

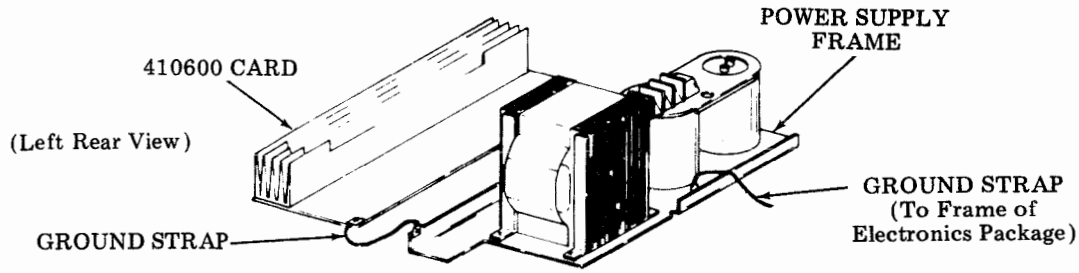

c. Connect ac connector and ribbon cable(s) to power supply.

CAUTION: MAKE SURE CABLE LEADS CONNECT TO PROPER TERMINALS OF POWER SUPPLY. WITH POWER SUPPLY POSITIONED AS ABOVE, THIS REQUIRES RIBBON CABLE BE TWISTED 180 DEGREES BETWEEN ELECTRONICS PACKAGE AND TERMINAL STRIP. BE ESPECIALLY CAREFUL IN TWISTING CABLE OF ROP. MAKE SURE CIRCUIT CARD LANDS DO NOT SHORT AGAINST ANYTHING.

d. With ac power on, connect voltmeter with 1 percent of full scale accuracy between +5 and GRD terminals of power supply. Adjust potentiometer R45 on 410600 card for reading of +5.0 V dc ±0.10 V dc.

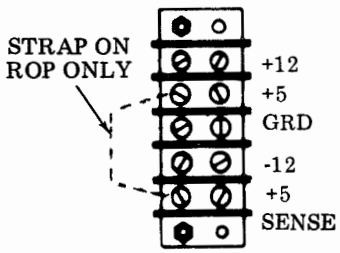

Terminal Strip

CAUTION: EXERCISE CARE IN MAKING THE ADJUSTMENT, IF METAL SHAFT SCREWDRIVER IS USED, TO AVOID SHORTING COMPONENT LEADS.

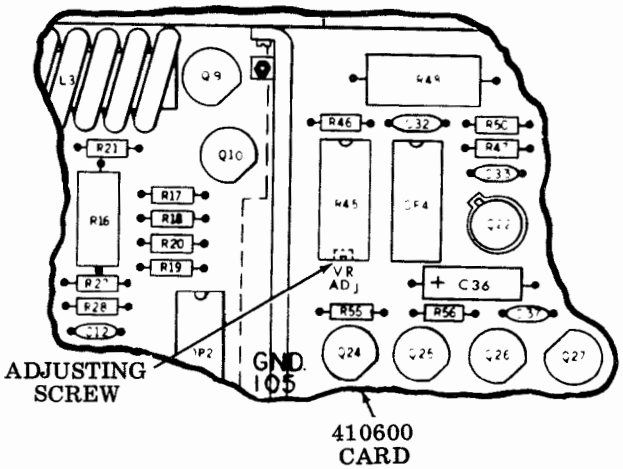

D. PRINTERS

1. GENERAL INSTRUCTIONS

Adjustments in this section are those which can be performed readily at the operating site. Adjustments that require major disassembly of the printer (more appropriately performed at a Repair Center) are not covered in this manual.

Adjustments are grouped according to the location of the mechanism (front, left side, or right side), and in the sequence recommended for a comprehensive "in-the-field" adjustment.

Adjustments are provided for friction feed and tractor feed, both 80- and 132-column. Adjustments that apply to only one type of printer are so indicated. All other adjustments apply to both friction feed and tractor feed units.

Identification drawings and tables are included to locate the various mechanisms and list the adjustments related to these mechanisms. (Some parts are noted for identification purpose only, and have no adjustments.)

The instruction "friction tight" means to tighten to the point where friction keeps the parts from moving, but they are still loose enough to move for adjustment purposes.

Spring or belt tensions are checked with a spring scale held at the angle shown in the adjustment illustration. Springs that do not meet requirements, and for which no adjustment procedure is given, should be replaced.

After adjustment is complete, tighten any screws or nuts loosened to make the adjustment.

WARNING: WITH COVER INTERLOCK SWITCH IN MAINTENANCE POSITION OR BYPASSED BY A JUMPER, AS REQUIRED FOR RUNNING ADJUSTMENTS, PRINTER MOTOR MAY START ACCIDENTALLY. WHENEVER PERFORMING ANY NONRUNNING ADJUSTMENTS, BE SURE AC POWER IS REMOVED (TURN OFF PRIMARY AC POWER SWITCH OR UNPLUG POWER CORD FROM AC OUTLET).

2. LEFT SIDE ASSEMBLIES

Identification -- Friction Feed Printer

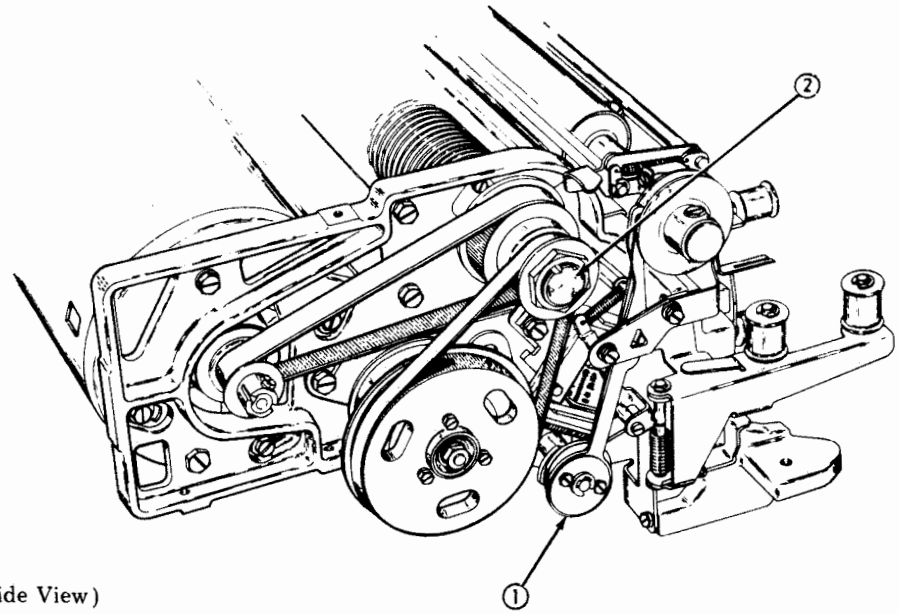

(Left Side View)

ASSEMBLY	ADJUSTMENTS
① Line Feed Assembly	Clutch BIDREC Gap Clutch Shoe Release Arm Spring Clutch Shoe Release Arm Line Feed Armature Gap Clutch Stop Lever Clutch Magnet and Latch Spring Line Feed Bar Eccentric and Feed Bar Drive Belt Tension Line Feed Bail Spring (Late Design) Line Feed Bail Spring (Early Design) Clutch Drive Belt Tension
② Impeller Shaft	Impeller Shaft Drive Belt Tension

D. PRINTERS (Cont)

2. LEFT SIDE ASSEMBLIES (Cont)

Identification -- Tractor Feed Printer

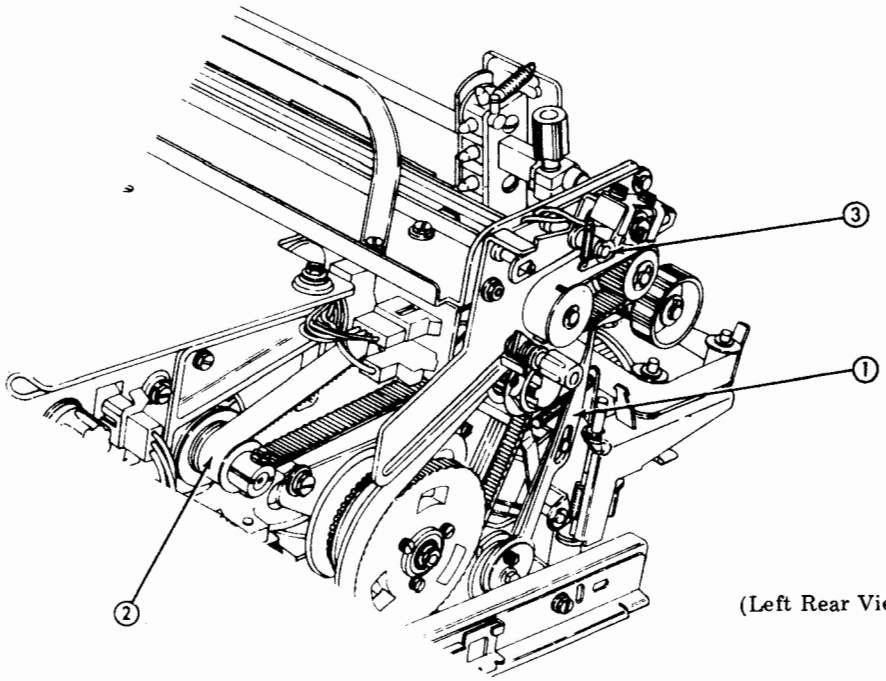

(Left Rear View)

ASSEMBLY	ADJUSTMENTS
① Line Feed Assembly	Clutch BIDREC Gap Clutch Shoe Release Arm Spring Clutch Shoe Release Arm Line Feed Armature Gap Clutch Stop Lever Clutch Magnet and Latch Spring Line Feed Bar Eccentric (Early and Late Design) Feed Bar Drive Belt Tension Line Feed Bail Spring (Late Design) Line Feed Bail Spring (Early Design) Clutch Drive Belt Tension
② Impeller Shaft	Impeller Shaft Drive Belt Tension
③ Form Out	Form-Out Contact Gap (Preliminary) Form Selector Lever Guide Form-Out Contact to Belt Spacing (Preliminary) Form-Out Gear Backlash Form-Out Contact and Belt Spacing (Final) Form-Out Contact Lateral (Preliminary) Form-Out Contact Lateral (Final)

CLUTCH BIDREC GAP (Early Design Printers Only) (Friction Feed)

- Clutch engage.

Requirement: Gap between clutch adjusting disc post and shoe release lever 0.002 inch to 0.018 inch for machines operated under 100 hours.

0.002 inch to 0.025 inch for machines operated over 100 hours.

To Adjust: If requirement cannot be met, replace clutch shoes and/or clutch drums.

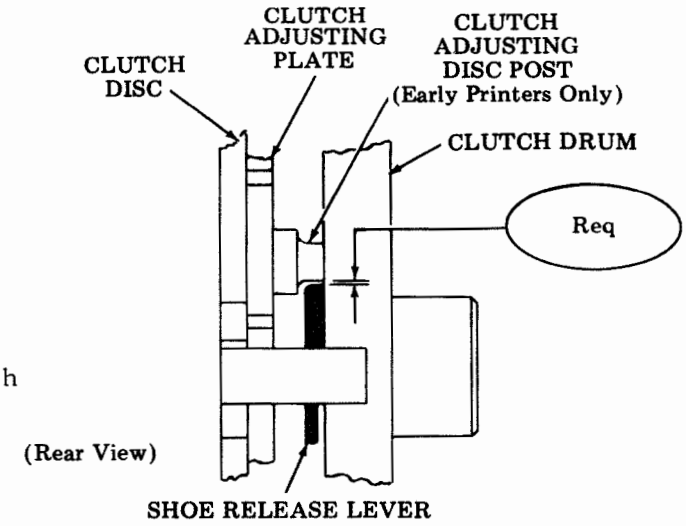

CLUTCH MAGNET AND LATCH SPRING

Requirement: The clutch disc should be in the center of latch spring, and shoe release arm should be central to the end of the stop lever as gauged by eye.

To Adjust: Remove line feed magnet assembly. Loosen mounting screws friction tight. Position stop lever and latch spring. Tighten mounting screws.

NOTE: Perform Clutch Stop Lever adjustment after reassembling line feed magnet assembly.

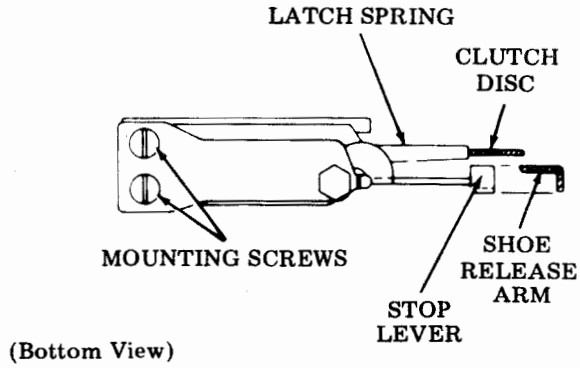

CLUTCH SHOE RELEASE ARM SPRING

- Engage clutch.
- Hold clutch disc.
- Pull with scale on shoe release arm tangent to the clutch.

Requirement: 16 oz to 22 oz to move the shoe release arm into contact with the stop lug.

To Adjust: Remove clutch assembly and replace 150241 spring.

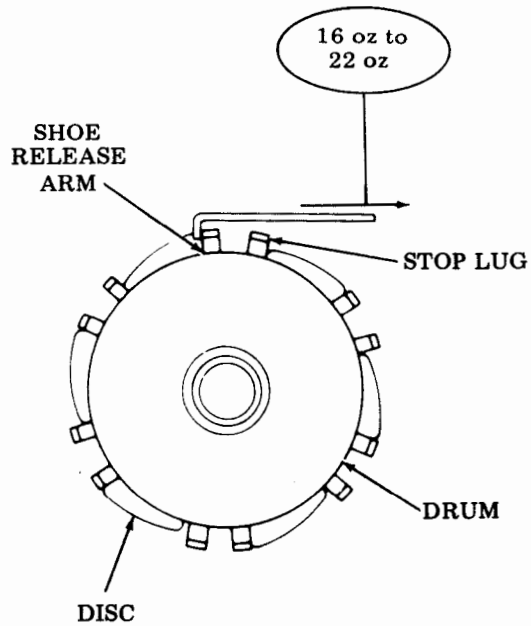

D. PRINTERS (Cont)

2. LEFT SIDE ASSEMBLIES (Cont)

CLUTCH SHOE RELEASE ARM

Requirement: There shall be 0.065 to 0.095 inch gap between the shoe release arm and the stop lug while the clutch is engaged.

To Measure: Momentarily disengage the clutch by pulling against the shoe release arm. After re-engaging the clutch momentarily apply 16 oz of tension on the shoe release arm in a direction to give a maximum gap. Rotate the clutch disc in a direction to close the gap with sufficient force to overcome the disc spring tension until the clutch disc is at rest against its positive stop. While holding the clutch disc against its stop, measure the gap between the shoe release arm and the stop lug of the clutch disc.

To Adjust: Loosen the two plate clamp screws friction tight. Rotate the clutch disc until the requirement is met. Tighten the clamp plate screws.

NOTE: This adjustment is to be made before the clutch assembly is assembled to the line feed mechanism mounting plate and before the plastic output pulley is installed.

To Check the Requirement When the Clutch Assembly is Installed in a Unit: Hold the clutch drum pulley to prevent it from moving. Trip the clutch magnet. While holding the clutch drum pulley from rotating momentarily apply 16 oz to the shoe release arm in a direction to give a maximum gap. Rotate the clutch drum pulley in a direction to close the gap with sufficient force to take up all the play. While holding the clutch drum pulley in this position measure the gap.

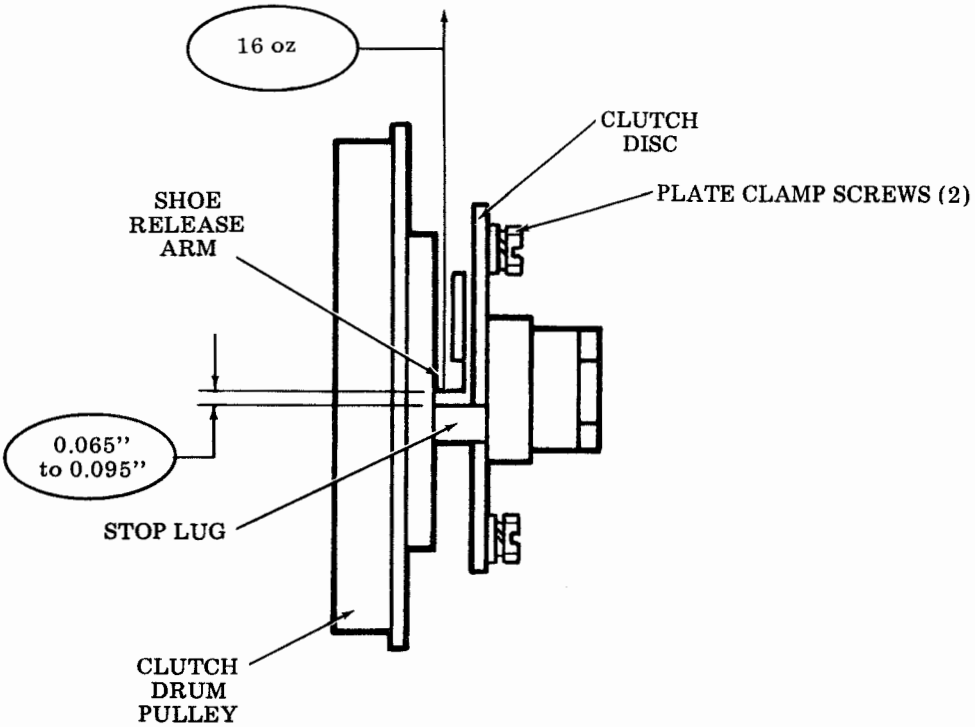

LINE FEED BAR ECCENTRIC (EARLY AND LATE DESIGN)

(Late Design)

Requirement: Feed bars should be parallel to each other as gauged by eye.

To Check: Disengage line feed clutch (latched). Position line feed bars against feed roller drive gear (friction feed) or tractor drive gear (tractor feed).

To Adjust: Remove feed bar drive belt from clutch sprocket. Rotate feed bar eccentric to meet requirement. Replace belt.

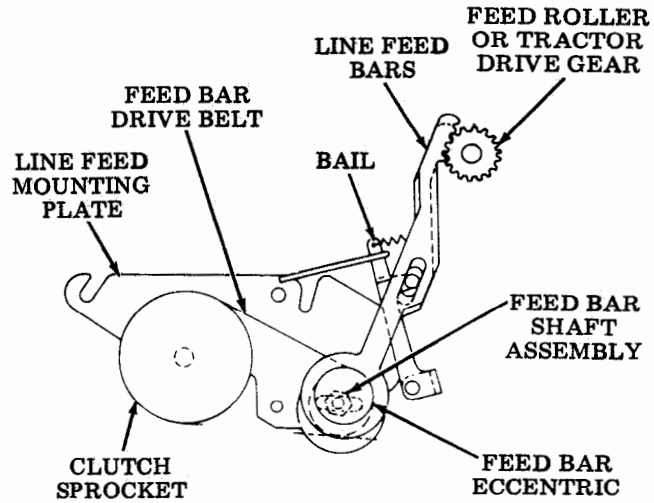

(Left Side View)

(Early Design)

Requirement: Feed bar eccentric adjusting screws should be positioned at right angles to line feed bar rear surface as gauged by eye.

To Check: Disengage line feed clutch (latched). Position line feed bars against feed roller drive gear (friction feed) or tractor drive gear (tractor feed).

To Adjust: Loosen feed bar eccentric adjusting screws. Rotate eccentrics to meet requirement. Tighten adjusting screws.

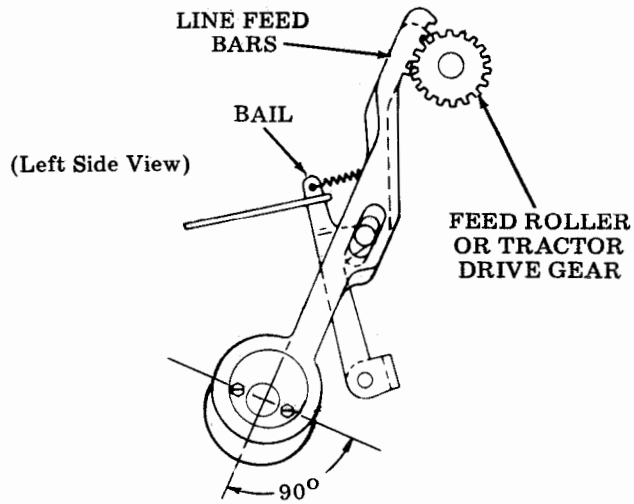

D. PRINTERS (Cont)

2. LEFT SIDE ASSEMBLIES (Cont)

FEED BAR DRIVE BELT TENSION

Requirement: With a force of 5 oz applied perpendicular to the drive belt approximately midway along its free length, the belt should deflect 1/16 inch to 1/8 inch from a line tangent to both pulleys.

To Adjust:

(Late Design) Loosen nut mounting feed bar shaft to the mounting plate. Move feed bar shaft to left or right to meet requirement. Tighten feed bar shaft nut.

(Early Design): Remove circuit card. Loosen mounting nut (behind mounting plate). Position feed bar shaft assembly to meet requirement. Tighten mounting nut.

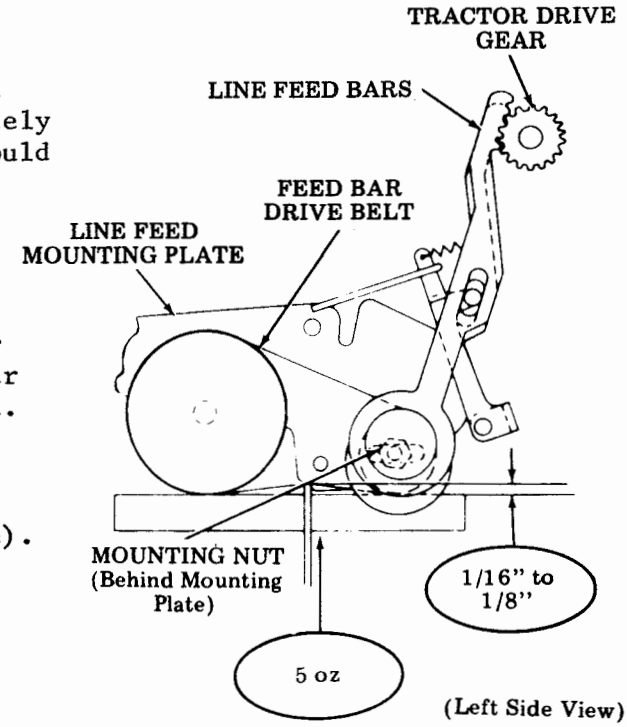

LINE FEED BAIL SPRING (LATE DESIGN)

Requirement: 32 oz to 44 oz to start line feed bail moving.

LINE FEED BAIL SPRING (EARLY DESIGN)

Requirement: 32 oz to 44 oz to start line feed bail moving.

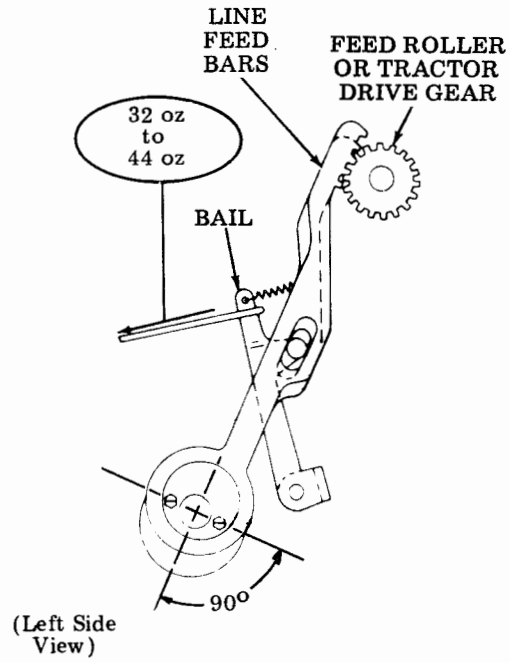

CLUTCH DRIVE BELT TENSION

Requirement: With a force of 5 oz applied perpendicular to the drive belt approximately midway along its free length, belt should deflect 1/32 inch to 5/32 inch from a line tangent to both pulleys.

To Adjust: Loosen three line feed assembly mounting screws to allow the assembly to move freely about its pivot. Pull against the line feed clutch sprocket with a force of 48 oz to 52 oz, in line with a line drawn through the centers of the line feed clutch sprocket and the impeller shaft sprocket. Tighten line feed assembly mounting screws with the tension applied.

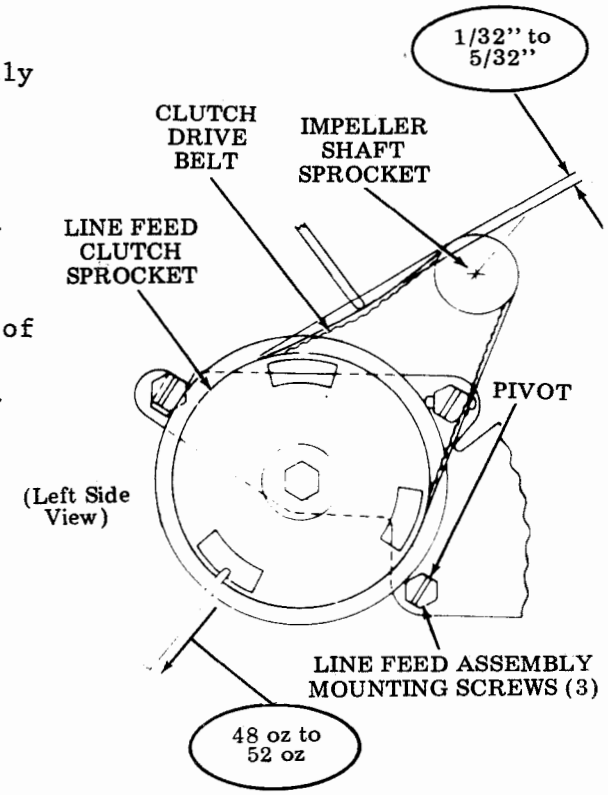

LINE FEED ARMATURE GAP

Requirement: A 0.025 inch gauge will enter the armature gap but will not pass beyond mid point of the pole face as gauged by eye.

To Adjust: With the locknut loosened, make the adjustment using the adjusting screw. Tighten locknut.

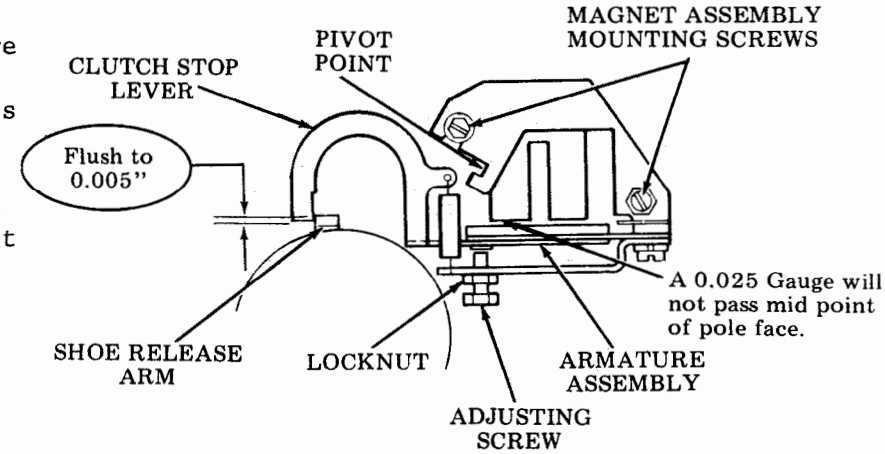

D. PRINTERS (Cont)

2. LEFT SIDE ASSEMBLIES (Cont)

CLUTCH STOP LEVER (EARLY AND LATE DESIGN)

Requirement: The top surface of the clutch stop lever should be flush to 0.005 inch overflush with the top surface of the shoe release arm.

(Early Design)

To Adjust: Loosen the magnet assembly post and mounting screw friction tight. Position the magnet assembly to meet the requirement using the pry points. Tighten the mounting screw and the mounting post.

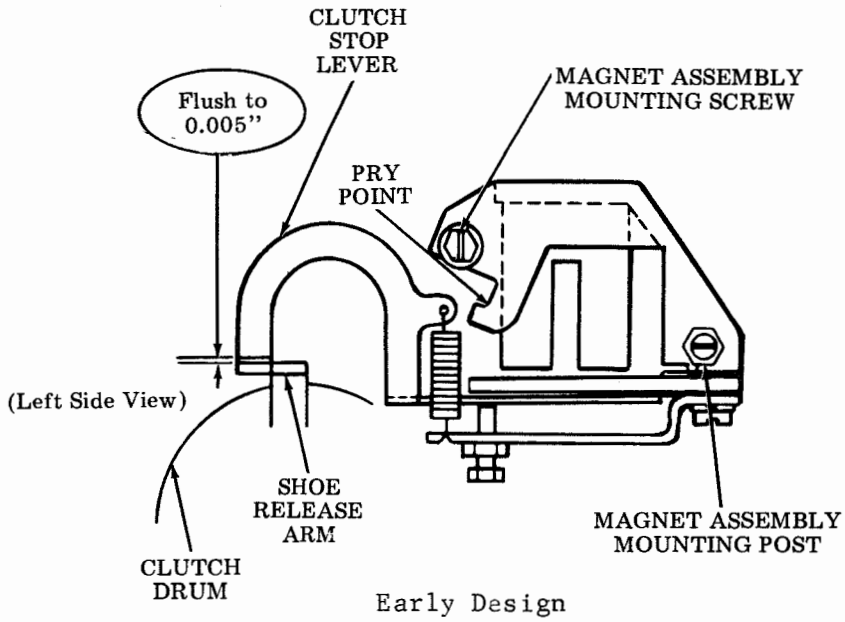

Early Design

(Late Design)

To Adjust: Loosen magnet assembly mounting nut and armature stop lever mounting screw and nut friction tight. Position armature stop lever so that the clutch stop lever meets the requirement. Tighten armature stop lever mounting screw securely.

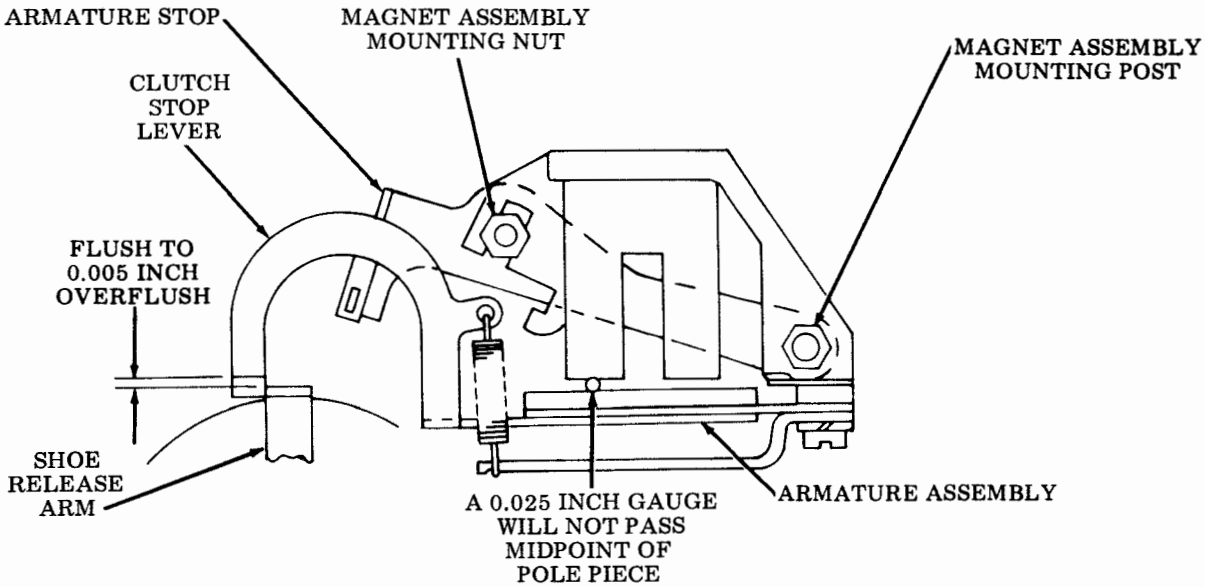

Late Design

IMPELLER SHAFT DRIVE BELT TENSION

Requirement: With a force of 5 oz applied perpendicular to the drive belt approximately midway along its free length, the belt should deflect 1/16 inch to 1/8 inch from a line tangent to both pulleys.

To Adjust: Loosen motor assembly mounting screws friction tight. Using one of the pry points, adjust to meet requirement. Tighten mounting screws.

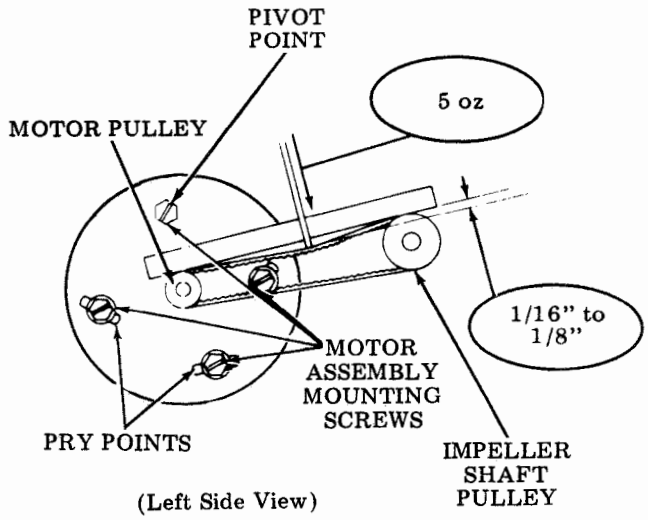

FORM-OUT CONTACT GAP (Preliminary)
(Tractor Feed Printer)

Requirement: With form-out contacts fully open, gap between contacts should be
Min 0.020 inch
Max 0.030 inch.

To Adjust: Form contact spring to meet requirement.

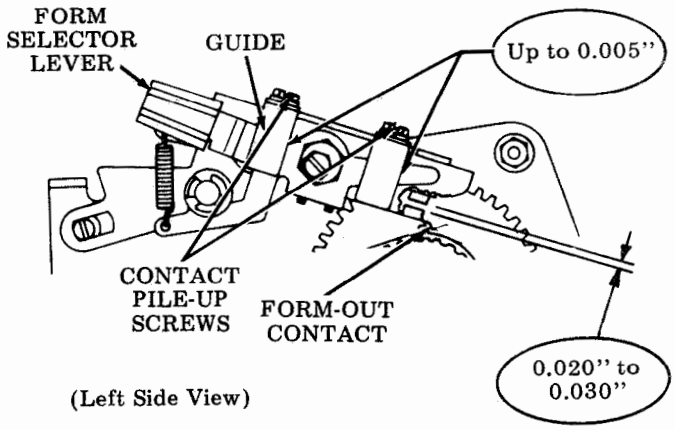

FORM SELECTOR LEVER GUIDE
(Tractor Feed Printer)

Requirement: There shall be up to 0.005 inch clearance between the guide and the form selector lever. The selector lever must operate freely.

To Check: Form selector biased toward contact housing and selector lever operated through its entire range of motion.

To Adjust: Loosen the guide mounting screw friction tight and position the guide to meet the requirement. Tighten the mounting screws.

NOTE: This contact is manufactured within the requirement and will remain so unless one or both contact springs have been deformed. If adjustment is required, adjust the spring which shows sign of such deformation.

D. PRINTERS (Cont)

2. LEFT SIDE ASSEMBLIES (Cont)

FORM-OUT CONTACT TO BELT SPACING (PRELIMINARY) (TRACTOR FEED PRINTER)

Requirement (A): The high side of the eccentric bushing shall be positioned approximately 90° to the form-out contact arm as shown.

Requirement (B): With the form selector lever seated in the no. 4 position detent groove, the form-out contact shall be just touching the form-out belt.

To Adjust (A): Loosen eccentric bushing clamp screw and position eccentric to meet Requirement (A).

To Adjust (B): Loosen eccentric post clamp nut friction tight and position eccentric post to meet Requirement (B).

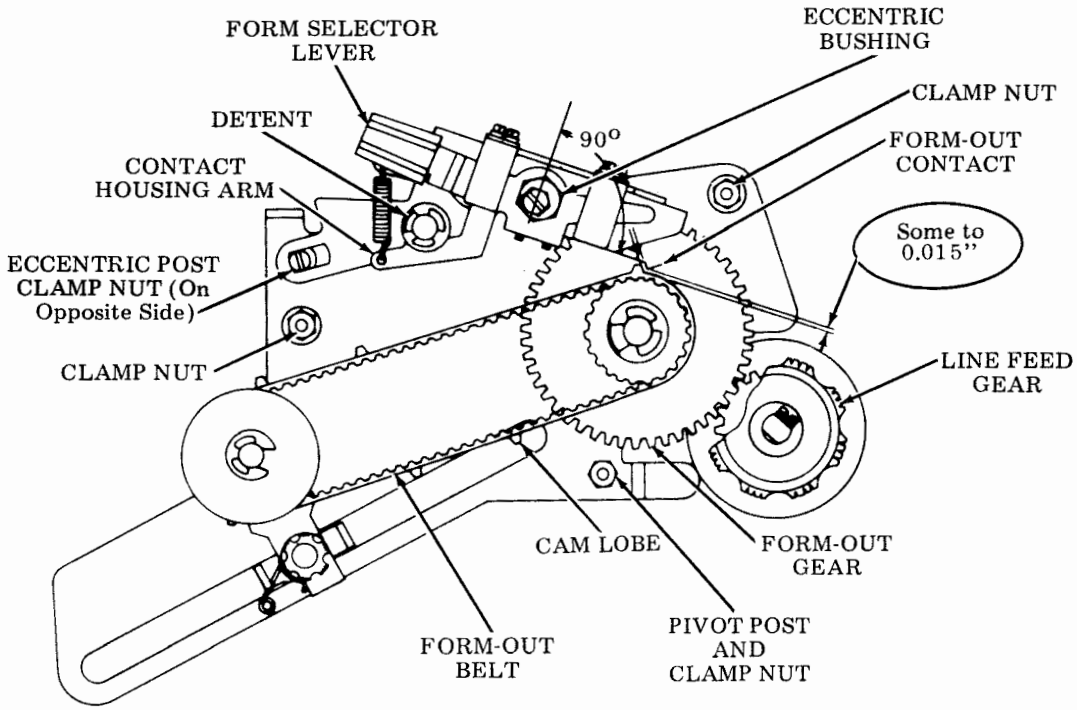

(Left Side View)

FORM-OUT GEAR BACKLASH (TRACTOR FEED PRINTER)

Requirement: While holding form-out gear stationary, turn manual paper advance knob. There should be a barely perceptible amount of backlash between form-out gear and line feed gear when measured at the highest point of three 120° positions of the form-out gear.

To Adjust: Loosen clamp nuts friction tight and move form-out mechanism by its rear projection to meet requirement. Tighten the three clamp nuts.

FORM-OUT CONTACT TO BELT SPACING (FINAL) (TRACTOR FEED ONLY)

Requirement (A): The contact shall have started to rise off the surface of the belt by some to 0.006 inch when contacting the full width cam lobe.

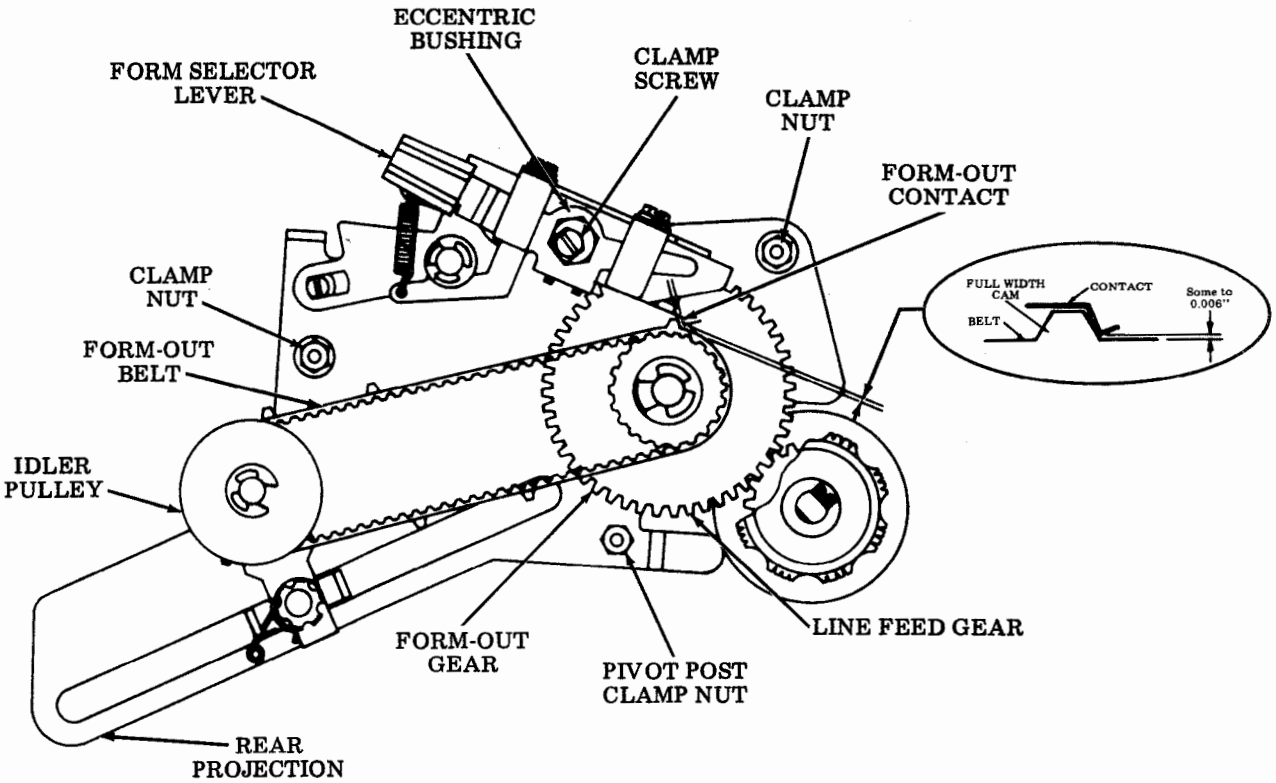

To Check: Latch the line feed clutch. Position form selector lever in the fourth detent position. Move line feed pawls out of engagement with line feed gear. Rotate paper advance knob until the slope part of the contact just touches the full width cam. Re-engage line feed pawls.

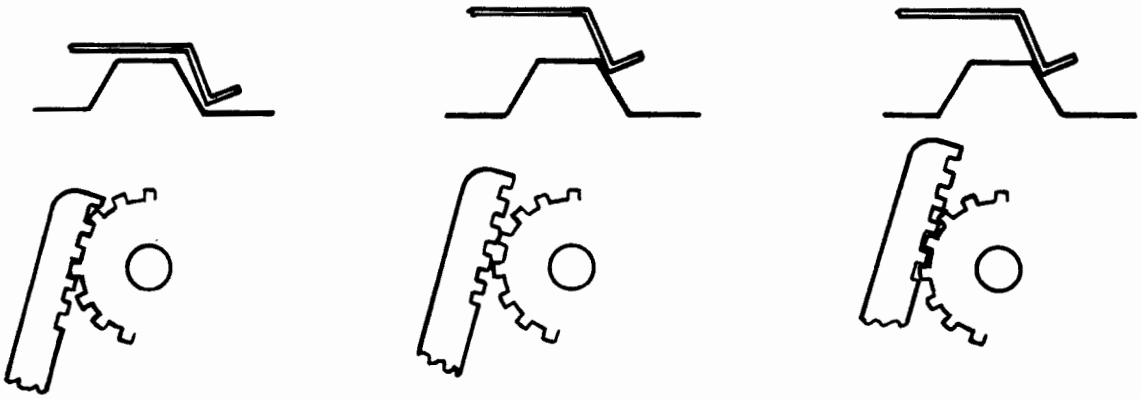

ENGAGED NOT ENGAGED ADVANCED

D. PRINTERS (Cont)

2. LEFT SIDE ASSEMBLIES (Cont)

To Check: (Cont)

The some to 0.006 inch clearance shall be considered met when the following conditions are present:

(1) When the form-out belt idler pulley is rotated CCW (counterclockwise) with a force sufficient to take up the form-out gear and the form-out belt teeth to pulley backlash and then released, the contact tip touches the surface of the belt.

(2) When the form-out belt idler pulley is rotated CW (clockwise) with a force sufficient to take up the form-out gear and the form-out belt teeth to pulley backlash and then released, the contact tip is raised off the surface of the belt by the form-out belt cam.

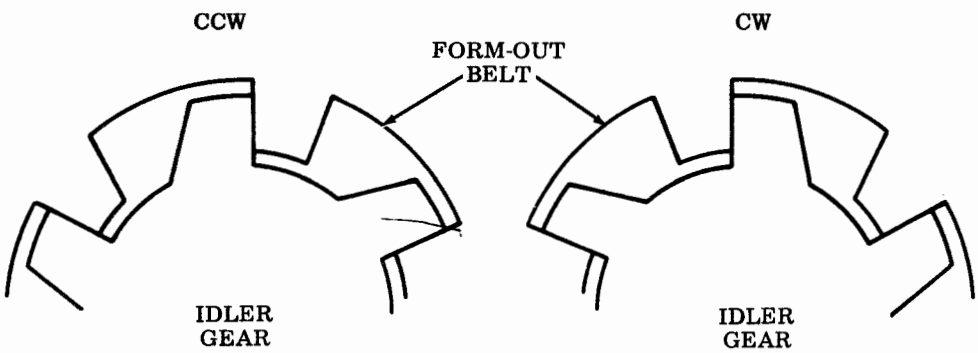

To Adjust: With the eccentric bushing clamp screw friction tight, rotate eccentric bushing to position form-out contact left or right to meet requirement. Tighten eccentric bushing clamp screw.

Requirement (B): The contact point gap shall be 0.015 inch to 0.020 inch with the contact touching the form-out belt surface but not the cam lobe.

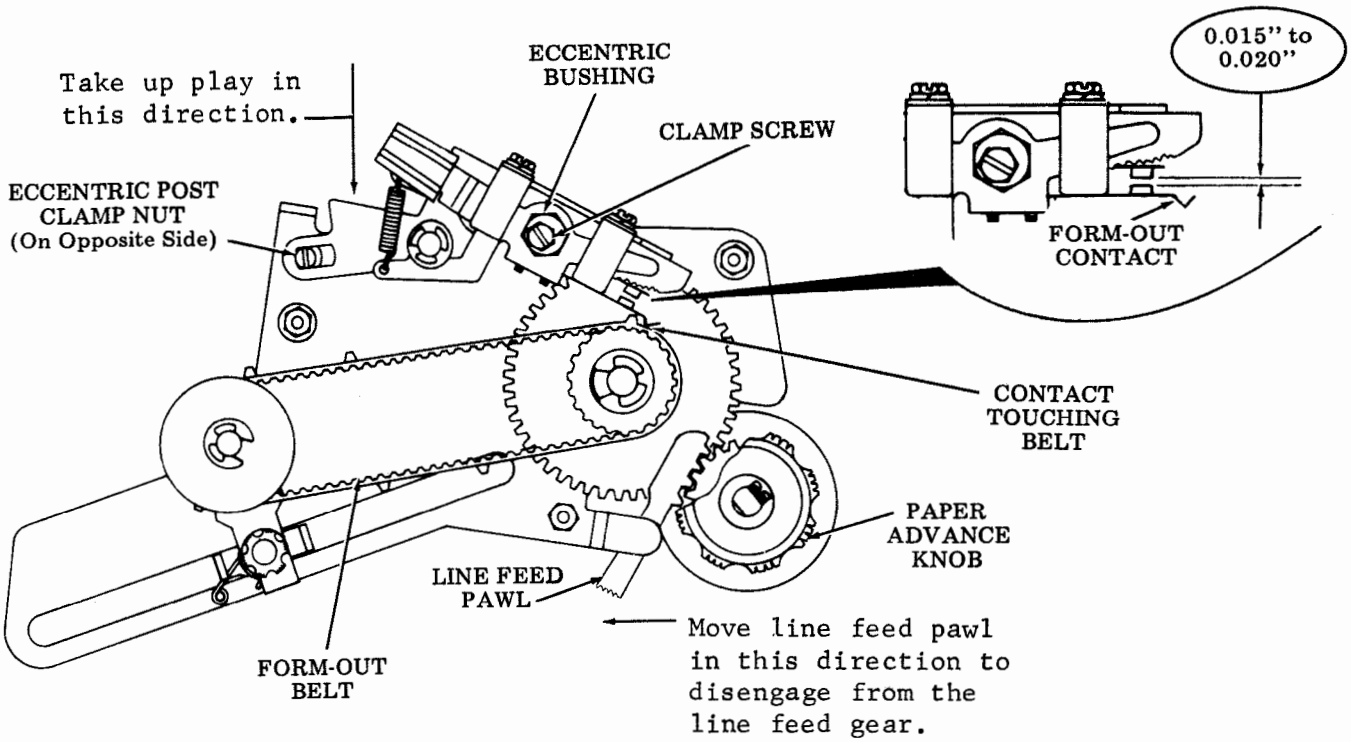

To Check: Move line feed pawls out of engagement with line feed gear and rotate paper advance knob to position form-out belt so that the contact does not touch a cam lobe. Engage line feed pawls.

To Adjust: Loosen eccentric post clamp nut friction tight. Using very light pressure take up the play of the contact housing against eccentric post to move contact up or down to meet requirement. Tighten eccentric post clamp nut.

NOTE: Disengage feed pawls and rotate paper advance knob to reposition the form-out gear to again meet Requirement (A). This step must be performed to properly phase the form-out mechanism.

D. PRINTERS (Cont)

2. LEFT SIDE ASSEMBLIES (Cont)

FORM-OUT CONTACT LATERAL (PRELIMINARY)

Requirement: The form-out contact assembly shall be positioned on the form selector lever such that the form-out contact tip is 0.223 inch ±0.008 inch from the outside surface of the form selector lever.

To Adjust: Loosen the two contact assembly mounting screws and position contact to meet the requirement. Tighten both mounting screws.

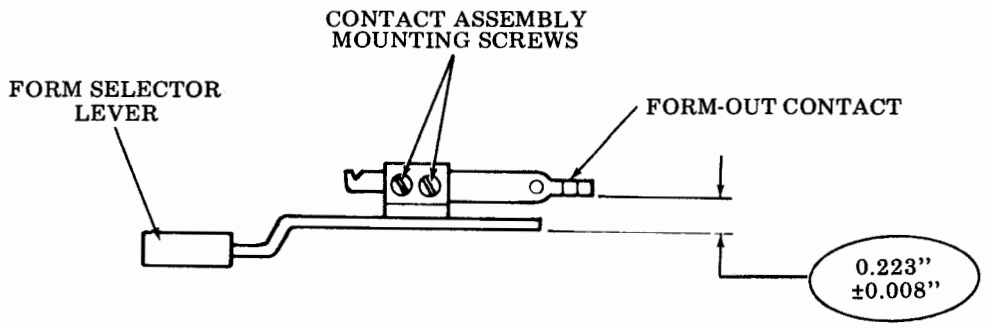

NOTE 1: This adjustment must be made before the form selector lever is assembled to the contact housing bracket.

NOTE 2: Factory adjusted should not normally require adjustment unless contact assembly has been removed.

FORM-OUT CONTACT LATERAL (FINAL)

Requirement: With the form-out belt positioned against flange of the form-out drive gear, the contact should be centered, as gauged by eye, on the short cam lobes when in position no. 4.

To Check: While rotating form-out gear the form-out contact must not touch adjacent cam lobes when in positions 3 and 4.

To Adjust: Disassemble and refine Preliminary adjustment.

3. RIGHT SIDE ASSEMBLIES

Identification -- Friction Feed Printer

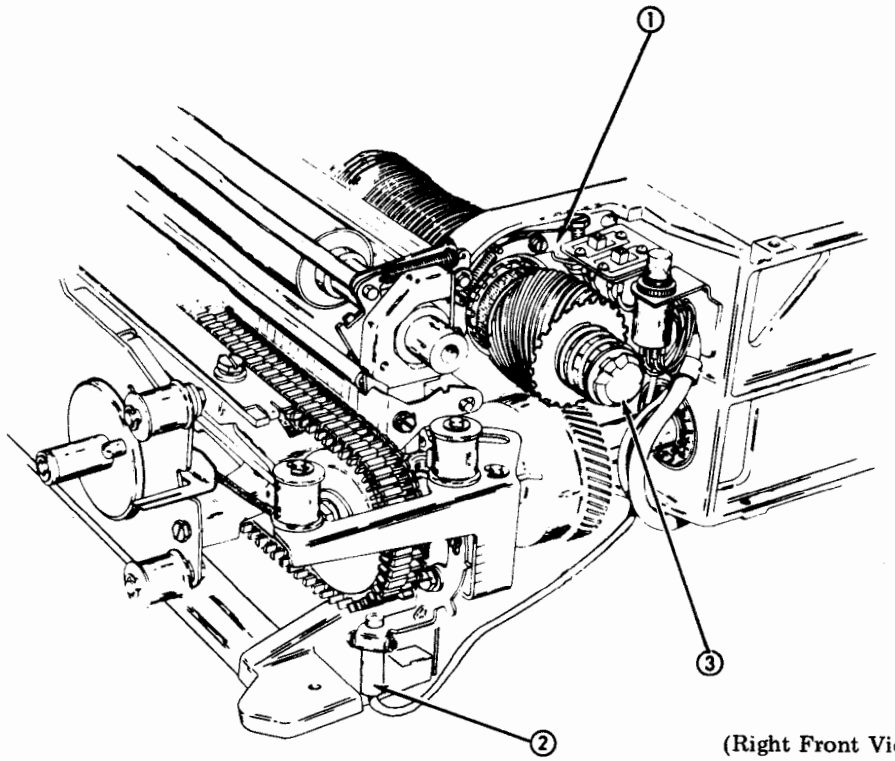

(Right Front View)

ASSEMBLY	ADJUSTMENTS
① Impeller Shaft Sensor	Impeller Shaft Sensor Gap Impeller Shaft Sensor (Preliminary) Impeller Shaft Sensor (Final) -- Under Power
② Flag Sensor	Flag Sensor Gap (Preliminary) Flag Sensor (Preliminary) Flag Sensor (Final) -- Under Power
③ Impeller Shaft	Impeller Shaft to Carrier Phasing (Preliminary) Impeller Shaft to Carrier Phasing (Final)

D. PRINTERS (Cont)

3. RIGHT SIDE ASSEMBLIES (Cont)

Identification -- Tractor Feed Printer

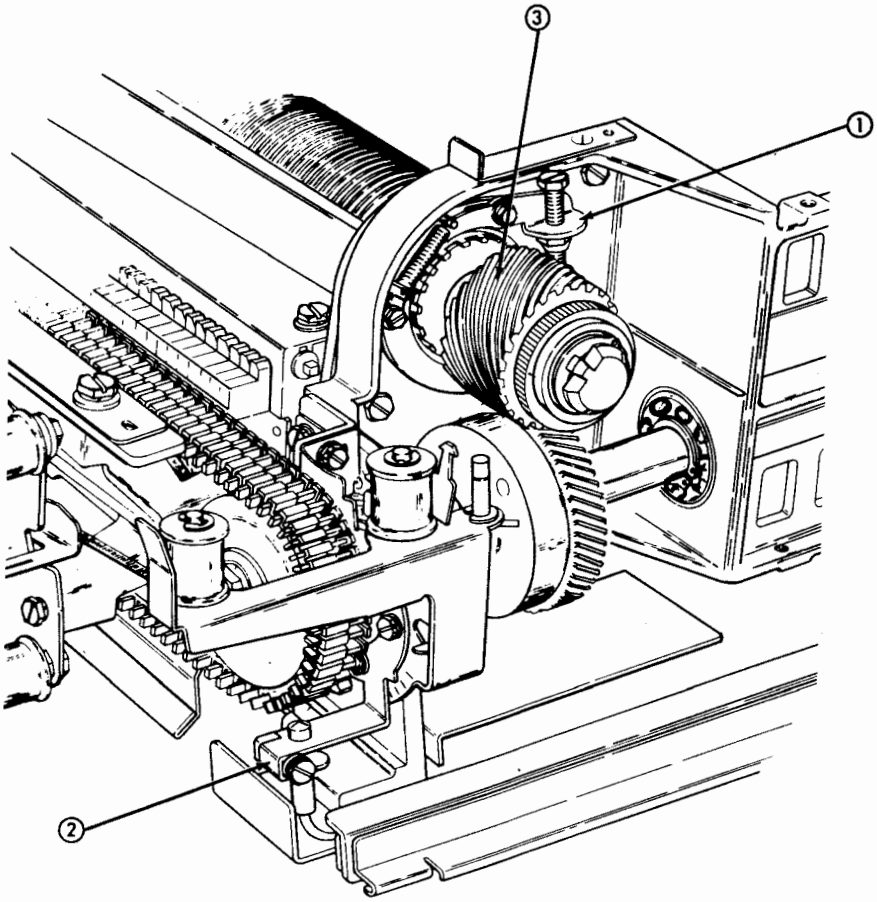

ASSEMBLY	ADJUSTMENTS
①Impeller Shaft Sensor	Impeller Shaft Sensor Gap Impeller Shaft Sensor (Preliminary) Impeller Shaft Sensor (Final) -- Under Power
②Flag Sensor	Flag Sensor Gap (Preliminary) Flag Sensor (Preliminary) Flag Sensor (Final) -- Under Power
③Impeller Shaft Gear	Impeller Shaft to Carrier Phasing (Preliminary) Impeller Shaft to Carrier Phasing (Final)

IMPELLER SHAFT SENSOR GAP

Requirement: 0.008 inch to 0.020 inch between teeth of the timing wheel and the sensor pole piece.

To Adjust: Loosen locking screw. Adjust gap to meet requirement. Tighten locking screw.

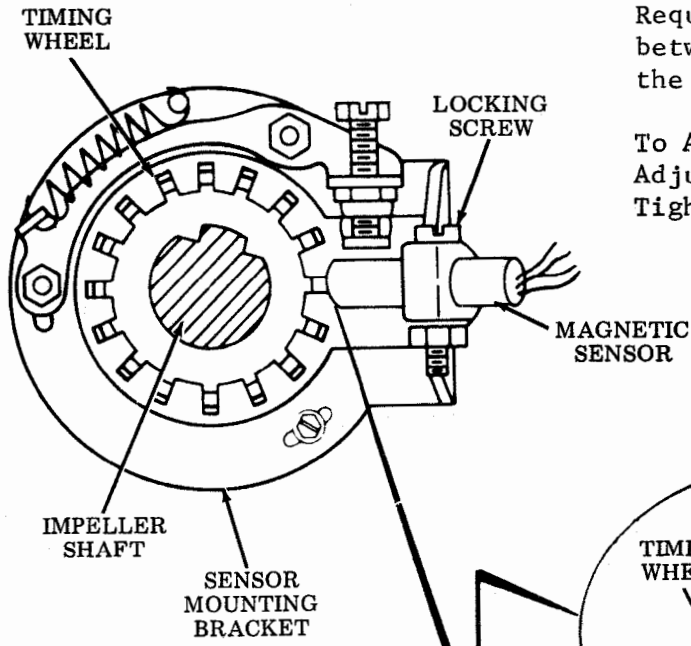

(Left Side View)

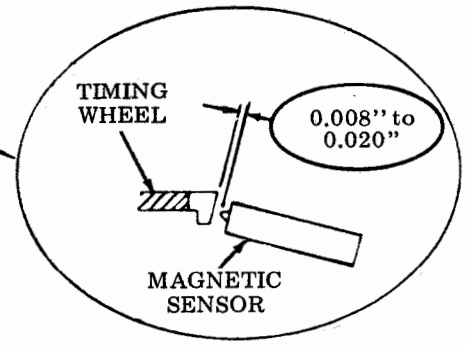

(Right Side View)

80-Column

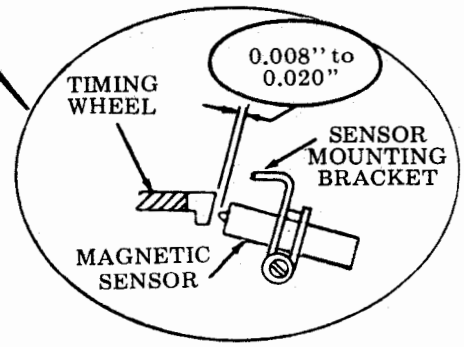

(Right Side View)

132-Column

NOTE: It is preferable to use nonmagnetic gauges to check requirement. Steel gauges are attracted by the sensor magnet making it difficult to gauge the adjustment.

D. PRINTERS (Cont)

3. RIGHT SIDE ASSEMBLIES (Cont)

FLAG SENSOR GAP (PRELIMINARY)

Requirement: There shall be 0.015 inch min clearance between the closest flag and magnetic sensor pole piece and 0.030 inch max clearance between any flag and magnetic sensor.

To Adjust: Loosen the sensor clamp screw and position sensor in its mounting bracket to meet the requirement. Tighten clamp screw.

NOTE: It is preferable to use nonmagnetic gauges to check requirement. Steel gauges are attracted by the sensor magnet making it difficult to gauge the adjustment.

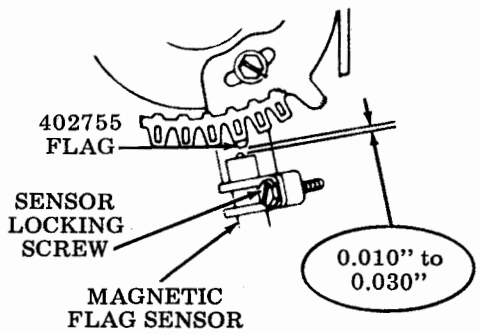

Friction Feed -- 80-Column

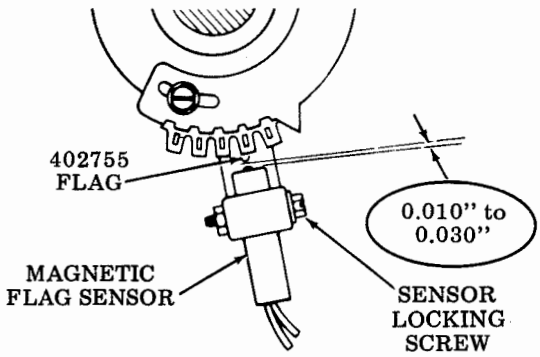

Tractor Feed -- 132-Column

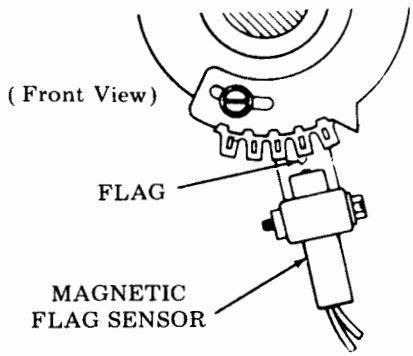

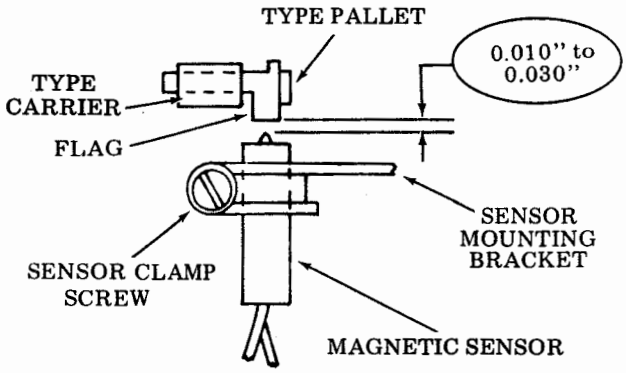

132-Column

IMPELLER SHAFT SENSOR (PRELIMINARY)

Requirement: There shall be a gap of approximately 0.100 inch between the bottom of the adjusting screw head and the top of the sensor mounting bracket tab.

To Adjust: Turn adjusting screw to meet the requirement.

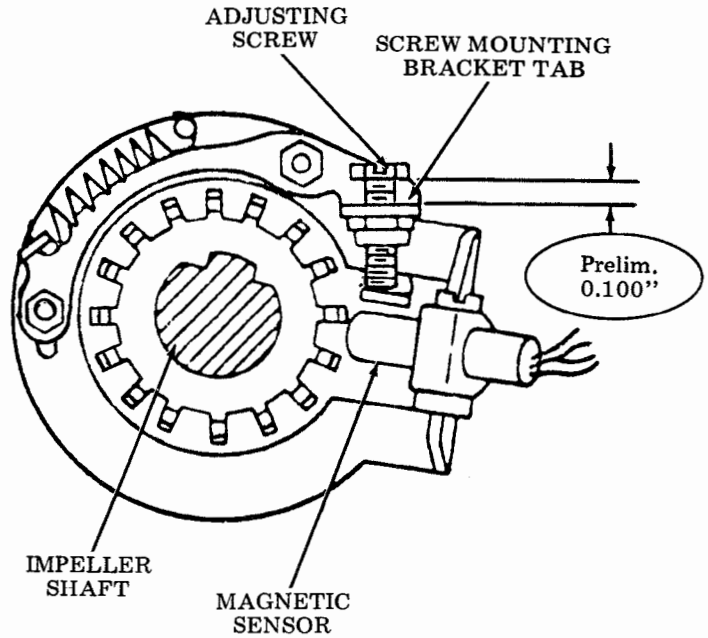

IMPELLER SHAFT SENSOR (FINAL) -- UNDER POWER

Requirement: The impeller sensor is to be positioned 2 to 2-1/4 clockwise turns from a point where any further counter-clockwise motion of adjusting screw would cause a column or columns not to print.

To Adjust: With the unit in test position and printing the font identification symbol, turn impeller sensor adjusting screw COUNTERCLOCKWISE through a range where all columns print (approximately 5 to 10 turns) until a column or columns do not print. Slowly turn adjusting screw CLOCKWISE just until all columns print for at least 10 lines. Turn adjusting screw CLOCKWISE an additional 2 to 2-1/4 turns.

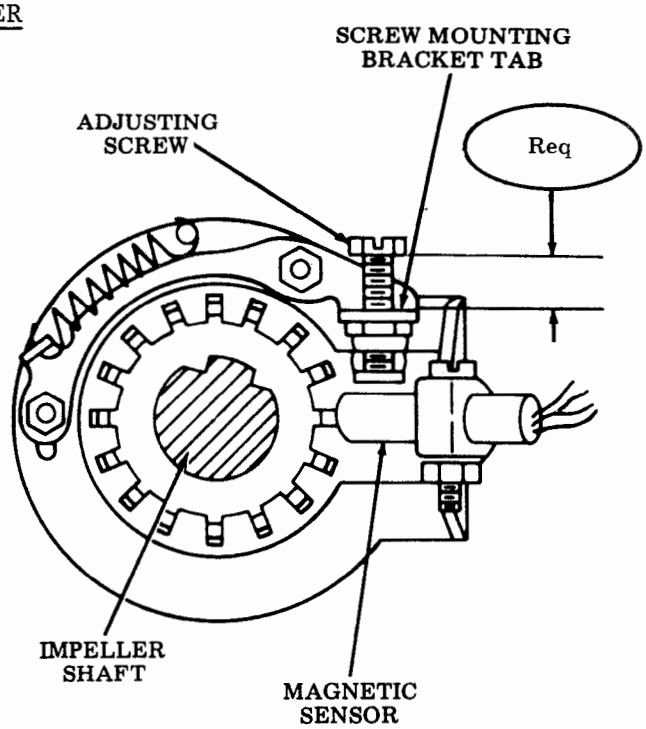

D. PRINTERS (Cont)

3. RIGHT SIDE ASSEMBLIES (Cont)

FLAG SENSOR (PRELIMINARY)

Requirement: Indicator to be at mid-point of the range scale.

To Adjust: With locking screws(s) friction tight adjust magnetic flag sensor to mid range. Leave screws friction tight.

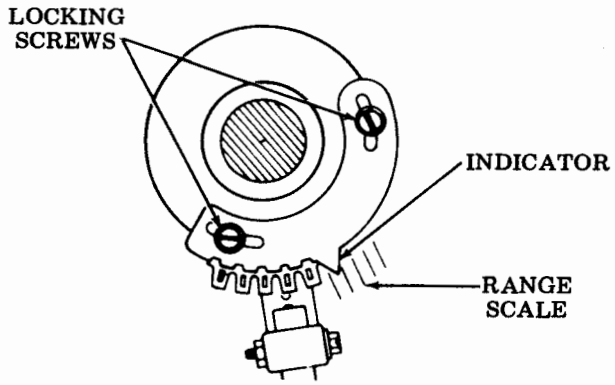

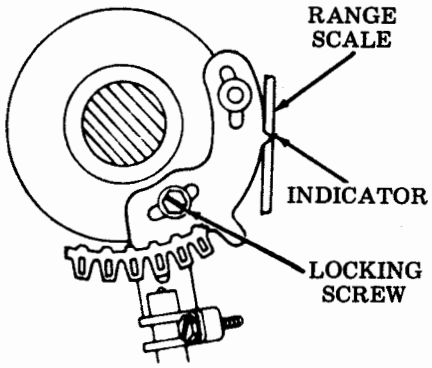

(Front Views)

Tractor Feed Printer

Friction Feed Printer

FLAG SENSOR (FINAL) -- UNDER POWER

Requirement: The flag sensor must be in approximately the midpoint between failure points of its range.

To Check: Print some font identification character using the test switch.

To Adjust: Loosen locking screw(s) friction tight. While printing font identification symbol, move indicator counterclockwise to point where printing stops or errors occur. (Note reading on range scale.) Move indicator clockwise to point where printing again stops or errors occur. (Note reading on range scale.) Set indicator midway between these points as gauged by eye. Tighten locking screw(s).

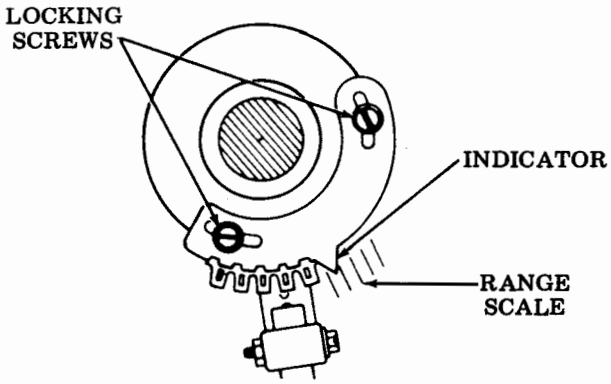

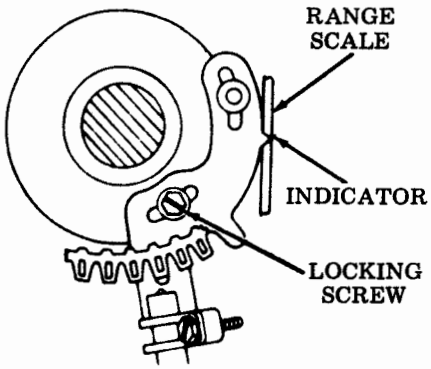

(Front Views)

Tractor Feed Printer

Friction Feed Printer

IMPELLER SHAFT TO CARRIER PHASING (PRELIMINARY)

Requirement: Right edge of knurled adjusting collar to be flush with step on threaded collar.

To Adjust: Rotate knurled collar while pushing impeller shaft gear to the left.

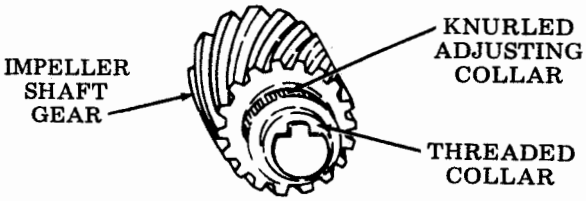

IMPELLER SHAFT TO CARRIER PHASING (FINAL -- UNDER POWER)

Requirement: Printed characters should line up centrally with the print hammers.

To Adjust: Print some font identification characters using the test switch. Turn printer off, disconnect ac power. If the right portion of the character is missing, turn the knurled adjusting collar clockwise while holding impeller shaft gear away from collar.

NOTE: Because of the strong spring tension, it may be necessary to pry the gear with a screwdriver (as shown in Friction Feed diagram). Do this carefully so the screwdriver does not slip and damage any parts.

If the left portion of the character is missing, turn the knurled adjusting collar counterclockwise. Turn on ac power and repeat test to make sure requirement is met.

When multicopies are used the phasing should be adjusted to minimize clipping on the last copy with no clipping on the original.

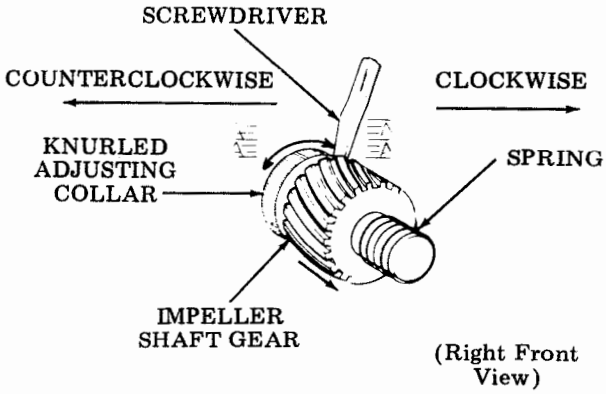

Friction Feed Printer
(Old Style)

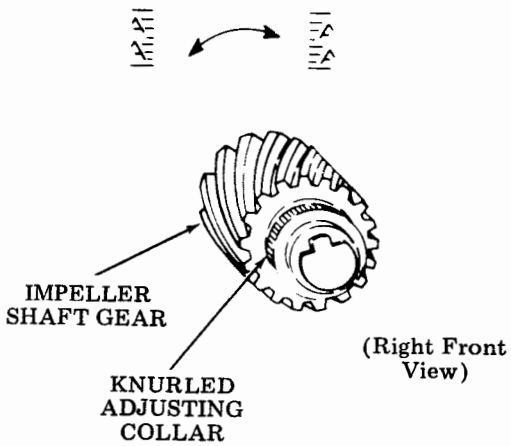

Tractor Feed Printer
and
Friction Feed Printer
(New Style)

D. PRINTERS (Cont)

4. FRONT, TOP AND BACK ASSEMBLIES

Identification -- Friction Feed Printer

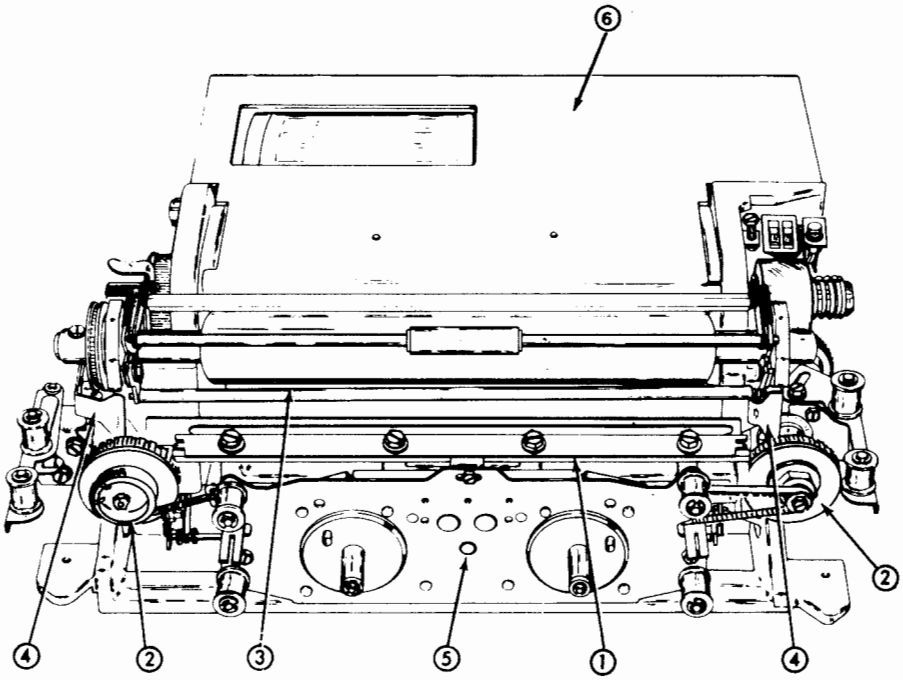

(Front View)

ASSEMBLY	ADJUSTMENTS (If Any)
① Backup Bar	Backup Bar (Final
② Carrier Sprockets	Left Carrier Sprocket Right Carrier Sprocket
③ Paper Positioning Shaft	Paper Positioner Roller -- Under Power
④ Ribbon Guide	Ribbon Guide -- Final
⑤ Ribbon Feed Assembly	Ribbon Feed Drive Belt Tension Ribbon Mechanism Drag
⑥ Paper Out	Low Paper Switch
⑦ Type Carrier	Type Carrier Pallet Alignment
⑧ Power Supply	Power Supply Voltage

Identification -- Tractor Feed Printer

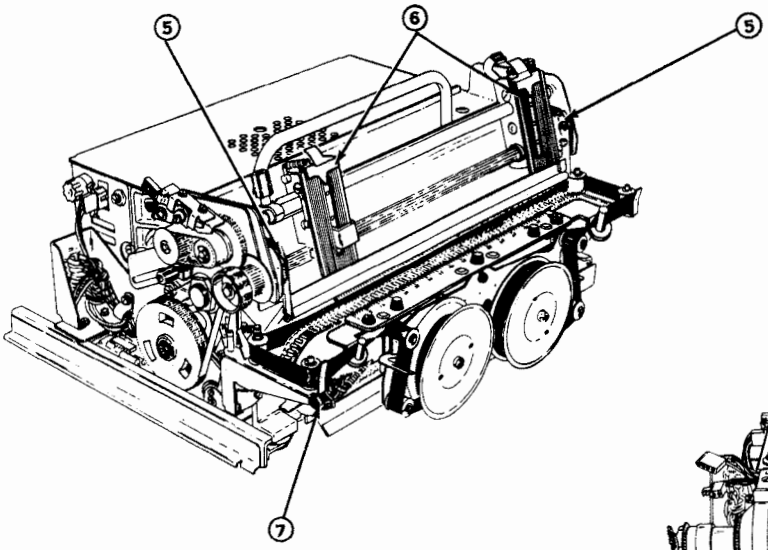

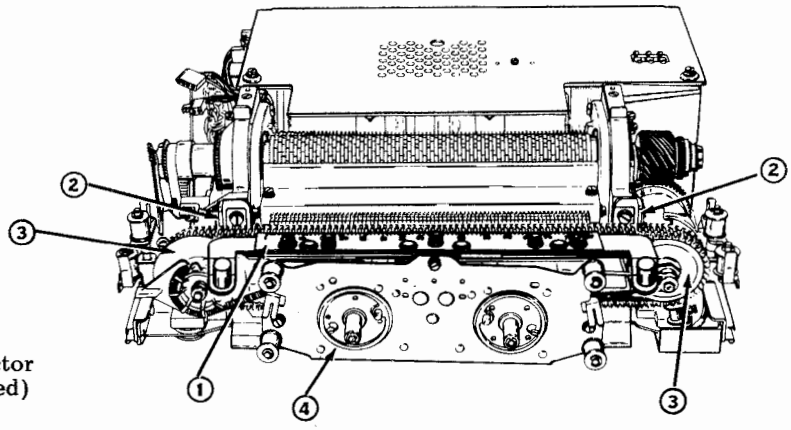

(Front View — Tractor Mechanism Removed)

ASSEMBLY	ADJUSTMENTS (If Any)
① Backup Bar	Backup Bar (Final)
② Ribbon Guides	Ribbon Guides -- Final
③ Carrier Sprockets	Left Carrier Sprocket Right Carrier Sprocket
④ Ribbon Feed Assembly	Ribbon Feed Drive Belt Tension Ribbon Mechanism Drag
⑤ Paper Positioner	Paper Positioner Roller -- Under Power
⑥ Tractor Feed	Tractor Phasing Tractor Lid
⑦ Paper-Out	Paper-Out Switch (80-Column) Paper-Out Switch (132-Column)
⑧ Type Carrier	Type Carrier Pallet Alignment
⑨ Power Supply	Power Supply Voltage

D. PRINTERS (Cont)

4. FRONT AND TOP ASSEMBLIES (Cont)

RIBBON FEED DRIVE BELT TENSION

Apply a force of 5 oz (for 80-column printer), 8 oz (for 132-column) perpendicular to the drive belt at a point near the ribbon mechanism frame.

Requirement: 80-Column Printer
Belt should deflect 1/8 inch to 3/8 inch from a line tangent to both pulleys.

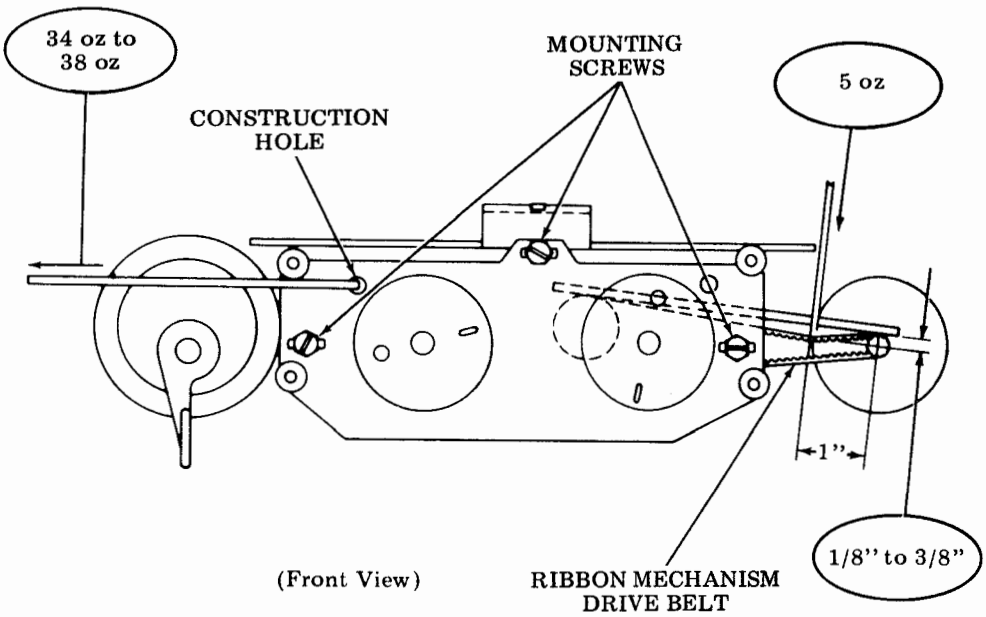

Requirement: 132-Column Printer
There shall be
Min 11/32 inch---Max 1/2 inch
between the outside surfaces of the drive belt when a force of 8 oz is applied adjacent to the ribbon mechanism frame.

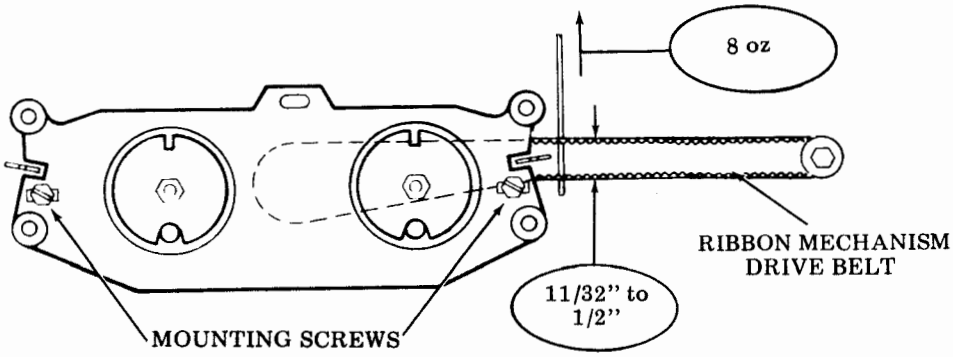

To Adjust: 80- and 132-Column Printers
Loosen mounting screws (80-Column), nuts (132-Column) to allow mechanism to move freely to right or left. Pull against contruction hole to left with a force of 34 oz to 38 oz. Tighten mounting screws (or nuts) with tension applied.

RIBBON MECHANISM DRAG (EARLY DESIGN)

Requirement: It should take 3 to 8 ounces to start the free wheeling ribbon drive disc moving when pulling tangentially on its drive pin. To check the other ribbon drive disc, reverse the ribbon mechanism by pulling up on the reversing lever adjacent to the free wheeling drive disc and manually rotating the impeller shaft clockwise as viewed from the right side of the printer until reversal occurs. The other ribbon drive disc is now the free wheeling disc and may be checked.

To Adjust: Remove ribbon drive disc assembly as shown and replace spring washer. Reassemble and recheck requirement.

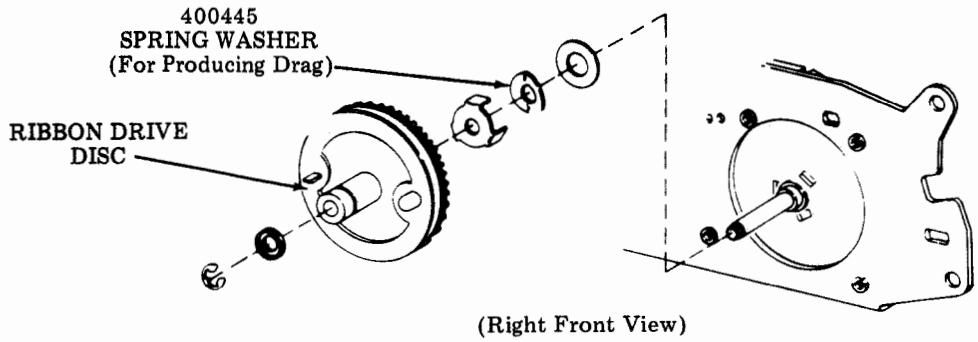

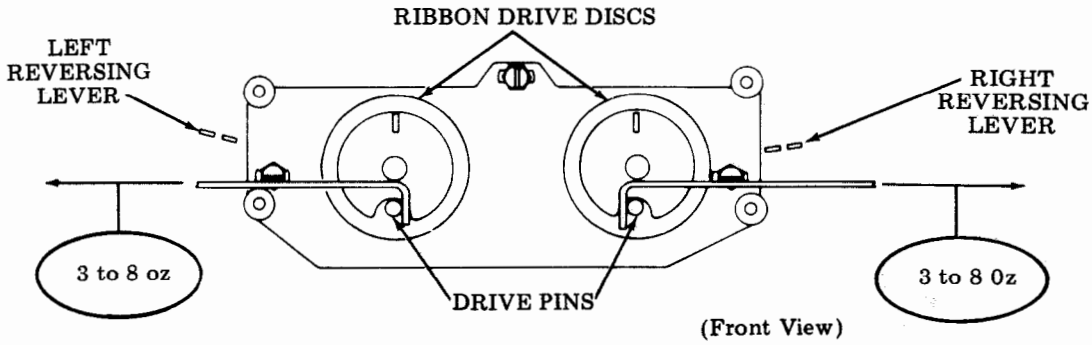

NOTE: Late Design -- No adjustment required if 402816 spool mounting disc assemblies are present.

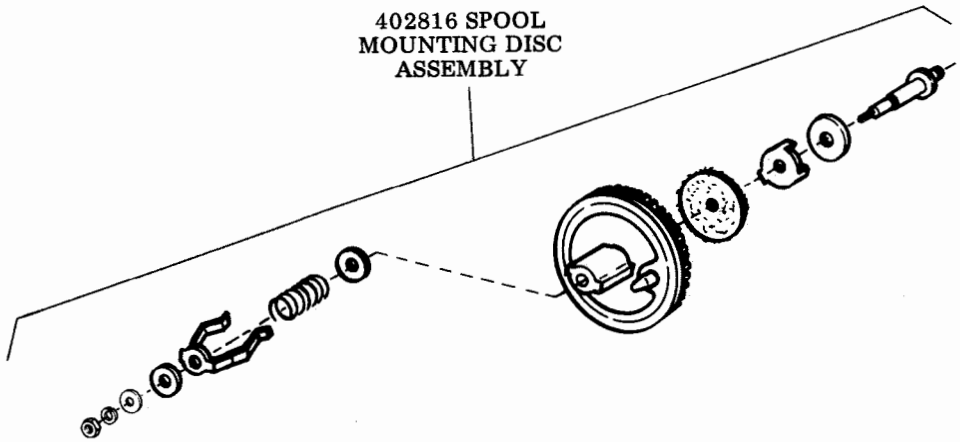

D. PRINTERS (Cont)

4. FRONT AND TOP ASSEMBLIES (Cont)

BACKUP BAR (FINAL)

NOTE: The backup bar is adjusted to give optimum print quality at room ambient of 65 degrees to 85 degrees Fahrenheit. When operated at lower temperatures, print quality may be light until the unit has run at least one hour and has reached operating temperature. At ambient temperatures above 85 degrees Fahrenheit, there may be a reduction in ink ribbon life.

- With ac power off, remove ribbon.
- Install single-ply paper.
- Remove type carrier.
- Install new ribbon.
- Insert 402868 adjusting gauge on type carrier track with front edge against backup bar.

On 80-column printer position gauge so it is centered in relation to no. 1 and no. 80 print hammers.

On 132-column printer position gauge first on left side, then on right side.

NOTE: On 80-column tractor feed unit remove the carrier top guide before installing gauge.

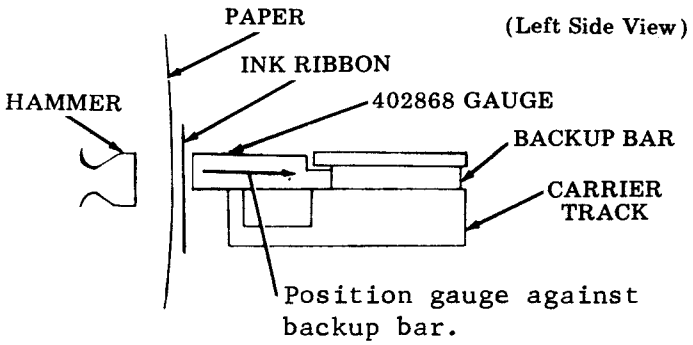

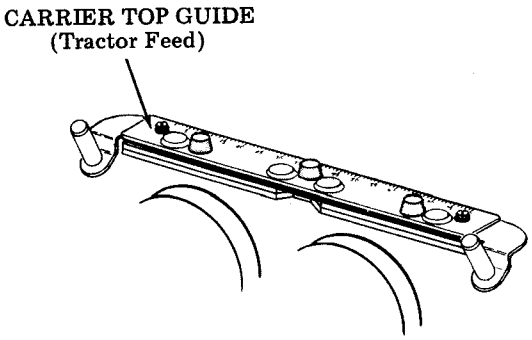

Requirement: While printing internal test message, Areas 3 and 5 should be just visible. Areas 2, 4, and 6 should not be visible. Print density in Areas 1 and 7 should be approximately equal on a properly aligned and adjusted unit.

To Adjust: With the unit turned on, hold the 402868 gauge firmly against backup bar. Place printer test switch in the on position and pass a steel object over the flag sensor to initiate hammer firing. The bar gauge should be approximately centered with the hammer bank (on 80-column unit).

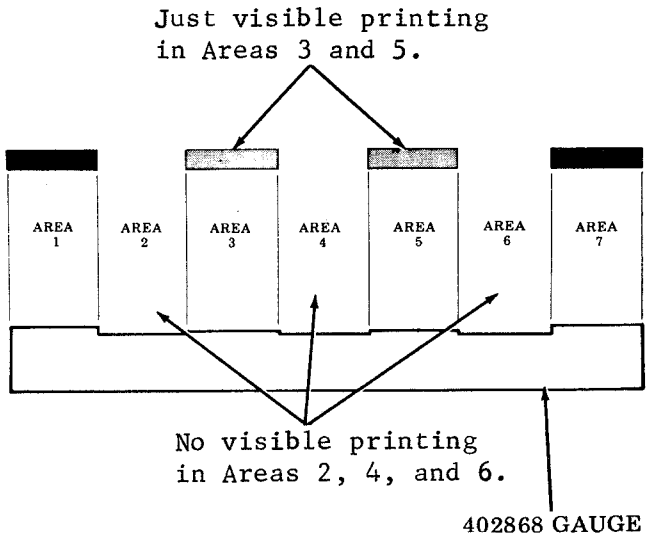

On 80-column units: Loosen four backup bar mounting screws friction tight and turn two adjusting screws to print only Areas 1 and 7. From this point turn both left and right adjusting screws clockwise until Areas 3 and 5 meet requirement. Tighten four backup bar mounting screws and check requirement.

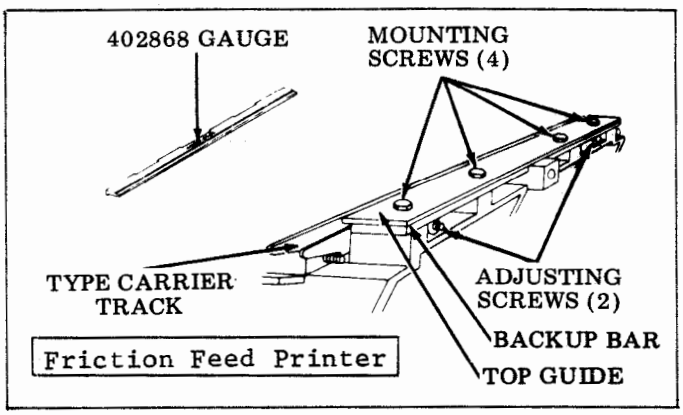

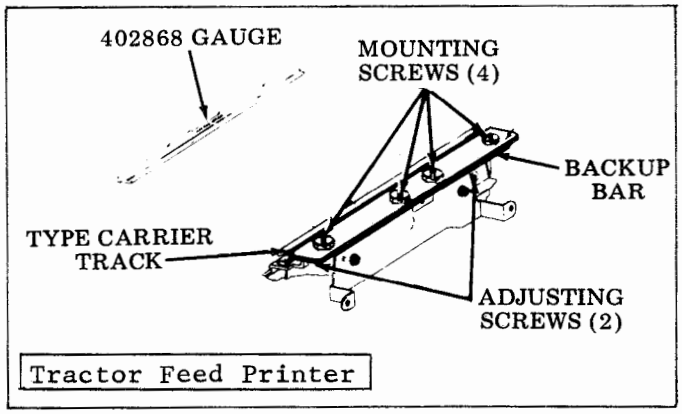

On 132-column units: Loosen the five track assembly mounting screws friction tight. Position the track assembly to meet the requirement using the track assembly adjusting screws. Tighten the five mounting screws securely.

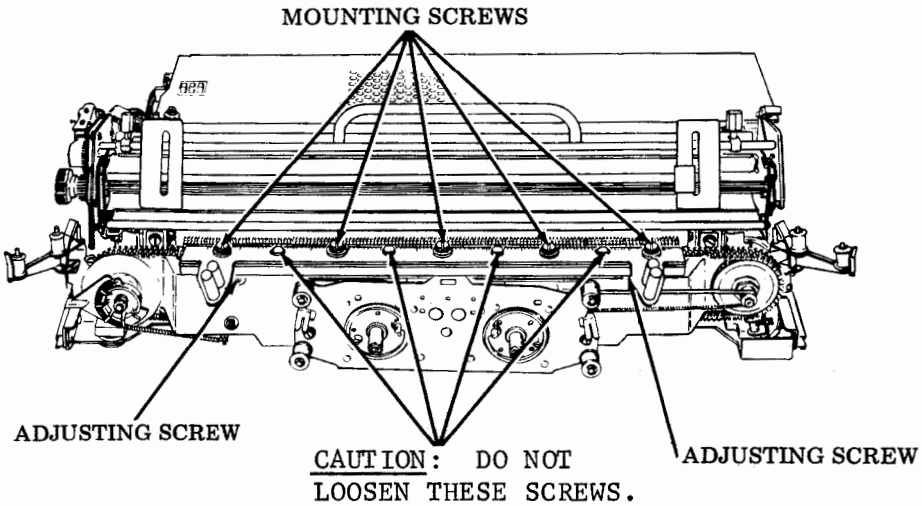

NOTE: Each time the Backup Bar (Final) adjustment is made, the following adjustments must also be made:

Left and Right Carrier Sprockets (Pages 6-42 and 6-43)
Left and Right Ribbon Guides (Pages 6-44 and 6-45).

D. PRINTERS (Cont)

4. FRONT AND TOP ASSEMBLIES (Cont)

Installation of 402617 Gauge -- Preliminary to Performing the Left and Right Sprocket and the Left and Right Ribbon Guides Adjustments on 80-Column Printers

NOTE: 402617 gauge can be used on friction and tractor feed units. 402610 gauge can be used on friction feed only.

a. Loosen left and right ribbon guide mounting screws friction tight and position guides by hand to their rear limits.

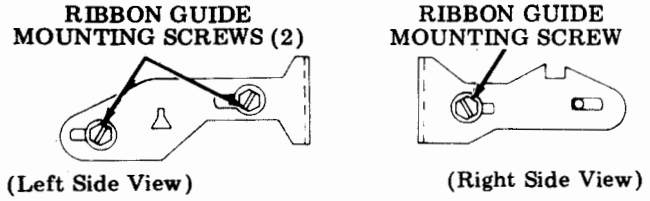

Friction Feed Printer

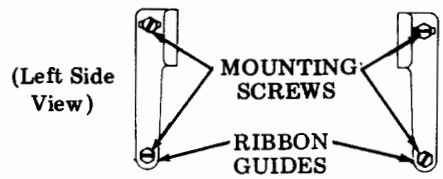

Tractor Feed Printer

b. Back off left carrier sprocket by turning nut at front of sprocket counterclockwise until nut is almost flush with end of shaft. While turning nut, hold shaft by using an Allen wrench in the socket at end of shaft.

c. Back off right carrier sprocket by loosening two hub clamp screws (one screw and one nut on some printers) one turn each, then turning nut at front of sprocket counterclockwise until nut clears face of sprocket. Leave clamp screws (or nut and screw) loosened at this time.

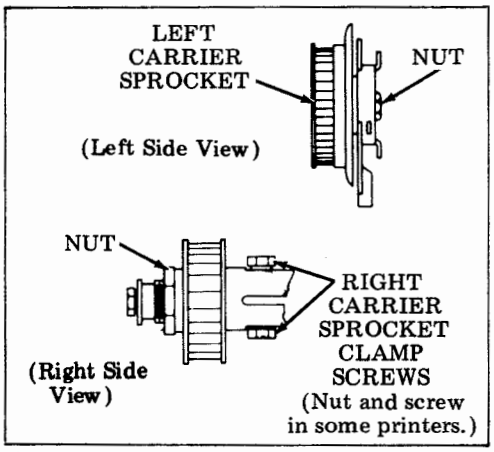

d. Install 402617 gauge and perform Ribbon Guide (Preliminary), Left Carrier Sprocket, and Right Carrier Sprocket adjustments. Check the Ribbon Guide (Final) adjustment.

- With ac power off, remove paper and ribbon.
- With type carrier removed, insert 402617 gauge on type carrier track with front edge against backup bar, under top guide. Position gauge so protrusions at rear line up with no. 1 and no. 80 print hammers.

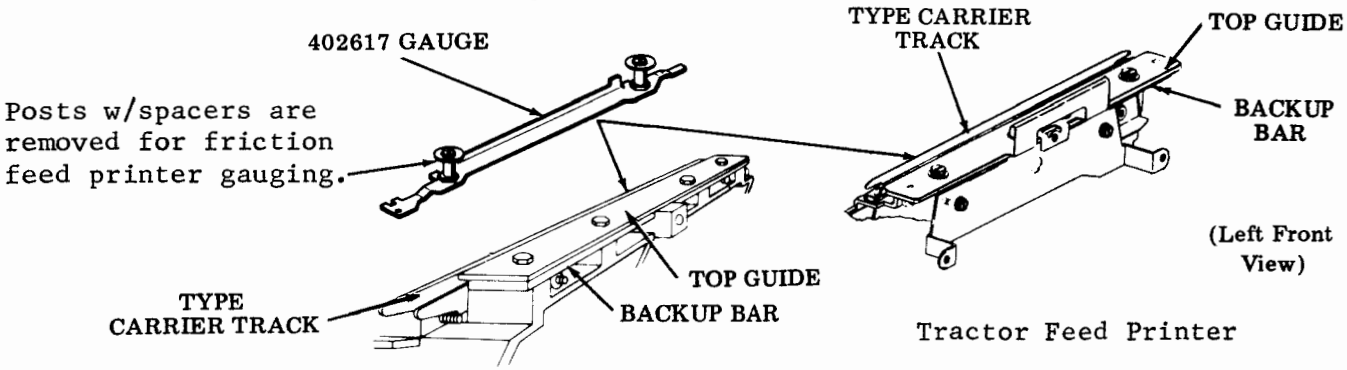

Tractor Feed Printer

Friction Feed Printer

Installation of 402716 and 402717 Gauges -- Preliminary to Performing the Left and Right Sprocket and Left and Right Ribbon Guides Adjustments on 132-Column Printers

a. Turn ac power OFF; remove paper and ribbon.
b. Remove type carrier per instructions on cover.
c. Position 402716 (left) and 402717 (right) gauges on top of the track and against the backup bar.

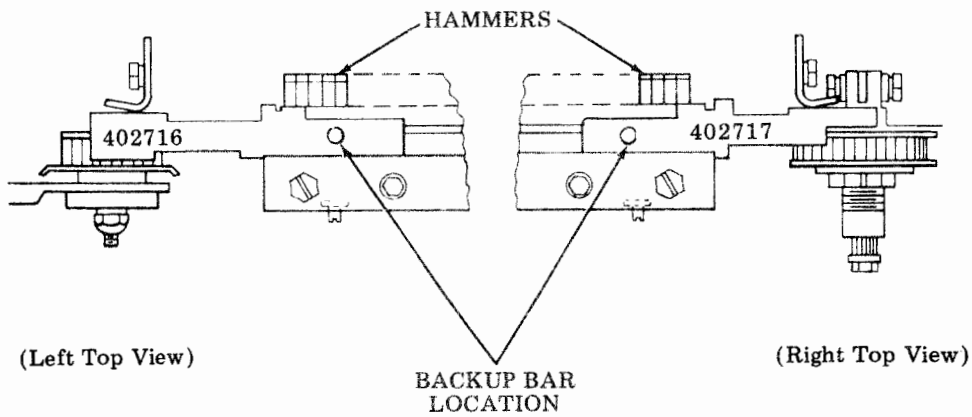

D. PRINTERS (Cont)

4. FRONT AND TOP ASSEMBLIES (Cont)

LEFT CARRIER SPROCKET (80-COLUMN PRINTER)

NOTE: See Page 6-40 for installation of gauge prior to making this adjustment.

To Check: Rotate carrier release lever clockwise until rear rim of sprocket just touches bottom of gauge. Take up play in sprocket assembly evenly to rear of printer.

Requirement: Rear surface of sprocket flange should clear adjusting gauge by
Min some--- Max 0.005 inch.

To Adjust (Friction Feed): Position sprocket by turning nut at front of sprocket to meet requirement while holding shaft with an Allen wrench.

To Adjust (Tractor Feed): Position the sprocket by turning nut at front of sprocket to meet requirement.

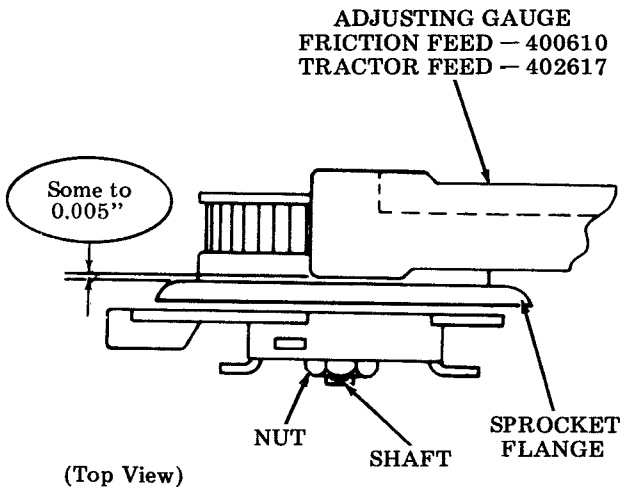

Left Carrier Sprocket

LEFT CARRIER SPROCKET (132-COLUMN PRINTER)

NOTE: See Page 6-41 for installation of gauge prior to making this adjustment.

Requirement: The rear surface of the sprocket flange should clear the adjusting gauge by
Min some---Max 0.006 inch
at its closest point when the sprocket is in its normal operating position.

To Adjust: Position the 402716 gauge against the backup bar. While holding the finger lever of the sprocket hub parallel to the track assembly and rotating the sprocket, turn the adjusting nut clockwise until the base of the sprocket flange just contacts the gauge at its closest point. Turn adjusting nut back counterclockwise some to 45°. This is equivalent to some to 0.004 inch. Remove gauge; install type carrier.

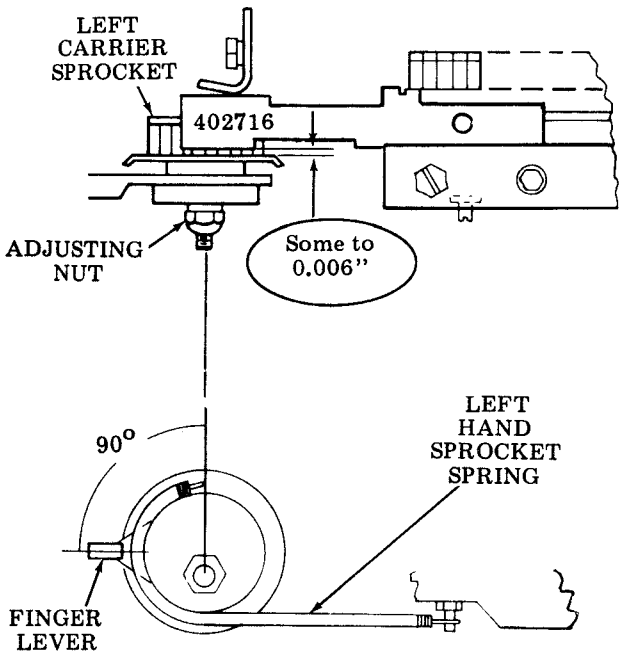

RIGHT CARRIER SPROCKET (80-COLUMN PRINTER)

NOTE: See Page 6-40 for installation of gauge prior to making this adjustment.

Requirement: Rear surface of sprocket should clear adjusting gauge by
Min some---Max 0.005 inch.

To Adjust: Loosen two hub clamping screws (or one screw and one nut if so equipped). Turn nut at front of sprocket to meet requirement. Tighten hub clamping screws (or screw and nut). Remove gauge; install type carrier.

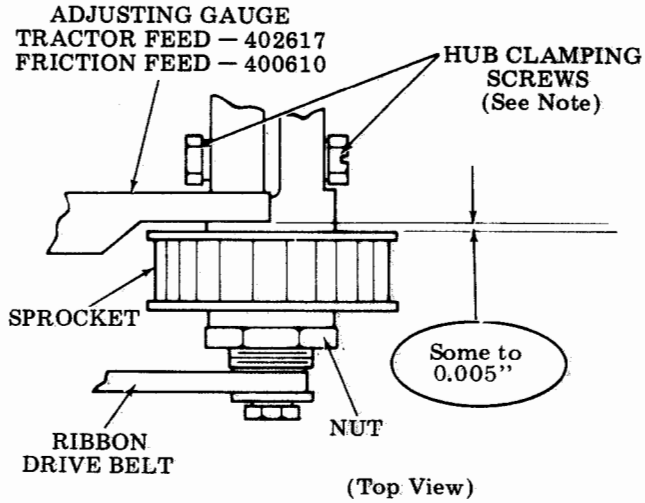

Right Carrier Sprocket

NOTE: Some printers have one hub clamping screw and one hub clamping nut instead of two hub clamping screws.

RIGHT CARRIER SPROCKET (132-COLUMN PRINTER)

NOTE: See Page 6-41 for installation of gauge prior to making this adjustment.

Requirement: The rear surface of the right carrier sprocket flange should clear the gauge by
Min some---Max 0.005 inch
at its closest point.

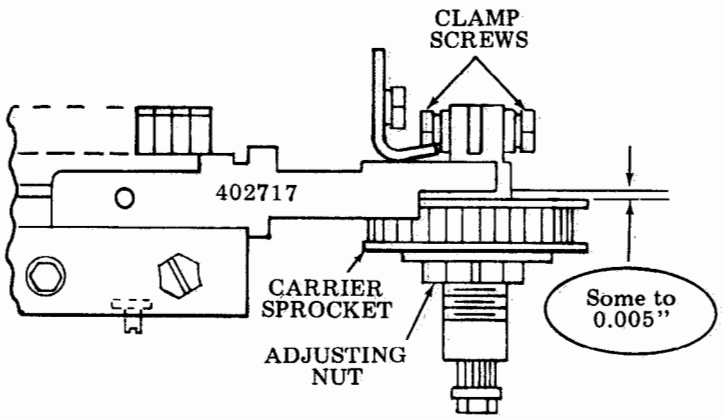

To Adjust: Position the 402717 gauge against the backup bar. Turn the split adjusting nut clockwise until the rear surface of the sprocket flange just contacts the gauge. Turn the adjusting nut back counterclockwise some to 45°. This is equivalent to some to 0.004 inch. Tighten the two hub clamp screws securely. Remove gauge; install type carrier.

D. PRINTERS (Cont)

4. FRONT AND TOP ASSEMBLIES (Cont)

RIBBON GUIDE (PRELIMINARY)

Requirement: The right and left ribbon guides should just touch gauge.

To Adjust: Loosen left and right ribbon guide mounting screws firction tight. With gauge held by hand against the backup bar, push right and left ribbon guides by hand into contact with guides. Tighten mounting screws.

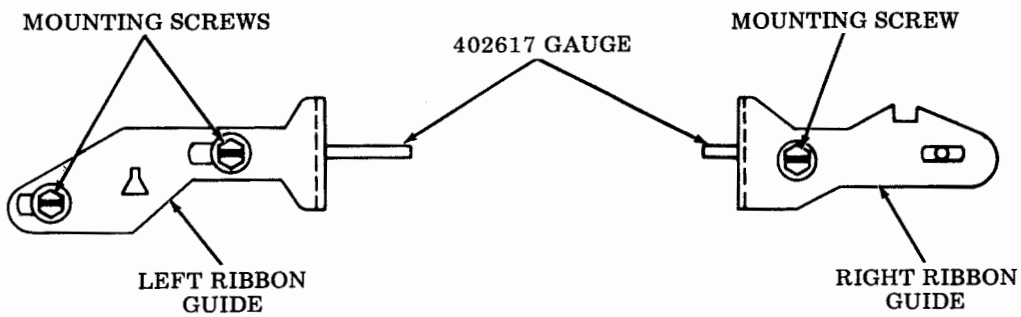

Friction Feed Printers

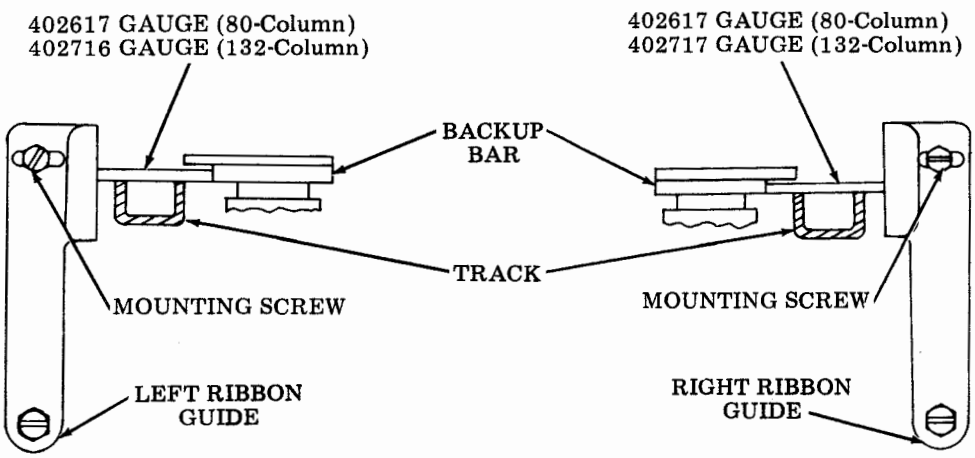

Tractor Feed Printers

RIBBON GUIDE (FINAL)

Requirement (A): There shall be
Min 0.010 inch clearance
between the ribbon guides and the face of a flag pallet on carriers having three fonts; face of a font identification pallet on carriers having two fonts.

To Adjust: Loosen ribbon guide mounting screws friction tight. Position guide to meet Requirement (A). Tighten mounting screws. Repeat the procedure with the other ribbon guide.

Requirement (B): There shall be
Min 0.006 inch clearance
between ribbon guides and all pallet faces.

To Adjust: Seat pallets against rear surface of the front flange of the left sprocket.

NOTE: This adjustment is a final operational check to assure adequate clearance between type pallets and ribbon guides. Too much clearance between pallets and ribbon guides may cause ribbon smudge on the paper, making it difficult to make the Paper Positioning Roller adjustment.

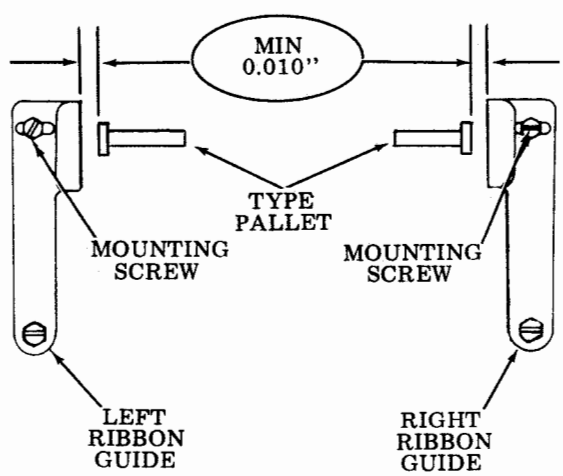

D. PRINTERS (Cont)

4. FRONT AND TOP ASSEMBLIES (Cont)

RIBBON TRACKING (For tractor feed printers equipped with new ribbon tracking parts)

Requirement: If a new ribbon does not track as described, the roller posts should be checked for squareness. The posts carrying the front roller must be vertical (in reference to the ribbon guide top plate) as gauged by eye. The posts carrying the rear rollers must be vertical in the front to rear direction and the right roller should lean towards the right by a slight amount (less than 1°) and the left roller should lean towards the left by a slight amount (less than 1°).

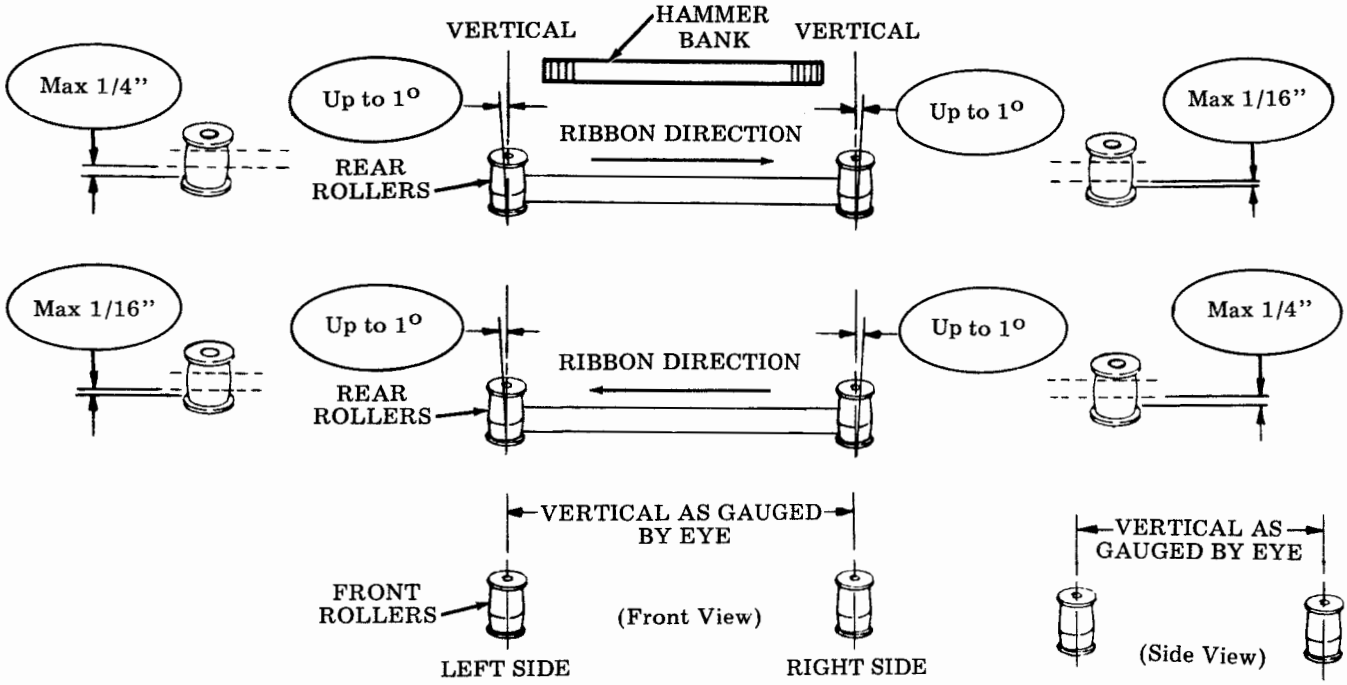

To Check: Using a new ribbon and with the unit running, check the position of the ribbon on the rear rollers of the right and left ribbon guide arms as follows:

If the ribbon is being wound on the right-hand spool, the ribbon should ride against the lower flange of the right roller; however, it should not ride either so low as to cause a permanent curl to form in the ribbon or higher than 1/16 inch above the lower flange. For the left roller, the ribbon should ride with no curl to 1/4 inch above the lower flange.

If the ribbon is being wound on the left-hand spool, the ribbon should ride against the lower flange of the left roller; however, it should not ride either so low as to cause a permanent curl to form in the ribbon or higher than 1/16 inch above the lower flange. For the right roller, the ribbon should ride with no curl to 1/4 inch above the lower flange.

If the rollers do not meet the requirement or the ribbon is not tracking properly, the vertical alignment of the roller posts may be refined. To lower the ribbon track, increase the amount the rear rollers lean outwards (the right roller to the right and the left roller to the left). To raise the ribbon track do the opposite. Caution must be used not to overadjust. A 1/4 inch spin-tight socket wrench will slip over the roller post and can be used for adjusting.

PAPER POSITIONER ROLLER -- UNDER POWER

Requirement (A): The paper shall be positioned as close to ribbon as possible without causing printed copy to become illegible due to ribbon smudging after a one minute printer idle period.

Requirement (B): There shall be no smudge when printing a text character (not font or identification symbol).

These requirements do not apply when printing within two lines of a fold of the fan-fold paper.

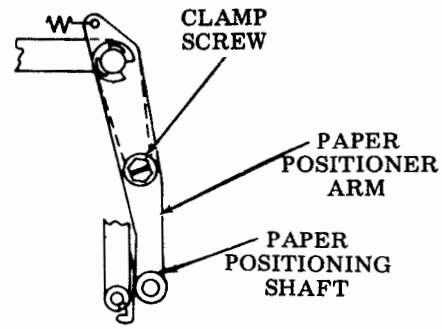

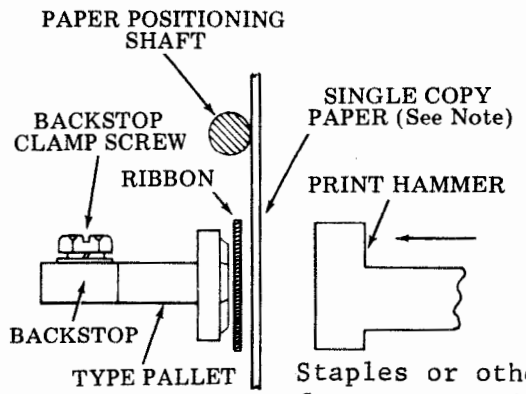

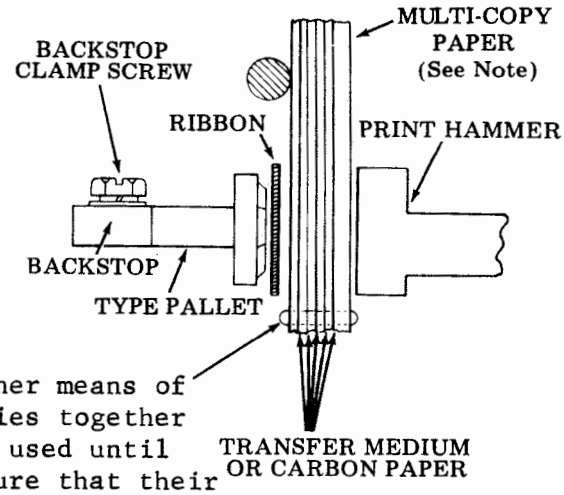

Staples or other means of fastening copies together should not be used until tested to insure that their presence will not interfere with the ribbon, print hammers, or type pallets.

To Adjust: Loosen right and left eccentric clamp screws friction tight. Rotate eccentrics to meet the requirement. Tighten eccentric clamp screws.

NOTE 1: The factory final adjustment is made with a standard original plus three copies paper. Upon installation a refinement of this adjustment may be necessary dictated by the actual paper weight and number of copies being used.

NOTE 2: The printer will accommodate from (1) original to original plus (5) copies. It is recommended that a maximum of 12 pounds basic weight white bond paper (continuous without splices) be used with 8 pound Tab Black carbon paper interleaved. Use of a heavier paper than this, particularly in the upper plies, is not recommended. Using the above paper the original and up to (5) copies will print legibly using a Monocase ASCII type font. The original and up to (3) copies will print legibly using an Up-Low ASCII type font. In any case where it is desired to vary from the above, the variation should be tried for feasibility in such areas as copy legibility and paper handling.

D. PRINTERS (Cont)

4. FRONT AND TOP ASSEMBLIES (Cont)

TRACTOR PHASING (TRACTOR FEED ONLY)

Requirement: The phasing marks on the right and left tractors shall be in line with each other.

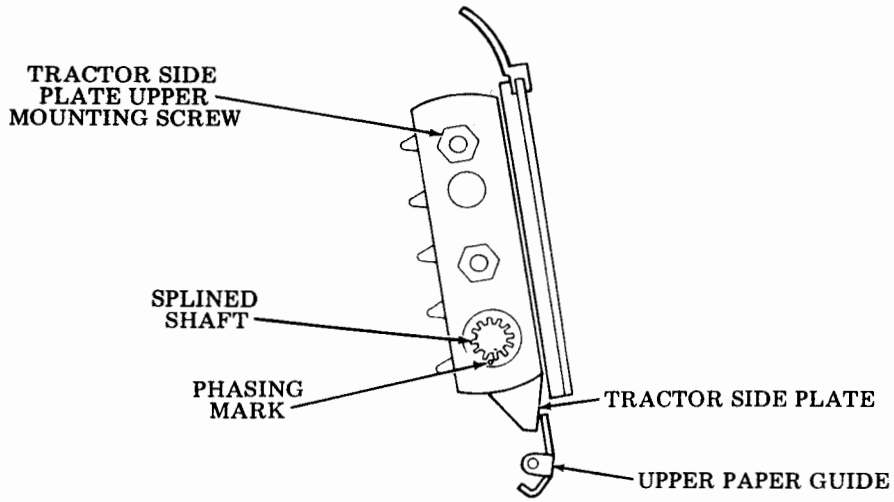

To Adjust: Remove left tractor from the splined shaft, turn the tractor, and re-assemble on the splined shaft with its phasing mark at the same spline shaft groove as the phasing mark of the other tractor.

TRACTOR LID (TRACTOR FEED PRINTER)

Requirement: The upper paper guide shall contact the side plate of both right and left tractors.

To Adjust: Loosen tractor side plate upper mounting screws friction tight. Position left-hand tractor side plate approximately in the center of its adjustment range and tighten its mounting screws. Position right-hand tractor side plate to meet the requirement. Tighten right-hand tractor mounting screw.

NOTE: Factory adjusted should not normally require adjustment unless tractors are removed or replaced.

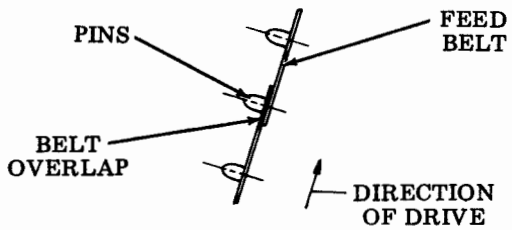

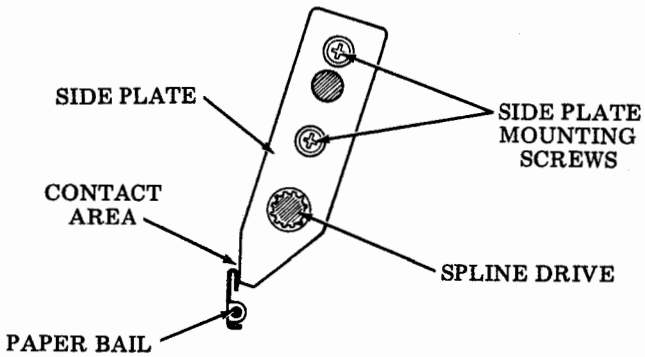

PAPER-OUT SWITCH (80-COLUMN TRACTOR FEED)

Requirement: With a 9/64 inch rod or 400136 lifter inserted in the loop of the paper-out spring, the paper-out switch should operate when the loop is pressed toward the paper guide and should operate in the other direction when the spring is allowed to return. Determine by ear (clicking noise) or by placing the leads of an ohmmeter across pin 11 of connector J-3 and pin 10 of connector J3. The ohmmeter should give a closed circuit reading before pressing the spring down, and open after releasing.

Adjustment: With clamp screw friction tight, position the switch to meet the requirement, using the pry points. Tighten clamp screw.

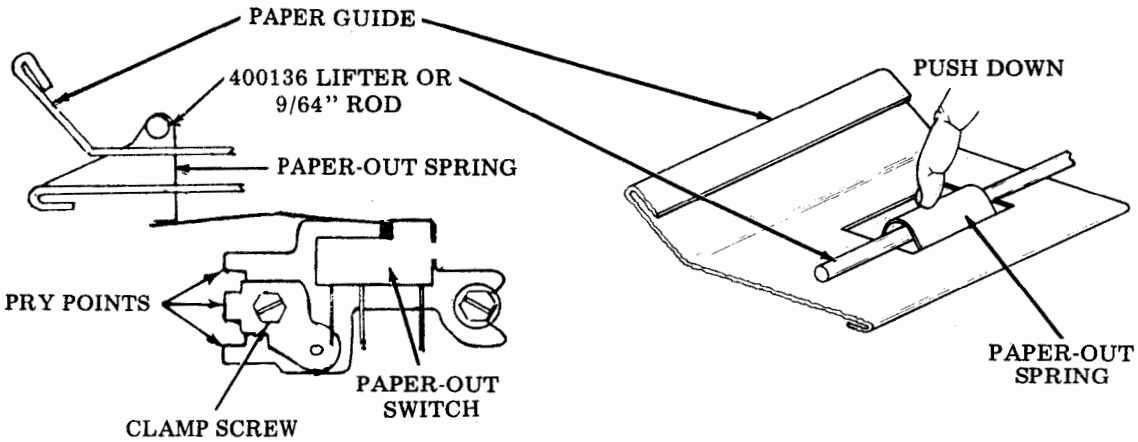

LOW PAPER SWITCH (80-COLUMN FRICTION FEED) -- UNDER POWER

Requirement: The switch adjusting plate should be positioned in the center of the adjusting range. This position will give a low paper indication with approximately 3/16 inch to 1/4 inch of paper remaining on the roll. Remove the cover to provide access to the low paper switch.

To Check: Remove paper spindle. Place a roll of paper which has between 3/16 inch and 1/4 inch of paper remaining on the roll. Plug in ac power cord. The low paper lamp shall light.

To Adjust: Loosen mounting screws that secure switch adjusting plate, friction tight. Position plate to meet requirement. Tighten mounting screws.

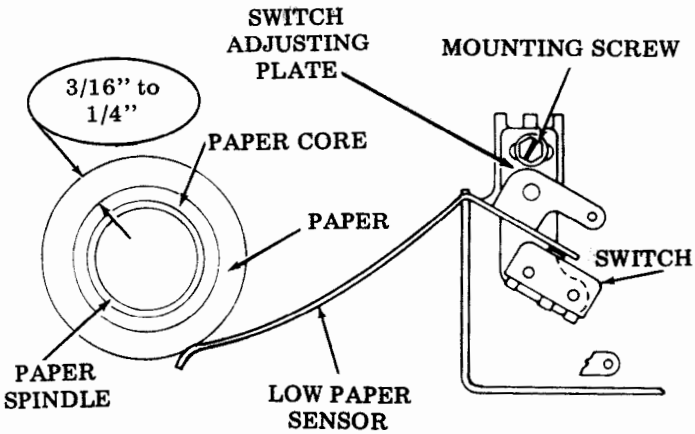

D. PRINTERS (Cont)

4. FRONT AND TOP ASSEMBLIES (Cont)

PAPER-OUT SWITCH (132-COLUMN PRINTER)

Requirement: The paper-out switch shall trip when the paper-out switch arm is positioned 0.075 inch to 0.095 inch from rear paper guide.

To Measure: Place a gauge between end of the paper-out switch arm and rear paper guide. The switch should trip before the arm contacts the 0.075 gauge and should not trip when lightly held against a 0.095 gauge.

To Adjust: Loosen the two switch clamp screws friction tight. Position switch about its pivot point to meet the requirement. Tighten clamp screws.

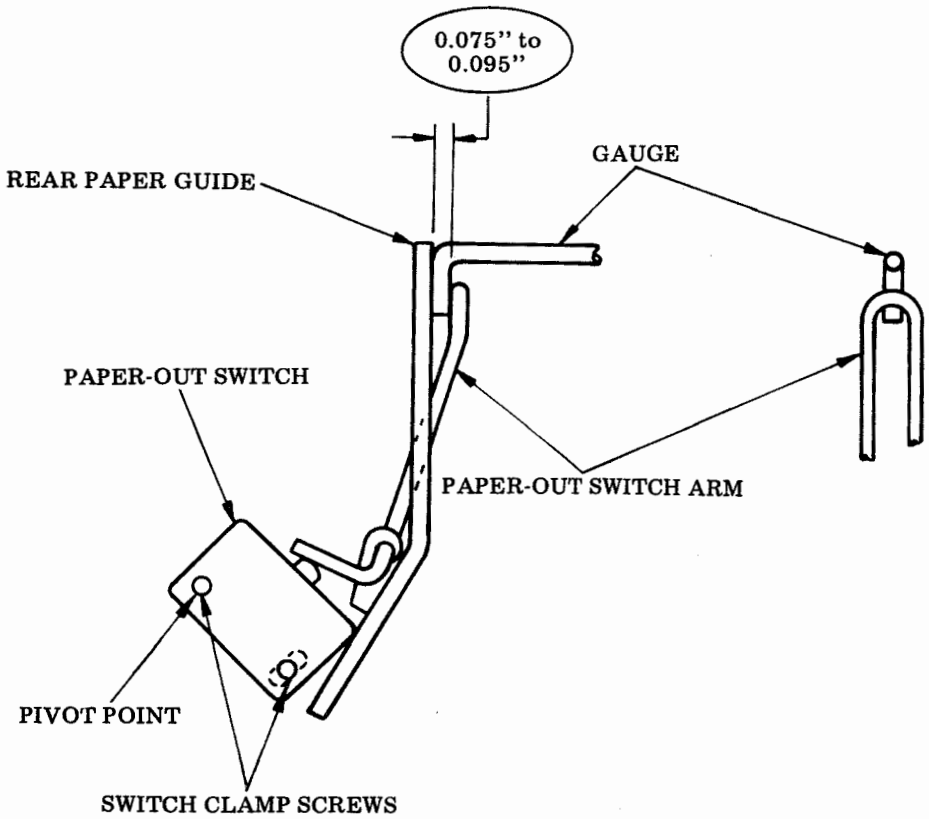

TYPE CARRIER PALLET ALIGNMENT

Requirement: The pallet location in the carrier shall be:
80-Column -- 0.070 inch
132-Column -- 0.125 inch
from the stem end to the rear surface of the carrier.

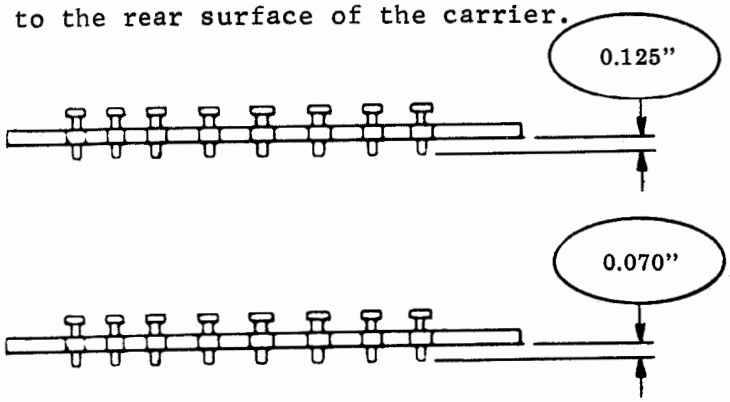

To Adjust: Move all pallets from position 1 to position 2.

POSITION 1

POSITION 2

Place type carrier into proper slot on the 402878 gauge. Seat all pallets into bottom of channel.

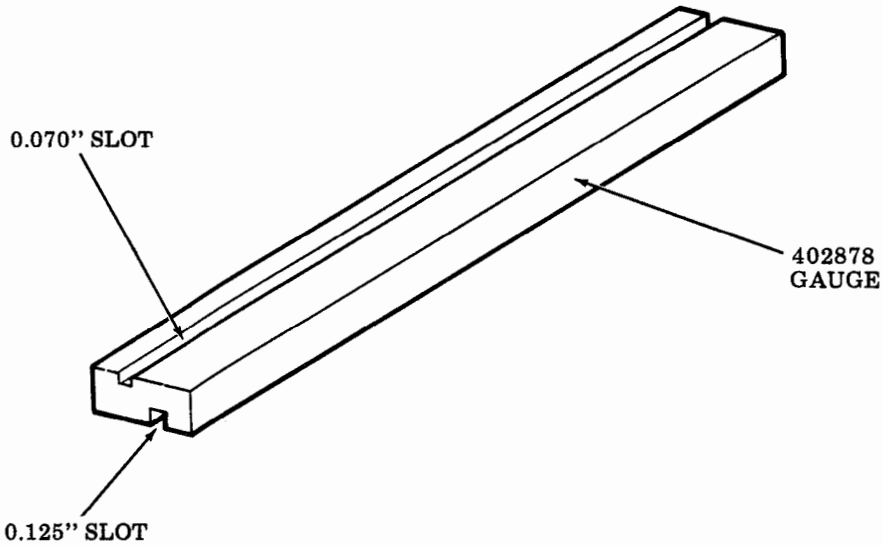

D. PRINTERS (Cont)

4. FRONT AND TOP ASSEMBLIES (Cont)

POWER SUPPLY VOLTAGE

Requirement: Voltage reading shall be -25 V dc ±0.5 volt.

80-Column Friction or Tractor Feed Printers:

To Check: With the ac power cord and interlock strapping plug connected, measure the voltage between frame on the printer and terminals 9 or 12 on J3 connector (410640 circuit card removed).

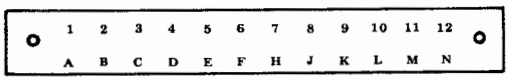

J3

(Left Side View of Friction Feed Printer)

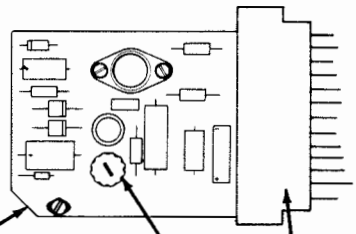

410681 (Early Design) OR 410150 (Late Design)

R4 RESISTOR

J111

(Rear View of Tractor Feed Printer)

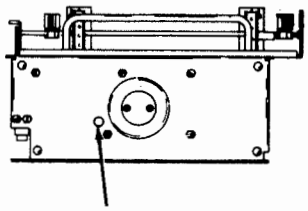

R4 RESISTOR (Accessible Through Hole in Rear Plate of Power Module)

132-Column Tractor Feed Printers:

To Check: With the ac power cord and interlock strapping plug connected, measure the voltage between terminals 1 and 2 or terminals 1 and 3 on P103 connector (410729 circuit card removed).

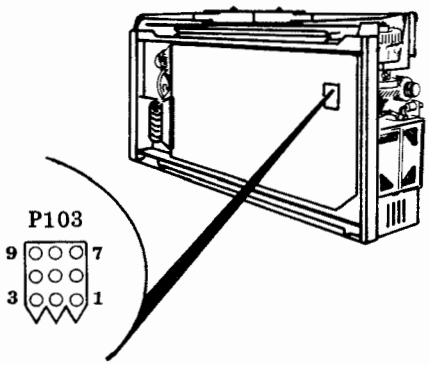

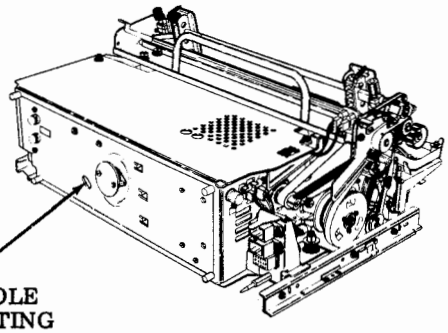

ACCESS HOLE FOR ADJUSTING R9 ON 410151 CARD

To Adjust: If the voltage is outside the required limits, adjust R9 resistor on the 410151.

E. OPERATOR CONSOLE

The clearance between the cover and keytop is the only adjustment provided on the KD-KDP opcon. Normally, readjustment is not necessary unless the cover is replaced or if there is an interference between keytop and the cover.

COVER-TO-KEYTOP

Requirement: Gap, approximately equal in 4 places shown.

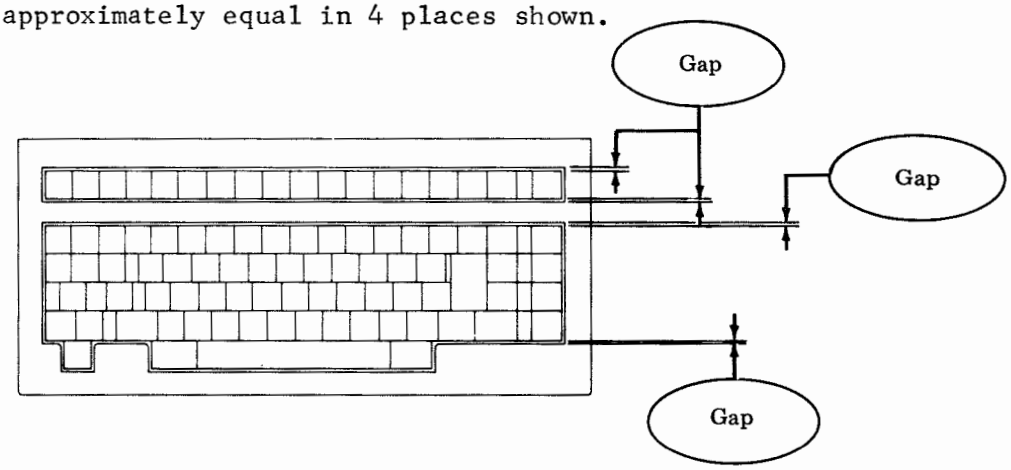

To Adjust: Remove the cover. (See PART 7 -- COMPONENT ACCESS, Operator Console.) Loosen two mounting screws friction tight on both sides of console.

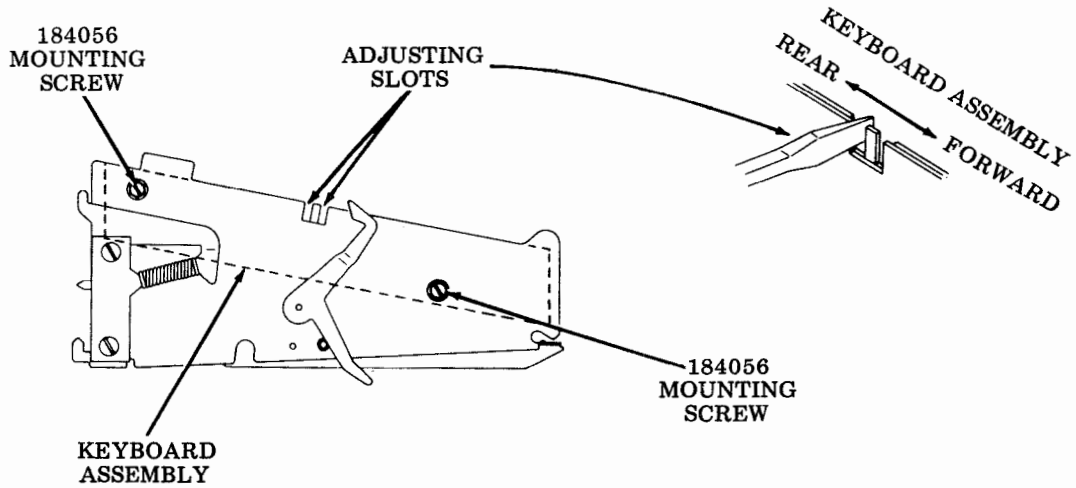

Insert screwdriver blade into adjusting slot and move keyboard assembly forward or to the rear to gain "Gap" clearance.
Tighten screws, replace cover and check gaps.

NOTE: If gaps required are not approximately equal after reassembly, remove cover and repeat adjustment procedures.

PART 7 — COMPONENT ACCESS

INDEX

PAGE

A. KD AND KDP
1. MONITOR REMOVAL 3
2. OPERATOR CONSOLE REMOVAL 3
3. ELECTRONICS PACKAGE REMOVAL 4
4. WIRED FRAME REMOVAL 8
5. CIRCUIT CARD REMOVAL 11
6. PRINTER REMOVAL 16

B. ROP
1. PRINTER REMOVAL 19
2. ROP OPCON REMOVAL 20
3. ROP ELECTRONICS REMOVAL 21
4. 9140 STATION CONTROLLER REMOVAL 22

C. DISPLAY MONITOR (40MN101/AA)
1. DISASSEMBLY INFORMATION FOR THE MODEL 40 DISPLAY MONITOR 23
2. SUBASSEMBLY IDENTIFICATION 23
3. DISASSEMBLY PROCEDURES 25

D. POWER SUPPLY (40PSU101/AA)
1. DISASSEMBLY PROCEDURES 39
2. SPECIAL ASSEMBLY INSTRUCTIONS 44

E. OPERATOR CONSOLES
1. KEYTOP CONVERSIONS FOR KD-KDP OPCONS 47
2. KEYTOP CONVERSIONS FOR RO OPCONS 48
3. SUBASSEMBLY IDENTIFICATION — KD-KDP OPCON (40K101/CAK) 49
4. DISASSEMBLY PROCEDURES — KD-KDP OPCON (40K101/CAK) 50
5. KEYSWITCH AND KEYTOP IDENTIFICATION — KD-KDP OPCON 55
6. SUBASSEMBLY IDENTIFICATION — RO OPCON (40K001/AAA) 57
7. DISASSEMBLY PROCEDURES — RO OPCON 57
8. KEYSWITCH AND KEYTOP IDENTIFICATION — RO OPCON 59

F. RO CONTROLLER (40C103/AD OR 40C103/AE) 60

G. PRINTER
1. FRICTION FEED 62
2. TRACTOR FEED 79

H. CABINETS AND PEDESTALS
1. CABINET PARTS REMOVAL 90
2. PEDESTAL PARTS REMOVAL 99
3. PAPER WINDER REMOVAL 102
4. ROP CONTROLLER INTERFACE CABLE ASSEMBLIES 102

PART 7 — COMPONENT ACCESS

TEST SWITCHES AND INDICATORS

NOTE: The operation of test switches and use of indicators should be done under the direction of the Troubleshooting section of this manual.

Tractor Feed Printer

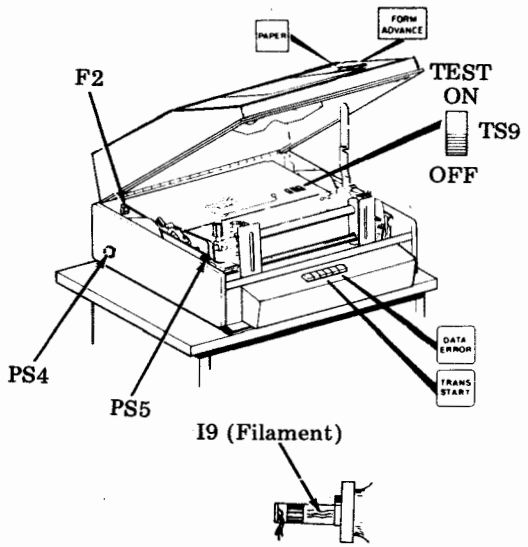

Friction Feed Printer

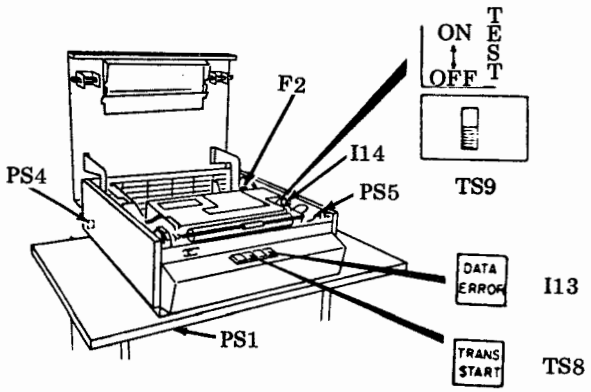

CAUTION: AVOID PLACING FINGERS BETWEEN CARDS WHEN DEPRESSING TS1-TS6.

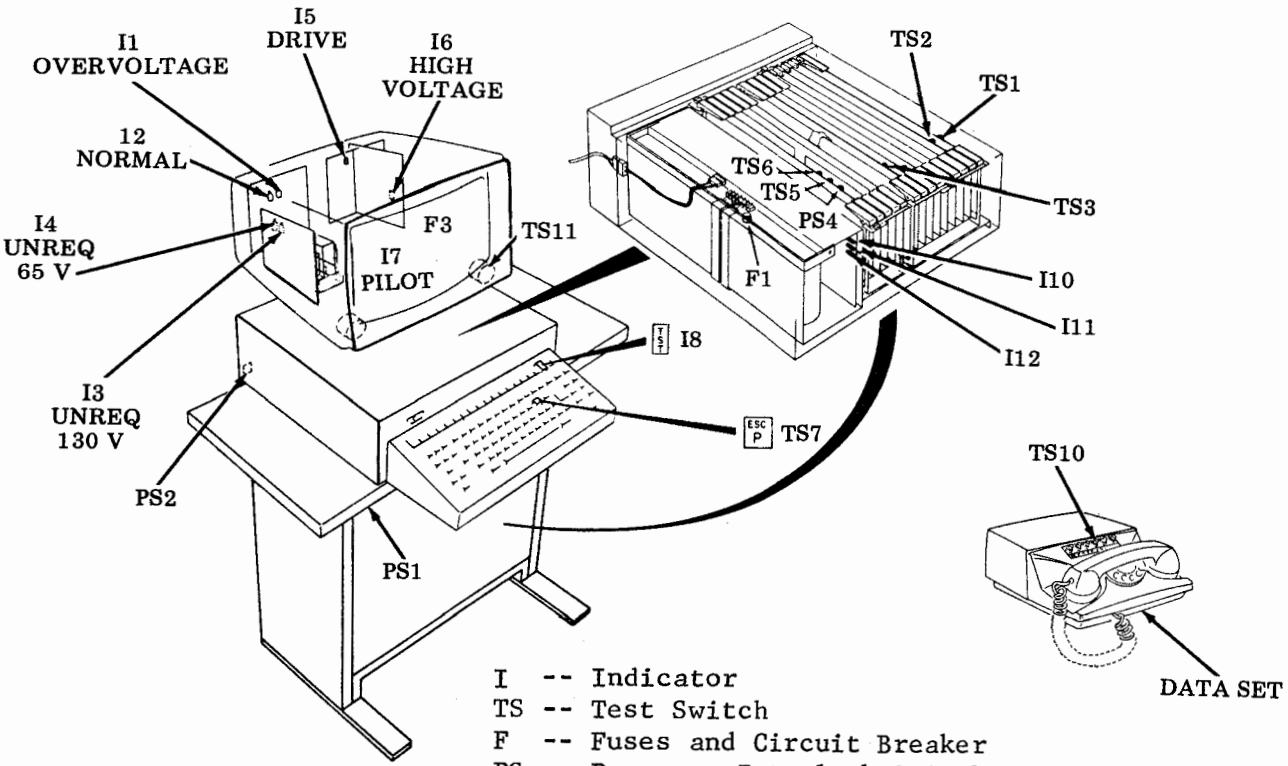

I -- Indicator
TS -- Test Switch
F -- Fuses and Circuit Breaker
PS -- Power or Interlock Switch

A. KD AND KDP

CAUTION: REMOVE ALL POWER FROM THE SET BEFORE PERFORMING ANY COMPONENT REPLACEMENT OR CONVERSIONS. THIS DOES NOT APPLY TO COVER REMOVAL FOR ACCESS TO TEST SWITCHES, OR TO POWER ON ADJUSTMENTS OF THE MONITOR.

1. MONITOR REMOVAL

① Removal of entire monitor unit from set:
Grasp monitor by sides near supports and simply lift up. Electrical cable connectors are part of support assembly.

② Removal of monitor housing:
Tilt monitor back and disengage latch.
Slide housing back partially.
Position monitor to its normal position making sure it locks in that position.
Remove housing completely.

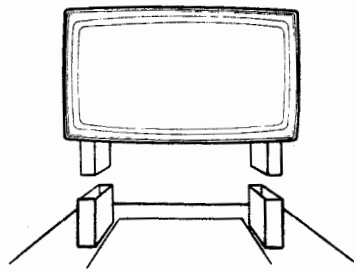

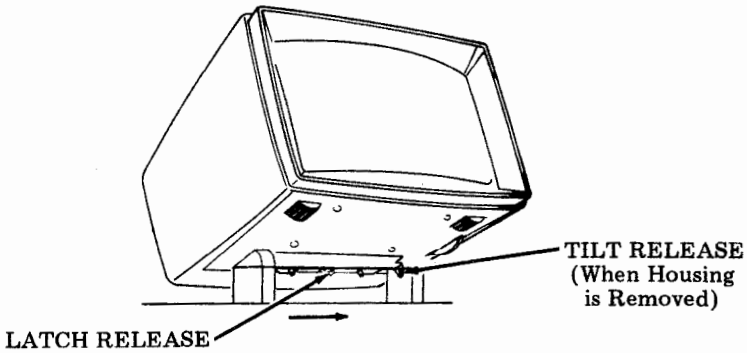

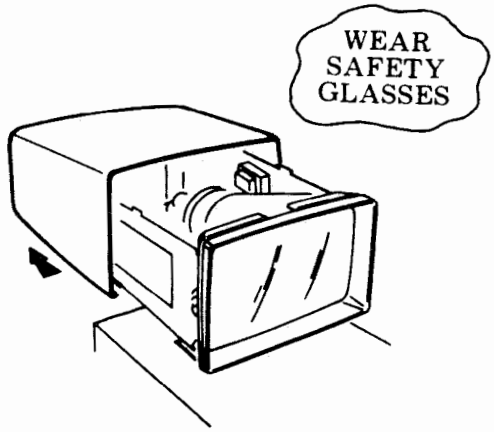

2. OPERATOR CONSOLE REMOVAL

① Place thumb on inward tab of console (both sides).
② Press downward into unlatched position (each side).
③ Remove console. (When replacing console, make sure locating pins are fully engaged before pushing latchlevers upward into locked position.)

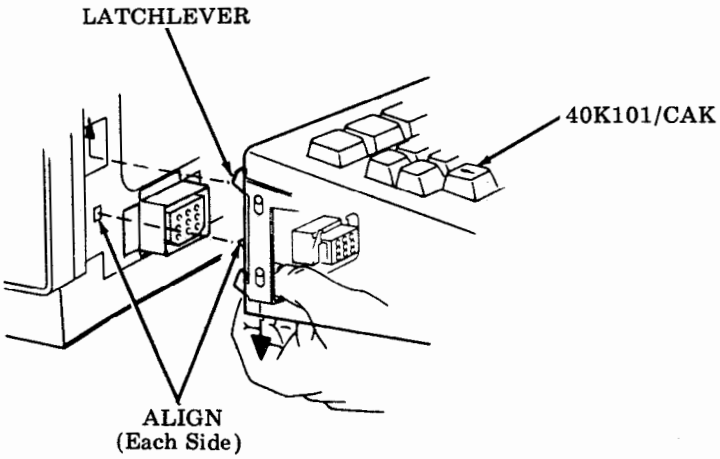

A. KD AND KDP (Cont)

3. ELECTRONICS PACKAGE REMOVAL

KD-KDP (Logic Under Monitor)

To remove cards or power supply:

① Open lid.
② Insert fingers as shown and lift then pull module forward.

NOTE: Do not attempt to lift at opcon (if present).

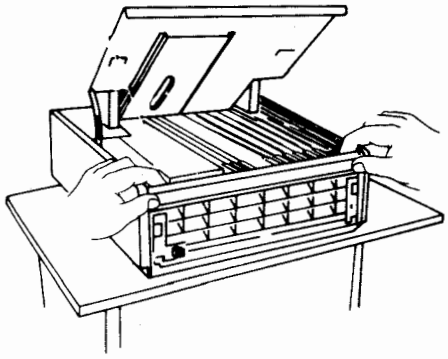

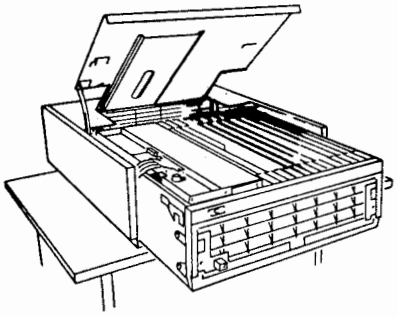

③ Move module forward until blocked by latch to provide sufficient clearance for card removal.

To remove circuit cards:

① Lift handle(s) carefully.
② Remove circuit card.

To remove and replace power supply:

① Disconnect ac power cord.
② Remove insulator.
③ Remove 5 screws. Remove cable and wires from terminal strip.
④ Loosen screw sufficient to raise and turn retaining bracket away from handle.

⑤ Use handle to lift out power supply.

⑥ Replace power supply making sure to seat on locating pins.

⑦ Replace wires and just start screws. Then slip in cable terminals and tighten screws.

⑧ Replace insulator and plug in ac power cord and reposition retainer bracket.

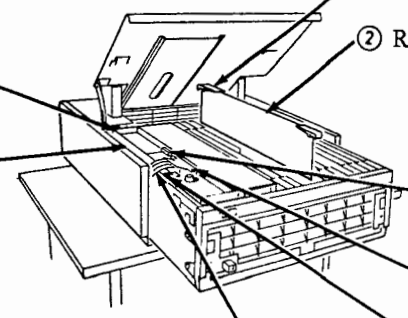

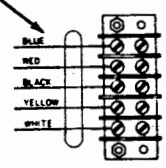

POWER SUPPLY RETAINER BRACKET

Early Design Only
④ Raise 401783 bracket enough to slide 341891 monitor cable underneath.

⑥ Release latch on right side of cabinet and slide module out of cabinet.

⑤ Remove *341891 monitor cable from grooves in fan assembly frame and display logic frame. Lower 401783 bracket and engage clip to side of module.

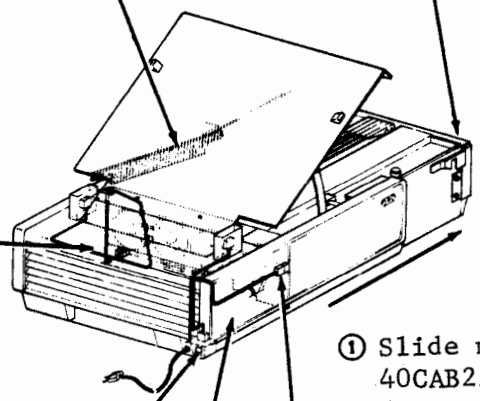

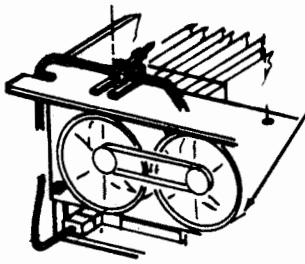

Belted Fan Assembly

① Slide module out of 40CAB251/AB cabinet far enough to engage latch on right side of cabinet.

*Supplied with cabinet

*400599
AC DISTRIBUTION ASSEMBLY

40CAB251/AB
LOGIC CABINET

② Reach in and disconnect *401633 ac power cable attached to back of fan assembly.

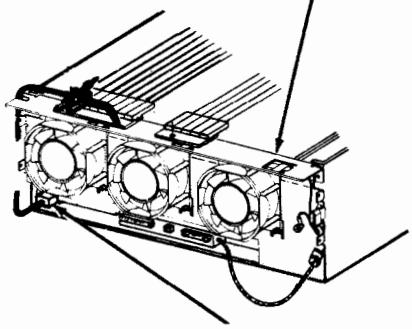

Receptacle for 341891 cable plug.

Beltless Fan Assembly

③ Loosen 341819 shoulder screw attached to fan assembly frame where the guide in the display logic aligns with tapped hole in fan assembly. Slide clip attached to 341891 cable out from under lip of display logic frame. Remove cable.

341819

DISPLAY LOGIC FRAME

341891 CABLE TO MONITOR

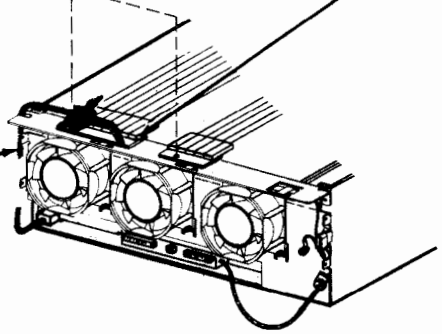

A. KD AND KDP (Cont)

3. ELECTRONICS PACKAGE REMOVAL (Cont)

KDP (Logic in Pedestal)

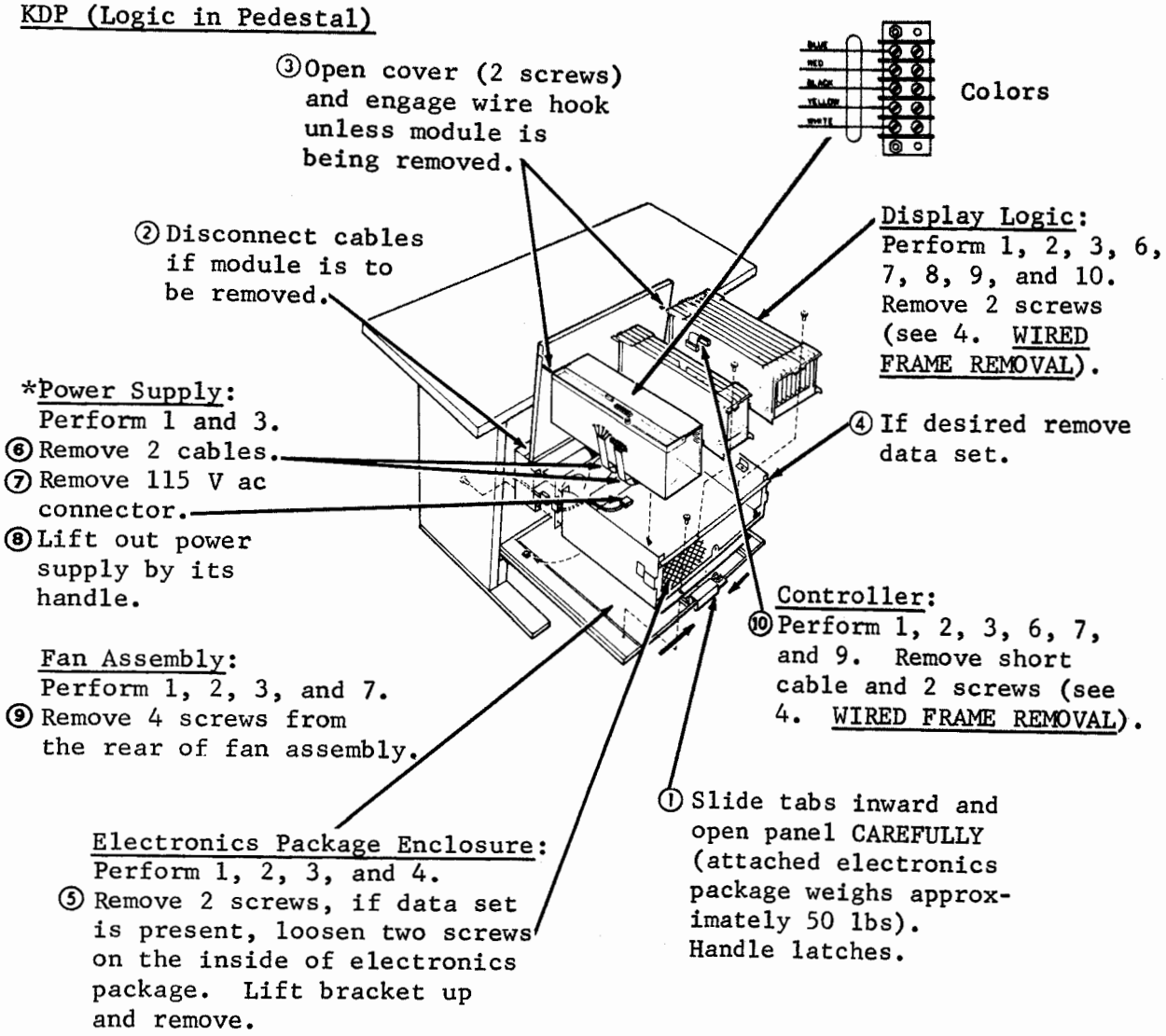

*To reinstall power supply, seat it on locating pins in the base of the enclosure. Cables are routed over handle.

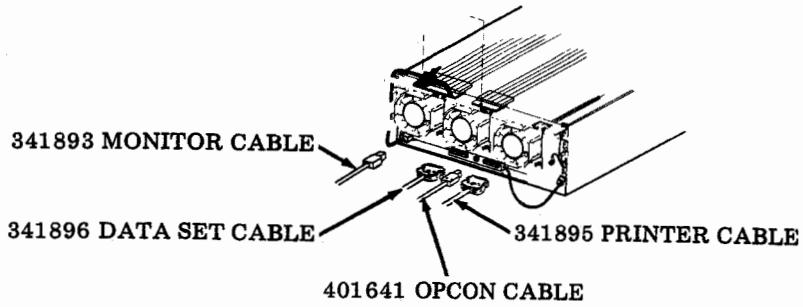

KDP (Logic in Adjacent Cabinet)

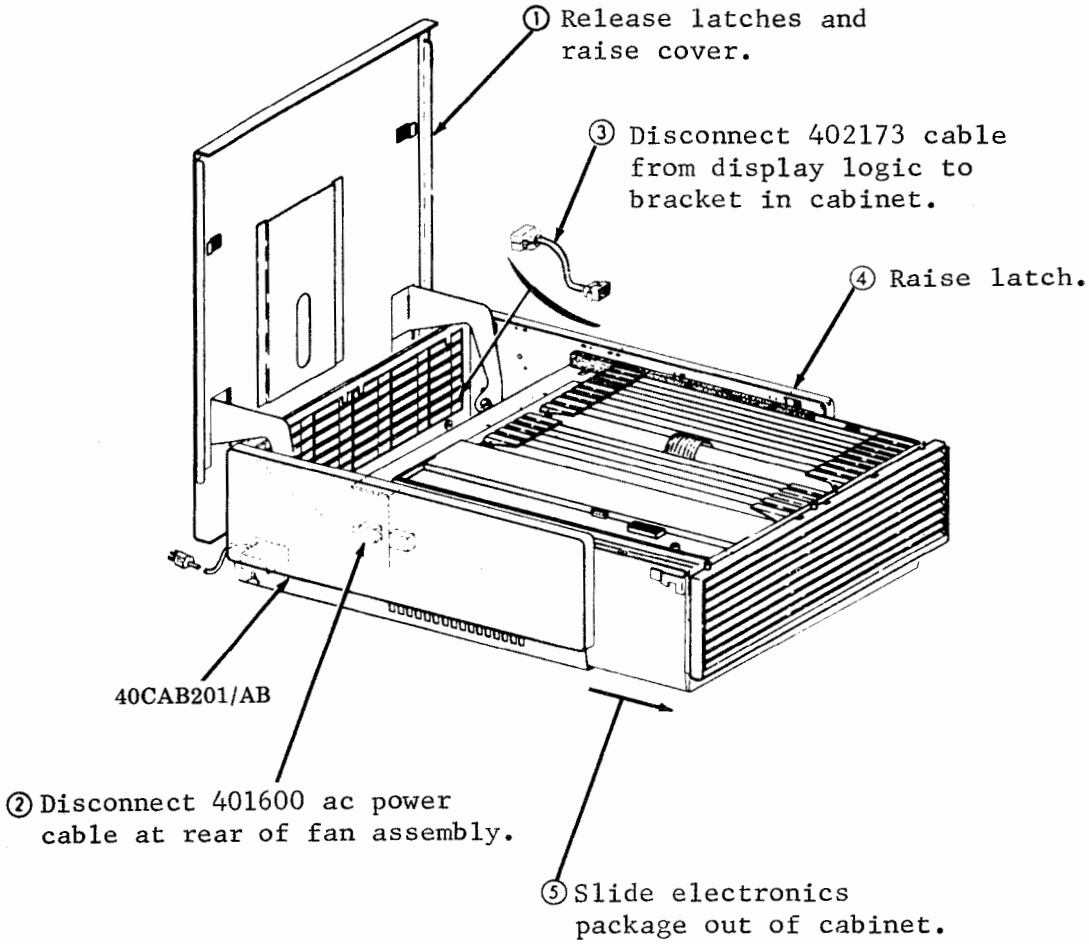

A. KD AND KDP (Cont)

4. WIRED FRAME REMOVAL

KD-KDP (Logic Under Monitor or Adjacent Logic)

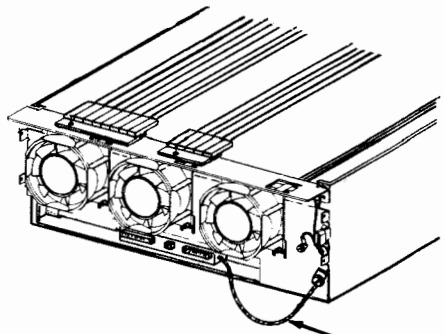

① Remove 341819 shoulder screws.

② Disconnect braided ground strap.

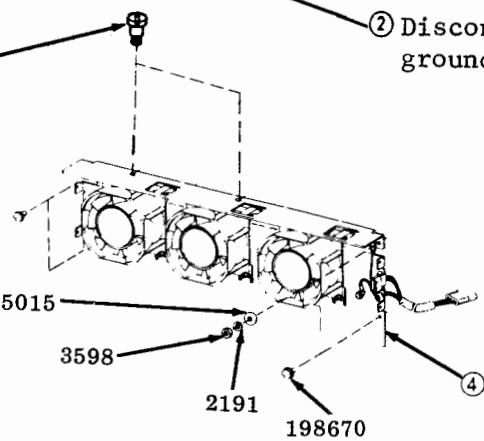

④ Remove fan assembly mounting hardware.

⑤ Remove power supply.

⑧ Lift up handle and remove power supply.

③ Disconnect ac plug.

⑦ Loosen rear insulator screw and swing insulator aside. Loosen terminal block screws.

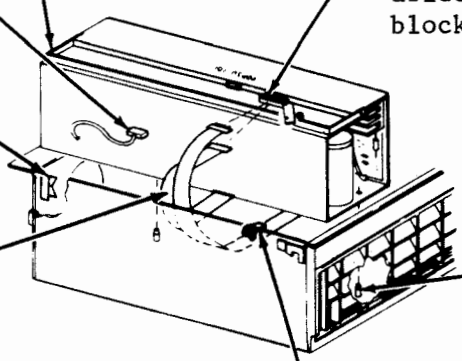

To replace power supply:

Place display logic cable on terminal strip (flat terminals) and then controller cable (formed terminals) on top, and tighten screws.

⑥ Loosen 401688 clamp screw and swing 401710 clamp aside.

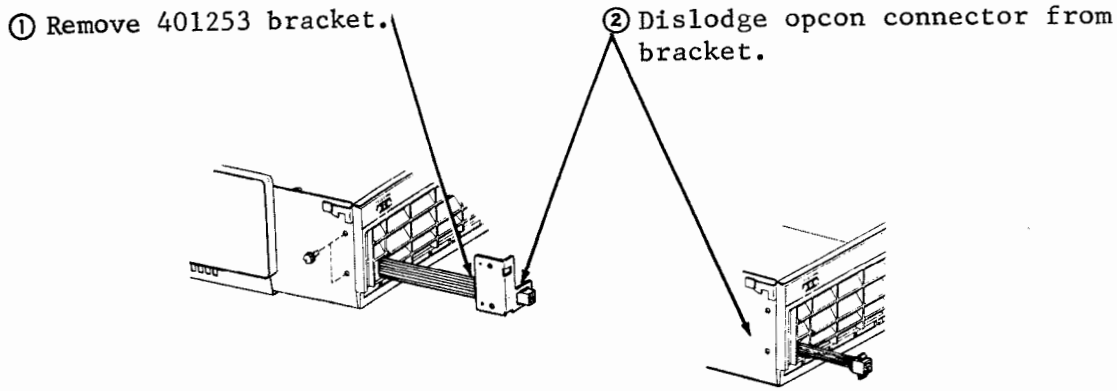
① Remove 401253 bracket.
② Dislodge opcon connector from bracket.

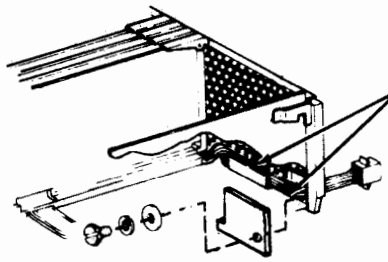
③ Remove 402166 cable protector (if present). Feed 341860 opcon cable carefully out of cable tray.

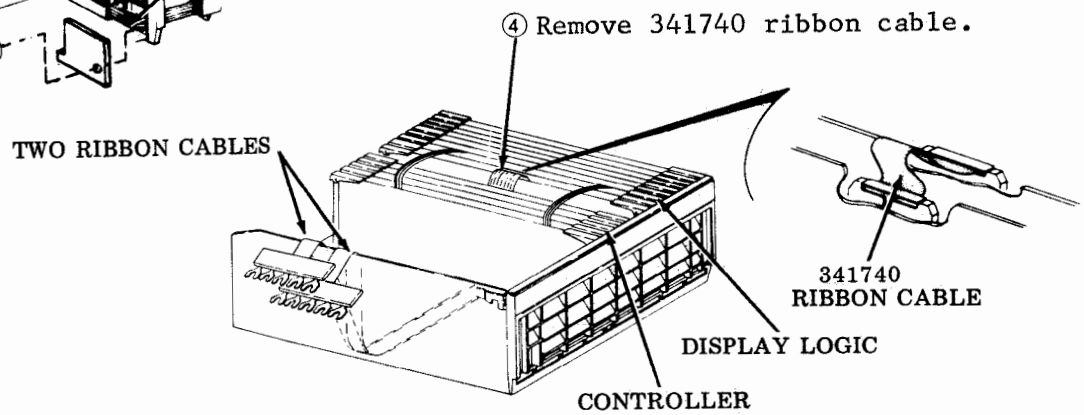
④ Remove 341740 ribbon cable.
TWO RIBBON CABLES
341740
RIBBON CABLE
DISPLAY LOGIC
CONTROLLER

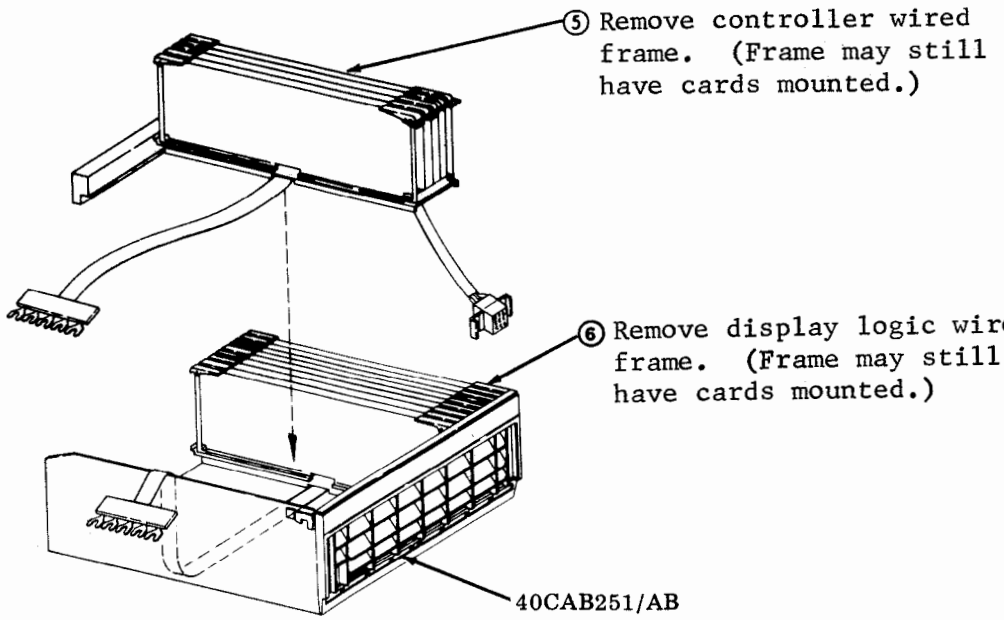
⑤ Remove controller wired frame. (Frame may still have cards mounted.)
⑥ Remove display logic wired frame. (Frame may still have cards mounted.)
40CAB251/AB

A. KD AND KDP (Cont)

4. WIRED FRAME REMOVAL (Cont)

KD-KDP (Logic in Pedestal)

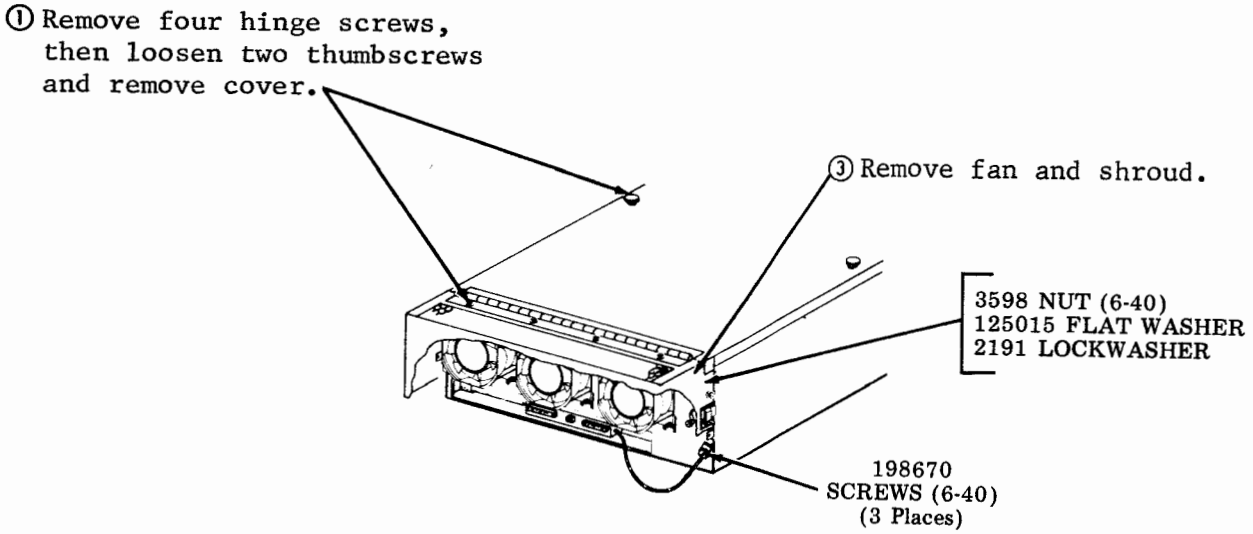

(Rear of Fan Assembly)

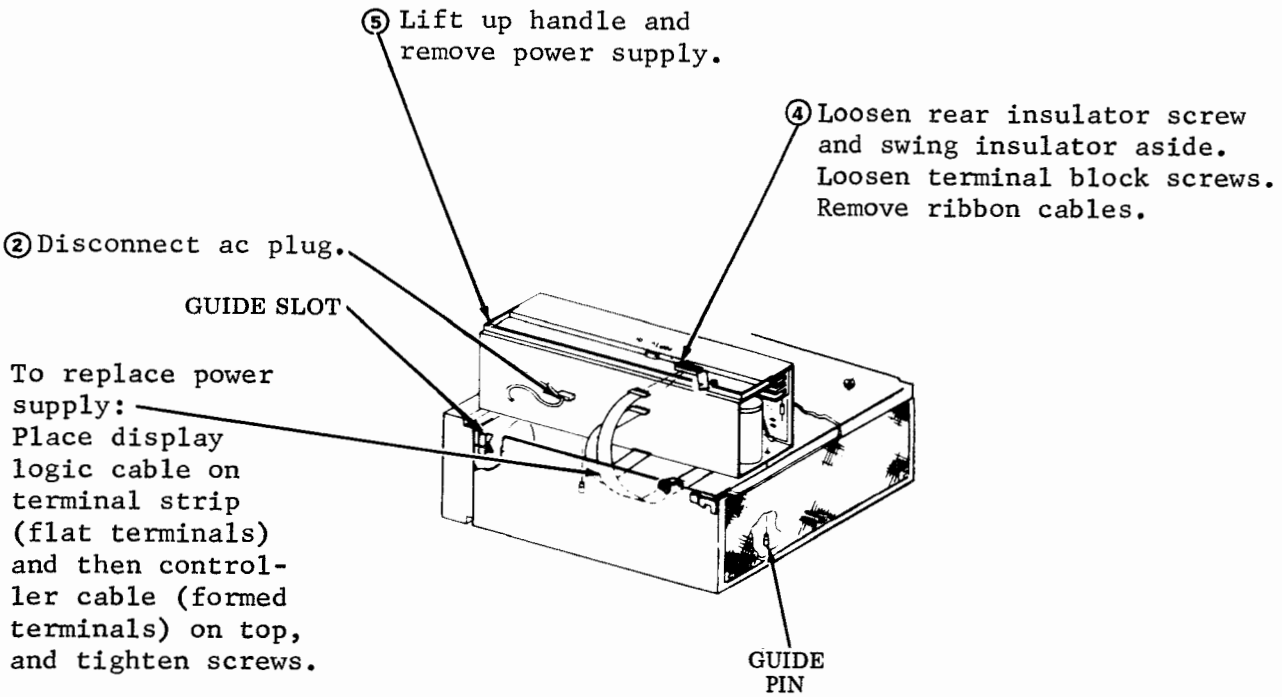

5. CIRCUIT CARD REMOVAL

If any field options are to be changed or checked for proper position, turn off power and remove cards using the following procedures.

The station feature and option record should be marked to show any options that differ from factory furnished (*) and should be filled in to indicate what features have been provided in the set or station.

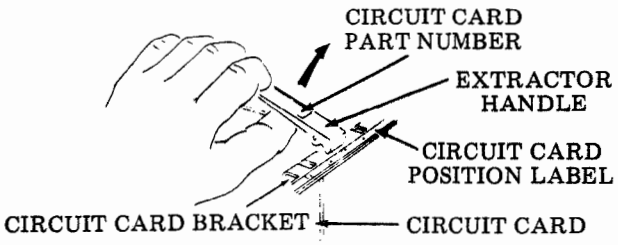

① Extracting circuit card.

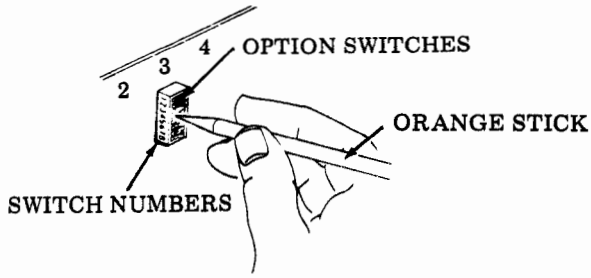

② Activating options.

Controller

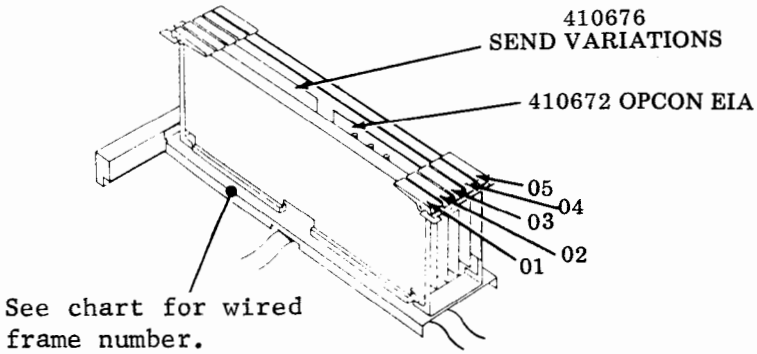

Position	40C102/AB	40C102/AC	40C202/BC	40C202/BD	40C202/BE	40C202/BF	40C202/BG See Note	40C204/BA	40C204/BB	Card Description
01				410670						S/R and Printer
						410770			410770	Printer Interface
02	410671	410671	410671	410671						EIA Interface
					410771	410771				Modified EIA Interface
								410679	410679	Full Duplex Interface
03	410672	410672	410672	410672	410672	410672	410672	410672	410672	Opcon Interface
			410676	410676	410676	410676	410676	410676	410676	Send Variations
04	410670									S/R and Printer
			410675	410675	410675	410675	410675	410675	410675	Message Control
05	410669	410669								Model 40 Control
			410674	410674	410674	410674	410674	410674	410674	Data Bus and Decode
Wired Frame	341907	341907	341909	341909	341909	341909	341909	402176	402176	

A. KD AND KDP (Cont)

5. CIRCUIT CARD REMOVAL (Cont)

Display Logic -- 40/1

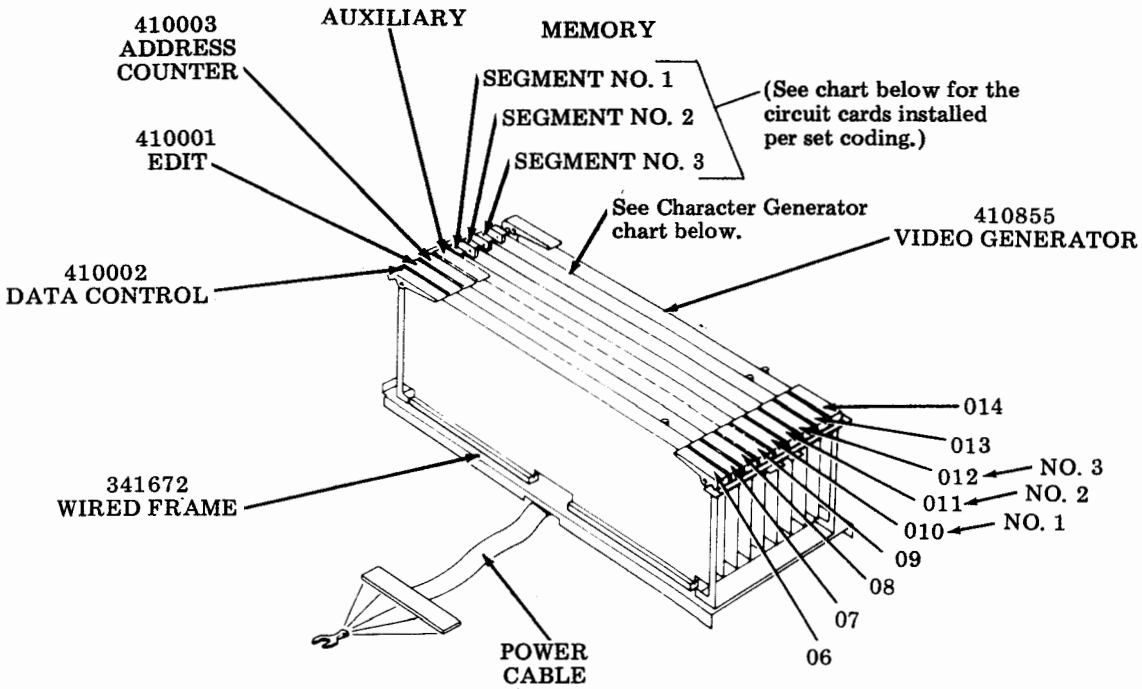

CHARACTER GENERATOR OPTIONS	
POSITION 013	DISPLAY TYPE
410657	Standard ASCII
410020	Line Drawing
410021	Fractions
410022	Weather

DISPLAY LOGIC ARRANGEMENTS (40DL291/ZZ)						
Memory Segment	Basic 24 Lines	Basic 48 Lines	Basic 72 Lines	Full Edit 24 Lines	Full Edit 48 Lines	Full Edit 72 Lines
No. 1	410004	410004	410004	410005	410005	410005
No. 2	None	410004	410004	None	410005	410005
No. 3	None	None	410004	None	None	410005
Basic Edit Controller (40C102)				Full Edit Controller (40C202)		

Display Logic -- 40/2

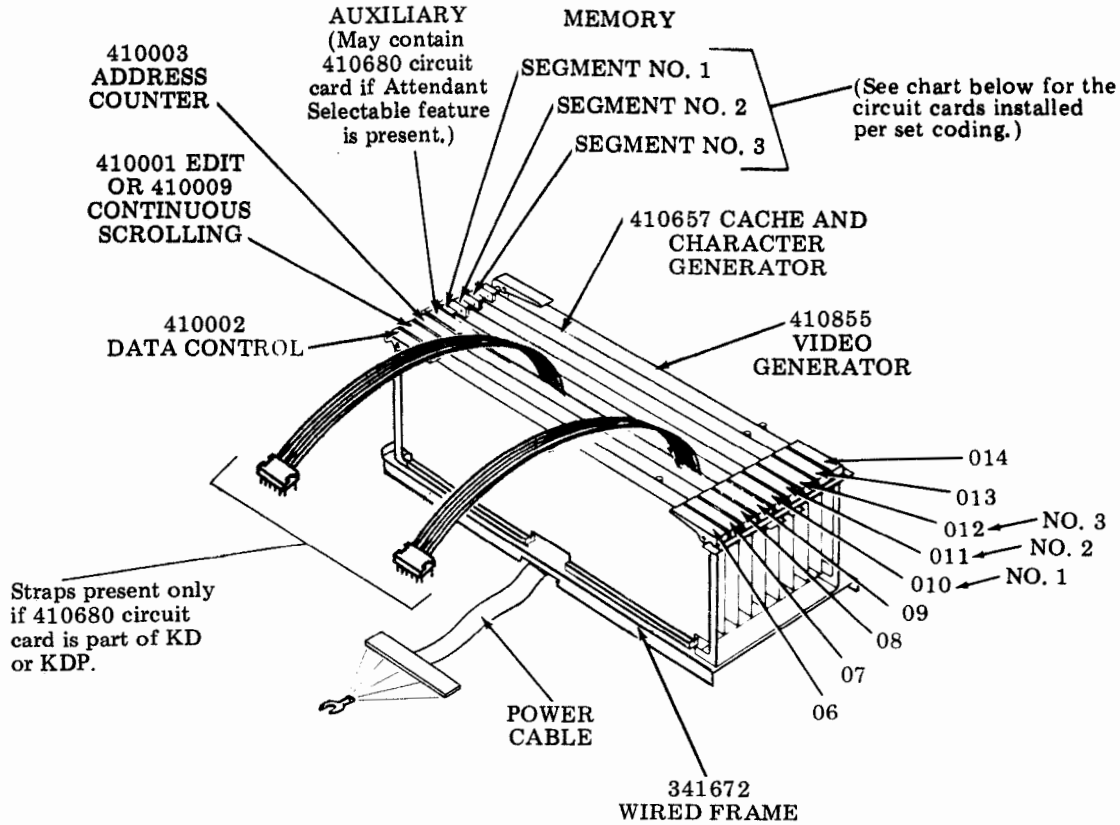

DISPLAY LOGIC ARRANGEMENTS (40DL291/ZZ)			
Memory Segment	Full Edit 24 Lines	Full Edit 48 Lines	Full Edit 72 Lines
No. 1	410005	410005	410005
No. 2	None	410005	410005
No. 3	None	None	410005
	Full Edit Controller 40C204/BA		

A. KD AND KDP (Cont)

5. CIRCUIT CARD REMOVAL (Cont)

Display Logic -- 40/3

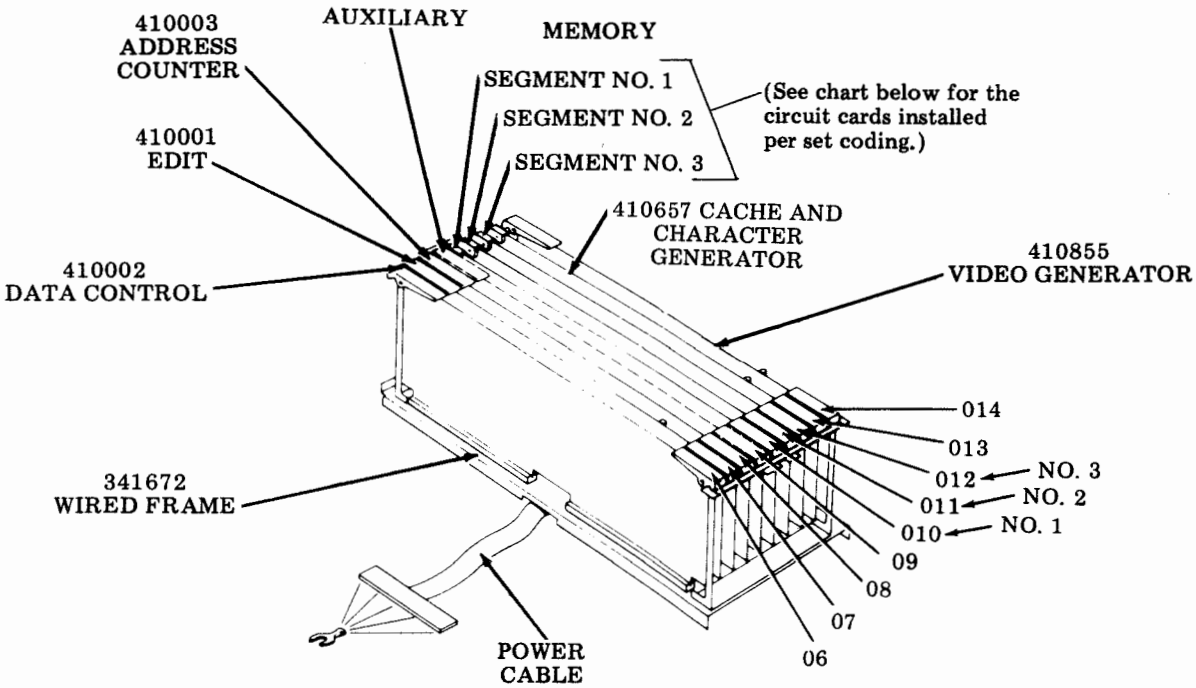

DISPLAY LOGIC ARRANGEMENTS (40DL291/ZZ)			
Memory Segment	Full Edit 24 Lines	Full Edit 48 Lines	Full Edit 72 Lines
No. 1	410005	410005	410005
No. 2	None	410005	410005
No. 3	None	None	410005
Full Edit Controller (40C202/BG)			

9140 Station Controller Card Arrangement

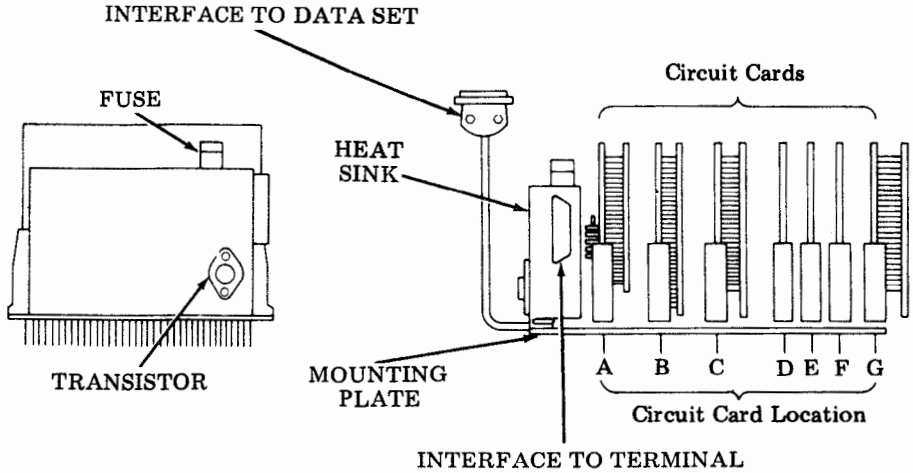

CIRCUIT CARDS	CIRCUIT CARD LOCATION	PART NO.	FUNCTION
A	A	322010	CDC Detector
**A-1	Mounted on Card A	322409	Third CDC Detector
A-3C or A-3E	Mounted on Card A	303805 or 303839	1050 Baud Timer 1200 Baud Timer
B	B	322011	R/T Distributor
B-1	Mounted on Card B	322411	Parity Error Detection
C2	C	322013	ROP Control Logic
C2-2	Mounted on Card C2	322442	A/B and Motor Control (Selected)
D1	D	322014	Send/Receive Logic
E2	E	322451	EIA Interface
F1	F	322017	Buffer
G3	G	322083	Channel Control Store and Forward
*MC641	Mounted on Card G3	322641	Alarm/Parity Error Response
R	Under Heat Sink	303808	Voltage Regulator

*Part of 345625 alarm modification kit which is optional. The other parts of 345625 modification kit are the 345626 alarm assembly and mounting hardware.

**322409 third CDC circuit card assembly which is optional.

A. KD AND KDP (Cont)

6. PRINTER REMOVAL

KDP (Adjacent Printer)

Friction Feed Printer

To remove and replace entire printer assembly:

NOTE: The circuit card can be removed after step 4 of disassembly. If printer is not being removed omit steps 2 and 3.

① Turn power off. Open cover.
② Disconnect the interlock cable (P106) connector.
③ Remove paper roll.

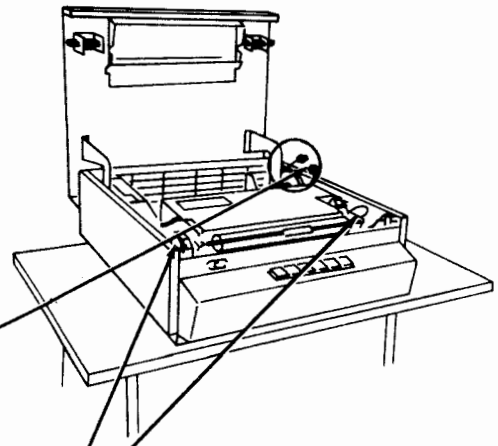

④ Release printer and raise to the tilt position by depressing the left and right release levers and lifting printer.

⑦ Release (push in) the printer slide detents and pull the printer out by grasping it by the frame (front bottom).

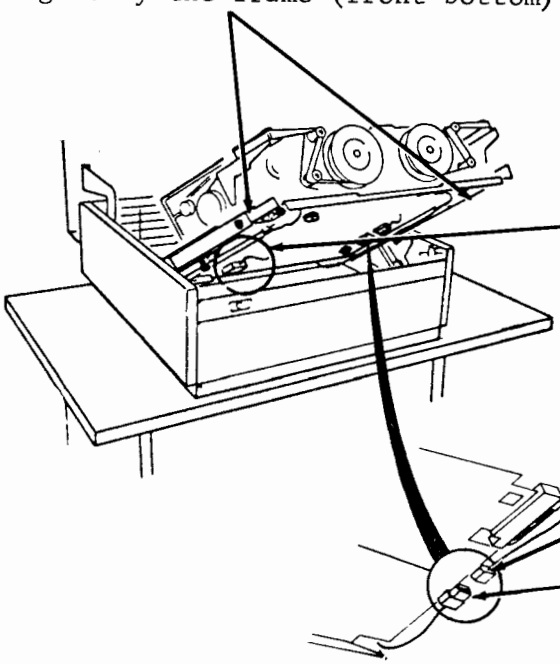

⑤ Disconnect the 115 V ac connector.

⑥ Disconnect SSI cable (P103) from printer cable.

Tractor Feed Printer -- 80- and 132-Column Printers (Printer shown is 80-Column.)

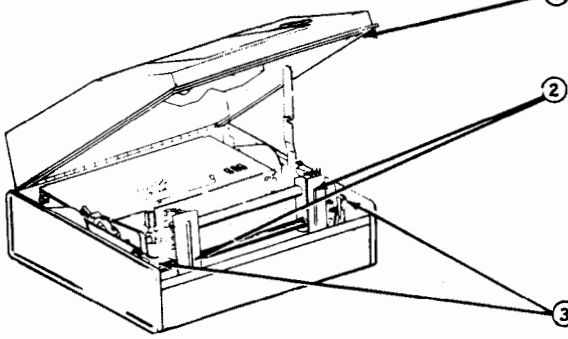

① Turn power off. Open cover.

② Remove paper by releasing paper guide and opening forms tractors.

③ Release printer to tilt position by pressing left and right latchlevers to rear.

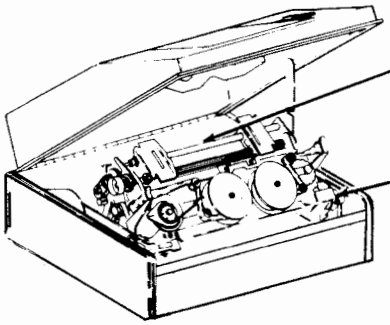

⑤ Pull printer forward by grasping handle at top, and slide off mounting tracks.

④ Insert screwdriver in right mounting track and pry up detent.

In reassembly make sure connectors at rear are fully connected.

A. KD AND KDP (Cont)

6. PRINTER REMOVAL (Cont)

KDP (Printer Under Monitor)

Friction Feed Printer

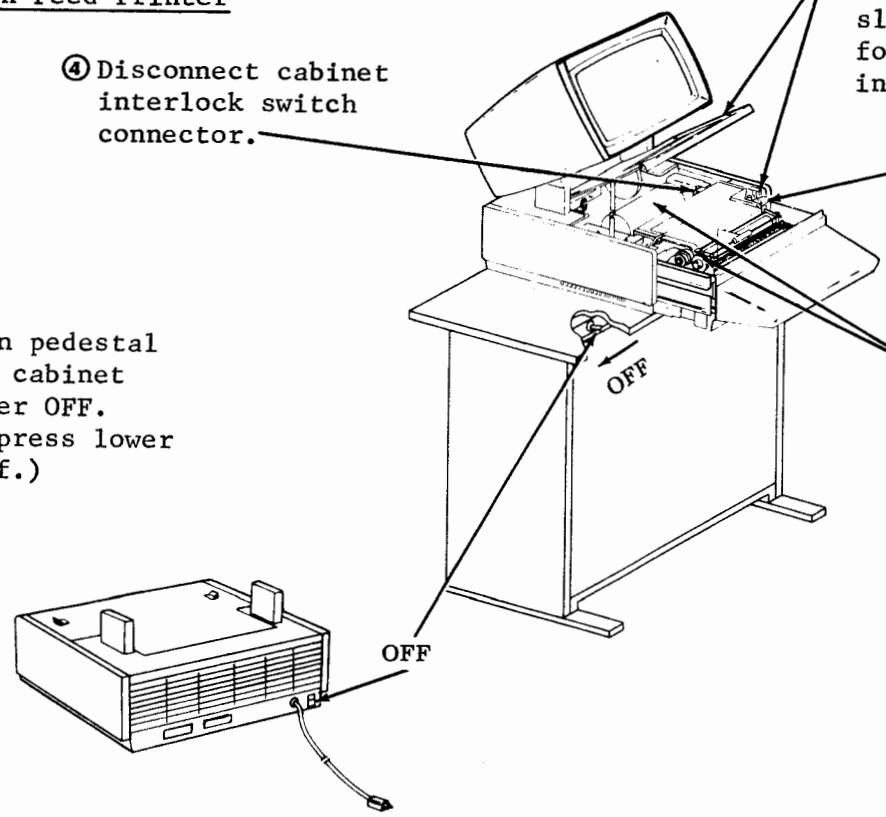

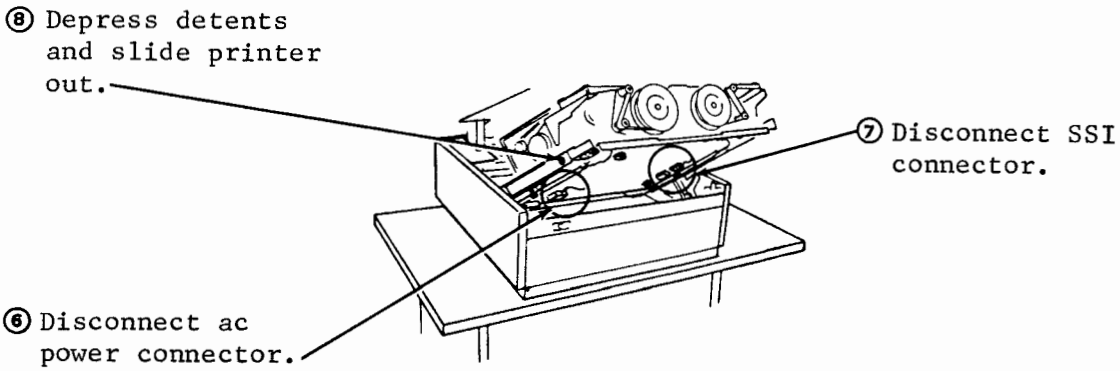

B. ROP

1. PRINTER REMOVAL

Removal and Replacement of Entire Printer Assembly

NOTE: The 410640 circuit card can be removed when printer is in maintenance position. If printer is not being removed omit steps 2 and 3.

① Open cover.

② Disconnect interlock cable connector P106.

③ Remove paper roll.

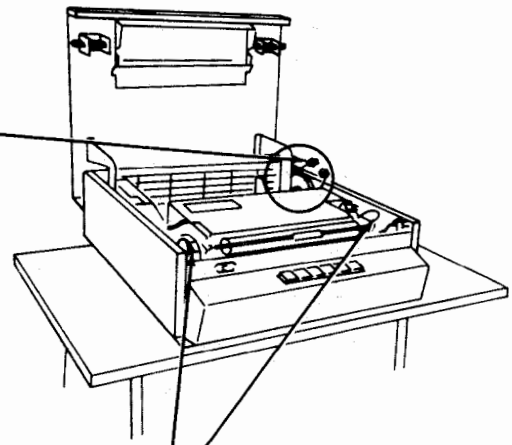

④ Release printer to tilt position by depressing left and right release levers.

⑦ Release (push in) printer slide detents and pull printer out by grasping it by the frame (front bottom).

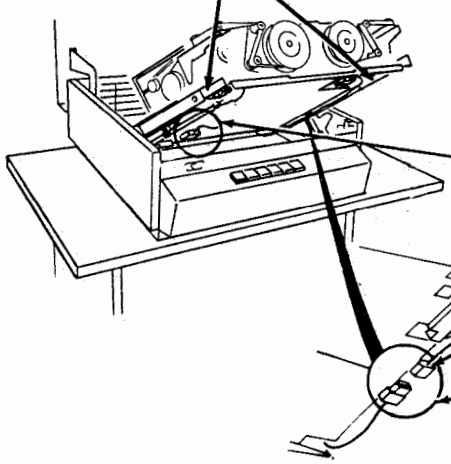

⑤ Disconnect 115 V ac connector J100.

P103

⑥ Disconnect SSI cable from printer cable.

⑧ Reverse the order to install printer.

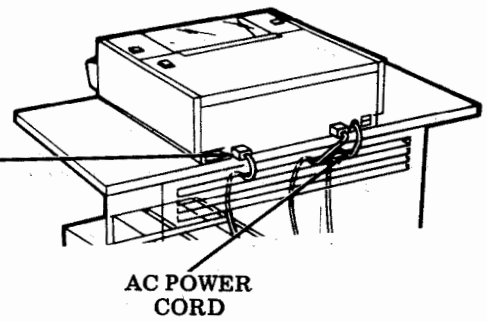

⑨ To remove printer cabinet from pedestal, disconnect two cables and withdraw ac power cord from pedestal after unplugging from convenience receptacle.

AC POWER CORD

B. ROP (Cont)

2. ROP OPCON REMOVAL

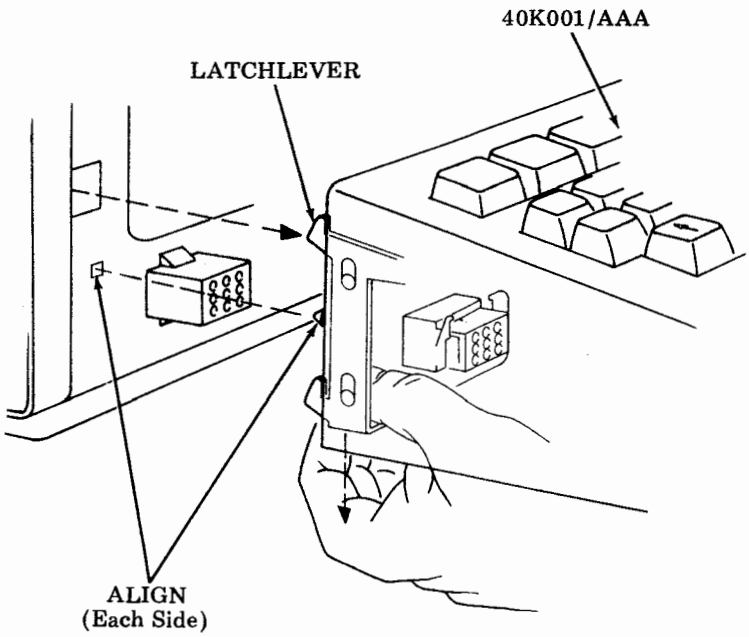

① Place thumb on inward tab of console (both sides).

② Press downward into unlatched position (each side).

③ Remove console. (When replacing console, make sure locating pins are fully engaged before pushing latchlevers upward into locked position.)

3. ROP ELECTRONICS PACKAGE REMOVAL

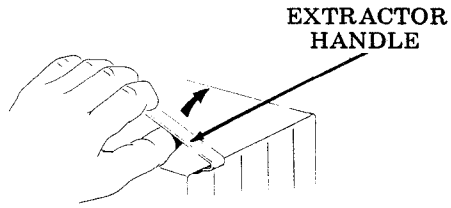

Extracting Circuit Card Book

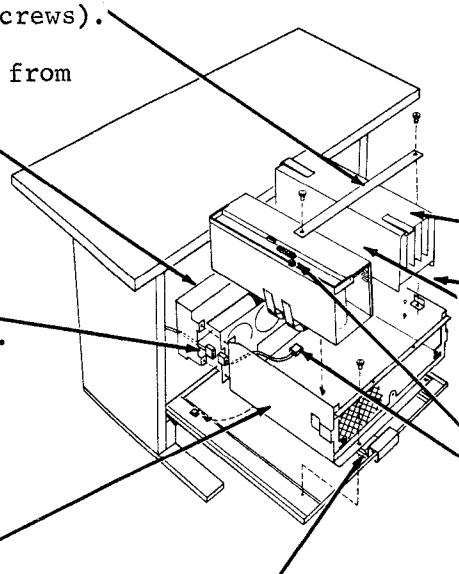

③ Remove retaining bar (two screws).

② Disconnect cables from fan assembly.

Controller:
Perform 1 and 3.
⑩ Lift extractor to remove.

④ Remove modem, if present.

Fan Assembly:
Perform 1, 2, and 7.
⑨ Remove four screws from rear of fan assembly.

Power Supply:
Perform 1 and 3.
⑥ Remove two cables.
⑦ Remove 115 V ac connector.
⑧ Lift out power supply by its handle.

Electronics Package Enclosure:
Perform 1, 2, and 4.
⑤ Remove two screws and slide enclosure forward to disengage it from tabs. Lift out.

① Slide tabs inward and open panel CAREFULLY. (Attached electronics package weighs approximately 50 pounds.) Handle latches.

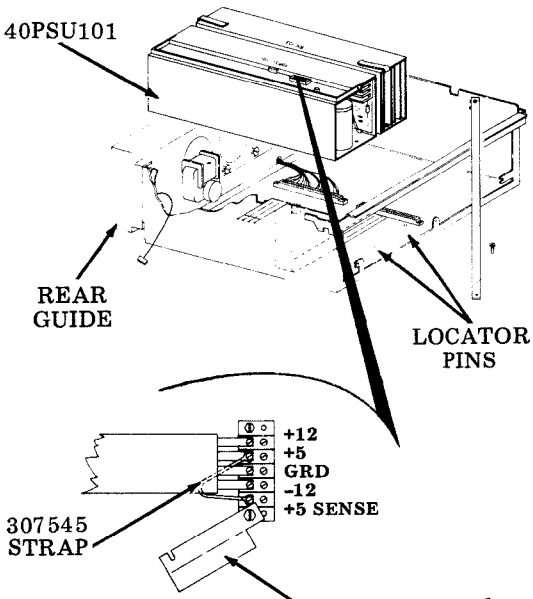

Loosen insulator screws and swing insulator aside. Disconnect cable from power supply.

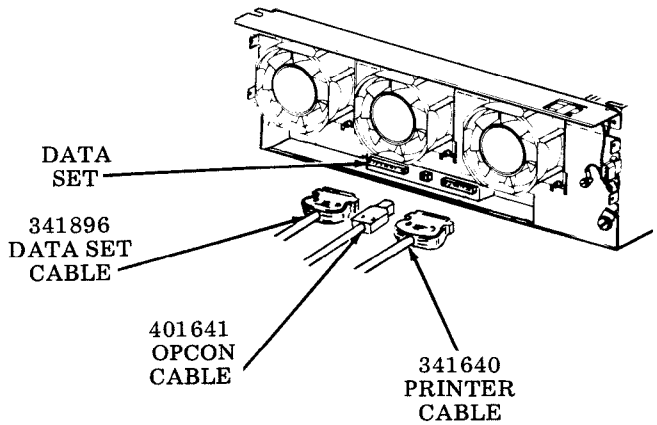

NOTE: To reinstall power supply, seat it on the locating pins in the base of the enclosure. The cables are routed over the handle.

B. ROP (Cont)

4. 9140 STATION CONTROLLER REMOVAL

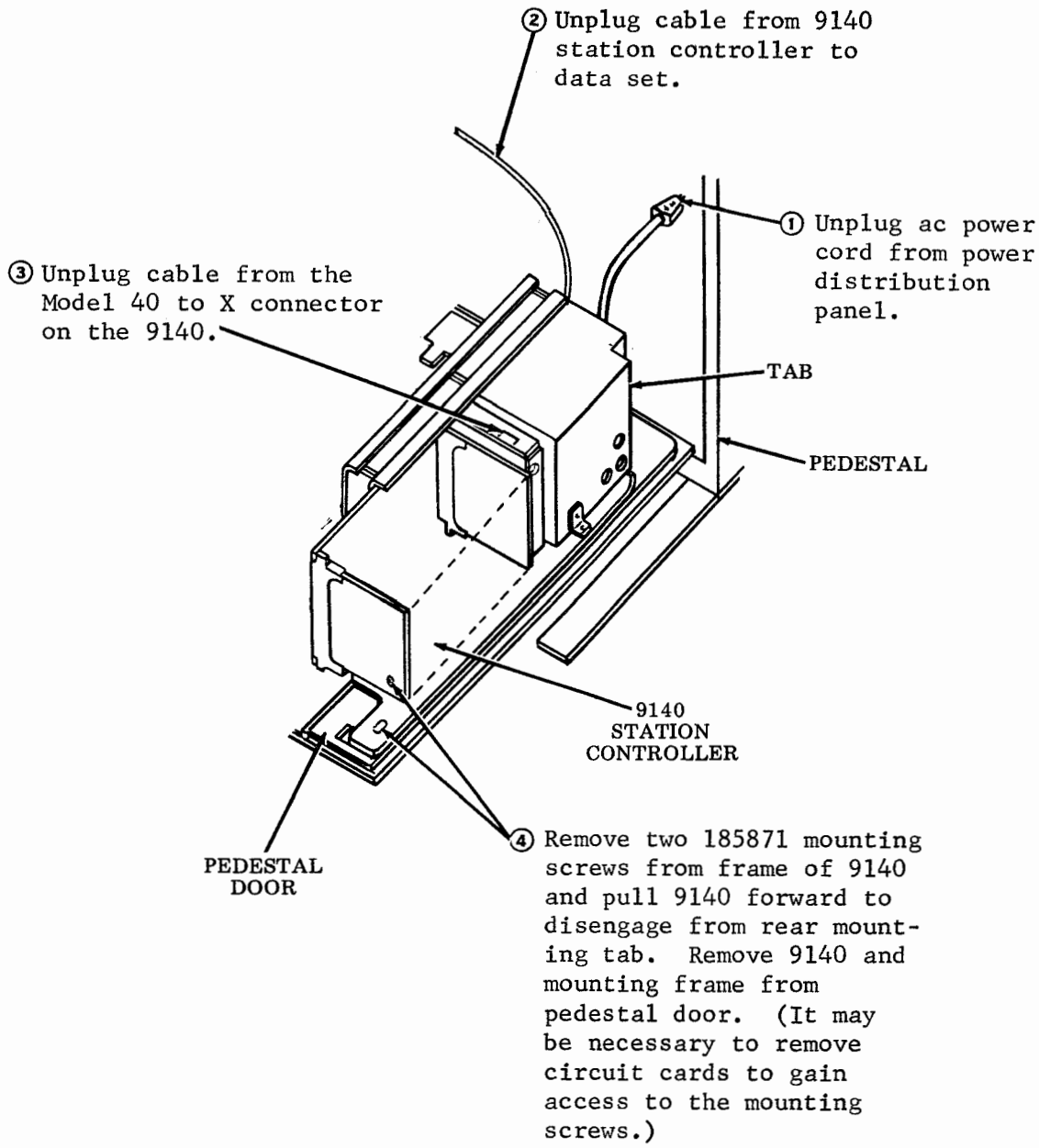

C. DISPLAY MONITOR (40MN101/AA)

1. DISASSEMBLY INFORMATION FOR THE MODEL 40 DISPLAY MONITOR

When removing a subassembly or part from the display monitor, follow the removal procedure and note the sequence of removal to enable proper reassembly. For reassembly, reverse the removal procedure except where different instructions are given.

For all disassembly or reassembly procedures or when disconnecting or reconnecting any of the electrical components of the display monitor, all power and video signals to the monitor shall be turned OFF to avoid safety hazards and prevent electrical component damage. A recommended safety practice is to unplug all ac input power cords.

CAUTION: WEAR APPROVED SAFETY GLASSES WHEN THE HOUSING OF THE MONITOR IS REMOVED, AS THE DISPLAY TUBE IS FRAGILE IN THE NECK AREA AND IS SUBJECT TO IMPLOSION IF BROKEN. BE CAREFUL NOT TO STRIKE THE GLASS OF THE TUBE WITH TOOLS OR COMPONENTS WHEN WORKING IN ITS VICINITY.

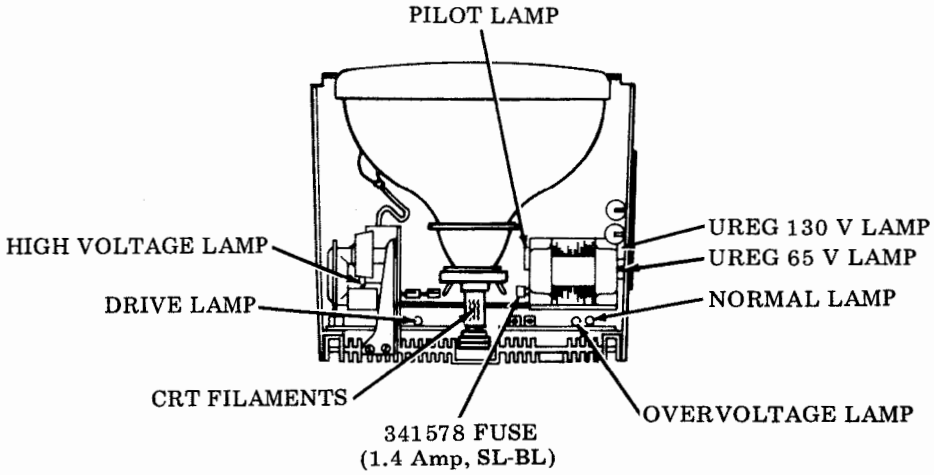

2. SUBASSEMBLY IDENTIFICATION

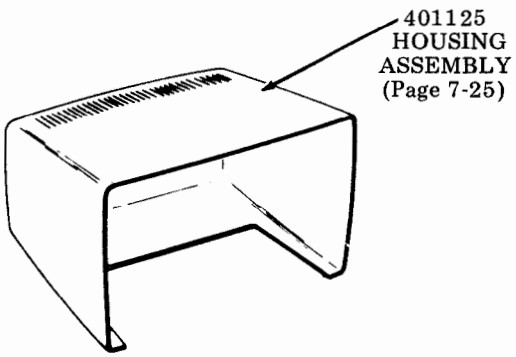

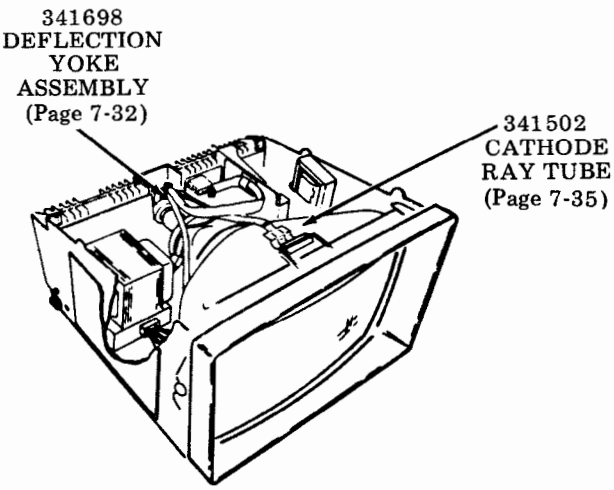

C. DISPLAY MONITOR (40MN101/AA) (Cont)

2. SUBASSEMBLY IDENTIFICATION (Cont)

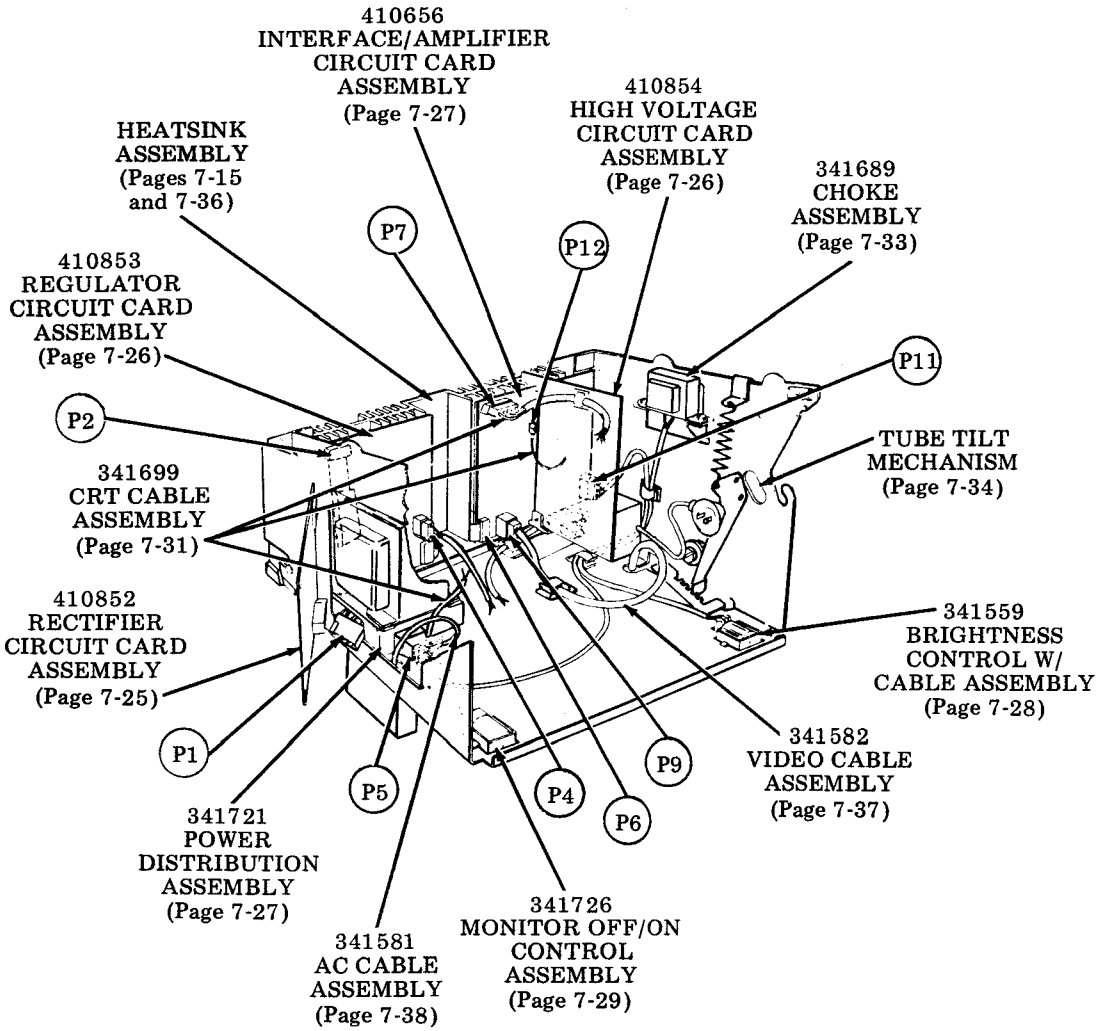

3. DISASSEMBLY PROCEDURES

401125 Housing Assembly

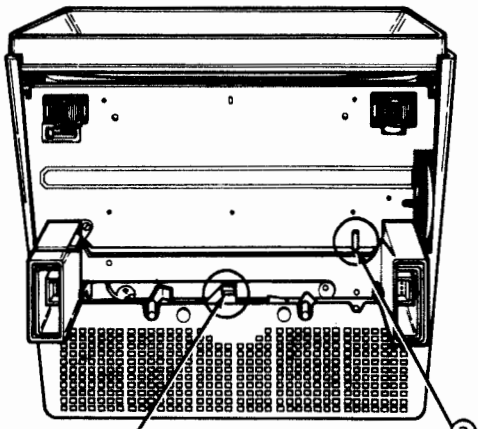

① Release latch.

③ Tilt Release -- Prevents monitor from tilting back when housing is removed.

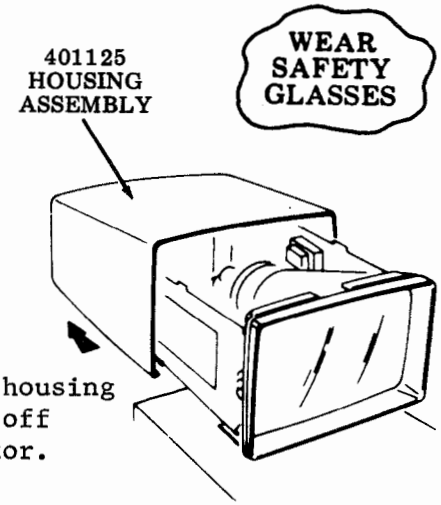

② Move housing back off monitor.

Heatsink to Lowered Position

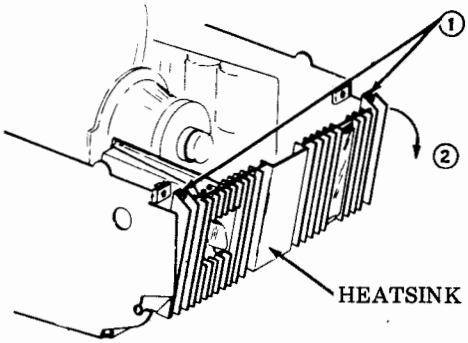

① Rotate both slotted fastener heads 1/4-turn counterclockwise.

② Lower.

410852 Rectifier Circuit Card Assembly

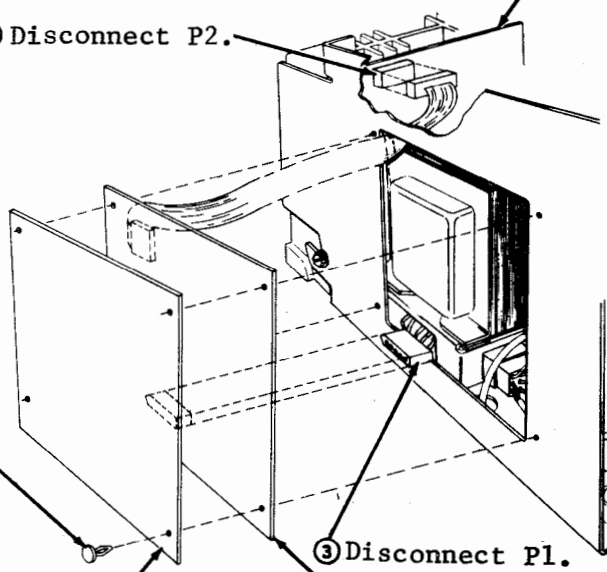

(Left Side View)

① Disconnect P2.

② Pry loose (four corners). 341546 (part of 410852).

③ Disconnect P1.

C. DISPLAY MONITOR (40MN101/AA) (Cont)

3. DISASSEMBLY PROCEDURES (Cont)

410853 Regulator Circuit Card Assembly

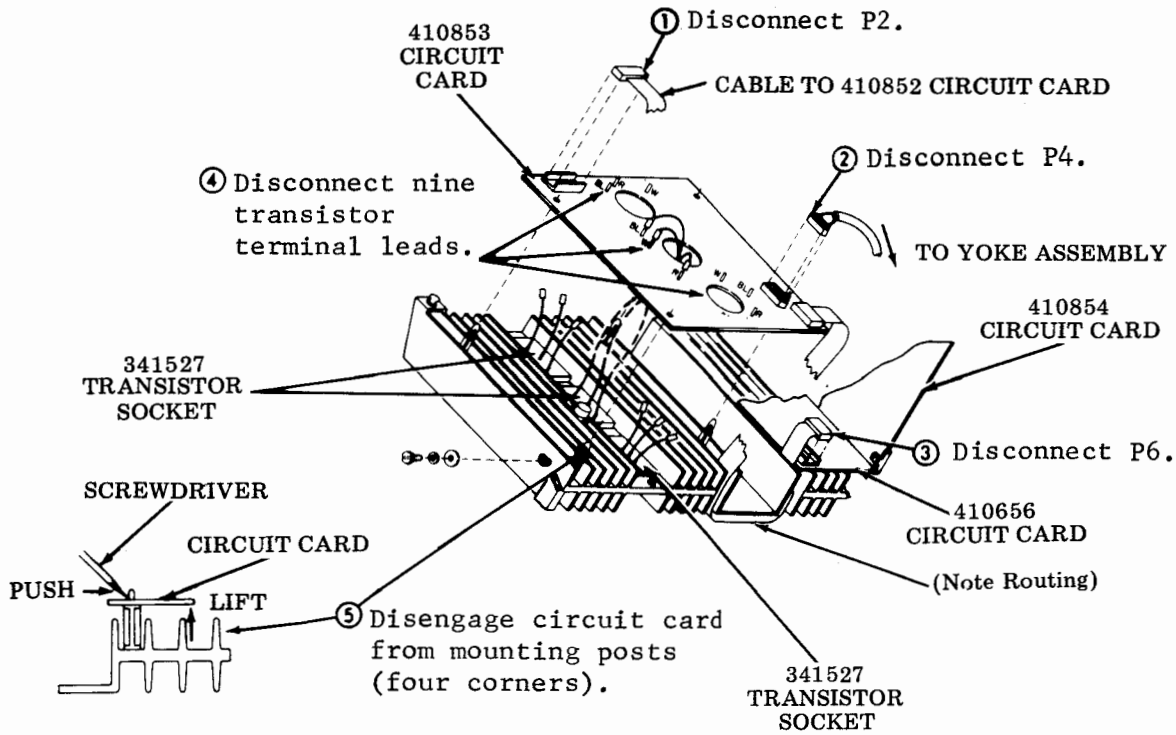

410854 High Voltage Circuit Card Assembly

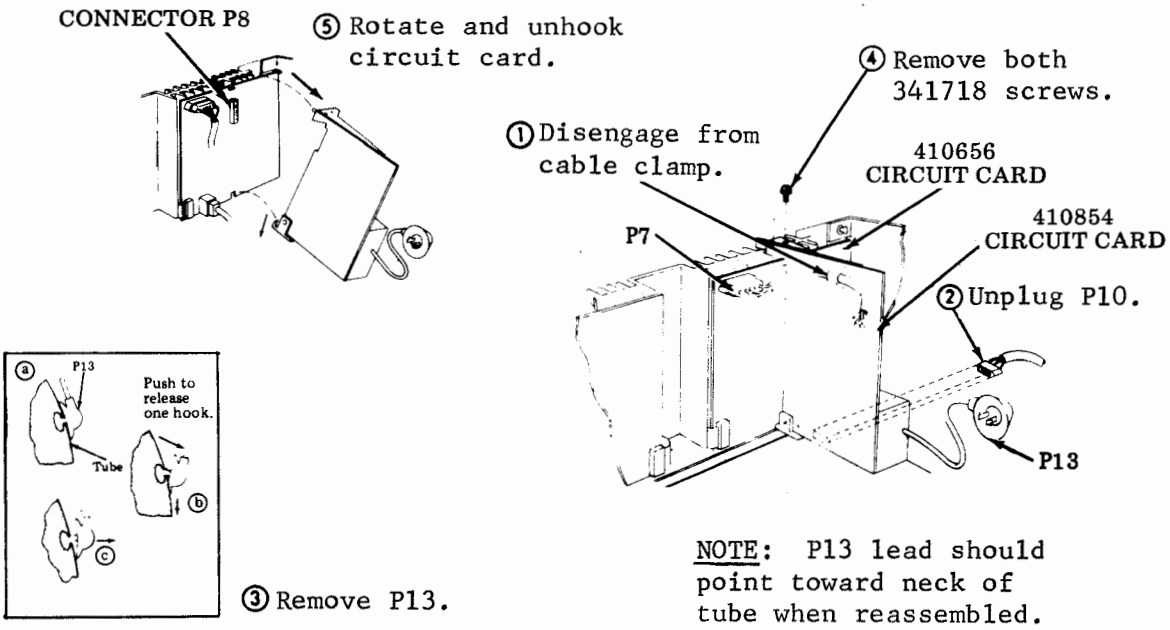

NOTE: P13 lead should point toward neck of tube when reassembled.

410656 Interface/Amplifier Circuit Card Assembly

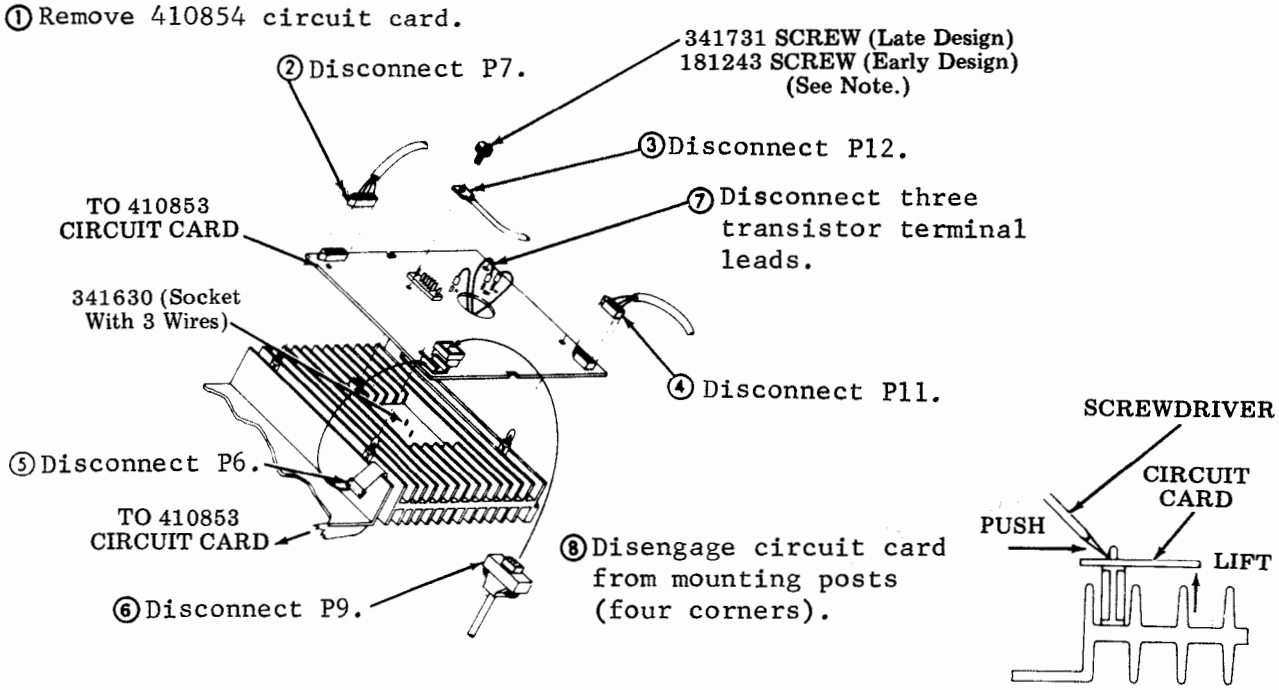

NOTE: Replace 181243 screw (metal) with 403594 modification kit (nylon screw, bushing, and lockwasher). This modification is required on units with serial numbers below 10,000. Later units already conform. (Additional information may be found in PART 9 -- ACCESSORIES, 403594 Modification Kit.)

341721 Power Distribution Assembly

① Remove the 410852 circuit card assembly.

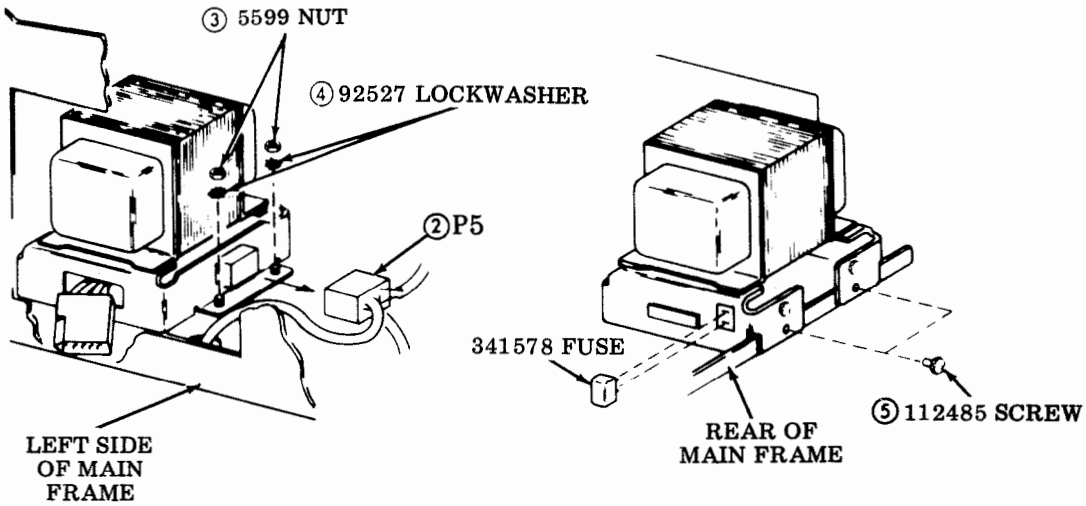

C. DISPLAY MONITOR (40MN101/AA) (Cont)

3. DISASSEMBLY PROCEDURES (Cont)

341559 Brightness Control W/Cable Assembly

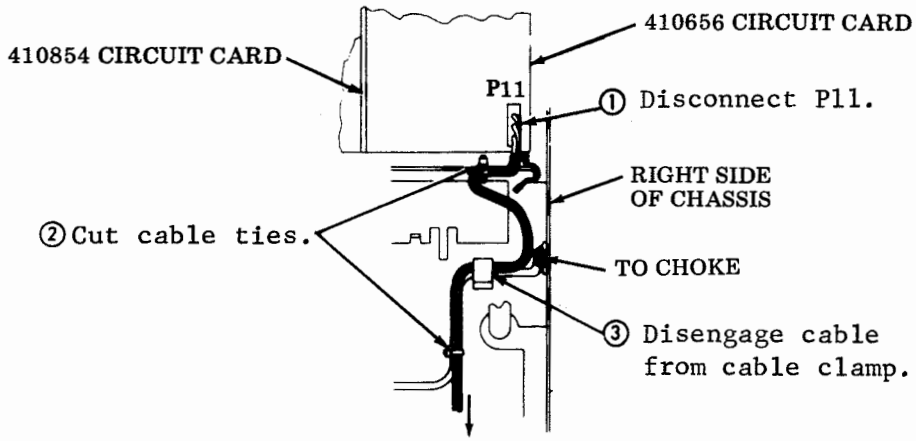

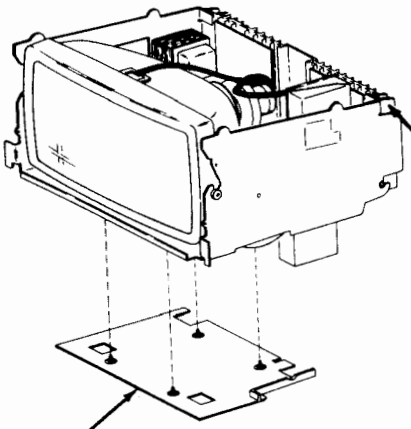

④ Secure heatsink.

⑥ Remove monitor from Model 40 cabinet and rest, heatsink down, on bench top.

⑤ Remove bottom plate; pry loose at fasteners.

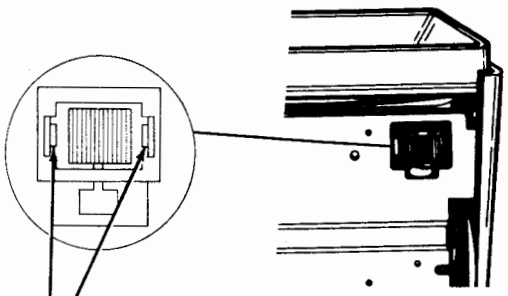

⑦ Locking tabs accessible at pry points in sides of brightness control. Pry with small screwdriver. Pull control gently outward from bottom of chassis.

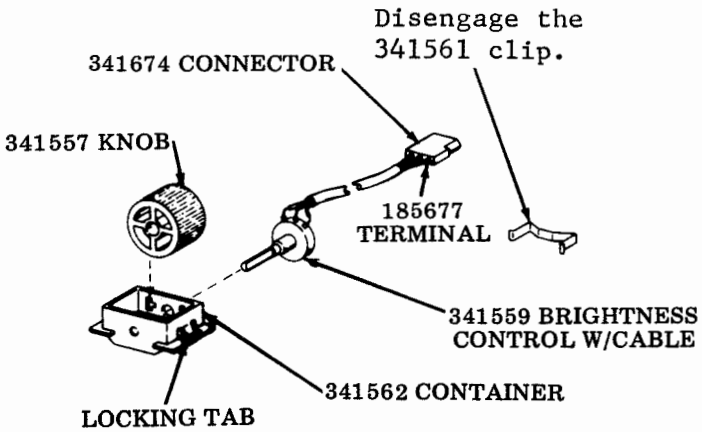

341726 Monitor OFF/ON Control Assembly

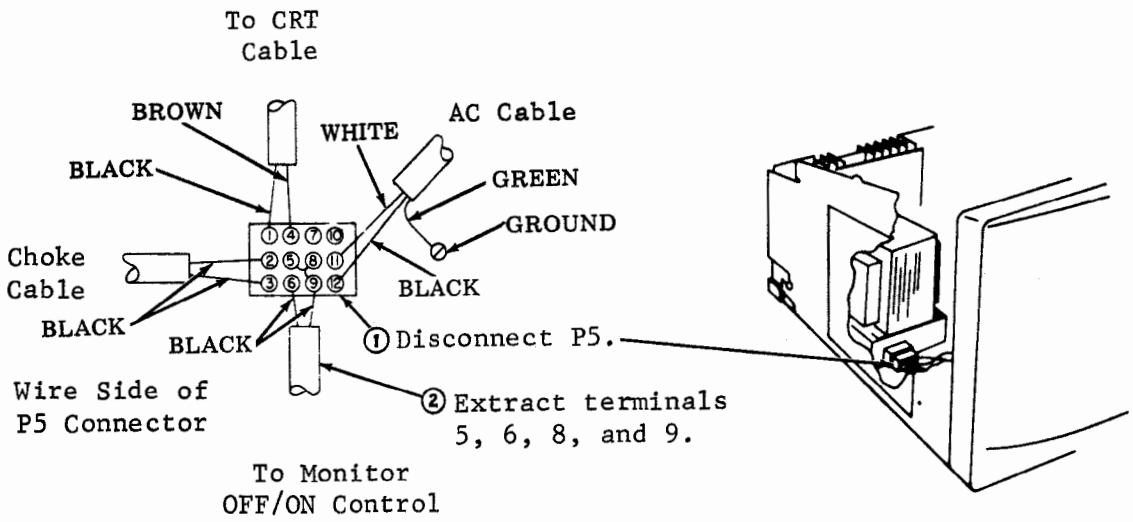

③ Secure heatsink.

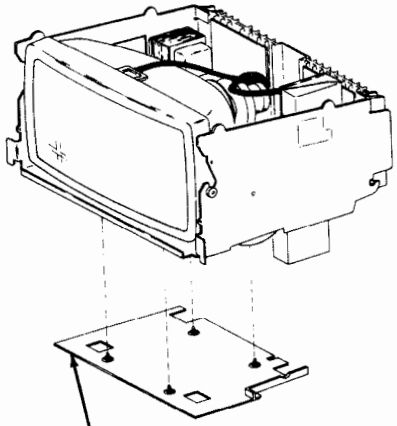

④ Remove bottom plate; pry loose at fasteners.

⑤ Remove monitor from Model 40 cabinet and rest, heatsink down, on bench top.

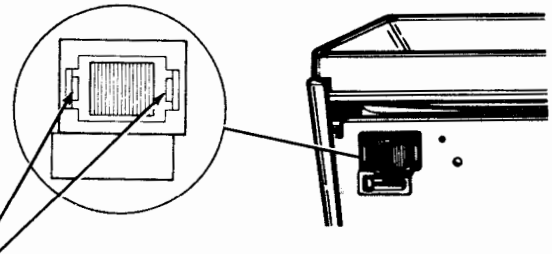

⑥ Locking tabs accessible at pry points in sides of OFF/ON control. Pry with small screwdriver. Pull control gently outward from bottom of chassis.

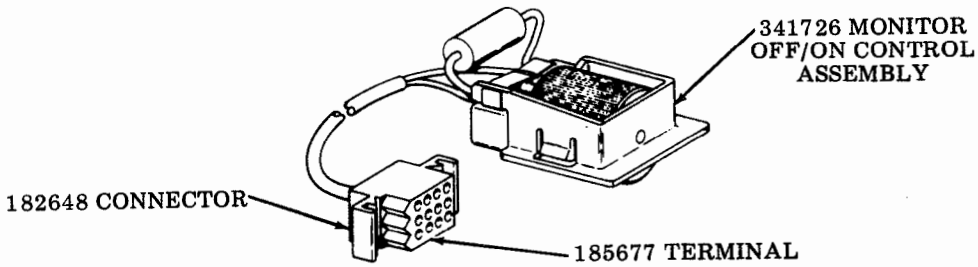

C. DISPLAY MONITOR (40MN101/AA) (Cont)

3. DISASSEMBLY PROCEDURES (Cont)

Heatsink Transistors

① Secure heatsink in upright position.

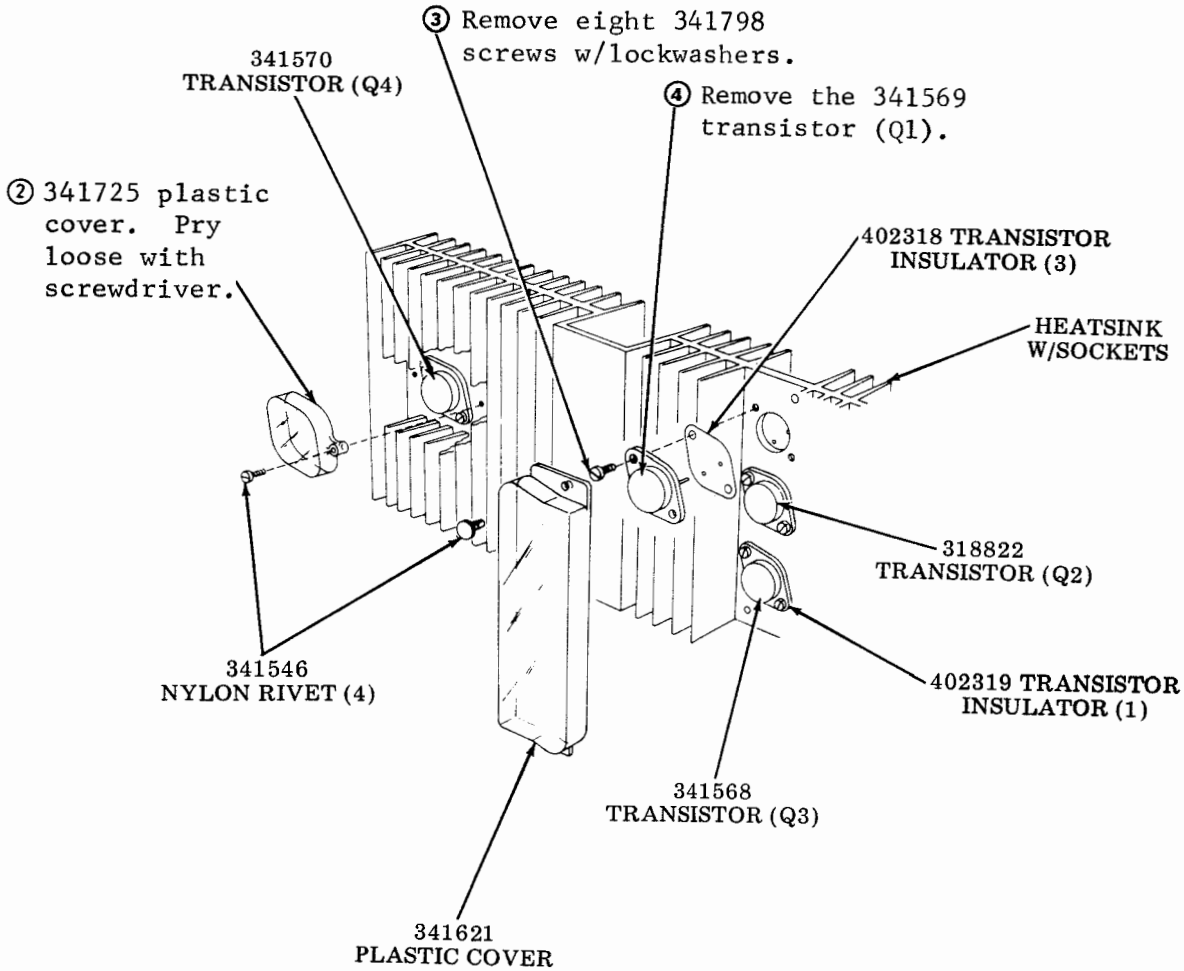

NOTE: The 402318 and 402319 transistor insulators require heat conducting paste applied on both sides.

341699 CRT Cable Assembly

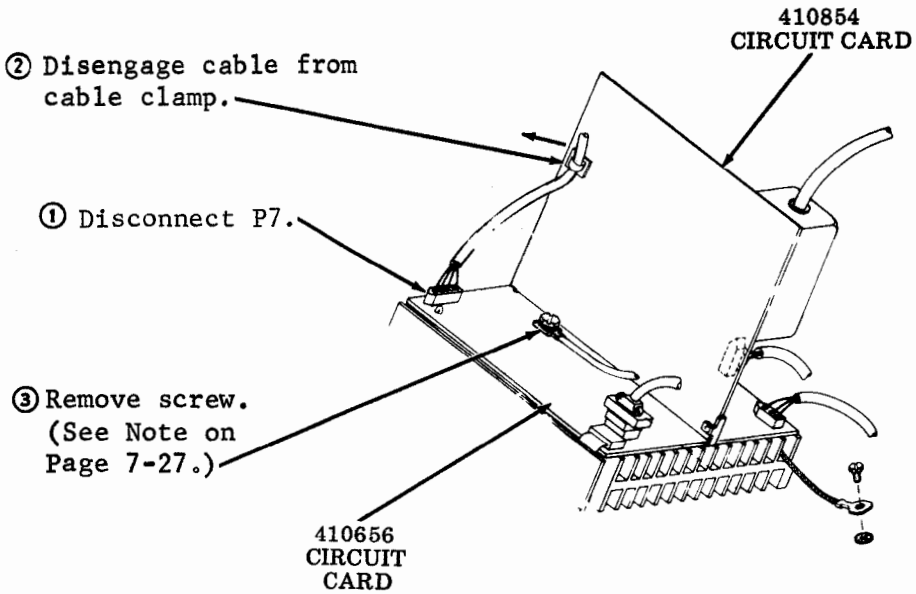

⑦ Disconnect CRT socket from neck of tube (heatsink lowered).

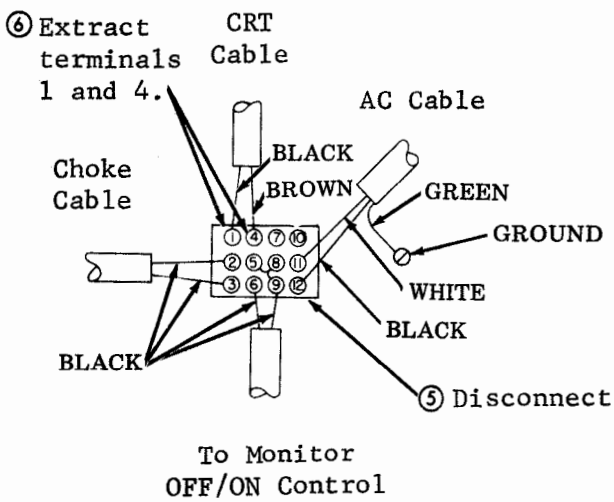

Wire Side of P5 Connector

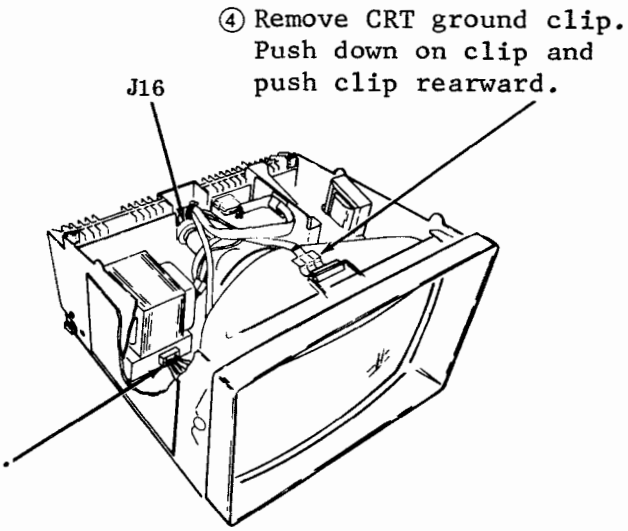

C. DISPLAY MONITOR (40MN101/AA) (Cont)

3. DISASSEMBLY PROCEDURES (Cont)

341698 Deflection Yoke Assembly

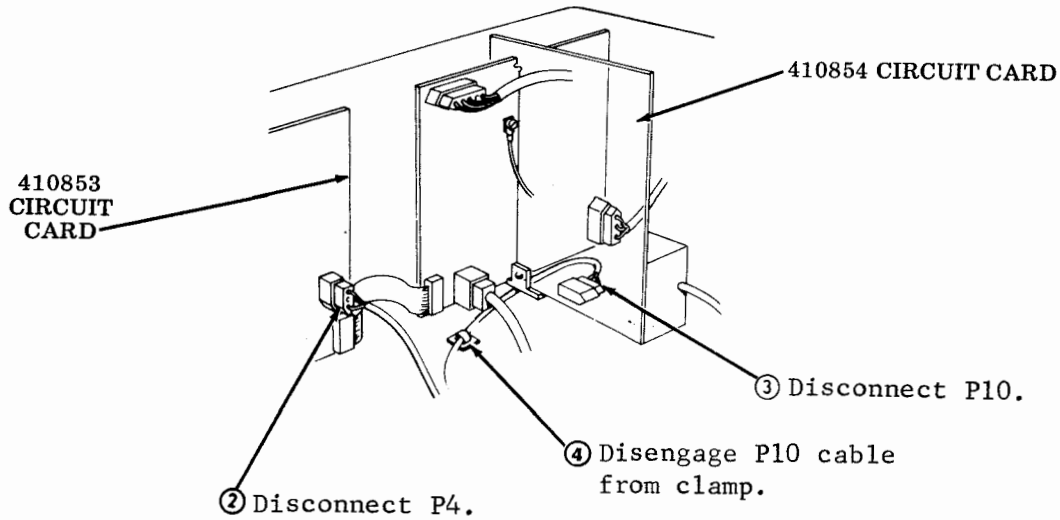

⑤ Raise neck of CRT to highest angle by rotating tube tilt control.

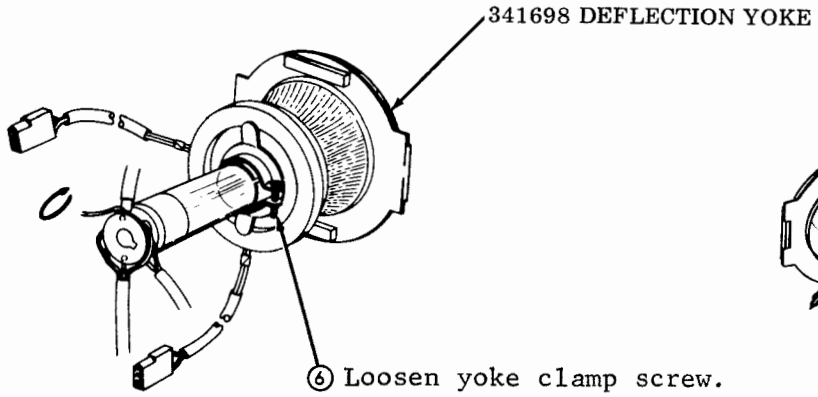

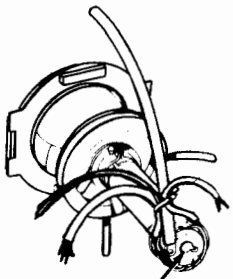

① Disconnect CRT socket J16 from neck of tube.

NOTE: In reassembly, make certain that proper connectors are remated. Do not overtighten yoke clamp screw.

341689 Choke Assembly

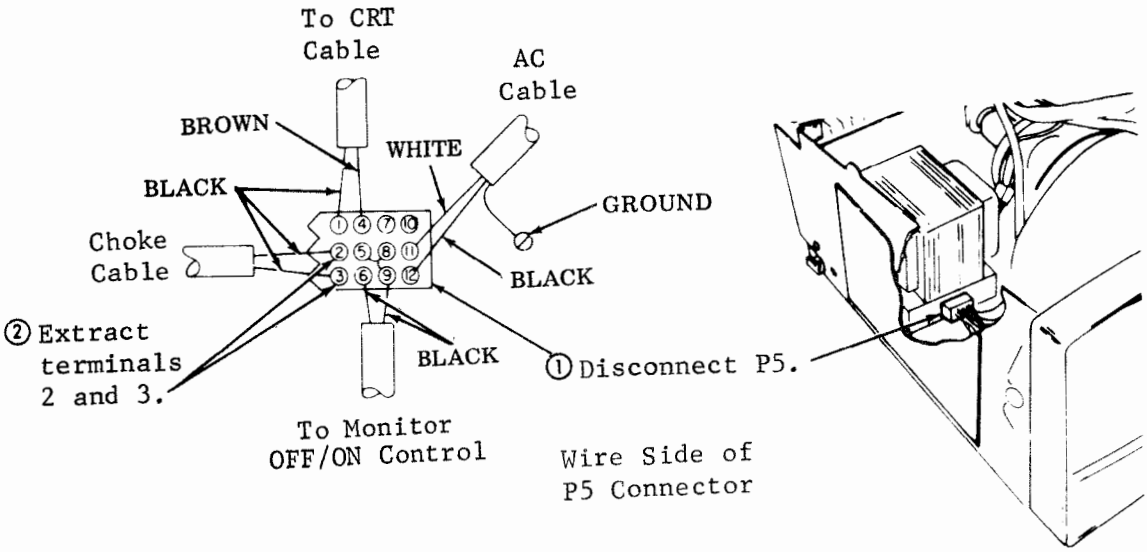

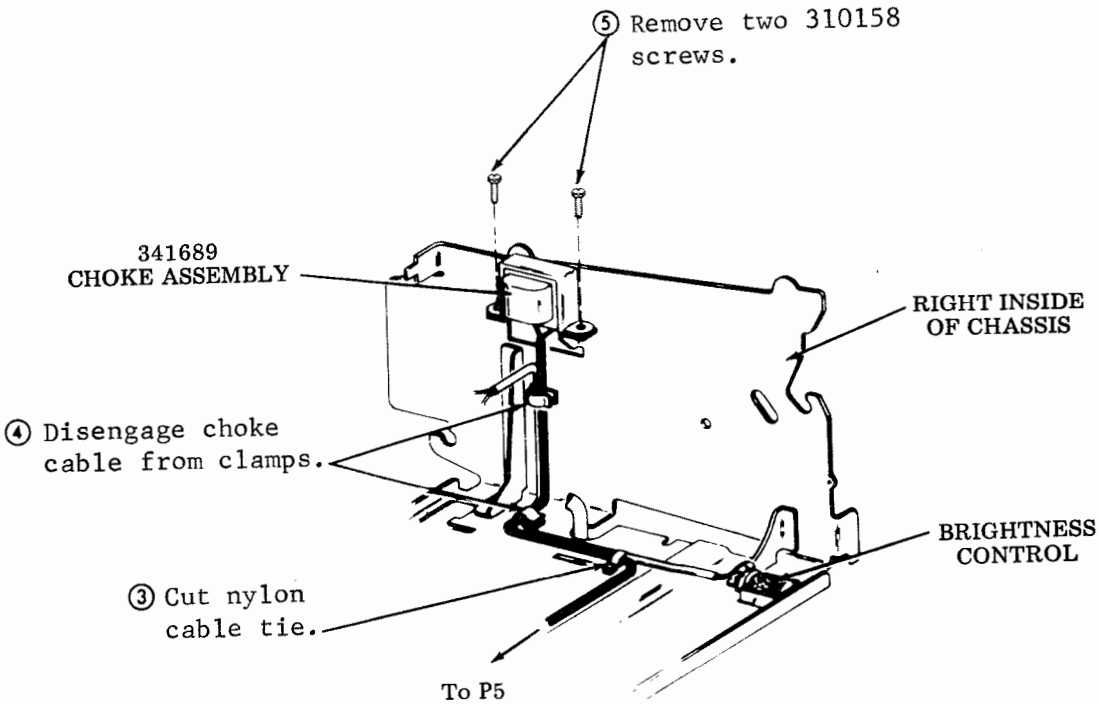

C. DISPLAY MONITOR (40MN101/AA) (Cont)

3. DISASSEMBLY PROCEDURES (Cont)

Tube Tilt Mechanism

Wheel Type

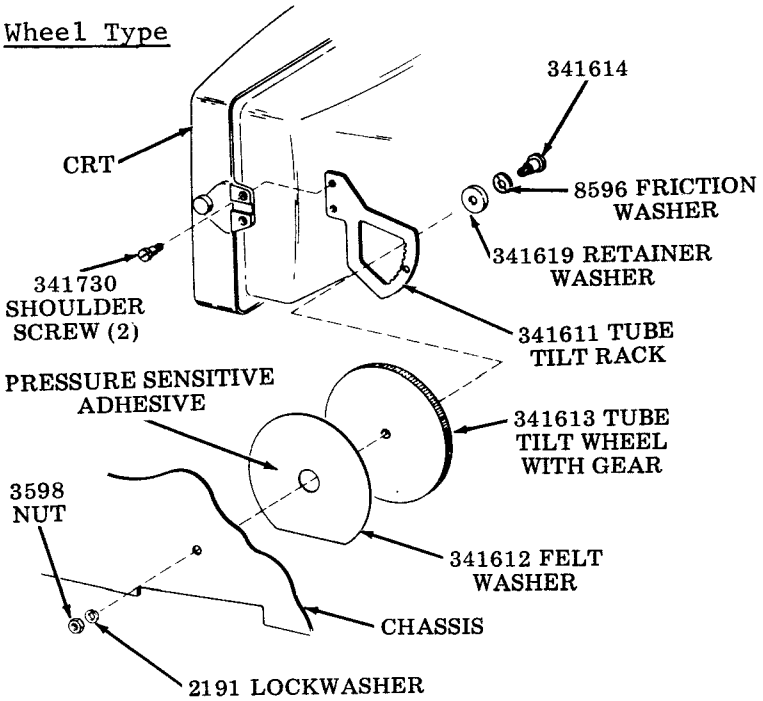

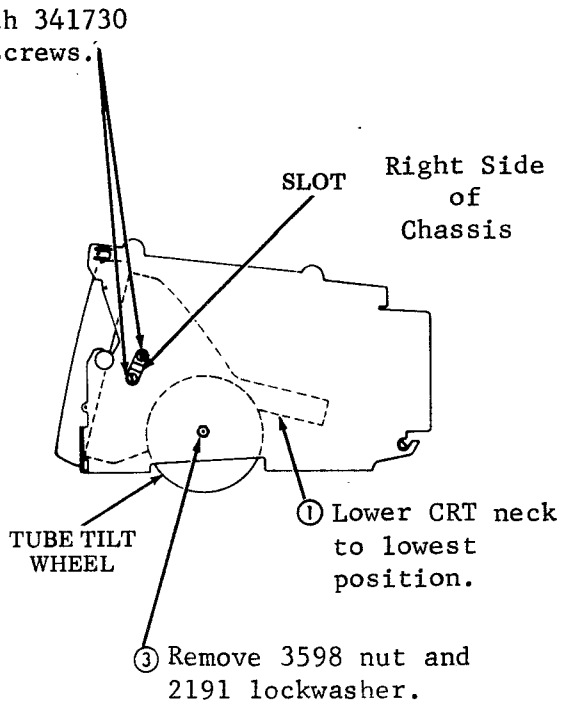

Lever Type

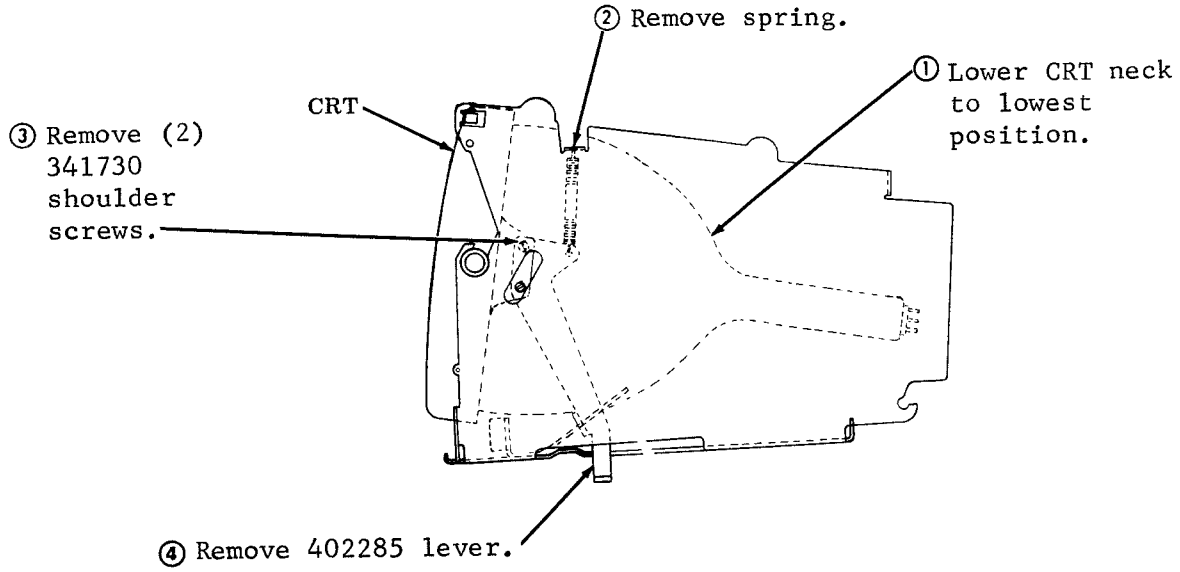

341502 Cathode Ray Tube

① Remove the deflection yoke assembly.

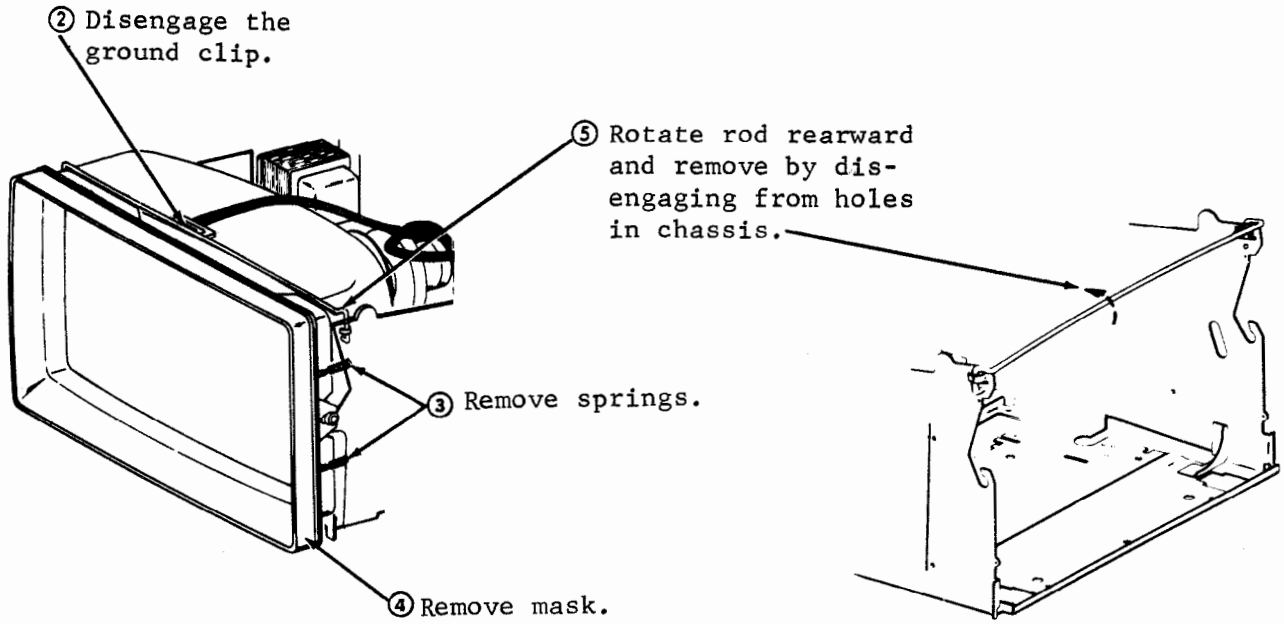

⑥ Remove the tube tilt mechanism.

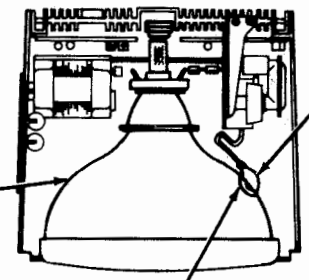

CAUTION: OBSERVE SAFETY PRECAUTIONS FOR CATHODE RAY TUBES.

NOTE: Use mask as a base to cradle the CRT (face down) on flat surface.

C. DISPLAY MONITOR (40MN101/AA) (Cont)

3. DISASSEMBLY PROCEDURES (Cont)

Heatsink Assembly

① Disconnect P2, P4, P7, P9, P10, and P11.

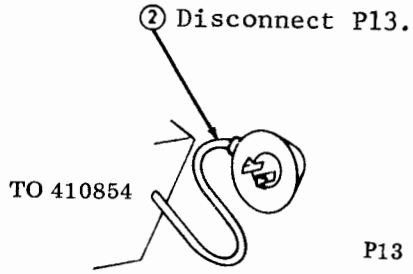

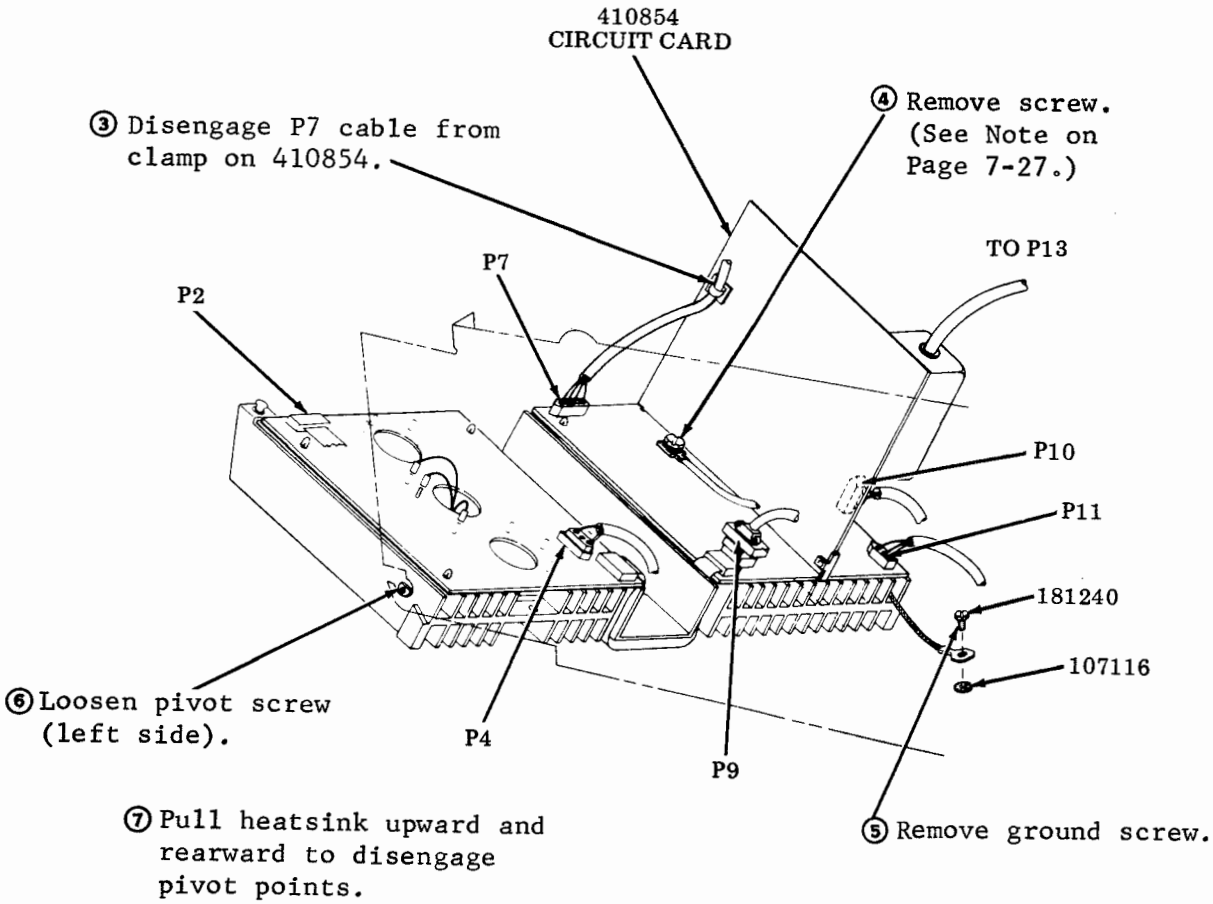

341582 Video Cable Assembly and Right Support Bracket

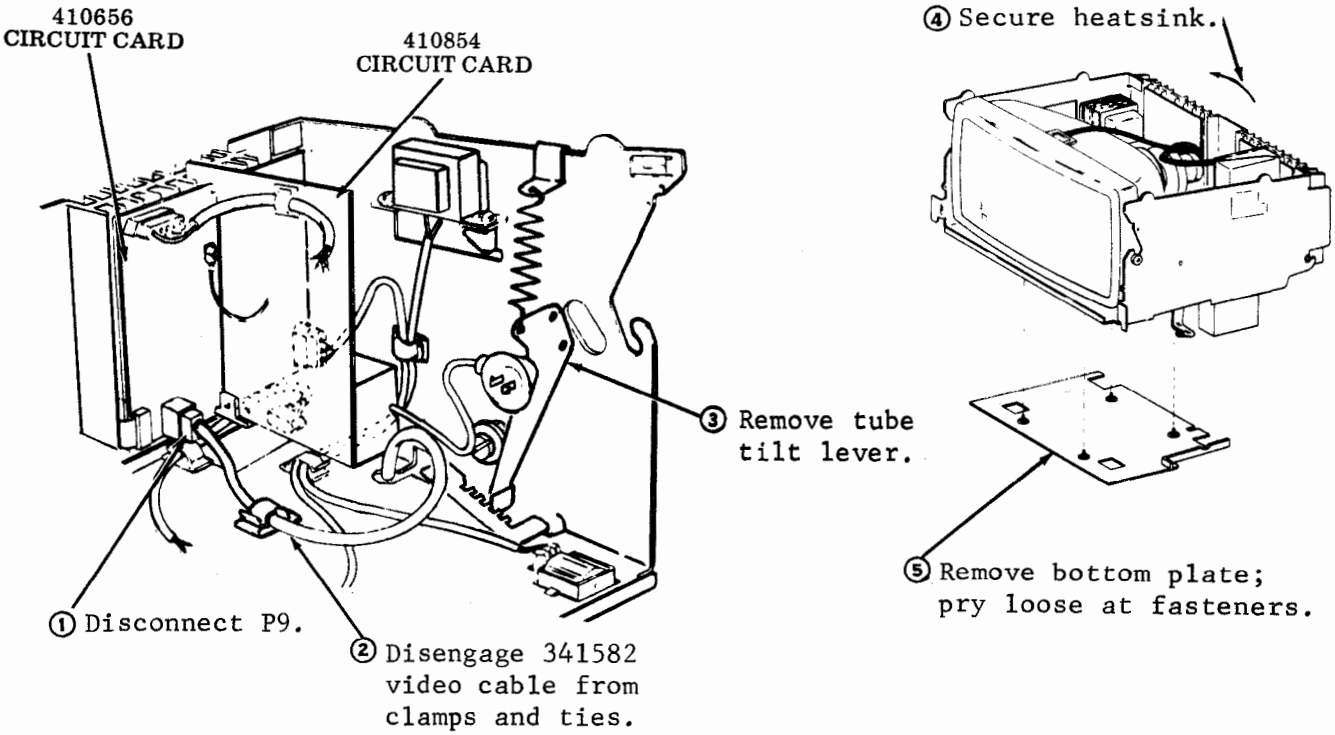

⑥ Remove monitor from Model 40 cabinet, and rest, heatsink down, on bench top.

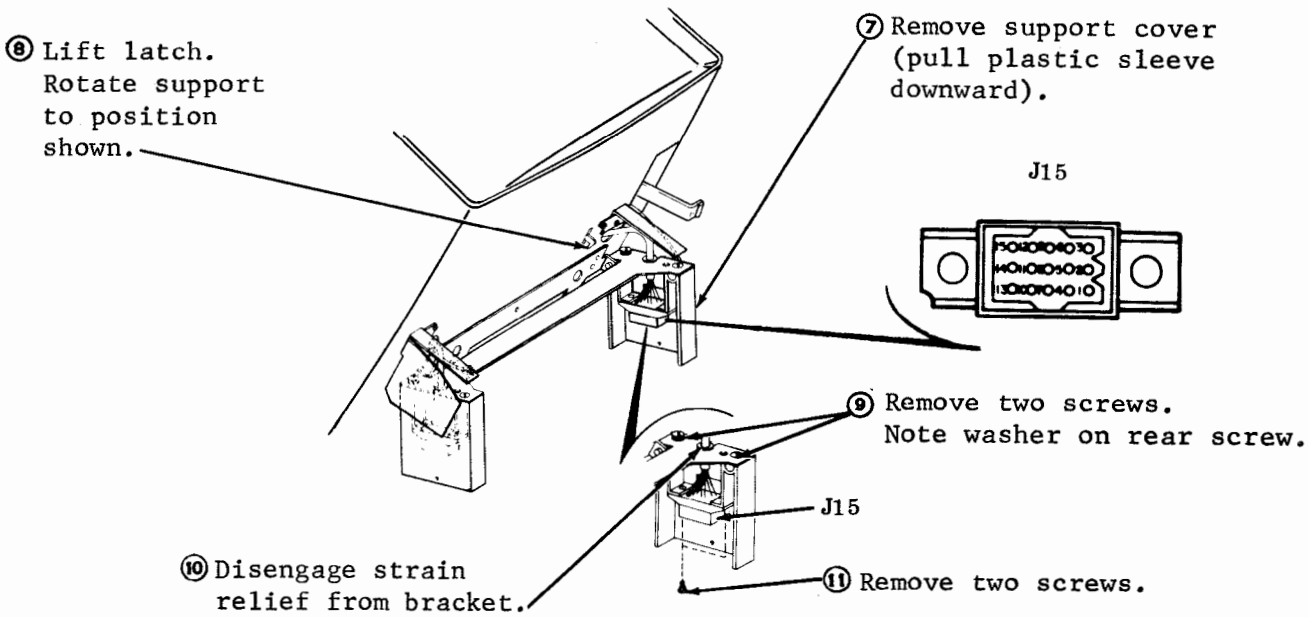

C. DISPLAY MONITOR (40MN101/AA) (Cont)

3. DISASSEMBLY PROCEDURES (Cont)

341581 AC Cable Assembly and Left Support Bracket

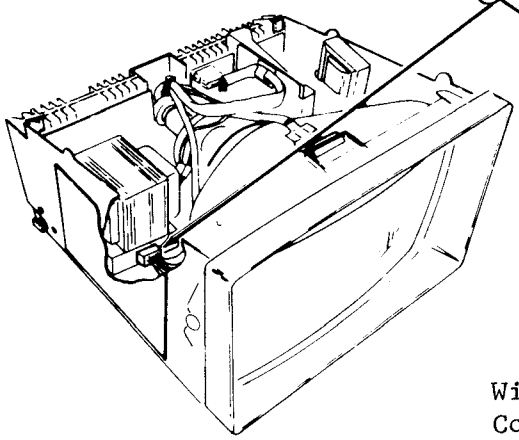

① Disconnect P5.

② Extract terminals 7, 10, 11, and 12.

CRT Cable

AC Cable

WHITE

Choke Cable

GREEN

Ground

BLACK

Wire Side of Connector P5

③ Remove ground screw.

To Monitor OFF/ON Control

⑧ Lift latch. Rotate support to position shown.

⑨ Remove two screws. Note washer on rear screw.

④ Secure heatsink.

J14

⑦ Remove support cover (pull plastic sleeve downward).

⑩ Disengage strain relief from bracket.

⑪ Remove two screws.

⑤ Remove bottom plate; pry loose at fasteners.

⑥ Remove monitor from Model 40 cabinet, and rest, heatsink down, on bench top.

D. POWER SUPPLY (40PSU101/AA)

1. DISASSEMBLY PROCEDURES

Drawings are used to identify the replaceable components, and numbered instructions describe the procedures necessary to disassemble those replaceable components.

When removing a replaceable component, do not force or pry any parts to provide the necessary clearance for removal.

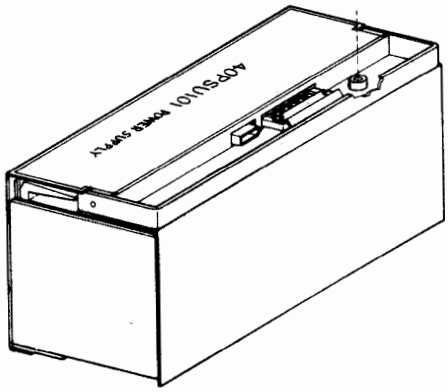

Remove the two screws holding the 401020 terminal block insulator in place and remove the insulator.

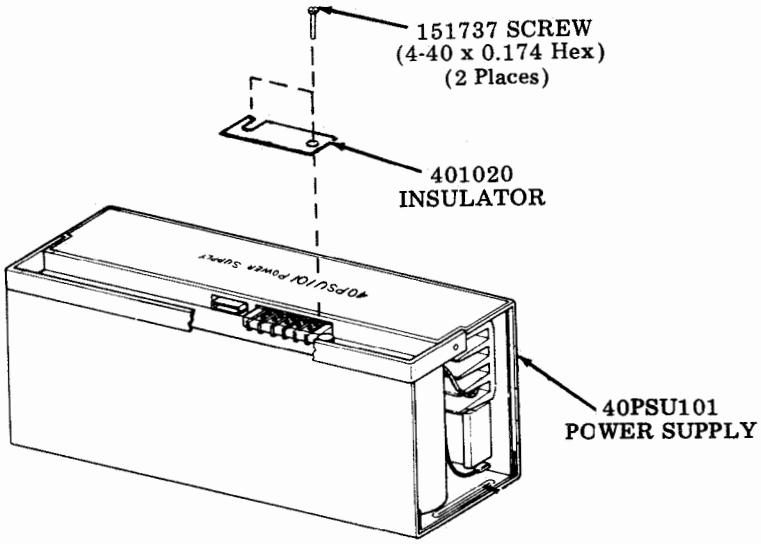

Cover Removal

① Turn the unit on its side and remove the four screws which secure the power supply cover to the power supply frame.

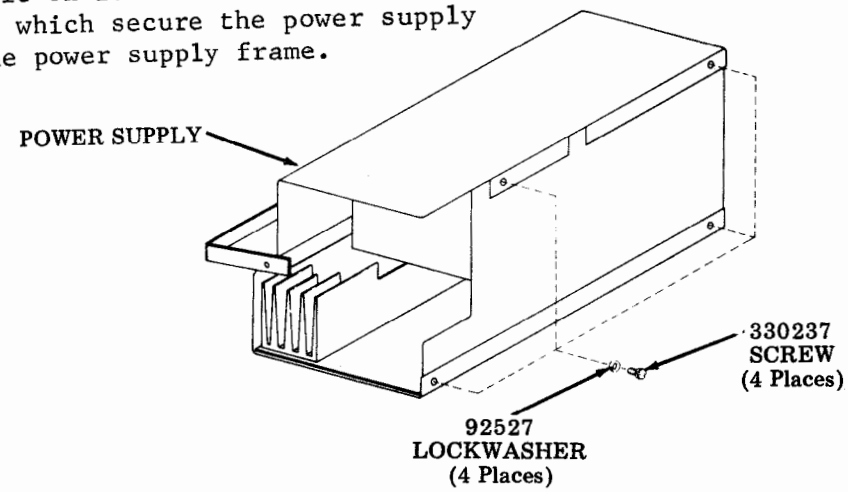

D. POWER SUPPLY (40PSU101/AA) (Cont)

1. DISASSEMBLY PROCEDURES (Cont)

Cover Removal (Cont)

② Again turn the power supply unit upright. Gently spread the side panels of the cover enough to slide the cover half-way up off of the power supply frame.

③ Unsnap the ac power receptacle (3-pin connector) from its mount on the cover.

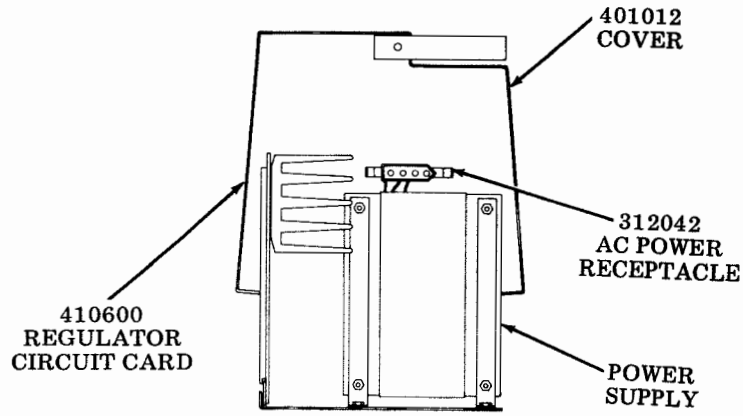

④ Slide the cover completely off of the power supply and place the cover aside. Remove the 403591 insulator facing the noncomponent side of the 410600 regulator circuit card.

⑤ The handle may be removed by taking out the two shoulder screws which hold the handle to the case.

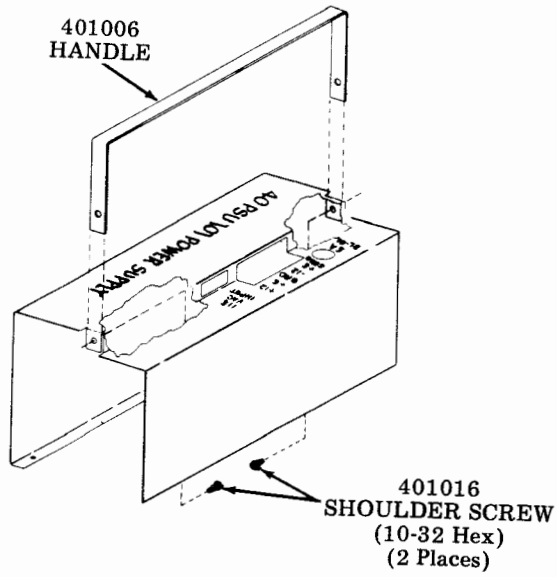

Regulator Circuit Card Removal

① While holding the 410600 regulator circuit card firmly, remove the two screws which mount the regulator circuit card to the power supply frame.

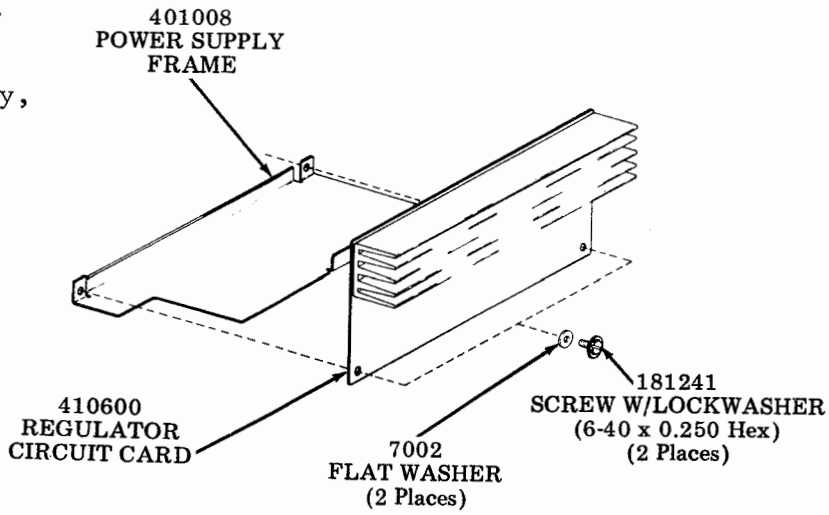

② Gently rotate the 410600 regulator circuit card upward and outward from the power supply. Leave all wires attached.

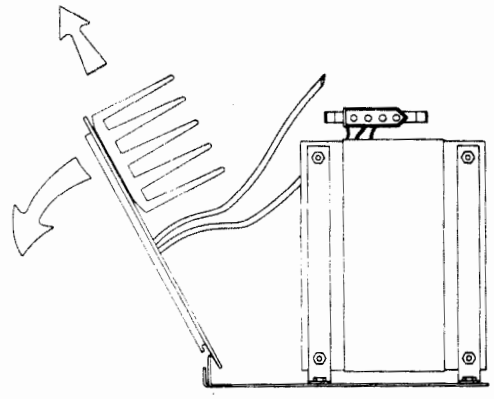

Wiring Removal

① Remove the wires from the 410600 circuit card.

NOTE: Be careful not to damage any components on the circuit card when removing the wires.

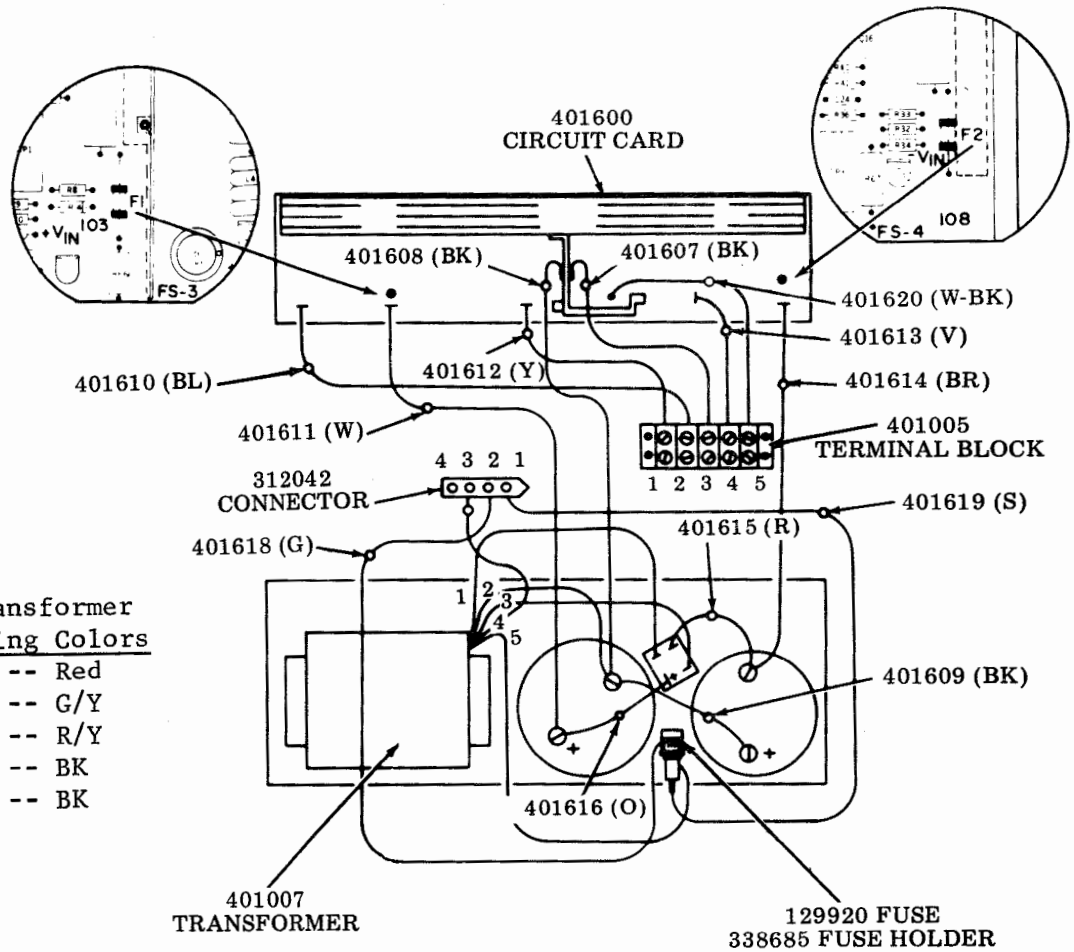

Transformer
Wiring Colors
1 -- Red
2 -- G/Y
3 -- R/Y
4 -- BK
5 -- BK

② The two black wires attached to the circuit card buss bar can be removed by taking out the nut and screw which holds both wires to the buss bar.

D. POWER SUPPLY (40PSU101/AA) (Cont)

1. DISASSEMBLY PROCEDURES (Cont)

Wiring Removal (Cont)

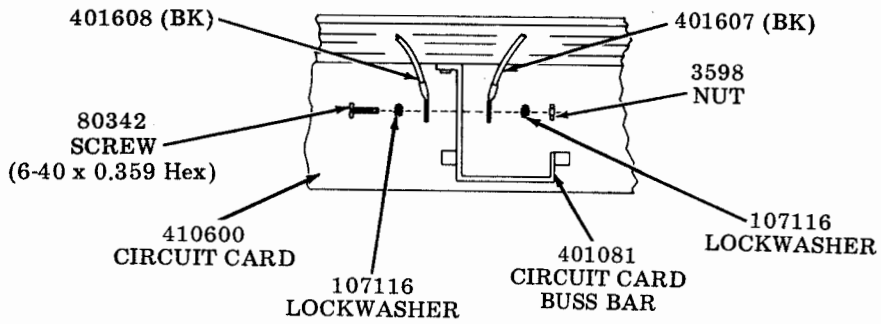

Terminal Block Removal

Remove the two studs which hold the terminal block to the capacitor clamp.

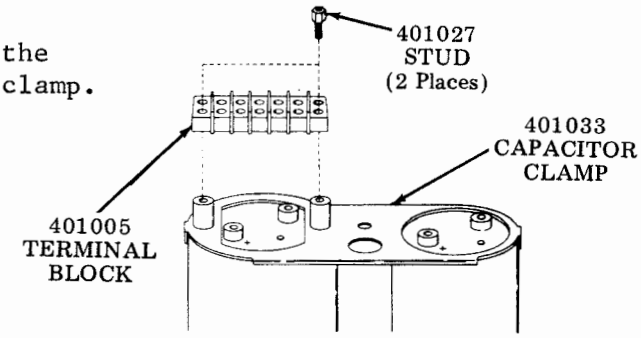

Bridge Rectifier

① Remove the four wires attached to the terminals on the bridge rectifier.

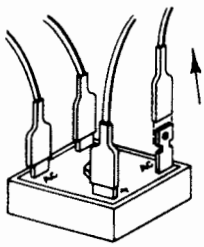

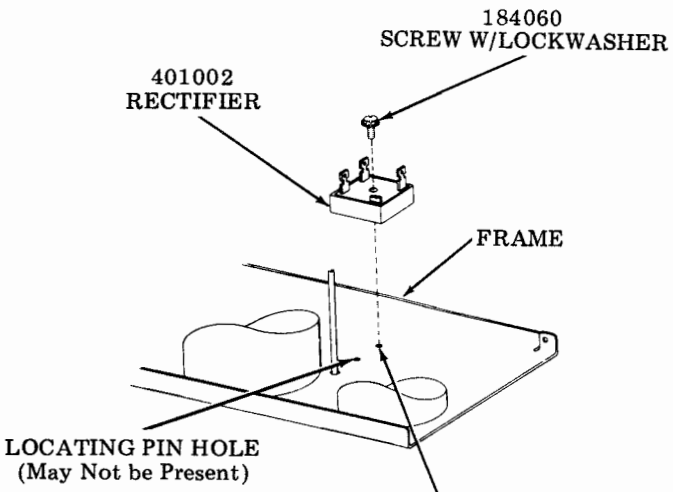

② Remove the screw in the center of the bridge rectifier and remove the rectifier.

If rectifier does not have a locating pin, reassemble in position per sketch.

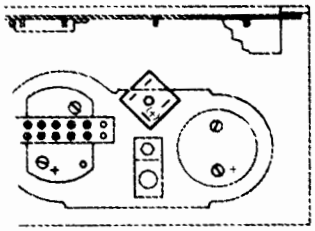

Transformer Removal

① Remove the four screws on the mounting legs of the transformer and lift the transformer off the frame.

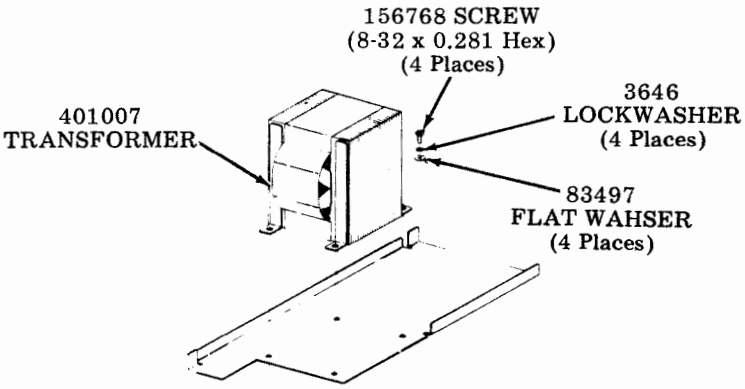

② The 312042 ac power receptacle is attached to the transformer wiring as shown. It is removed by cutting the black wire in the center of the heat shrink area.

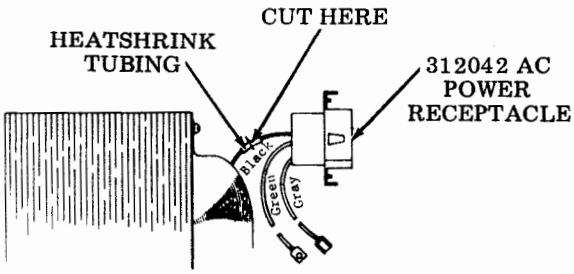

Fuse Assembly, Capacitor Clamp, and Capacitor Removal

① Remove the two hex nuts which hold the fuse assembly and capacitor clamp together. Remove the gray wire at the rear of the fuse assembly and lift off the fuse assembly.

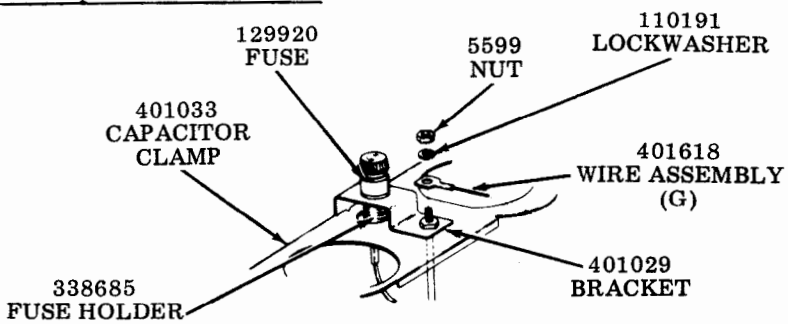

D. POWER SUPPLY (40PSU101/AA) (Cont)

1. DISASSEMBLY PROCEDURES, Fuse Assembly, Capacitor Clamp, and Capacitor Removal (Cont)

② Remove the red, black, brown, orange, green, and white wires from the capacitor terminals.

③ Lift off the capacitor clamp and remove the two capacitors.

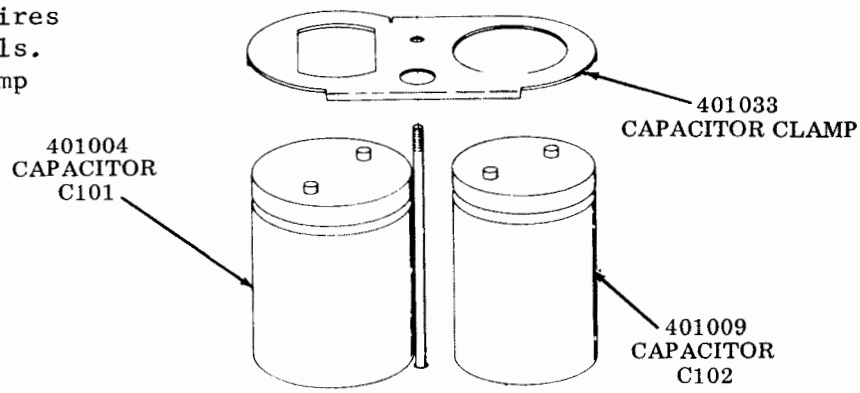

2. SPECIAL ASSEMBLY INSTRUCTIONS

Capacitors, Capacitor Clamp, and Fuse Assembly

Instruction No. 1:

Right side mounting holes on 401008 frame to be used when power transformer is equipped with end bell.

Instruction No. 2:

Capacitor vent holes must not be covered by clamp.

Instruction No. 3:

Prior to tightening the 5599 nut, bias the capacitors to the outermost ends of the capacitor clamp and forward to the formed-up edge of the power supply frame.

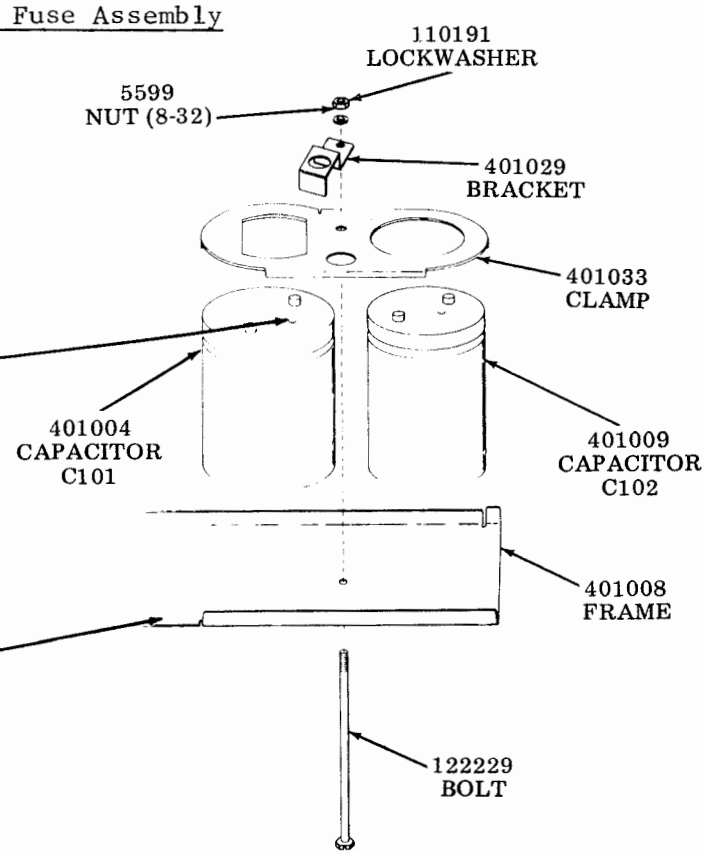

Regulator Circuit Card

Instruction:

When mounting the 410600 circuit card to the 401008 frame, make certain that the two wires (401608 and 401611) are not pinched by the baffle. Also make sure that the blue wire is routed under the baffle and the white wire is routed over the transformer.

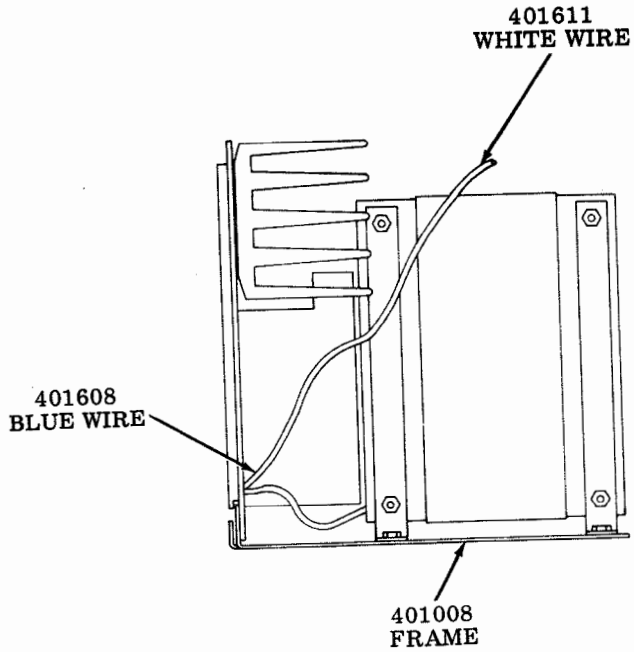

AC Power Receptacle -- No special instructions required.

Cover Assembly -- No special instructions required.

E. OPERATOR CONSOLES

Precautions should be taken to assure that the console is disassembled and reassembled under clean conditions. No oil, grease, or other liquids should be present on loose parts, subassemblies, keyswitches, or the complete console.

Reference in the procedures to left or right and up or down and top or bottom, etc, refer to the opcon in its normal operating position.

When removing a subassembly or part from the opcon, do not force or pry parts to provide the necessary clearance for removal. No forcing is required to accomplish a removal procedure. Follow the removal procedure and note how each part is removed and the sequence of its removal so that proper reassembly can be accomplished.

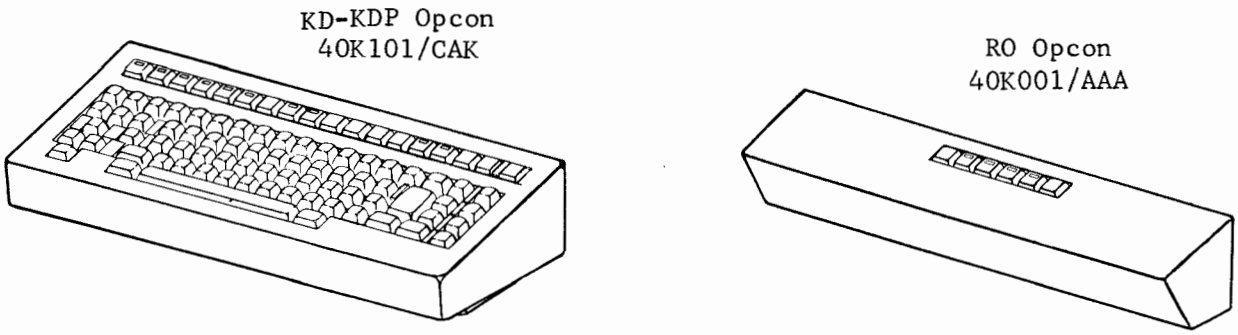

Operator Consoles

The following procedures apply to KD-KDP and RO opcons:

To remove operator console from set or station:

a. Place thumb on left inward tab of console and press downward to unlatched position.
b. Hold console firmly with left hand, and with right hand place thumb on right inward tab and press downward to unlatched position.
c. Pull console forward to disengage from cabinet.

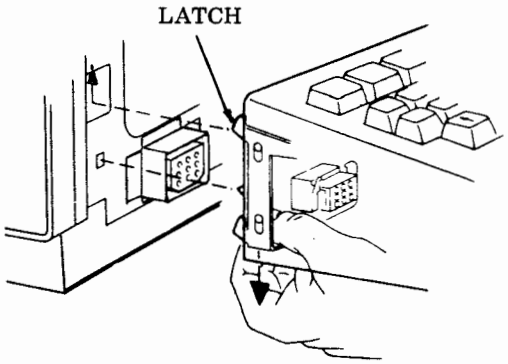

Opcon Removal

To install operator console on set or station:

a. Slide left and right latches down.
b. Engage connector and left and right guides into slots.
c. Slide left and right latches upward into latched position.

CAUTION: CHECK THAT OPCON IS FIRMLY ATTACHED ON BOTH SIDES BEFORE RELEASING HOLD.

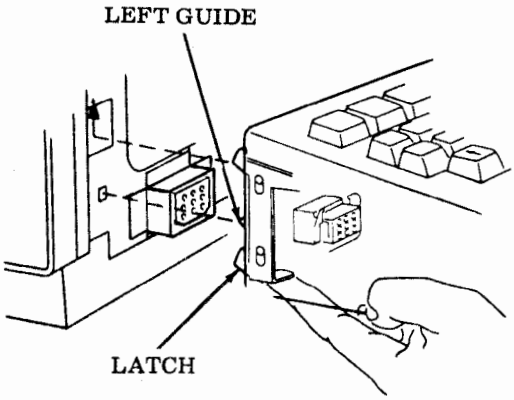

Opcon Replacement

1. KEYTOP CONVERSIONS FOR KD-KDP OPCONS

Keytop conversions can easily be performed by substituting certain designated keytops or blocking keytops without removing the opcon from the set or station.

The keytop groupings that are affected in conversions are shown below. If conversions are made to directly substitute opcons with different arrangements, the necessary parts can be interchanged between units.

There are two types of keytops involved in conversions: control keytop and blocking keytop. Refer to the keytop disassembly and reassembly procedures for part numbers required when keytops must be ordered and stocked to provide these conversions.

Keytop Groupings

Printer Group

Expanded Memory Group

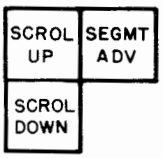

Conversation Mode Group

Up-Low

Full Edit Group

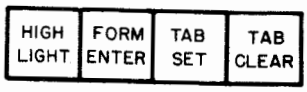

or

E. OPERATOR CONSOLES (Cont)

1. KEYTOP CONVERSIONS FOR KD-KDP OPCONS (Cont)

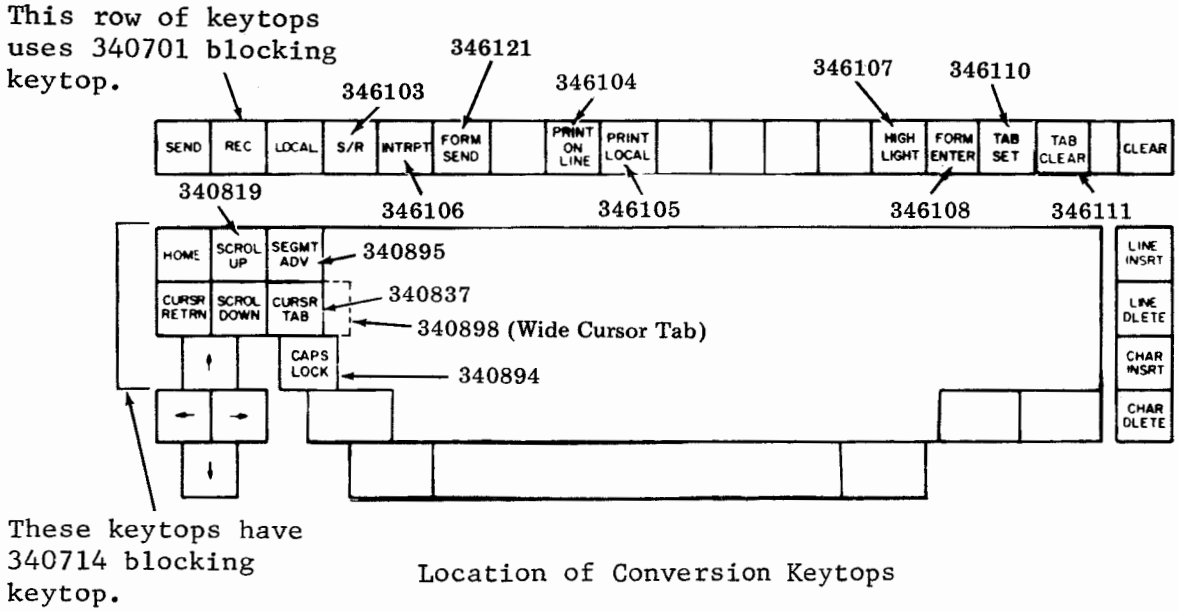

Location of Conversion Keytops

2. KEYTOP CONVERSIONS FOR RO OPCONS

Keytop conversions can easily be performed by substituting certain designated keytops or blocking keytops without removing the opcon from the set.

The keytops that are affected in conversions are TRANS START and DATA ERROR. If conversions are made to directly substitute opcons with different arrangements, the necessary parts can be interchanged between units.

There are two types of keytops involved in conversions: control keytop and blocking keytop. Refer to the keytop disassembly and reassembly procedures for part numbers required when keytops must be ordered and stocked to provide these conversions.

Control Keytop

Indicator
Non-Indicator

Data Keytop

Blocking Keytops

① Control ② Data ③ For Wide Cursor Tab

Control and Blocking Keytops

Layout of RO Opcon

3. SUBASSEMBLY IDENTIFICATION -- KD-KDP Opcon (40K101/CAK)

CAUTION: TO AVOID POSSIBLE INTERNAL DAMAGE TO THE OPCON MOS SOLID STATE CIRCUITRY, WEAR THE STATIC DISCHARGE STRAP WHEN HANDLING CIRCUIT CARDS.

Major Parts Identification for KD-KDP Opcons

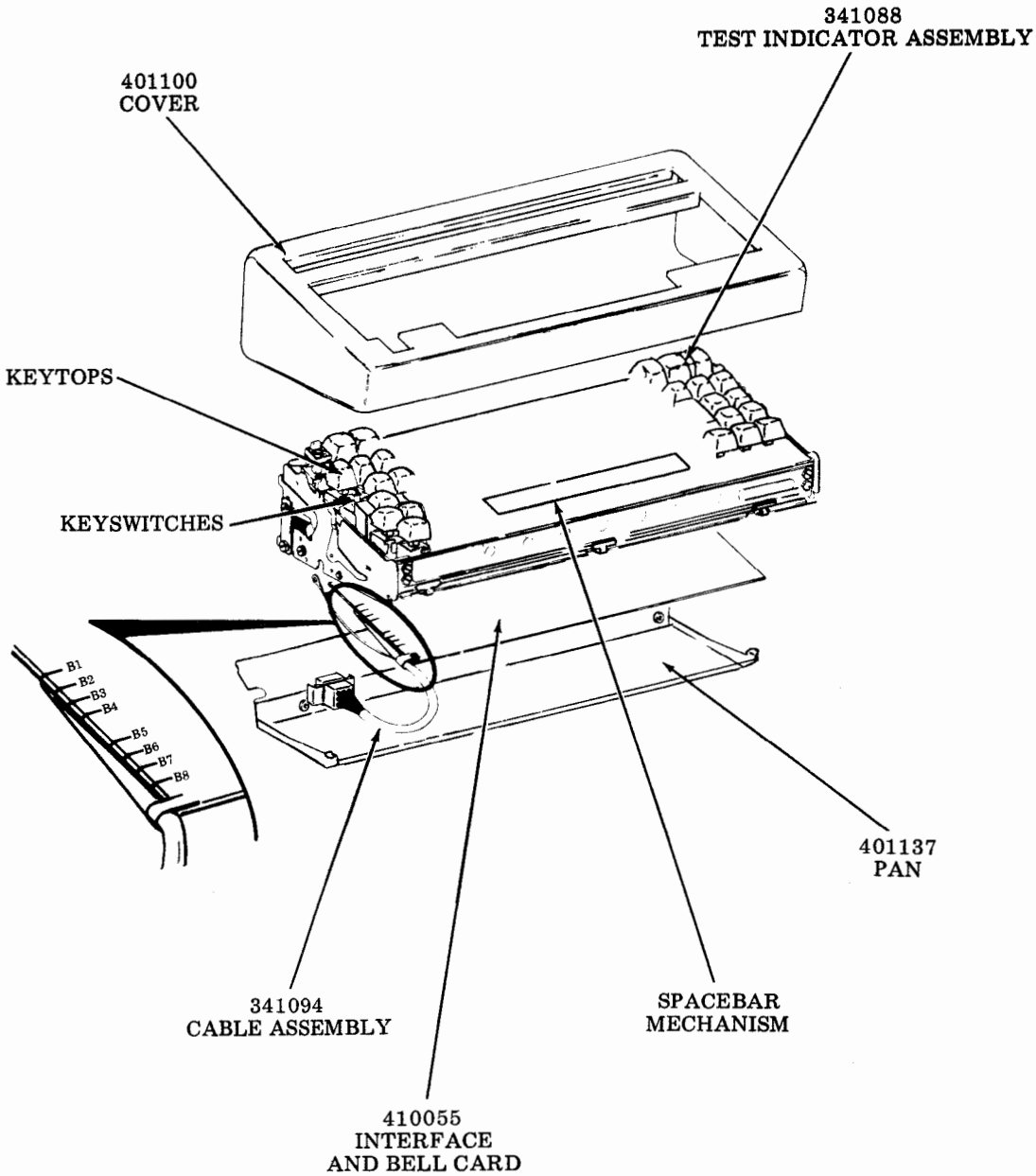

E. OPERATOR CONSOLES (Cont)

4. DISASSEMBLY PROCEDURES -- KD-KDP OPCON (40K101/CAK)

Cover

① Stand opcon upright on back side as shown.

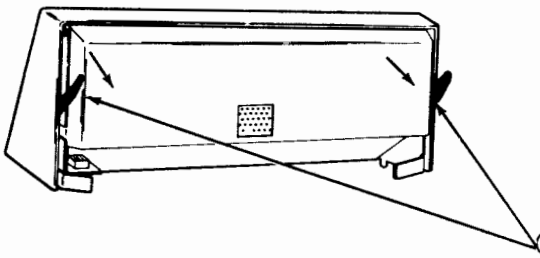

② Use a thin bladed screwdriver or orange stick and pry left and right levers down. Remove cover.

Pan

① Stand opcon upright on front side as shown.

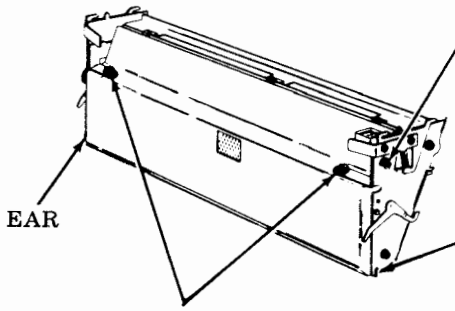

③ Remove 184056 screw securing connector bracket to left side frame.

④ Disengage ears of pan from left and right side frames and remove pan.

② Remove two 184056 screws from left and right side frame tabs.

NOTE: Connector bracket along with connector will be attached to pan. At this moment, slip grommet with connector cable off of pan.

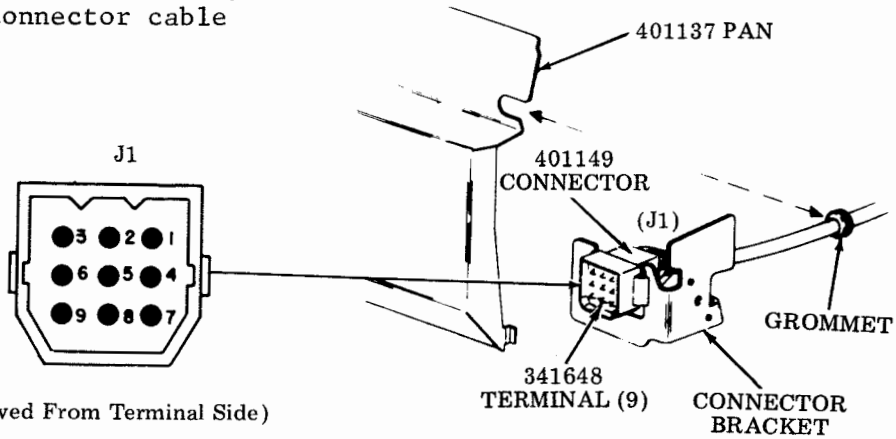

410055 Interface and Bell Card

CAUTION 1: DURING REASSEMBLY, CAREFULLY SEAT PINS OF CIRCUIT CARD INTO RECEPTACLES BEFORE APPLYING PRESSURE.

CAUTION 2: DURING ASSEMBLY AND REASSEMBLY, AVOID HANDLING OF CRYSTAL IN TUNED HOLDER, AS DAMAGE MAY OCCUR.

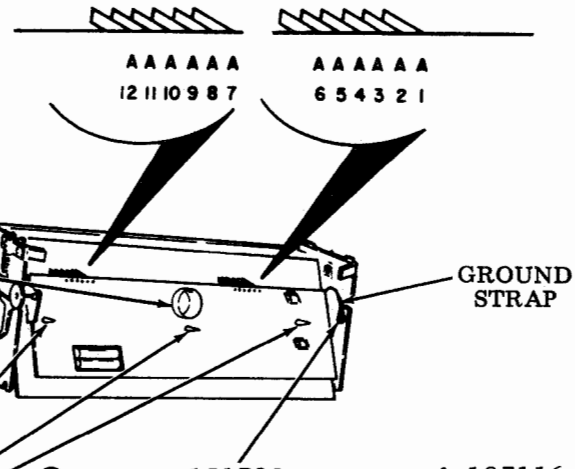

② Using long-nose pliers, compress the three locking tabs on the plastic standoffs one at a time while applying upward pressure to circuit card, and remove card.

① Remove 151722 screw and 107116 lockwasher securing ground strap to left side frame.

Spacebar Mechanism

① Remove cover.

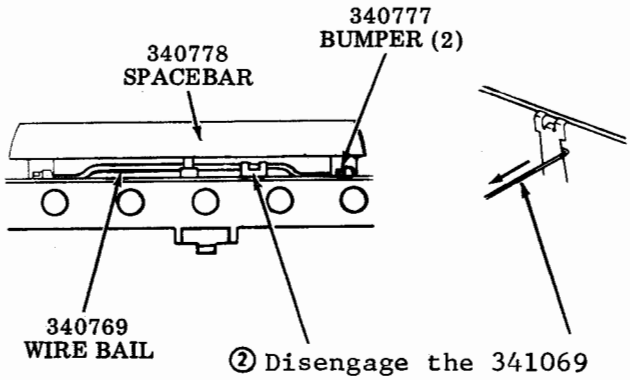

② Disengage the 341069 leaf spring (bronze colored) from the wire bail using a spring hook and pull towards the front.

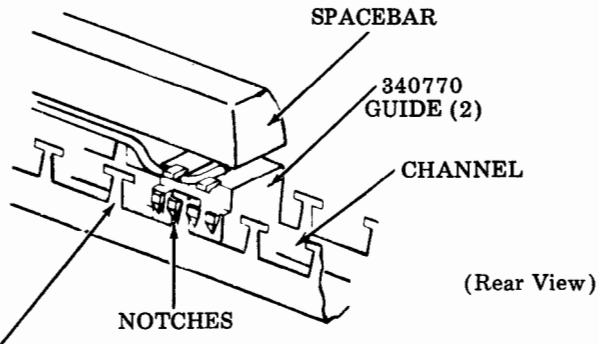

③ Disengage the two rear tines (one at each end of spacebar) with a small screwdriver while pulling the spacebar up and toward the front.

④ Continue applying upward pressure to the spacebar and disengage the two front tines.

E. OPERATOR CONSOLES (Cont)

4. DISASSEMBLY PROCEDURES -- KD-KDP OPCON (40K101/CAK), Spacebar Mechanism (Cont)

In reassembly, make sure the four tines engage the notches in the spacebar housing and the leaf spring is engaged to the wire bail.

Check mechanical operation of the spacebar so that it returns to its unoperated position freely when depressed and released slowly.

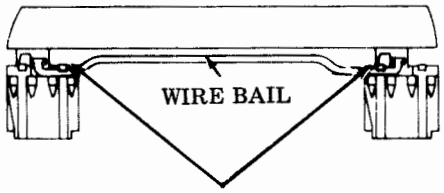

⑤ Remove the wire bail from the left and right spacebar guides (snaps in and out).

Keytop Removal

To remove data keytops, place 346260 tool over the keytop and pull up to remove.

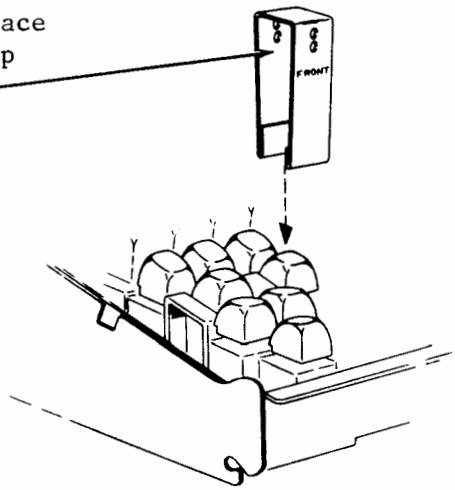

CAUTION: THE CAPS LOCK KEYTOP MUST BE IN THE FULLY EXTENDED, UNLATCHED POSITION BEFORE ATTEMPTING TO REMOVE THE KEYTOP. FAILURE TO OBSERVE THIS PRECAUTION WILL RESULT IN A DAMAGED KEYSWITCH.

To remove control keytops and blocking keytops:

① Grasp keytop using thumb and index finger.
② Exert upward force until keytop releases.

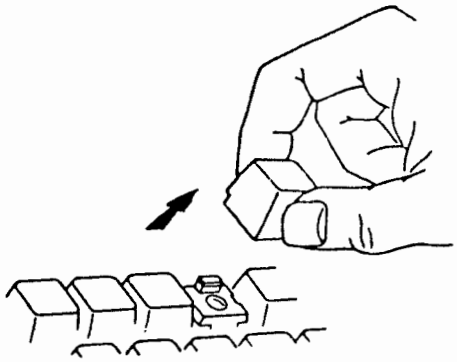

In reassembly of the blocking keytop for the CAPS LOCK switch only, operate the switch to the latched (down) position. For all other blocking keytops, position keytop over switch housing and snap down until ridges are retained by notches in switch body.

CAUTION: CONTROL ROW BLOCKING KEYTOPS ARE NOT THE SAME ON THE FRONT AND REAR SIDE AND MUST BE ASSEMBLED WITH THE PROPER ORIENTATION.

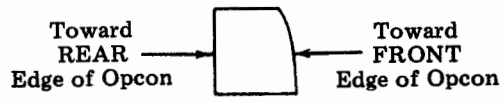

Profile of Control Row Blocking Keytop

Keyswitch Removal

① Remove cover.
② Remove pan.
③ Remove interface circuit card.
④ Remove keytop.

⑤ Remove solder from around terminal pins of keyswitch to be removed.

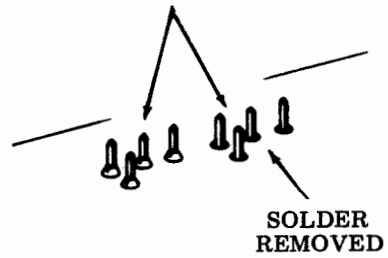

CAUTION: USE A LOW WATTAGE SOLDERING IRON (AVOID PROLONGED CONTACT WITH PINS) ALONG WITH A DESOLDERING TOOL TO PREVENT DAMAGE TO KEYSWITCH CARD, CIRCUITS AND COMPONENTS.

⑥ Place 346257 tool over the keyswitch and press downward. When the tool bottoms and embossed projections snap into notches on keyswitch, squeeze and pull back on the tool to lift keyswitch out.

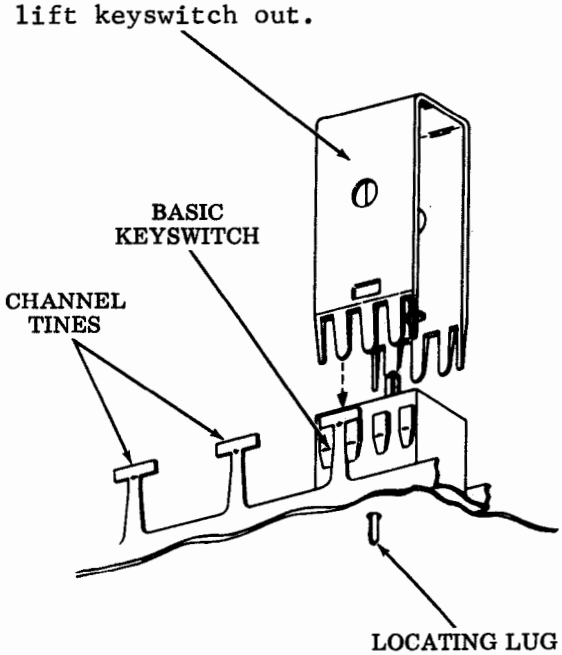

NOTE: The tines of the tool must pass between the keyswitch housing and the inside of the tines on the channel.

In reassembly, insert new keyswitch, observe position of locating lug, and press keyswitch into channel. Switch must snap fully into front and rear channel tines. Hold keyswitch in place and resolder.

E. OPERATOR CONSOLES (Cont)

4. DISASSEMBLY PROCEDURES -- KD-KDP OPCON (40K101/CAK) (Cont)

Test Indicator Removal

① Remove cover.
② Remove pan.

CAUTION: USE A LOW WATTAGE SOLDERING IRON (AVOID PROLONGED CONTACT WITH PINS) ALONG WITH A DESOLDERING TOOL TO PREVENT DAMAGE TO KEYSWITCH CARD CIRCUITS AND COMPONENTS.

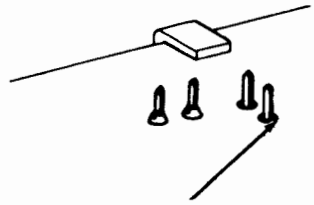

③ Locate two indicator terminals and remove solder from around terminal pins.

④ Place 346257 tool over the indicator housing and press downward. When the tool bottoms and embossed projections snap into notches on indicator housing, squeeze and pull back on the tool to lift indicator out.

NOTE: The tines of the tool must pass between the indicator housing and the inside of the tines on the channel.

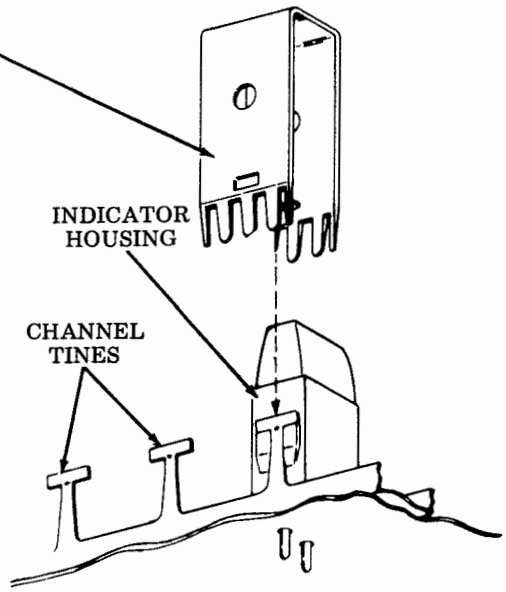

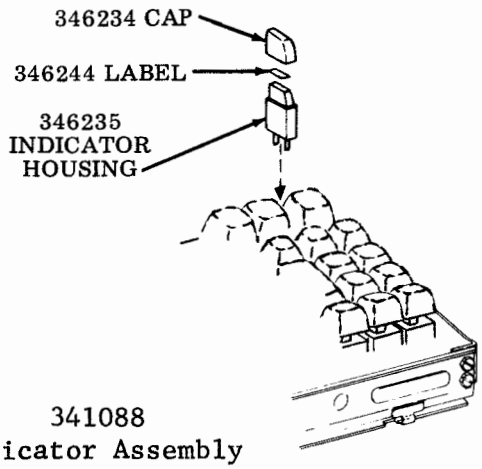

341088
Indicator Assembly
Parts Identification

In reassembly, insert new indicator assembly into position; press into channel. Switch must snap fully into front and rear channel tines. Hold indicator assembly in place and resolder.

5. KEYSWITCH AND KEYTOP IDENTIFICATION -- KD-KDP OPCON

Keytop Identification

TP PART NO.	KEYTOP DESCR	TP PART NO.	KEYTOP DESCR	TP PART NO.	KEYTOP DESCR
**340701	BLOCKING (Control)	340850	↑	340887	SUB U
**340714	BLOCKING (Data)	340852	SOH A	340888	TAB
*340767	NEW LINE	340853	DC3 S	340889	] +
340818	HOME	340854	EOT D	340890	[=
**340819	SCROL UP	340856	BEL G	340891	RETURN
340821	! 1	340857	GS H	340892	} {
340822	@ 2	340858	RS J		NK
340823	# 3	340859	VT K	340893	¦ \
340824	$ 4	340860	FF L		AK
340825	% 5	340861	: ;	** 340894	CAPS LOCK
340826	^ 6	340862	" /	** 340895	SEGMT ADV
340827	& 7	340863	LINE DLETE	340896	~ `
340828	* 8	340865	←		SY
340829	(9	340866	→	340897	DLE F
340830	) 0	340867	SHIFT	** 340898	CURSOR TAB(Wide)
				340900	1/8 1
				340901	1/4 2
				340902	3/8 6
				340903	1/2 8
				340904	5/8 -
				340905	3/4 +
340831		340868	NUL Z	346100	SEND
340835	CURSR RETURN	340869	CAN X	346101	REC
**340836	SCROL DOWN	340870	ETX C	346102	LOCAL
**340837	CURSR TAB	340871	DEL V	** 346103	S/R
340838	DC1 Q	340872	STX B	** 346104	PRINT ON LINE
340839	ETB W	340873	SO N	** 346105	PRINT LOCAL
340840	ENQ E	340874	FS M	** 346106	INTRPT
340841	DC2 R	340875	< ,	** 346107	HIGH LIGHT
340842	DC4 T	340876	> .	** 346108	FORM ENTER
340843	EM Y	340877	? /	** 346110	TAB SET
340845	US I	340879	↓	** 346111	TAB CLEAR
340846	S1 O	340880	CONTROL	346114	CLEAR
340847	ESC P	340881	CHAR INSRT	** 346121	FORM SEND
340849	LINE INSRT	340882	CHAR DLETE	** 346122	REC TAPE
				** 346259	BLOCKING (Wide Cursor Tab)

*The 340764 compression spring between the 340767 keytop and the housing must be ordered separately.

**Keytops used in conversions.

Keyswitch Identification

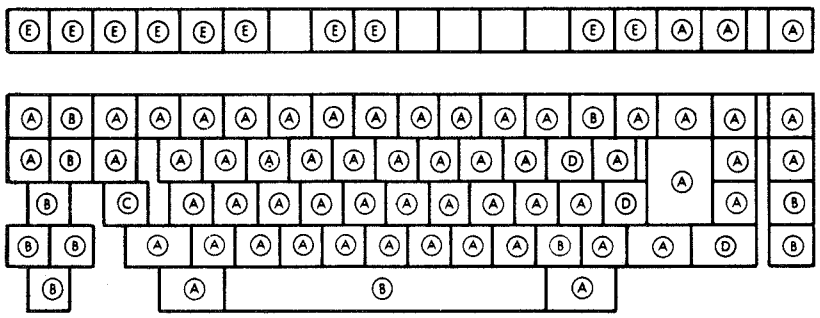

SWITCH NO.	TYPES	PUSH ROD COLOR
Ⓐ340720	BASIC	WHITE
Ⓑ340721	REPEAT	GREEN
Ⓒ340722	LATCHING	BLUE
Ⓓ341097	COMBINATION	YELLOW
Ⓔ346211	INDICATOR	ORANGE

NOTE: On early units, keyswitch part number is stamped on housing.

E. OPERATOR CONSOLES (Cont)

5. KEYSWITCH AND KEYTOP IDENTIFICATION -- KD-KDP OPCON (40K101/CAK) (Cont)

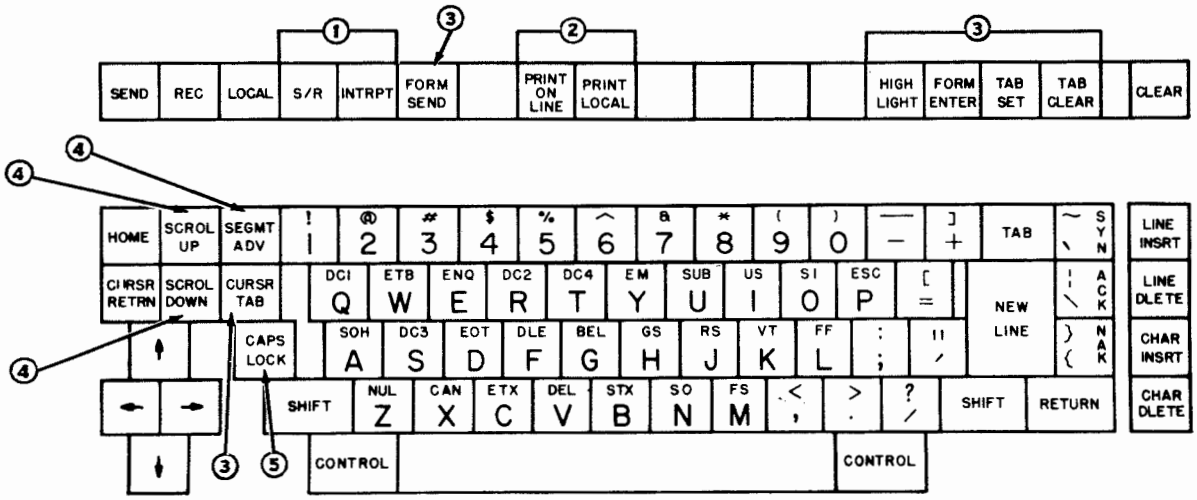

① Keytops present for S/R (conversation mode) (see Note 1).

② Keytops present when terminal is equipped with page printer (see Notes 1 and 2).

③ Keytops are present only if terminal has full edit feature (see Note 1).

④ Keytops present only if terminal has 48 or 72 line display memory (see Note 1).

⑤ If CAPS LOCK keytop is not present, keyswitch plunger is latched (down) for monocase -- all caps -- operation; blocking type keytop is installed over switch housing. First depression latches keyswitch (down); second depression unlatches keyswitch (up).

CAUTION: IF KEYTOP IS PRESENT AND REMOVAL IS REQUIRED, DO NOT REMOVE KEYTOP FROM SWITCH SHAFT UNLESS SWITCH PLUNGER IS OPERATED INTO UNLATCHED UP POSITION.

NOTE 1: If keytop is not provided within console arrangement, a blocking type keytop (unmarked) is installed over housing of keyswitch. Keytops are not present under blocking cap.

NOTE 2: Some console arrangements may have the PRINT ON LINE and PRINT LOCAL keytops replaced by BLOCKING keytops.

Keytops Peculiar to Arrangements With Fractions

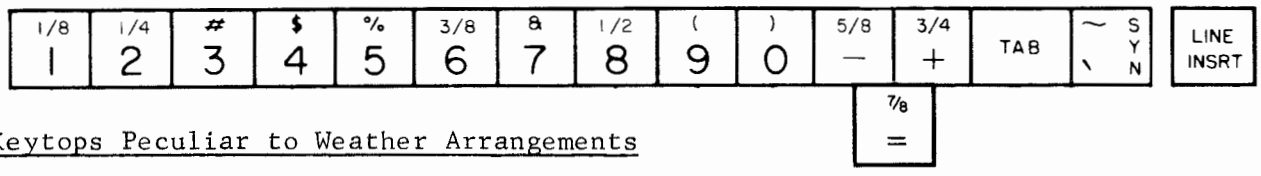

Keytops Peculiar to Weather Arrangements

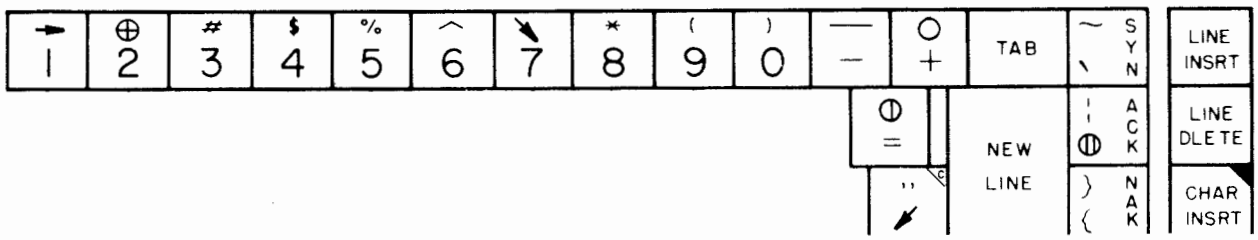

6. SUBASSEMBLY IDENTIFICATION -- RO OPCON (40K001/AAA)

Major Parts Identification for RO Opcon

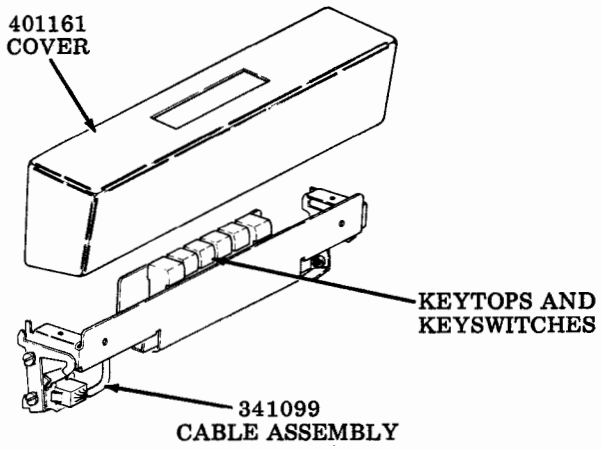

7. DISASSEMBLY PROCEDURES -- RO OPCON

Cover Removal

Remove two 184056 screws w/lockwashers mounting cover to keyswitch bracket.

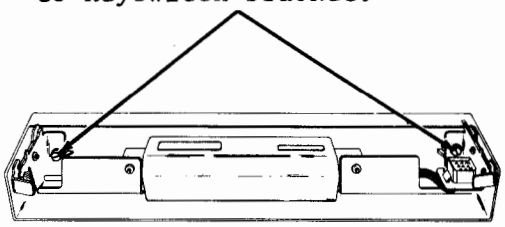

Keytop Removal

① Grasp keytop using thumb and index finger.
② Exert upward force until keytop releases.

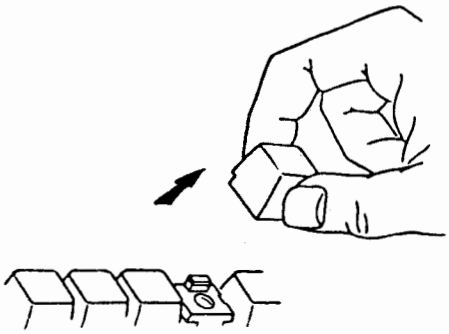

CAUTION: BLOCKING KEYTOPS ARE NOT THE SAME ON THE FRONT AND REAR SIDE AND MUST BE ASSEMBLED WITH THE PROPER ORIENTATION.

In reassembly of blocking keytops, position blocking keytop over switch housing until ridges are retained by notches in switch body.

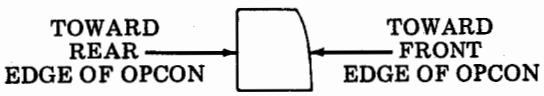

Profile of Blocking Keytop

E. OPERATOR CONSOLES (Cont)

7. DISASSEMBLY PROCEDURES -- RO OPCON (Cont)

Keyswitch Removal

① Remove cover.
② Remove keytop.

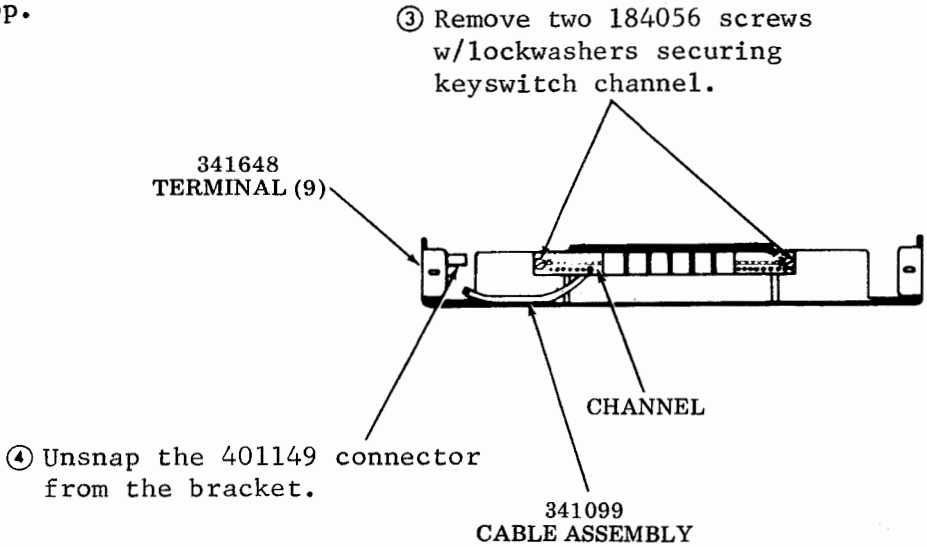

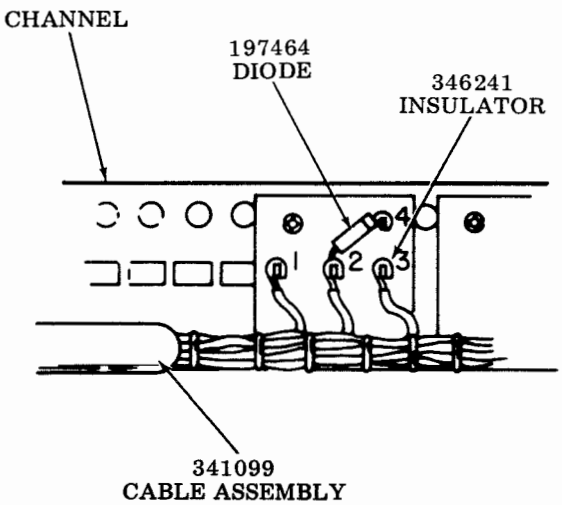

⑤ Remove solder from terminal pins securing cable leads and jumpers, and remove insulator.

CAUTION: USE A LOW WATTAGE (AVOID PROLONGED CONTACT WITH PINS) SOLDERING IRON ALONG WITH A DESOLDERING TOOL TO PREVENT DAMAGE TO CABLE LEADS.

⑥ Place 346257 tool over the keyswitch and press downward. When the tool bottoms and embossed projections snap into notches on keyswitch, squeeze and pull back on tool to lift keyswitch out.

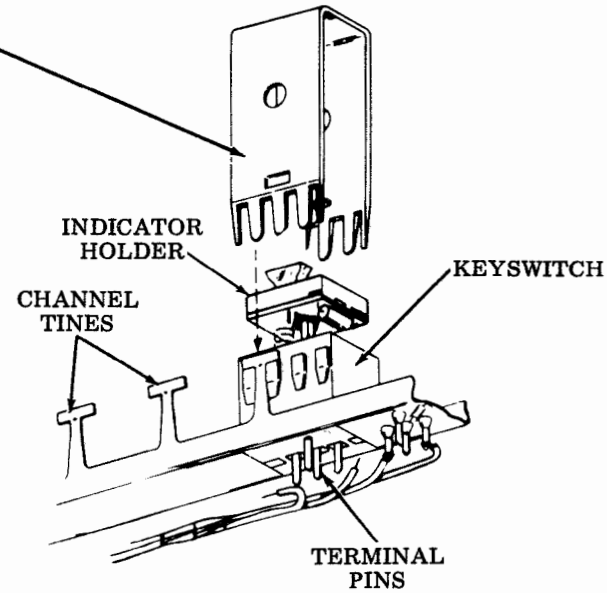

NOTE: The tines of the tool must pass between the keyswitch housing and the inside of the tines on the channel.

In reassembly, insert new keyswitch, observe position of locating lug, and press keyswitch into channel. Switch must snap fully into front and rear channel tines. Before resoldering, replace insulator, hold keyswitch in place and resolder.

8. KEYSWITCH AND KEYTOP IDENTIFICATION -- RO OPCON

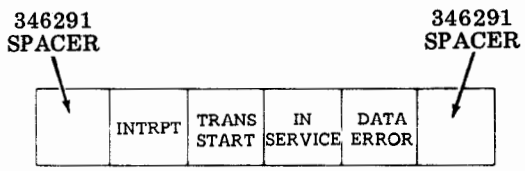

Keyswitch Identification

KEYTOP DESCR	TP SWITCH NO.	INDICATOR HOLDER COLOR
INTRPT	346213	LIGHT GRAY
TRANS START	346212	WHITE
IN SERVICE	346212	WHITE
DATA ERROR	346213	LIGHT GRAY

NOTE: On early units, keyswitch part number is stamped on housing.

Keytop Identification

TP PART NO.	KEYTOP DESCR
* 340701	BLOCKING
346106	INTRPT
* 346115	TRANS START
346113	IN SERVICE
* 346119	DATA ERROR

*Keytops Used in Conversions

F. RO CONTROLLER (40C103/AD OR 40C103/AE)

To disassemble the controller, refer to procedure shown. Circled numbers indicate order of disassembly.

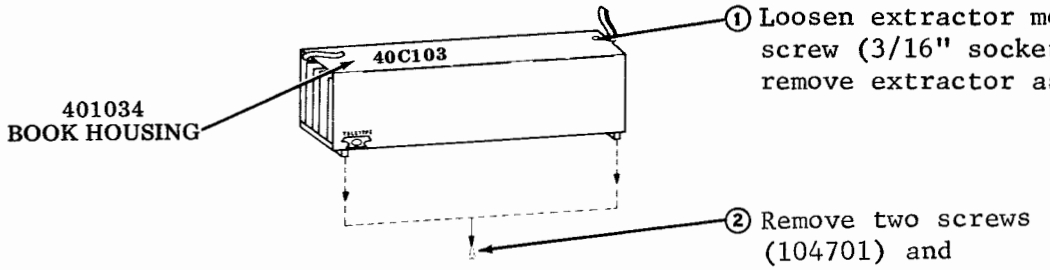

① Loosen extractor mounting screw (3/16" socket) and remove extractor assembly.

② Remove two screws (104701) and housing feet (401035).

③ Remove card tray.

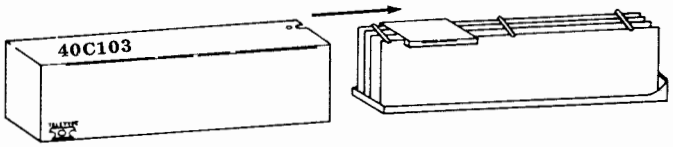

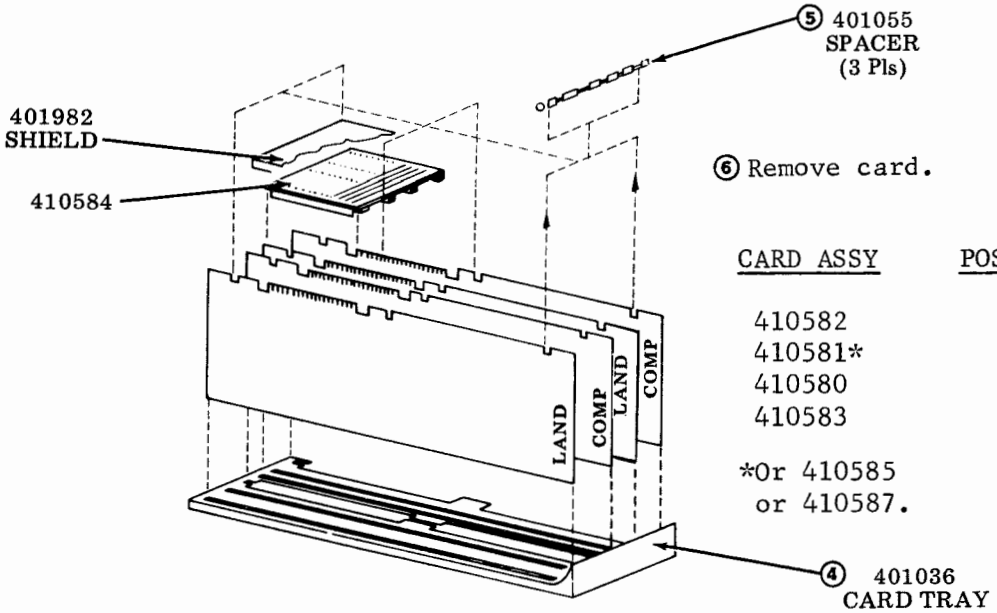

⑤ 401055 SPACER (3 Pls)

⑥ Remove card.

CARD ASSY	POSITION
410582	JA
410581*	JB
410580	JC
410583	JD

*Or 410585 or 410587.

*NOTE: 410581 and 410585 are interchangeable and are used in 40C103/AD. 410587 used in 40C103/AE.

It is not intended that the extractor assembly be disassembled for access to the controller cards.

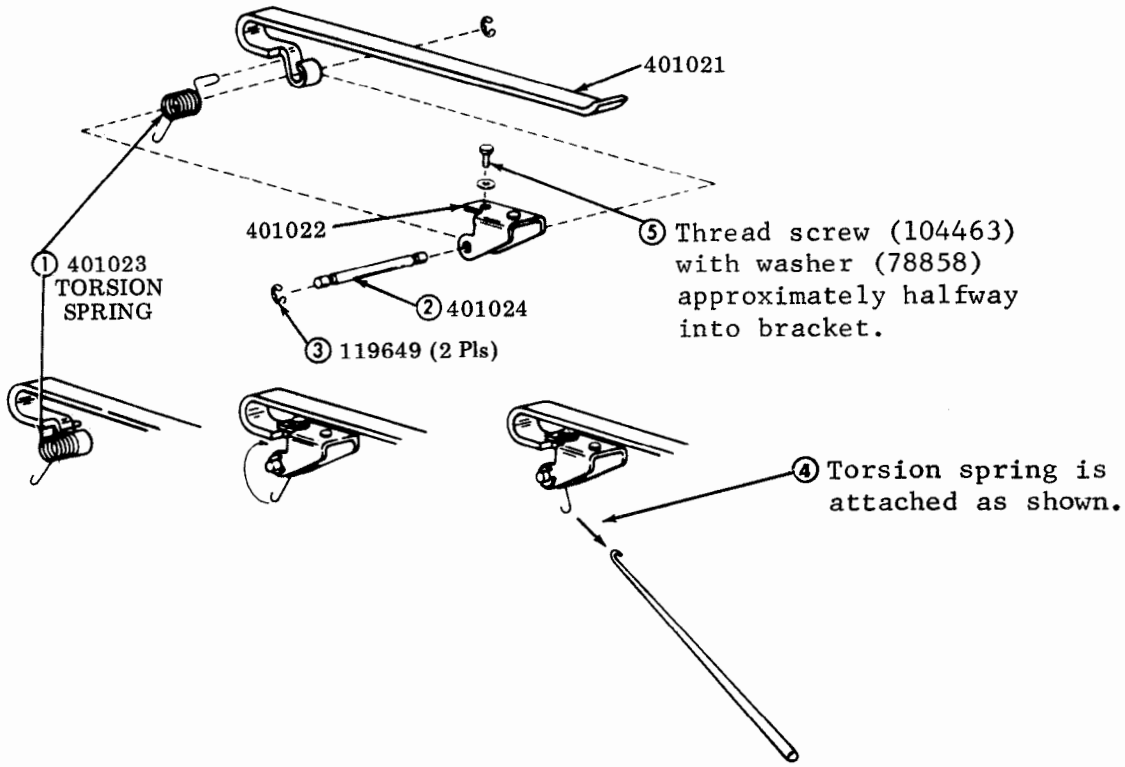

G. PRINTER

1. FRICTION FEED

Removal and Replacement of Entire Printer Assembly

NOTE: The 410640 circuit card can be removed when printer is in maintenance position.

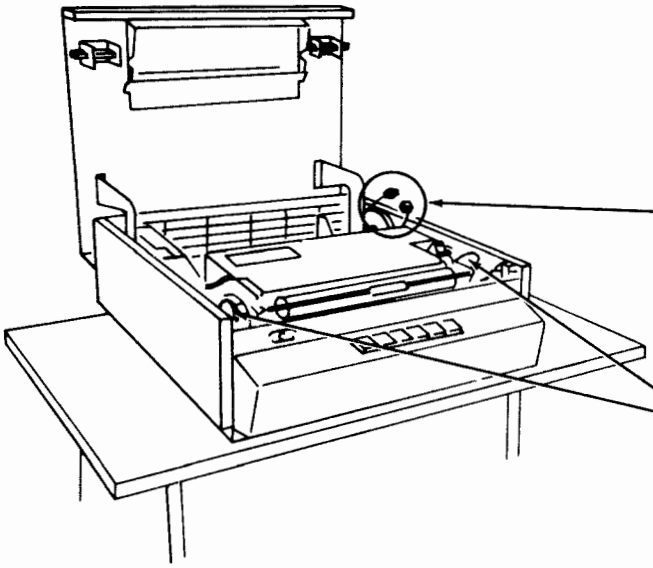

① Open cover.
② Disconnect interlock cable connector P106.
③ Remove paper roll.
④ Release printer to tilt position by depressing left and right release levers.

⑦ Release (push in) printer slide detents and pull printer out by grasping it by the frame (front bottom).

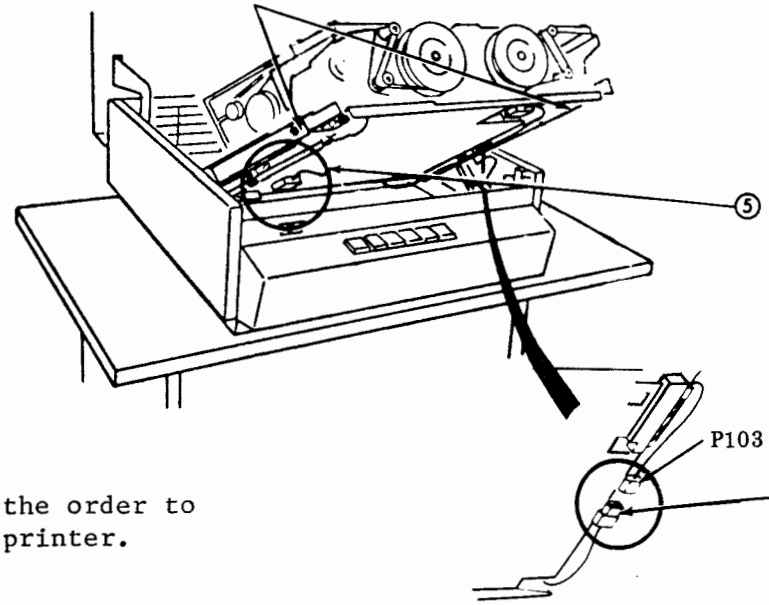

⑤ Disconnect 115 V ac connector J100.

⑥ Disconnect SSI cable from printer cable.

⑧ Reverse the order to install printer.

Printer Subassembly Identification

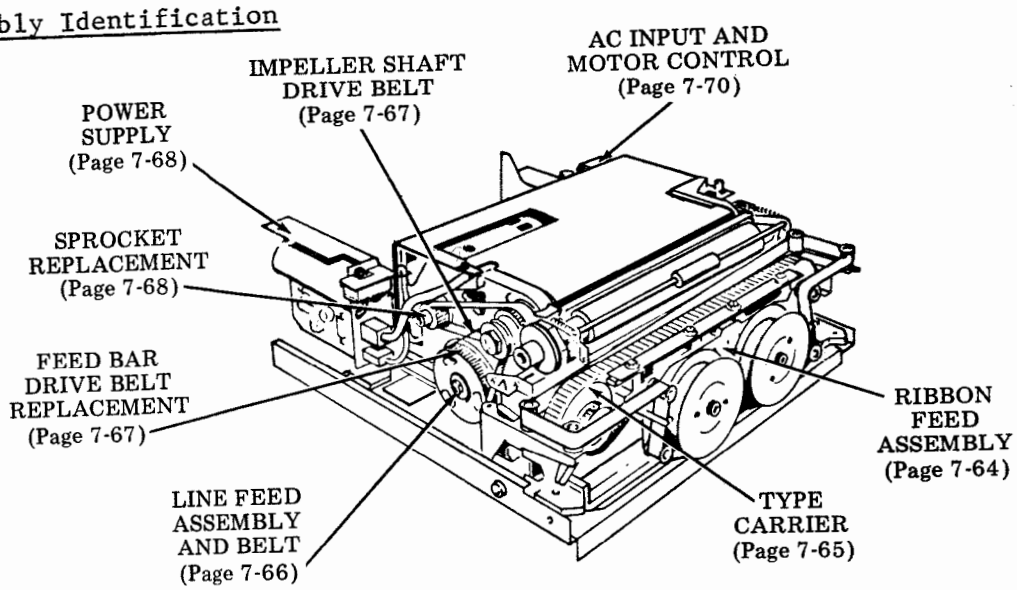

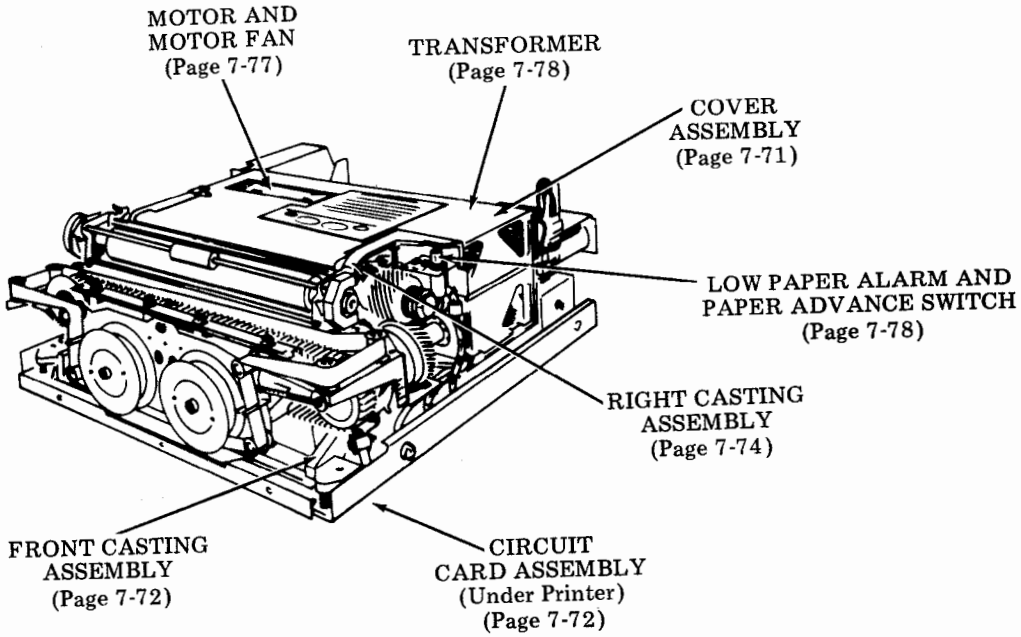

NOTE: To remove a subassembly, go to the page referenced.

G. PRINTER (Cont)

1. FRICTION FEED (Cont)

Ribbon Feed Assembly (402420)

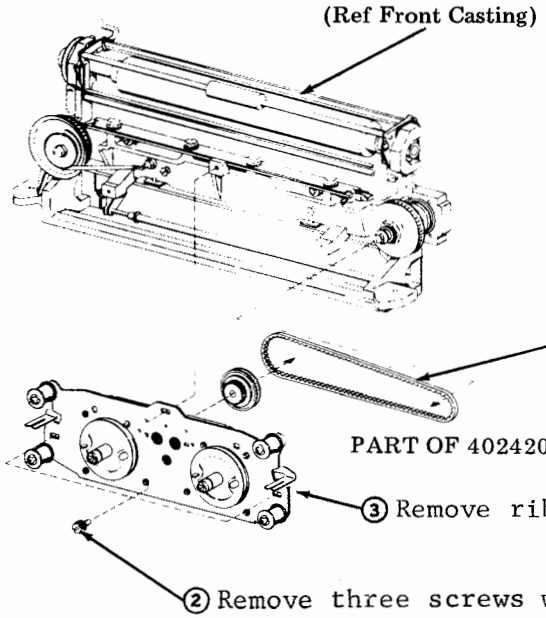

① Remove ribbon (402444 -- not shown).

④ Slide ribbon feed assembly to right to remove belt (400630).

⑤ Move assembly to left to clear right pulley and remove.

③ Remove ribbon feed assembly (402420).

② Remove three screws w/lockwashers (184056).

In reassembly, perform the Ribbon Feed Drive Belt Tension adjustment.

Spring replacement:

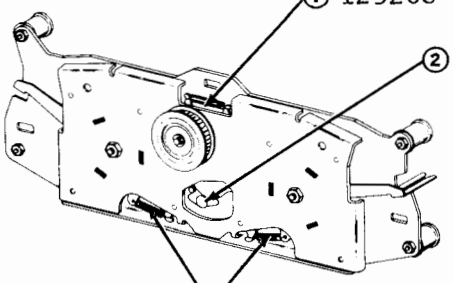

① 125268 spring.

② 400420 torsion spring.

③ 2836 sensing arm spring.

(Rear View)

Roller replacement:

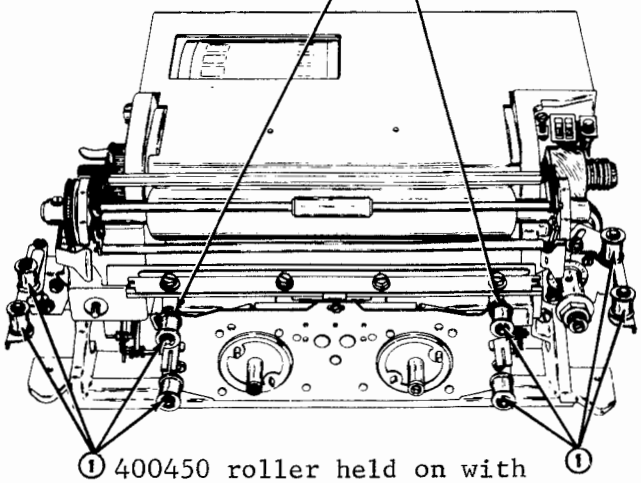

② 2247 flat washer behind roller on early design units.

① 400450 roller held on with 119651 retainer ring.

Type Carrier (400645 -- Monocase/400629 -- Up-Low)

③ Loosen thumbscrew on right ribbon guide bracket and swing guide to right.

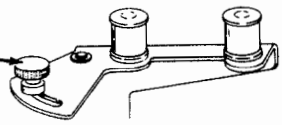

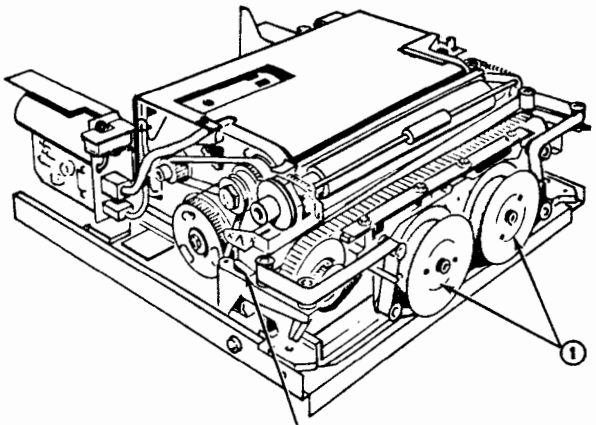

① Remove ribbon (402444).

② Release thumb lever on left ribbon guide bracket allowing guide to spring to left.

④ Lift up arm on left type carrier pulley to release spring bias on pulley. While holding arm up, lift type carrier from right pulley and remove.

CAUTION: WHEN REPLACING THE TYPE CARRIER, PLACE THE CARRIER ON THE LEFT PULLEY FIRST AND MAKE SURE ALL THE PALLET STEMS AT THE TOP OF THE BELT ARE LOCATED UNDER THE BACKUP BAR.

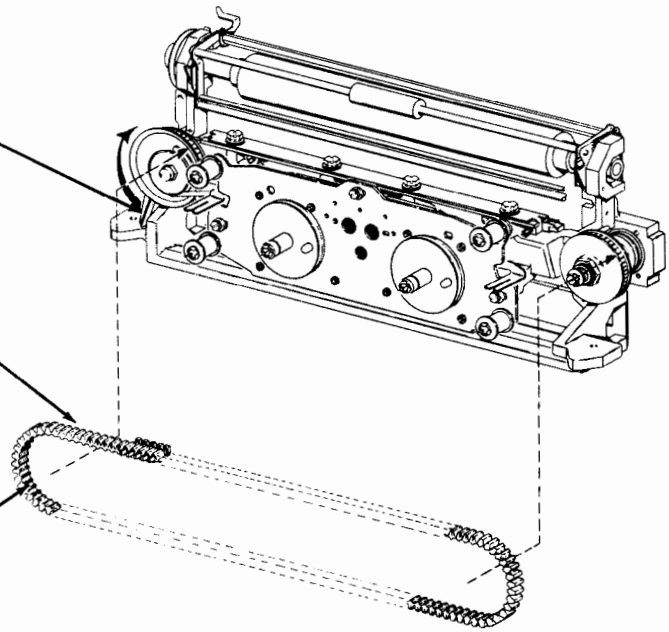

G. PRINTER (Cont)

1. FRICTION FEED (Cont)

Line Feed Assembly and Belt (400470)

- Remove 410640 circuit card (Page 7-72).
- Cut the nylon strap securing line feed magnet cable to bottom pan.

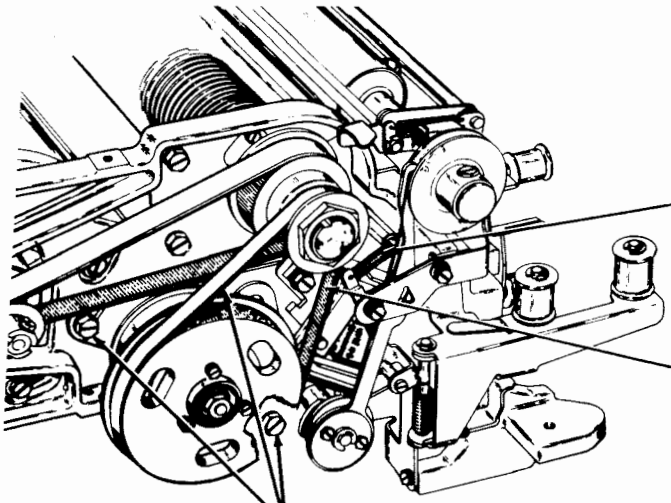

② Remove spring (41385) from threaded post (400317).

① Slide clutch drive belt (400634) off. Replace if worn.

③ Remove one screw (153442), three lockwashers (45815), three flat washers (41663), and two screws (173974).

④ Carefully separate line feed assembly, (400470) from casting. Do not move line feed assembly too far away from printer. Move assembly just enough to disconnect two wires attached to coil, and then remove assembly.

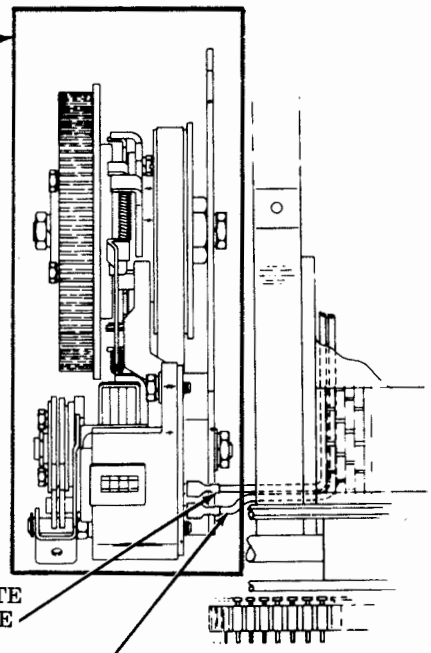

NOTE: When reassembling, connect red wire to front terminal of magnet; slate wire to rear terminal (as viewed from front of printer). Replace cable tie cut in disassembly.

In reassembly, perform the Clutch Drive Belt Tension adjustment.

Feed Bar Drive Belt Replacement (400632)

Remove line feed assembly and belt (see Page 7-66 first).

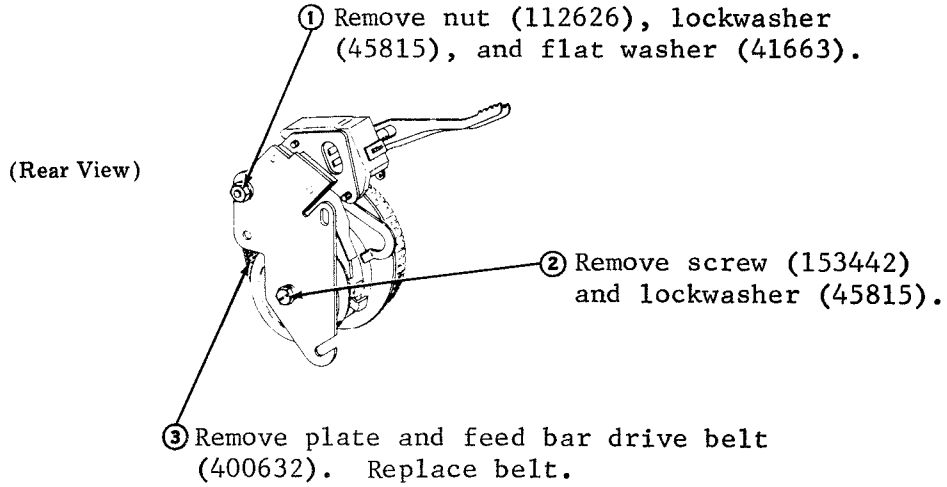

In reassembly, perform the Feed Bar Drive Belt Tension adjustment, then perform the Clutch Drive Belt Tension adjustment. If the feed bar drive belt is replaced, also perform the Line Feed Eccentric adjustment.

Impeller Shaft Drive Belt Replacement (400631)

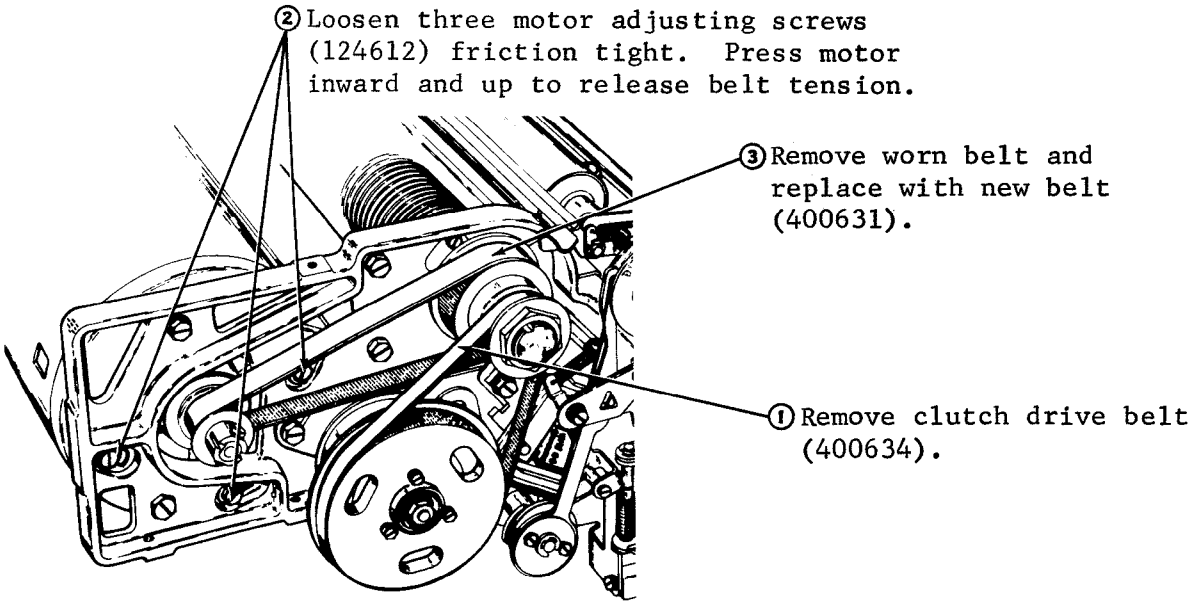

In reassembly, perform the Impeller Shaft Drive Belt Tension adjustment. Check the Clutch Drive Belt Tension adjustment.

G. PRINTER (Cont)

1. FRICTION FEED (Cont)

Sprocket Replacement

60 Hz to 50 Hz and 50 Hz to 60 Hz Conversions:

NOTE 1: Only those printers equipped with 402402 motors and 402632 ac input and motor control assemblies are capable of operation on either a 50 or 60 Hz 117 V ac source. Conversion is accomplished by installing the proper sprocket on the motor shaft, 400280 for 60 Hz, 400282 for 50 Hz.

NOTE 2: Early printers equipped with either the 400905 or 400960 ac input and motor control assembly and the 400270 motor (60 Hz only) may be updated for 50 Hz or 60 Hz operation with the 402633 modification kit and the 400282 sprocket.

- Remove impeller shaft drive belt first.

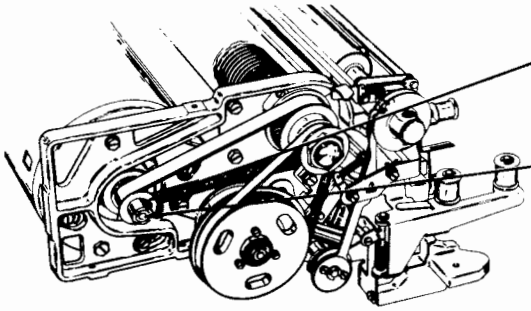

① Remove screw (153841), lockwasher (2191), and nut (3598) from sprocket (400280). Remove sprocket.

② Replace with new sprocket.

In reassembly, perform the adjustments mentioned on Page 7-66 and 7-77.

Power Supply Assembly (400908)

① Unplug two connectors at the front of power supply.

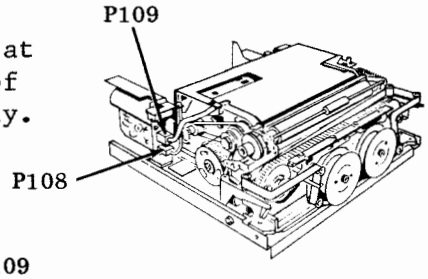

NOTE: Removal of the 410681 or 410150 circuit card does not require disassembly of the power supply.

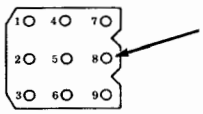

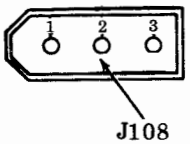

② Remove screws (153484) and lockwashers (107116) from terminals 1 (WHITE-BLUE lead) and 3 (WHITE-BLACK lead) on relay.

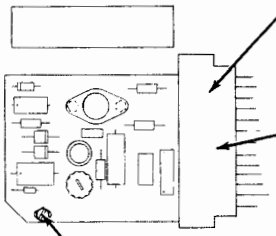

② Slide card out of connector J111.

① Remove circuit card mounting screw.

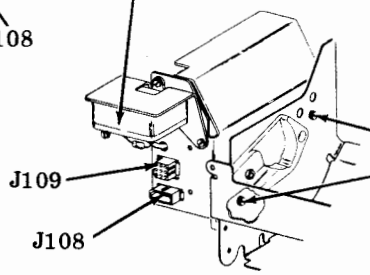

③ Remove two screws w/lockwashers (184056). Remove power supply assembly (400908) and replace.

In reassembly, make sure the WHITE-BLACK lead is on the 3 terminal and WHITE-BLUE is on the 1 terminal.

AC Input and Motor Control Assembly

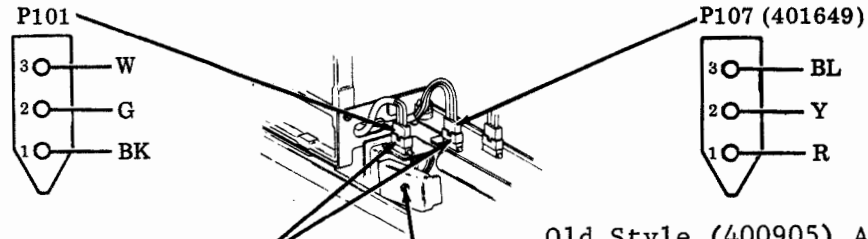

① Remove connectors.

Old Style (400905) AC Input and Motor Control Assembly

② Remove screw w/lockwasher (181241) from relay cover. Remove cover.

Motor Control Relay

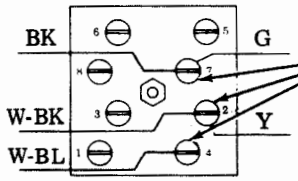

③ Remove screws (153484) from motor control relay at terminals 4, 2, and 7 to disconnect leads.

Late Design Printer — 143306
Early Design Printer — 120166

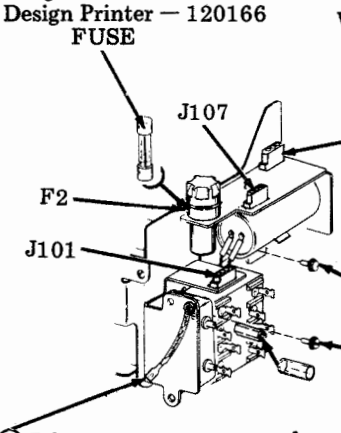

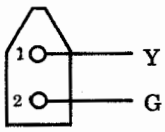

④ Remove screw (151631), lockwasher (2191), and flat washer (7002) from cable clamp to loosen cable.

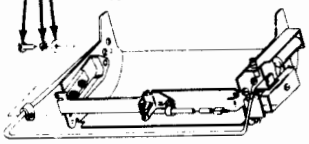

⑤ Disconnect ground strap at motor control assembly; do not disconnect strap from printer base.

⑥ Remove screw w/lockwasher (184055) securing motor control assembly (400905) to paper container. Remove assembly.

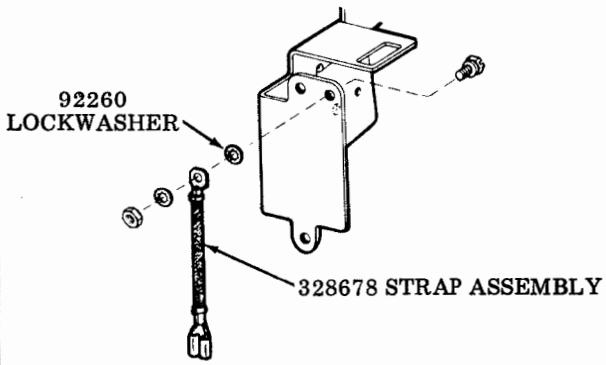

Early Design Grounding Parts

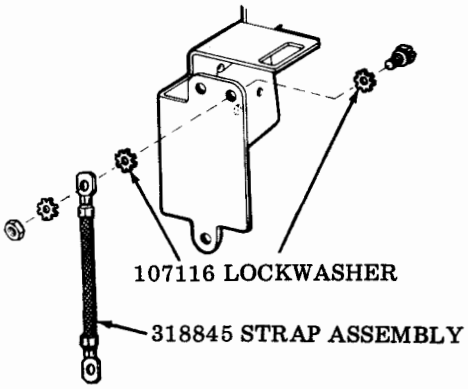

Late Design Grounding Parts

In reassembly, make sure that the right color leads are mounted to the proper terminals on the relay, and the right connectors are mounted to their receptacles.

NOTE: If it becomes necessary to replace the old style motor control 400905, order 402618 modification kit.

G. PRINTER (Cont)

1. FRICTION FEED (Cont)

400960 AC Input and Motor Control Assembly

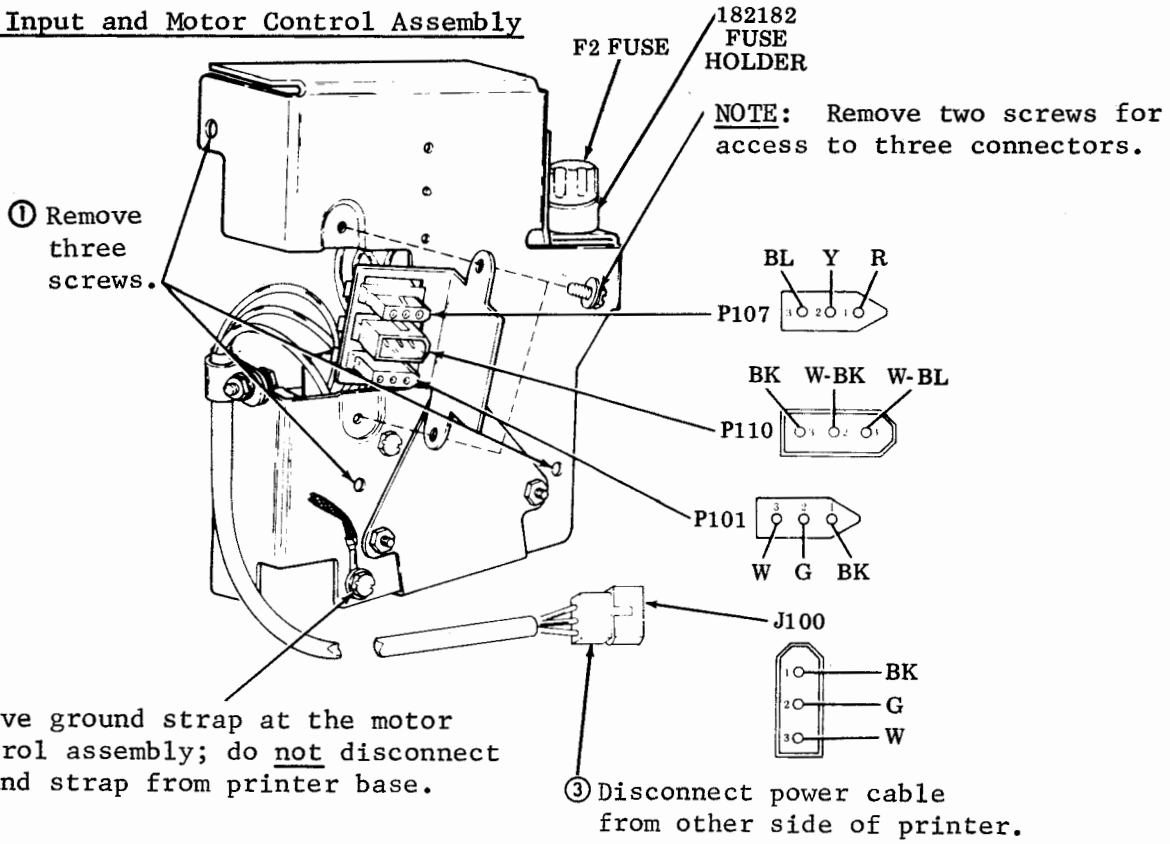

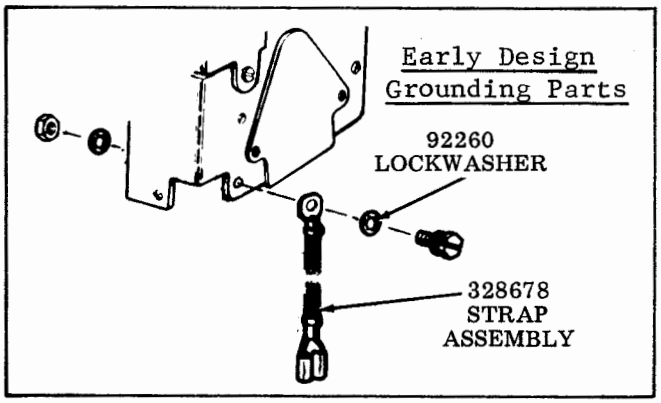

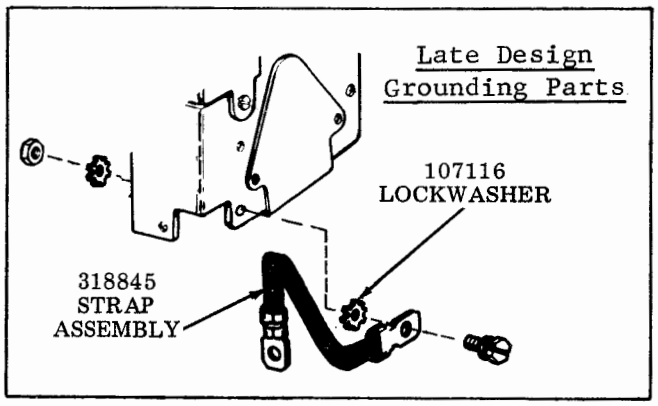

CAUTION: SEVERAL MOTORS AND AC INPUT AND MOTOR CONTROL ASSEMBLIES HAVE BEEN USED IN FRICTION FEED PRINTERS. THE MOTORS AND AC INPUT AND MOTOR CONTROL ASSEMBLIES ARE NOT INTERCHANGEABLE.

	Old Design*	Intermediate Design	Late Design
Motor	400270	400270	402402
AC Input and Motor Control Assembly	400905	400960	402632

*Install 402618 modification kit to upgrade to intermediate design.

Cover Assembly (400903)

① Remove the four screws w/lock-washers (184057) and the clamp (400586) that secure the cover to the castings.

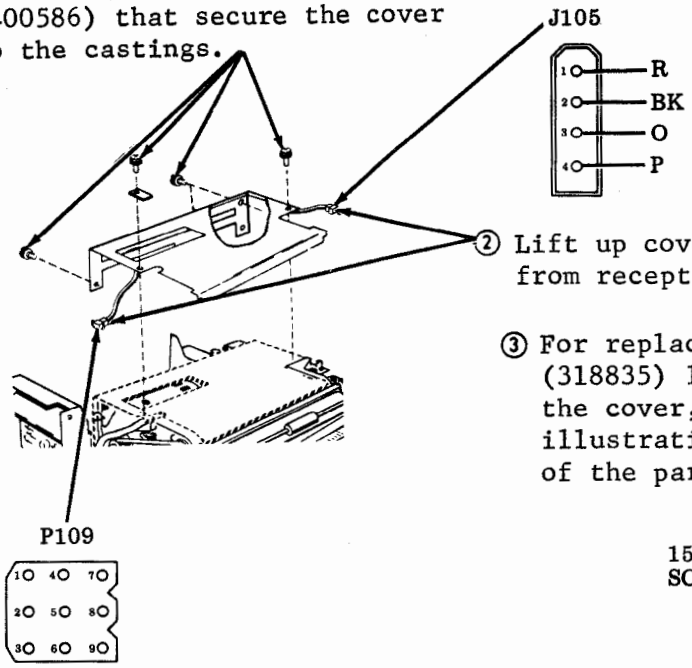

② Lift up cover and unplug connectors from receptacles. Remove cover.

③ For replacement of the transistor (318835) located on the back of the cover, use the following illustration, and note location of the parts.

In reassembly, make sure all wires are mounted and thermal compound (402640) is applied to the bases of the insulator and transistor.

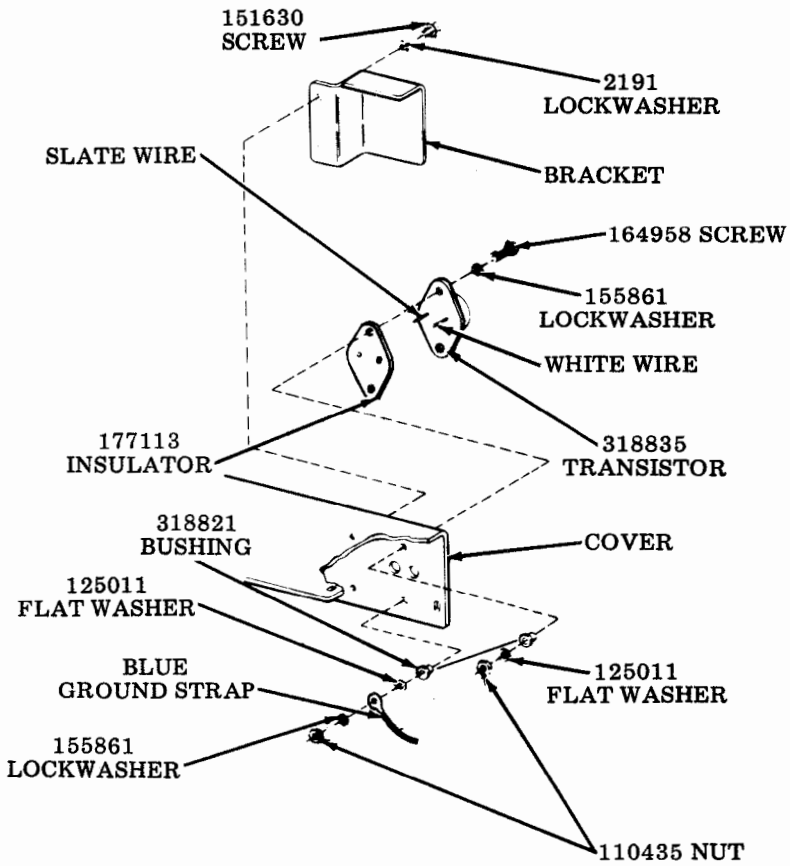

G. PRINTER (Cont)

1. FRICTION FEED (Cont)

Circuit Card Assembly (410640)

NOTE: Service personnel should wear 346392 protective ground strap for this procedure.

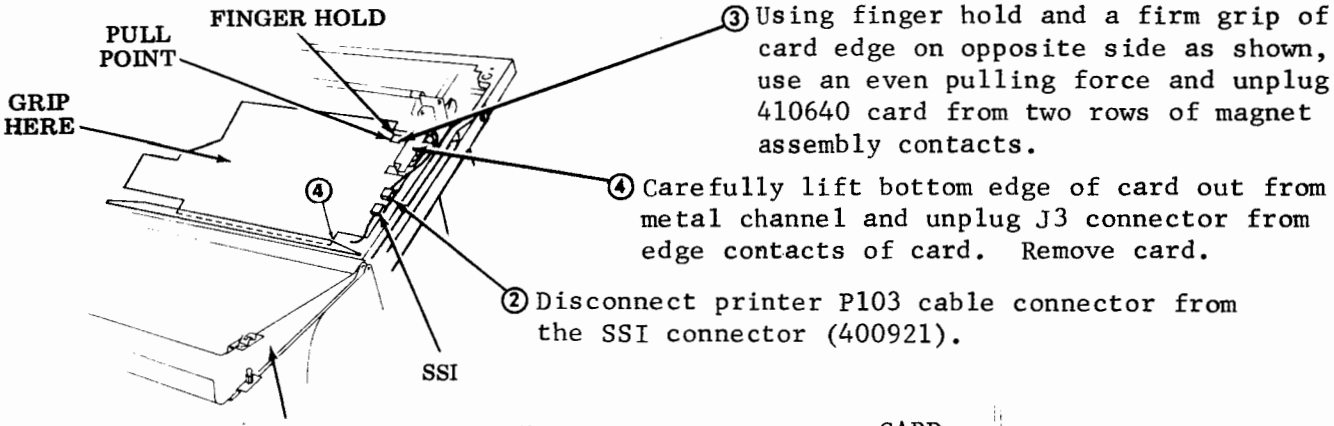

③ Using finger hold and a firm grip of card edge on opposite side as shown, use an even pulling force and unplug 410640 card from two rows of magnet assembly contacts.

④ Carefully lift bottom edge of card out from metal channel and unplug J3 connector from edge contacts of card. Remove card.

② Disconnect printer P103 cable connector from the SSI connector (400921).

① With the printer in the "ribbon changing or maintenance position", remove two screws that secure paper chute to bottom of printer and allow the chute to hinge down.

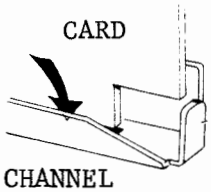

NOTE 1: During reassembly, make certain that the J3 connector is plugged onto the card and that the card is located within the channel before plugging it into the two rows of magnet assembly contacts. Apply slight pressure at both ends and middle of card to fully seat it on magnet contacts.

NOTE 2: If a new 410640 card is replaced, perform the Impeller Shaft Sensor and the Flag Sensor adjustment after card is mounted in printer.

Front Casting Assembly (400201)

Remove type carrier -- see Page 7-65.

Remove circuit card -- see Page 7-72.

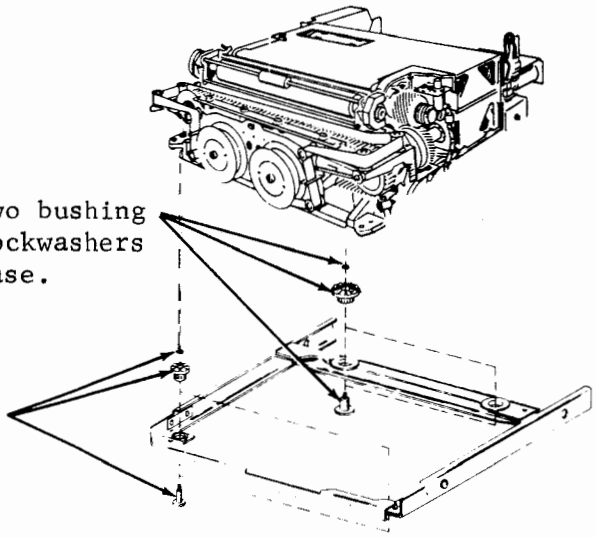

② Remove two screws (400406), two bushing isolators (400402), and two lockwashers (2669) from rear of printer base. Remove base.

① Remove two screws (400405), two bushing isolators (338728), and two lockwashers (3646) from front of printer base.

Front Casting Assembly (400201)

③ Unhook spring (41385) from post on line feed assembly to disengage pawls.

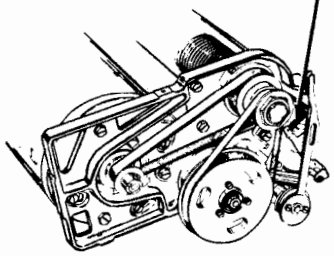

• To gain access to front mounting screws, it is necessary to remove left and right ribbon guides.

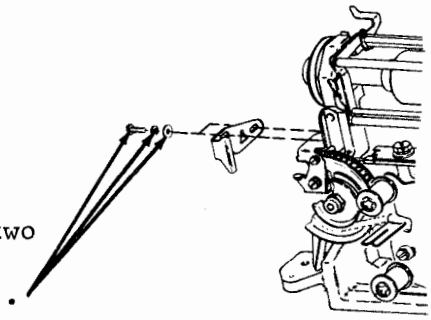

④ To remove left ribbon guide, remove two screws (151637), two lockwashers (3640), and two flat washers (125011).

⑤ To remove right ribbon guide, remove screw (151637), lockwasher (3640), and flat washer (125011).

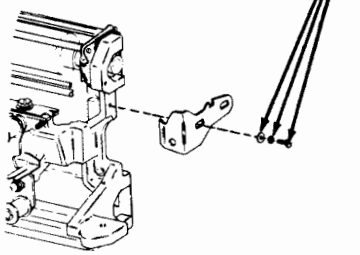

⑥ Rotate finger lever clockwise on left type carrier (idler) pulley to gain access to mounting screw (153442), lockwasher (45815), and flat washer (41663). Remove hardware.

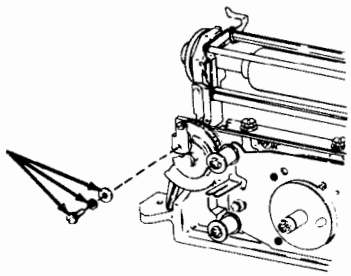

⑦ Remove three remaining screws (153442), lockwashers (45815), and flat washer (41663). Move front casting assembly (400201) to left until clear of type carrier pulley and remove.

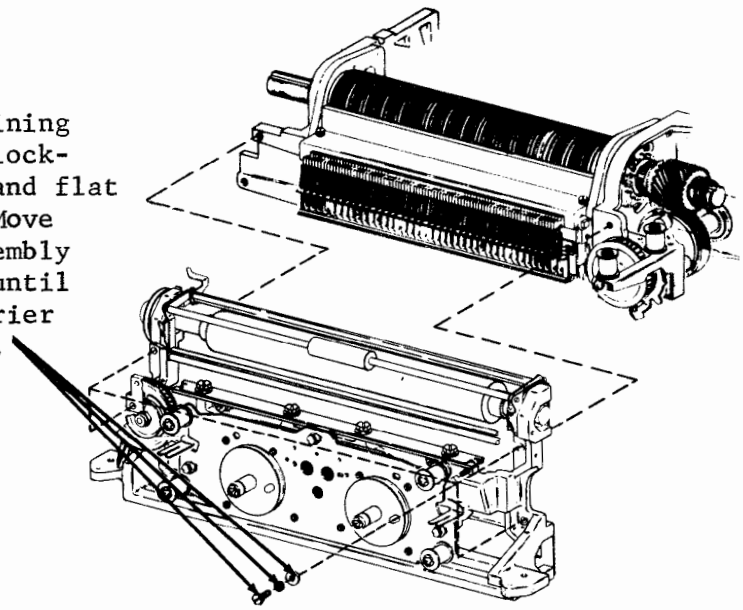

In reassembly, do not forget to follow through with Type Carrier Replacement (Page 7-65), AC Input and Motor Control Replacement (Page 7-70) and 410640 Circuit Card Replacement (Page 7-72). The front casting adjustments should be checked to see if adjustment is required.

G. PRINTER (Cont)

1. FRICTION FEED (Cont)

Right Casting Assembly (400300)

Remove type carrier -- see Page 7-65.

Remove ac power and motor control -- see Page 7-70.

Remove circuit card -- see Page 7-72.

Remove front casting -- see Page 7-72.

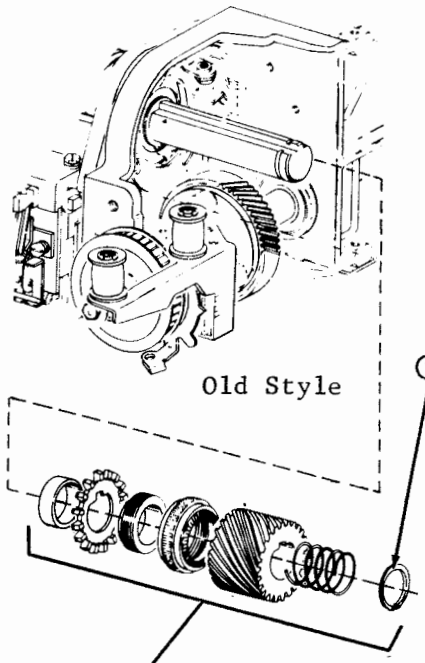

① Remove retainer (400075) from shaft.

② Slide off spring, gear, adjusting ring, collar, timing wheel, and bushing from shaft.

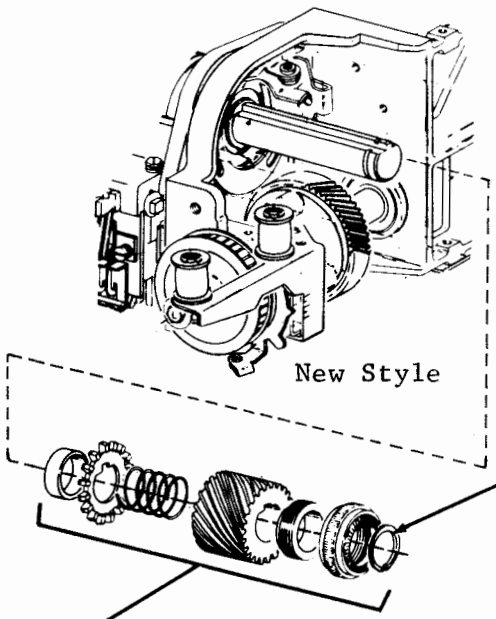

① Remove retainer (400075) from shaft.

② Slide off adjusting ring, collar, gear, spring, timing wheel, and bushing from shaft.

③ Unhook spring (110438) from post on sensor bracket.

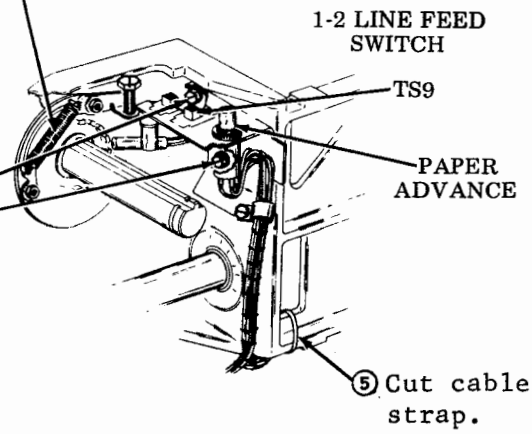

④ Remove two screws w/lock-washers (184056), and slide switch bracket out.

⑤ Cut cable strap.

NOTE: If slide switch (400560) or button switch (400561) has to be replaced, use the following illustration for parts replacement.

- To remove sensors proceed as follows:

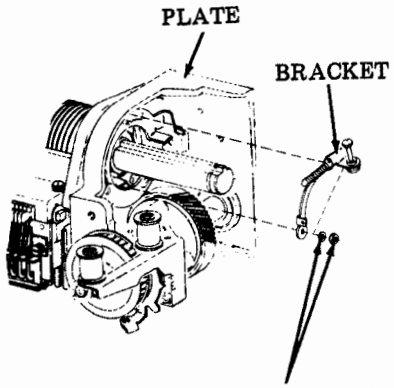

⑥ Remove two nuts (3599) and lockwashers (3640) holding bracket to plate. Remove bracket.

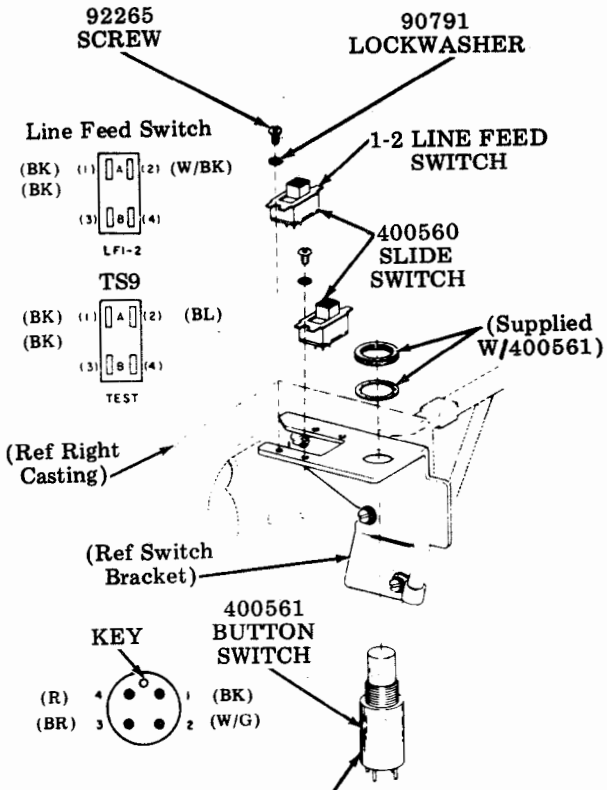

Replaced by 402500 set of parts which uses 402427 lamp (removable).

⑨ Be careful not to lose spacer (400931).

⑧ Loosen screw holding sensor. Remove sensor (400615).

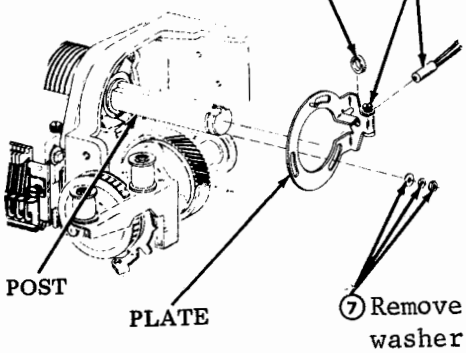

⑦ Remove nut (3599), lockwasher (3640), and flat washer (125011) holding the plate to post. Remove plate.

⑪ Be careful not to lose spacer (400931).

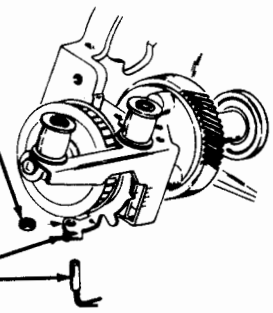

⑩ On the front, loosen the screw holding the sensor. Remove sensor.

G. PRINTER (Cont)

1. FRICTION FEED, Right Casting Assembly (400300) (Cont)

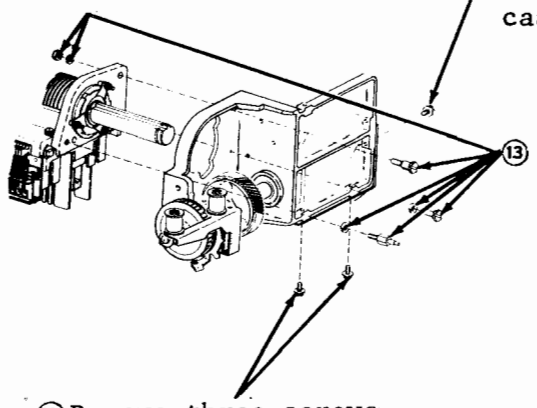

⑫ Remove three screws w/lockwashers (184057) holding bottom pan to casting.

⑬ Remove shoulder screw (400293), lockwasher (2669), and nut (112626); remove screw (153442) and lockwasher (45815); remove post (400457) and lockwasher (2669); remove right casting assembly (400300).

⑫ Remove three screws w/lockwashers (184057) holding bottom pan to casting.

NOTE: It is suggested that when the right casting is removed, a 3-inch piece of wood be placed under the right end of the center casting to keep it from dropping.

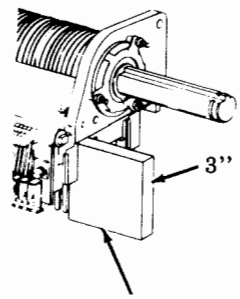

In reassembly, do not forget to follow through with Front Casting Replacement (Page 7-72), 410640 Circuit Card Replacement (Page 7-72), AC Input and Motor Control (Page 7-70) and Type Carrier (Page 7-65). Check the Impeller Shaft Sensor Gap and Flag Sensor Gap adjustments. On printing test, the Impeller Shaft Sensor and Flag Sensor adjustments may have to be checked.

Motor and Motor Fan

Remove cover -- see Page 7-71.

Old Style

(Right Side View)

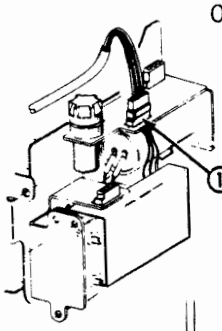

① Remove motor cable connector (401649).

New Style

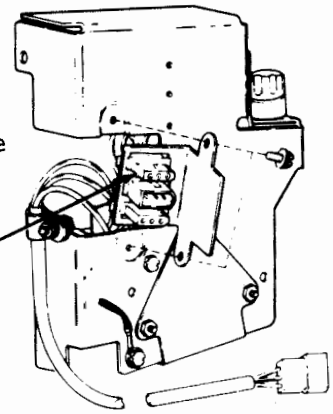

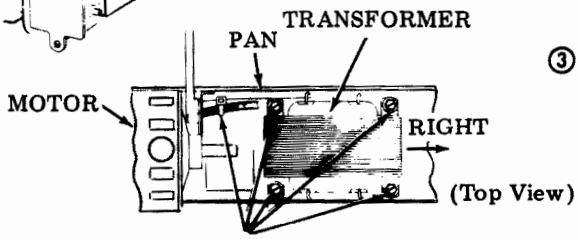

② Remove four screws (173974), lockwashers (45815), and flat washers (3438) holding transformer to pan. Slide transformer toward right as far as possible. Cut nylon strap.

③ Pull fan (328282) off from end of motor shaft.

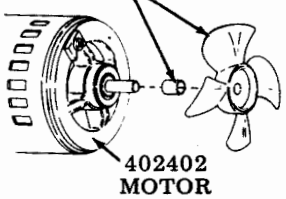

NOTE: Red reset button may be present on some units for overload protection. 402402 motors require a 402632 motor control assembly with a 402423 motor start relay. See Page 7-70.

⑥ Loosen three motor adjusting screws friction tight.

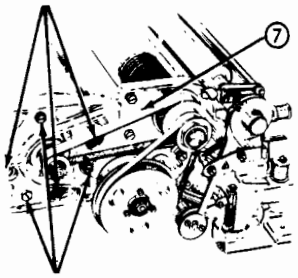

⑦ Press motor inward and up to release belt tension. Remove belt (400631).

(Left Side View)

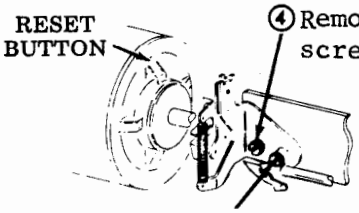

④ Remove left mounting screw (184056).

⑧ Remove top mounting screw (99082) and lockwasher (93985). Remove the two bottom mounting screws (151723) and lockwashers (45815). Remove motor assembly (400965).

⑤ Loosen right mounting screw and then pivot switch bracket up approximately 90 degrees.

In reassembly, make sure fan blade is properly remounted and does not touch mounting plate of paper-out assembly. Plug cable connectors.

In reassembly, perform Impeller Shaft Belt Tension adjustment.

G. PRINTER (Cont)

1. FRICTION FEED (Cont)

Low Paper Alarm and Paper Advance Switch Assembly (400955)

Remove the cover -- see Page 7-71.

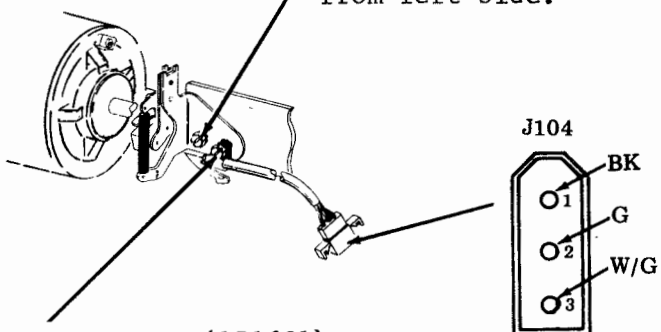

① Remove screw (184056) from left side.

② From right side remove screw (151631), lockwasher (2191), and flat washer (7002). Unplug connector from associated cable connector. Remove low paper switch assembly (400955) (low paper switch -- 400579).

In reassembly, make sure the connectors are plugged together.

Transformer (400901)

Remove cover -- see Page 7-71.

② Unsolder 4 leads to transformer. Remove transformer (400901).

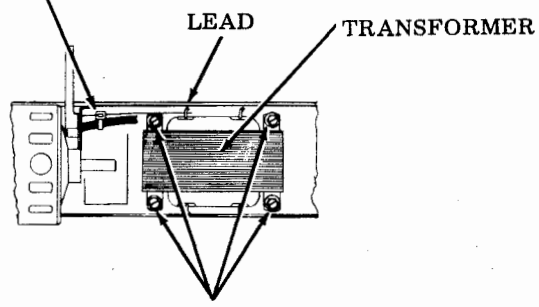

In reassembly, note the numbering of the transformer terminals and follow the coloring wire list. Retie the cable.

① Remove four screws (173974), four lockwashers (45815), and four flat washers (3438) holding transformer to pan.

CAUTION: BE CAREFUL NOT TO CUT OR PINCH ANY OTHER WIRES.

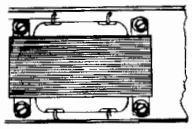

Terminal	Color
1	BK
2	W
3	Y
4	BR

2. TRACTOR FEED

NOTE: Procedures for 80- and 132-columns are similar. Printer shown is 80-column. Part numbers for 80- and 132-column are indicated.

Removal and Replacement of the Entire Printer Assembly

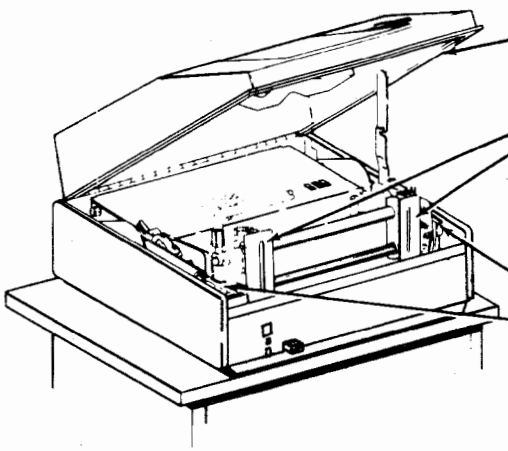

① Open cover.

② Remove paper by releasing paper guide and opening forms tractors.

③ Release printer to tilt position by pressing left and right latchlevers to paper.

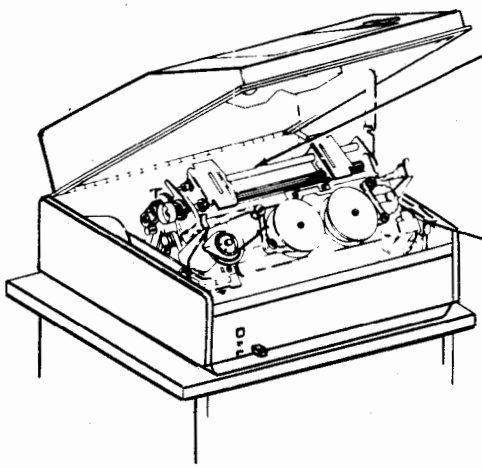

⑤ Pull printer forward by grasping handle at top, and slide off mounting tracks.

④ Insert screwdriver in right mounting track and pry up detent.

G. PRINTER (Cont)

2. TRACTOR FEED, Removal and Replacement of the Entire Printer Assembly (Cont)

Printer Subassembly Identification

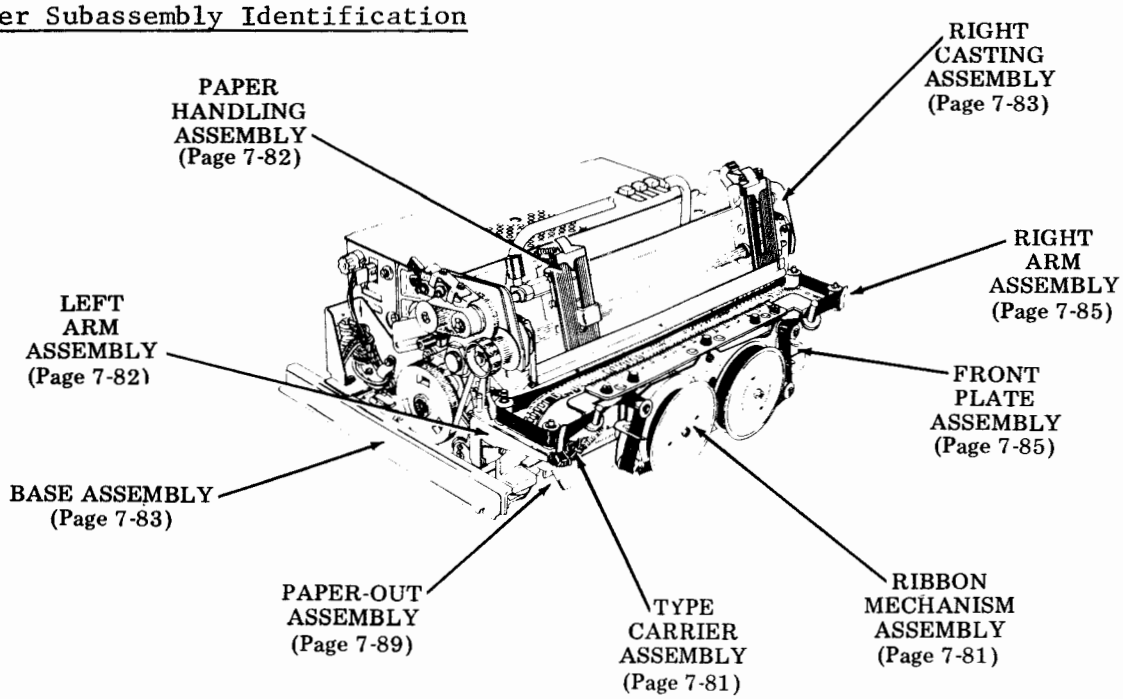

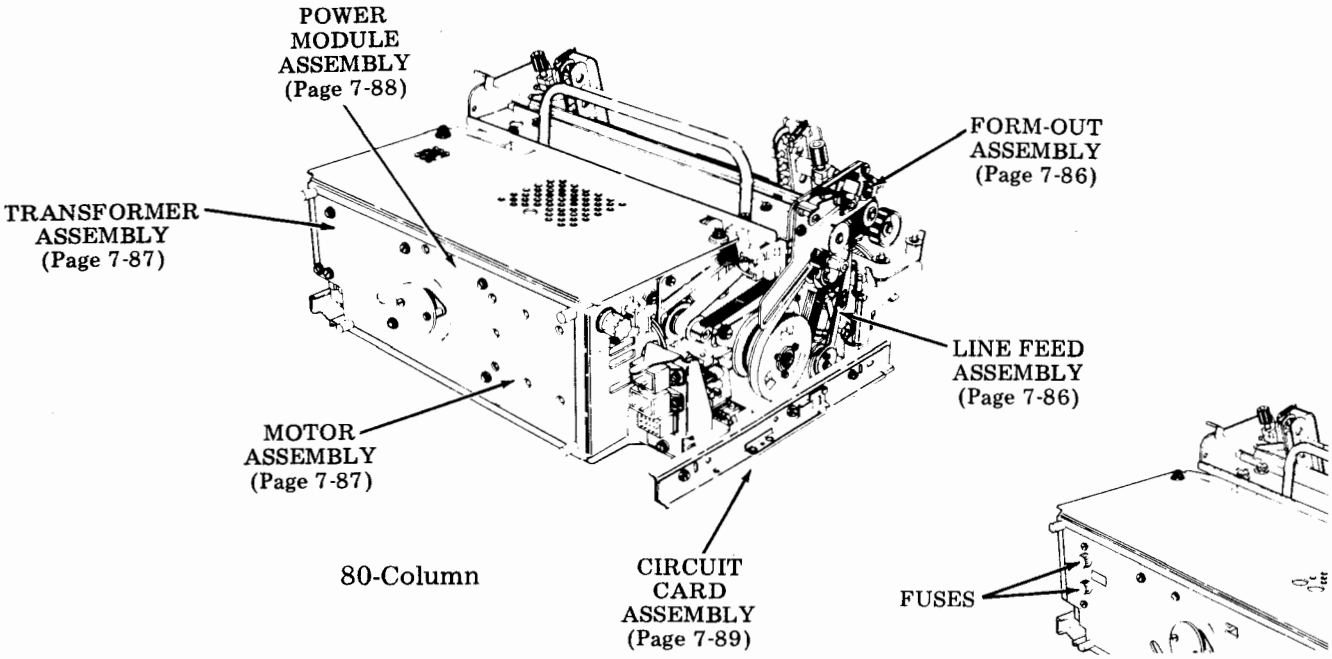

132-Column

NOTE: To remove a subassembly, go to the procedure referenced by page.

Ribbon Mechanism Assembly (402420)

① Remove ribbon (402444 not shown).

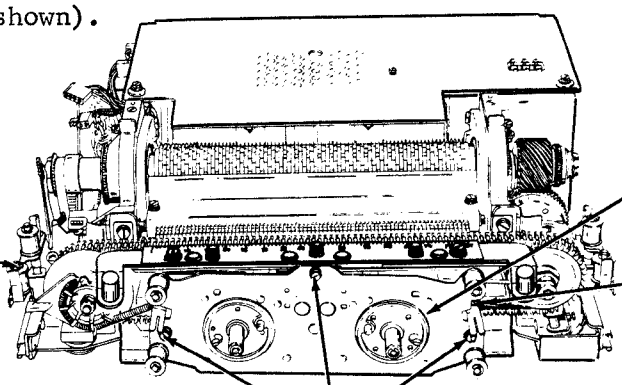

③ Move to right to remove belt (400630) -- 80-column, (400635) -- 132-column.

② On 80-column, remove three screws w/lockwashers (184056). (On 132-column, remove two nuts, lockwasher, and flat washer.)

In reassembly, perform the Ribbon Feed Drive Belt Tension adjustment.

Type Carrier Assembly (400645/400629 -- 80-Column, (400777 or 400780) -- 132-Column

① Remove ribbon (402444 not shown).

② Release thumb levers on left and right ribbon guide brackets allowing guides to spring to sides of printer.

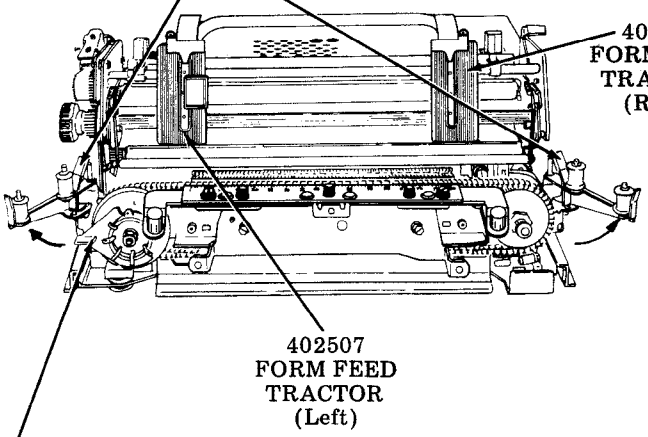

④ Flags should be to left and right of backup bar for ease of removal. Lift up arm on left type carrier pulley to release spring bias on pulley. While holding arm up, lift type carrier from right pulley and remove.

③ Remove three thumbscrews and lockwashers, then remove carrier top guide from over type carrier.

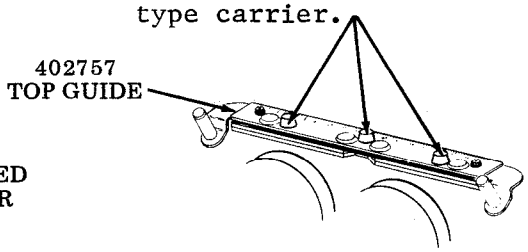

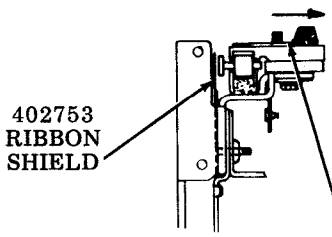

⑤ When replacing the carrier top guide, make sure it is positioned to front. This insures that type carrier is positioned against backup bar.

CAUTION: WHEN REPLACING THE TYPE CARRIER, PLACE THE CARRIER ON THE LEFT PULLEY FIRST AND MAKE SURE ALL THE PALLET STEMS AT THE TOP OF THE BELT ARE LOCATED UNDER THE BACKUP BAR.

G. PRINTER (Cont)

2. TRACTOR FEED (Cont)

Left Arm Assembly (402625) -- 80-Column, (402673) -- 132-Column

Remove type carrier -- see Page 7-81.

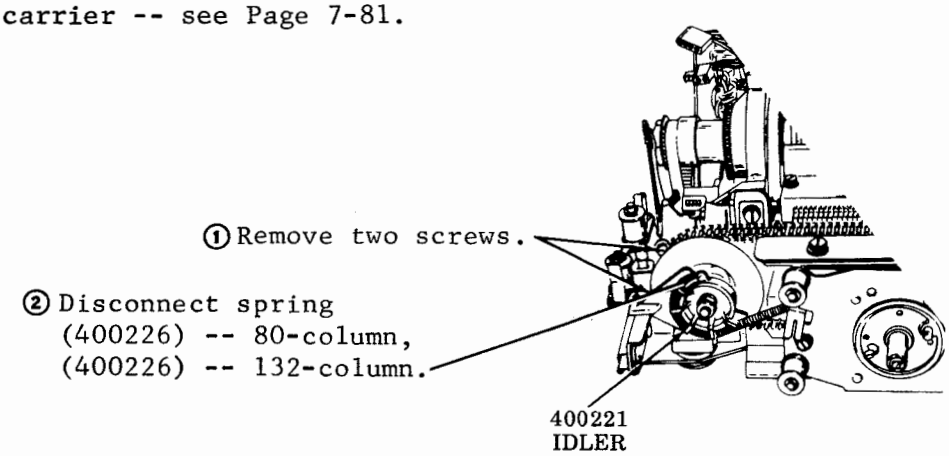

In reassembly, Idler Roller adjustment must be made.

Paper Handling Assembly (402460) -- 80-Column, (402660) -- 132 Column

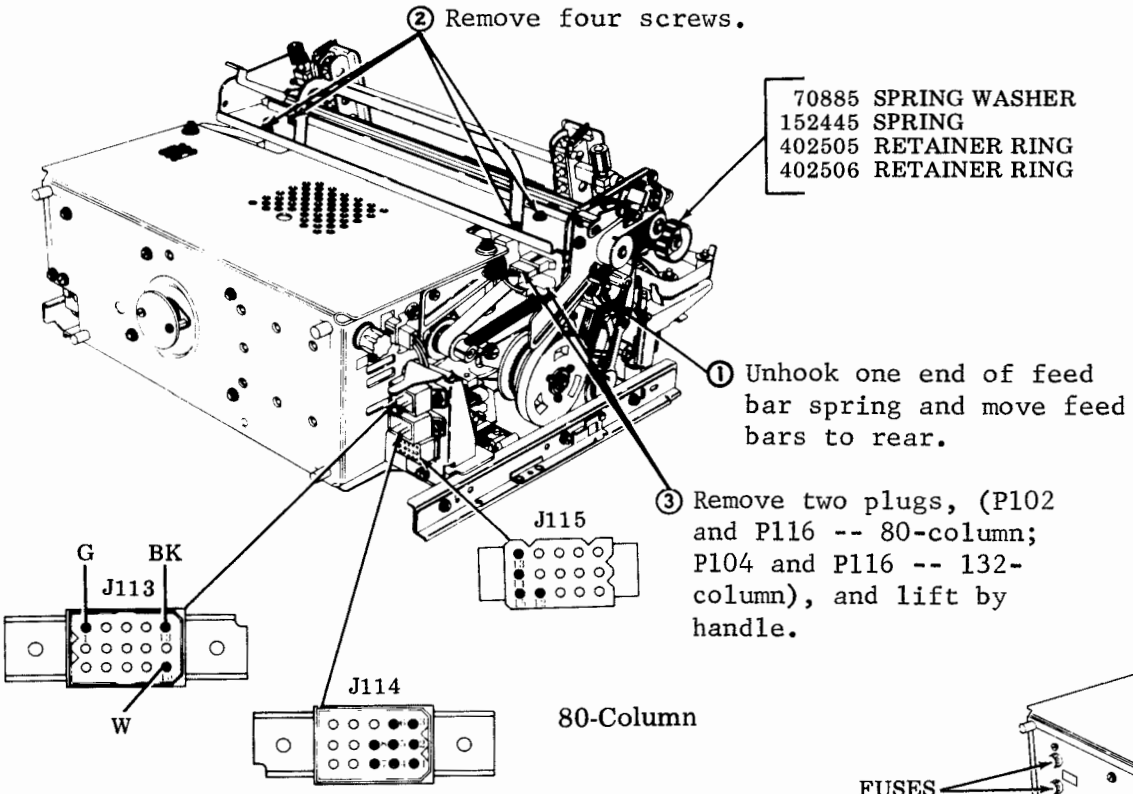

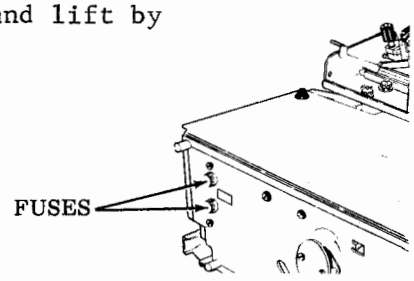

132-Column

Base Assembly (402533 -- 80-Column,
402675 -- 132-Column)

Remove circuit card -- see Page 7-89.

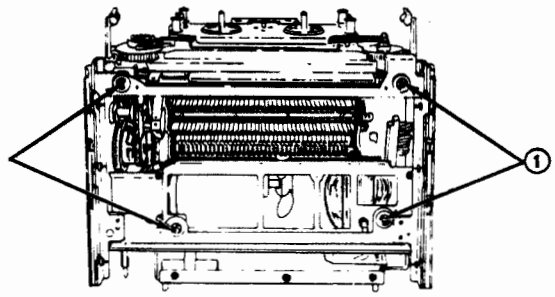

① Remove four ring retainers and spacers.

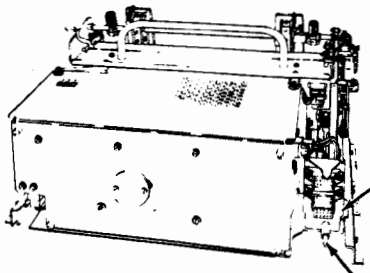

② Loosen two connector bracket mounting screws.

③ Remove post that secures connector bracket to base.

④ Remove base.

Right Casting Assembly (402622 -- 80-Column)

NOTE: 132-column printer does not have an assembly number for the right casting assembly.

Remove type carrier -- see Page 7-81.
Remove circuit card -- see Page 7-89.
Remove base -- see Page 7-83.
Remove front plate -- see Page 7-85.
Remove paper handling -- see Page 7-82.
Remove power module -- see Page 7-88.

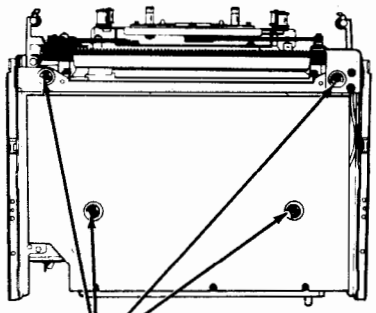

① Remove four retaining rings in order to remove printer base.

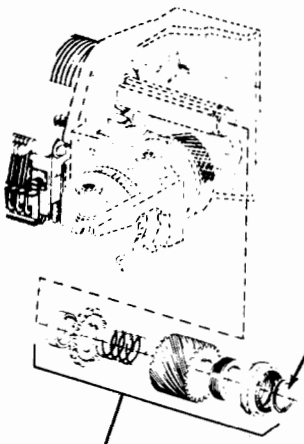

② Remove retaining ring from shaft.

③ Slide off adjusting ring, collar, gear, spring, timing wheel, and bushing from shaft.

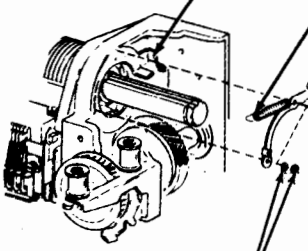

④ Unhook spring (110438) from post on sensor bracket.

⑤ Remove two nuts (3599) and lockwashers (3640) holding bracket to the plate. Remove bracket.

G. PRINTER (Cont)

2. TRACTOR FEED, Right Casting Assembly (402622) (Cont)

⑧ Be careful not to lose spacer (400931).

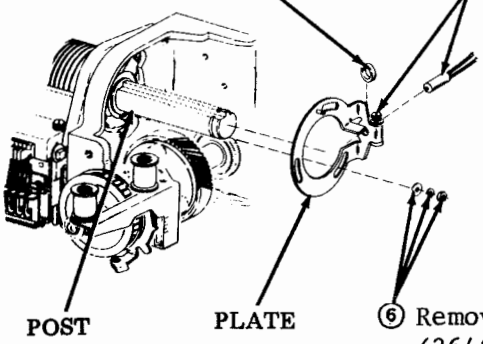

⑦ Loosen screw holding the sensor. Remove sensor.

⑥ Remove nut (3599), lockwasher (3640), and flat washer (125011) holding plate to post. Remove plate.

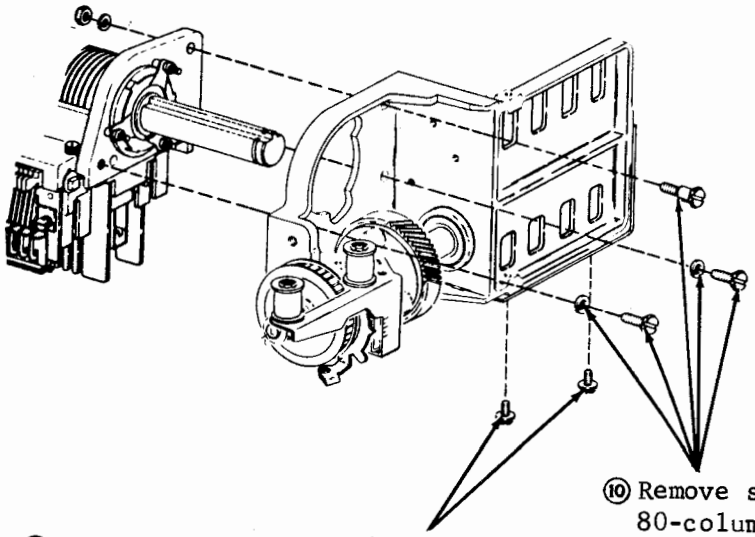

⑨ Remove two screws w/lockwashers (184057) holding bottom pan to casting.

⑩ Remove shoulder screw (400293) -- 80-column, (402689) -- 132-column, lockwasher (2669), and nut (112626); remove two screws (153442) and lockwasher (45815); remove right casting assembly.

Right Arm Assembly (402626) -- 80-Column, (402674) -- 132-Column

① Remove ribbon (402444 -- not shown).

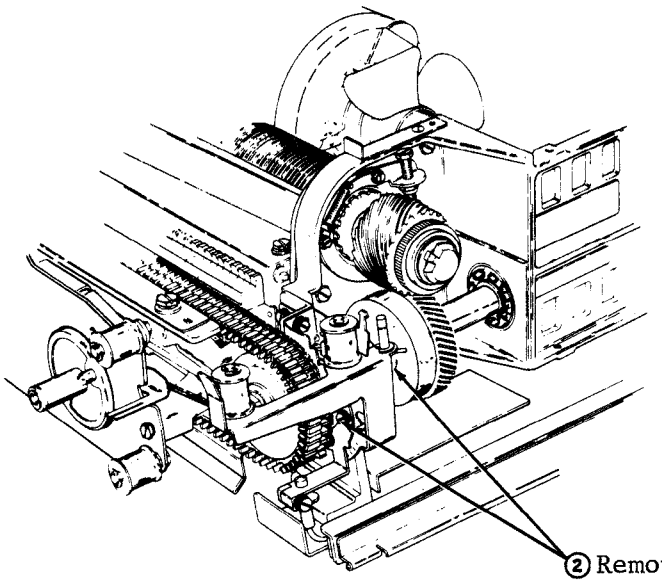

② Remove two screws (400499), two lockwashers (2191) and two flat washers (7002). This frees the flag sensor mounting bracket (402450) which should be moved aside. Remove screw (151631) and lockwasher (2191) fastening right arm assembly to frame.

In reassembly remake the Flag Sensor Gap and the Flag Sensor Final adjustments.

Front Plate Assembly (402430) -- 80-Column, (400725) -- 132-Column

Remove type carrier, see Page 7-81.

Remove ribbon feed assembly, see Page 7-81.

Remove left arm assembly, see Page 7-82.

① Remove four mounting screws.

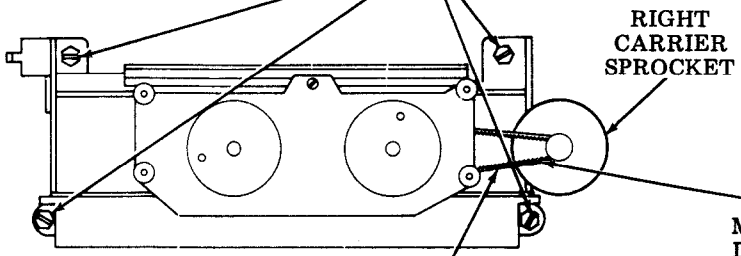

NOTE: 402686 ribbon shield mounted on this assembly.

② Move assembly to right to remove ribbon mechanism drive belt.

CAUTION: DO NOT LOSE FOUR SPACERS.

In reassembly, make Ribbon Mechanism Drive Belt adjustment.

G. PRINTER (Cont)

2. TRACTOR FEED (Cont)

Form-Out Assembly (402570)

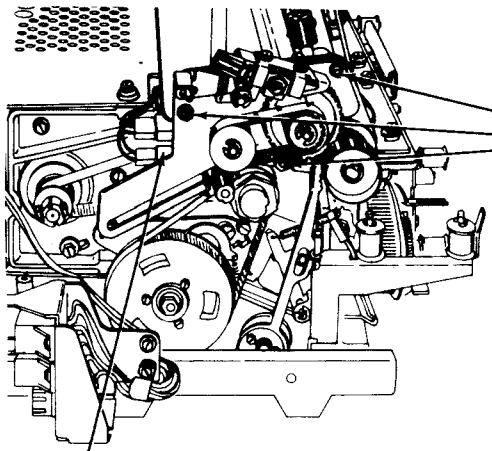

① Remove three nuts and lockwashers.

② Remove lower connector J116.

In reassembly, remake Gear Backlash adjustment.

Form-Out Belt Selection

Form Selector Setting				Color of Belt	Part No.
4	3	2	1		
Length of Form, Inches					
3-1/3†	2-1/2	5	10	Amber	402571
3-2/3†	2-3/4*	5-1/2	11	Blue	402572
4	3	6	12	Yellow	402573
4-1/3†	3-1/4*	6-1/2	13	Brown	402574
4-2/3†	3-1/2	7	14	Red	402575
5	3-3/4*	7-1/2	15	Pink	402576
5-1/3†	4	8	16	Lt Green	402577
5-2/3†	4-1/4*	8-1/2	17	Green	402578
6	4-1/2	9	18	Lt Blue	402579
7-1/3†	5-1/2	11	22	White	402580

*These settings are not used on 6 line per inch printers.
†These settings are not used on 8 line per inch printers.
Blue belt is factory furnished.

Line Feed Assembly (402621)

Remove circuit card -- see Page 7-89.

Remove form-out assembly -- see Page 7-86.

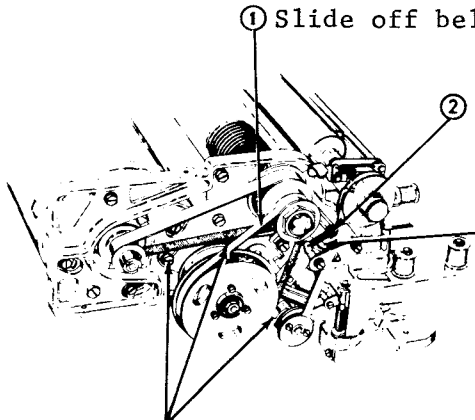

① Slide off belt.

② Disconnect one end of spring (55089).

④ Remove WHITE and BLACK wires from back side of coil.

③ Remove three screws and lockwashers.

In reassembly, Line Feed Drive Belt Tension adjustment must be made.

Motor Assembly (402402)

Remove paper handling -- see Page 7-82.

Remove power module -- see Page 7-88.

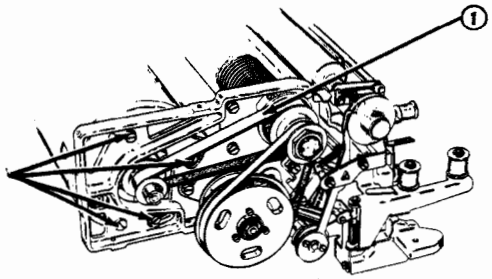

① Remove impeller drive belt.

② Remove four screws.

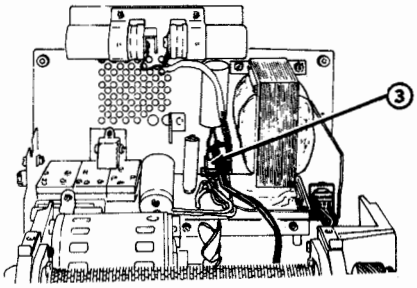

③ Remove P107.

In reassembly, make Impeller Drive Belt Tension adjustment.

Transformer Assembly (400901) -- 80-Column, (402742) -- 132-Column

(Transformer 40P153 Printer -- 402875)

Remove paper handling -- see Page 7-82.

Remove power module -- see Page 7-88.

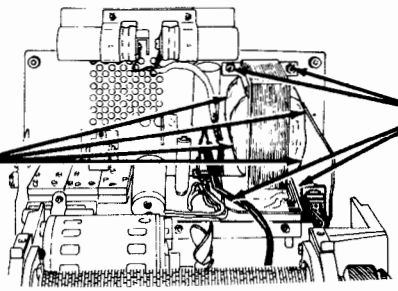

① 80-Column: Unsolder four wires -- W, BK, Y, BR -- at terminals of transformer.

132-Column: Unsolder seven wires.

② Remove four nuts from screw post.

③ 132-Column only:
Remove two capacitor clamp mounting nuts. Remove P117 plug from frame. Remove nut that secures braided ground strap. Slide cable assembly to right and remove transformer.

NOTE: 80-Column -- when installing a new transformer, the four wires must be soldered to its terminals -- W to 1, BK to 2, Y to 3, BR to 4.

132-Column -- resolder seven wires: W to 1, BK to 2, Y to 3, BR to 4, R to 6, G to 7, O to 8.

G. PRINTER (Cont)

2. TRACTOR FEED (Cont)

Power Module Assembly (402620) -- 80-Column, (402720) -- 132-Column

Remove circuit card -- see Page 7-89.

Remove paper handling -- see Page 7-82.

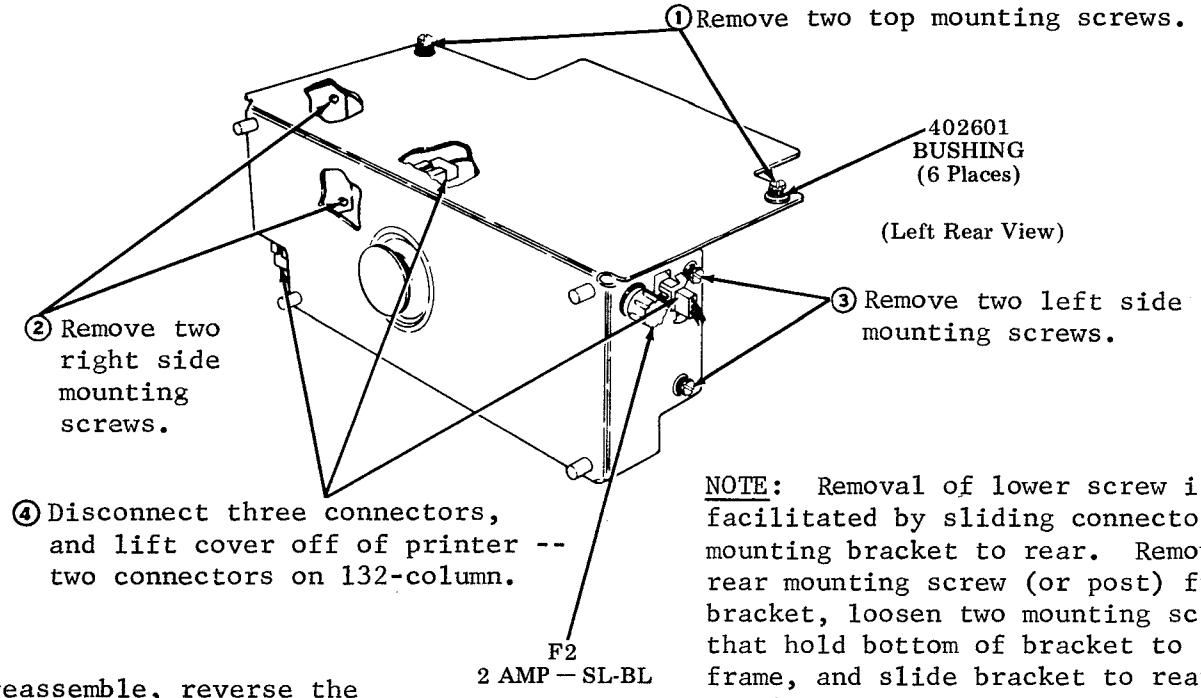

NOTE: Removal of lower screw is facilitated by sliding connector mounting bracket to rear. Remove rear mounting screw (or post) from bracket, loosen two mounting screws that hold bottom of bracket to frame, and slide bracket to rear until cover mounting screw is accessible.

To reassemble, reverse the disassembly procedure.

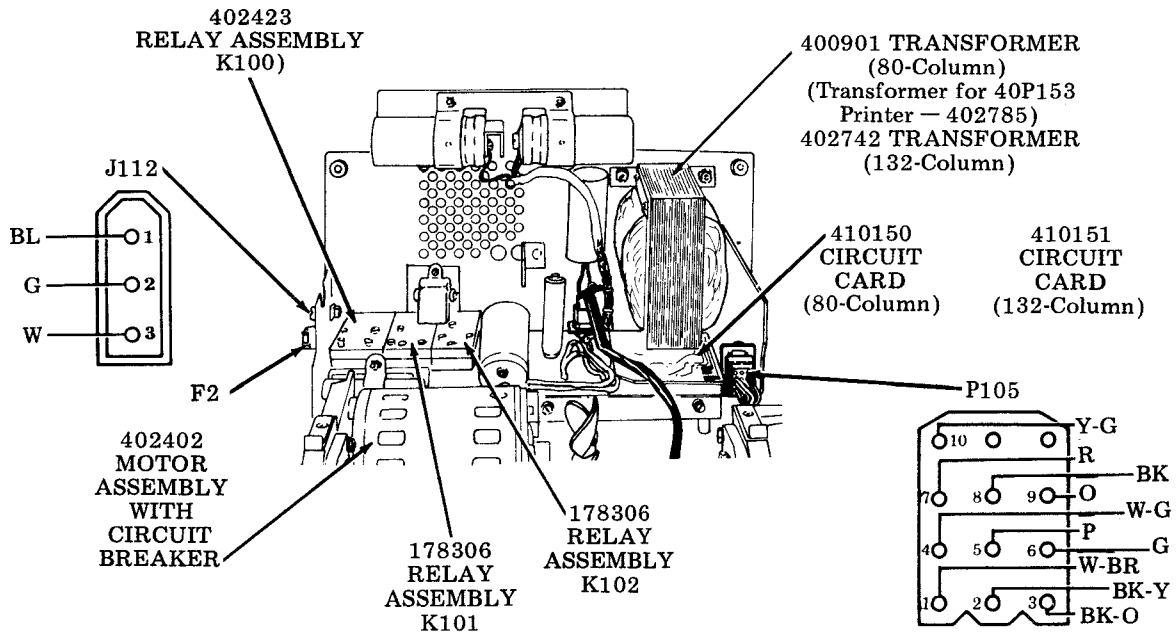

NOTE: Power Supply Assembly -- 40P153 Printer (402789).

Circuit Card Assembly

NOTE 1: Service personnel should wear 346392 protective ground strap for this procedure.

NOTE 2: If either a new 410640 or 410729 card is replaced, perform the Impeller Shaft Sensor and the Flag Sensor adjustments after card is mounted in the printer.

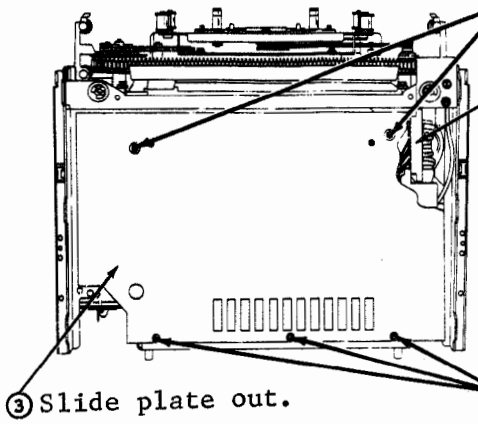

① Remove two screws.

④ 80-Column:
Remove connector from card, and using pull points, pull card down and out.
132-Column:
Unplug flat cable (P109) from left side of 410729 circuit card. Slide to left. Lift left-hand side of circuit card away from printer to a 90° position. Unplug sensor (P106) and power supply cables from logic card.

③ Slide plate out.

② Loosen three screws.

Paper-Out Switch Assembly (402406) -- 80-Column

Remove front plate assembly -- see Page 7-85.

Remove the front mounting screw on the paper-out switch. Slide switch out.

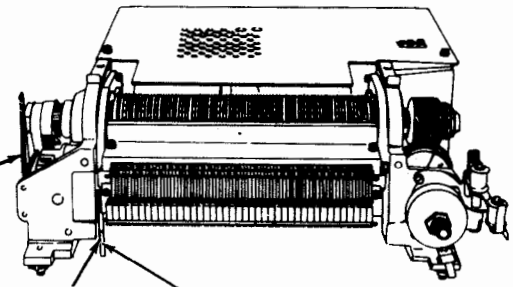

402610
PAPER-OUT
SPRING

402613
PAPER-OUT
SWITCH (80-Column)
402510 (132-Column)

Sprocket Replacement

- Remove impeller shaft drive belt first.

① Remove screw (153841), lockwasher (2191), and nut (3598) from sprocket (400280). Remove sprocket.

② Replace with new sprocket.

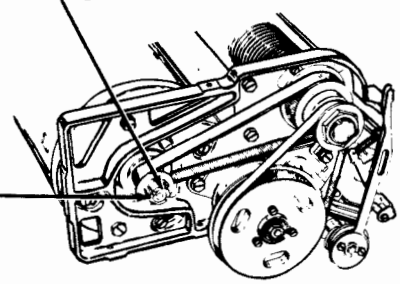

In reassembly, perform the Impeller Shaft Drive Belt Tension adjustment; check the Clutch Drive Belt Tension adjustment.

NOTE: Use this procedure to change from 60 Hz to 50 Hz (or vice versa). A 400282 (50 Hz) gear is mounted on a plate on the left side of the printer. As shipped, the motor is equipped with a 60 Hz gear.

H. CABINETS AND PEDESTALS

1. CABINET PARTS REMOVAL

40CAB201/AA and 40CAB201/AC

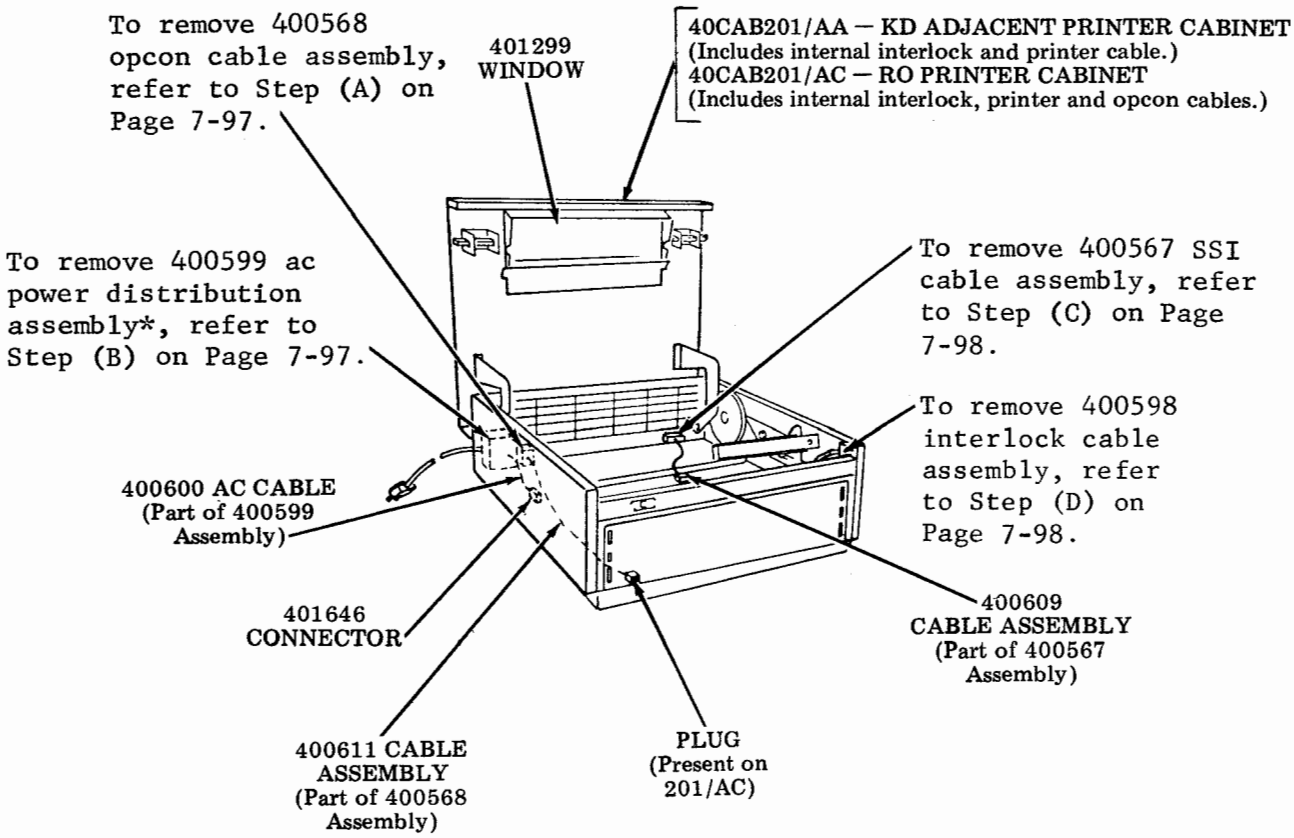

*Late design cabinets may use 405050 ac distribution assembly in place of 400599 assembly; if so, 405048 printer ac cable must be used.

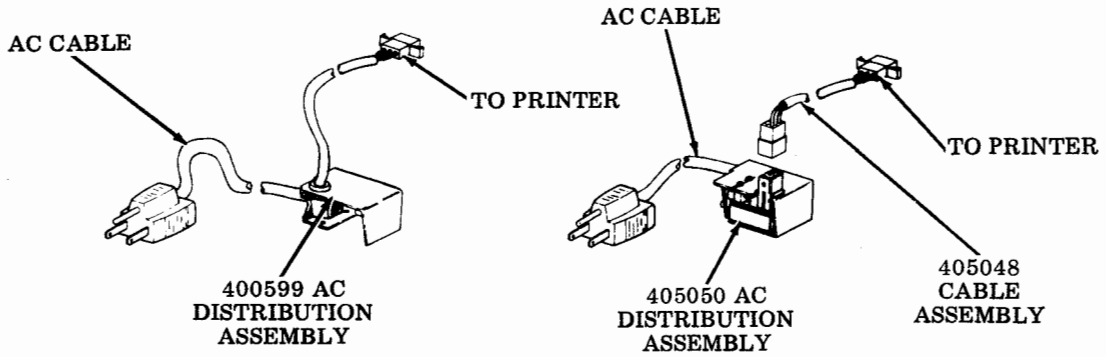

Early Design

Late Design

40CAB201/AB

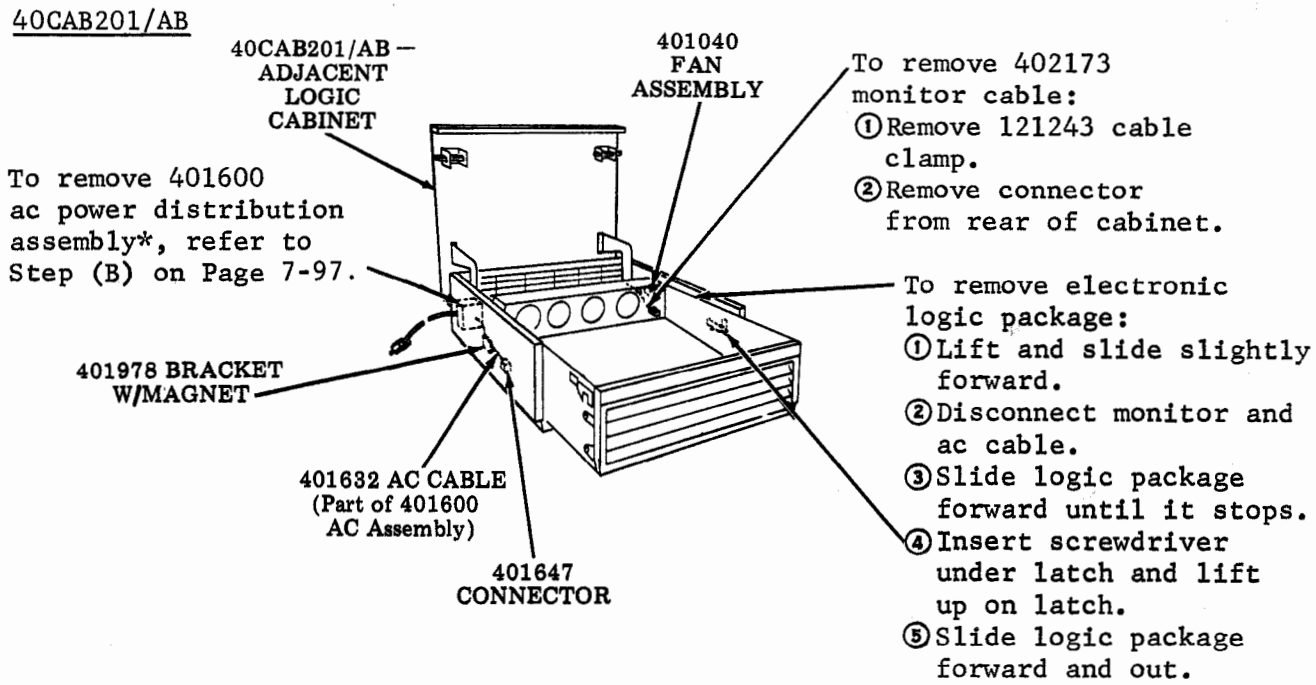

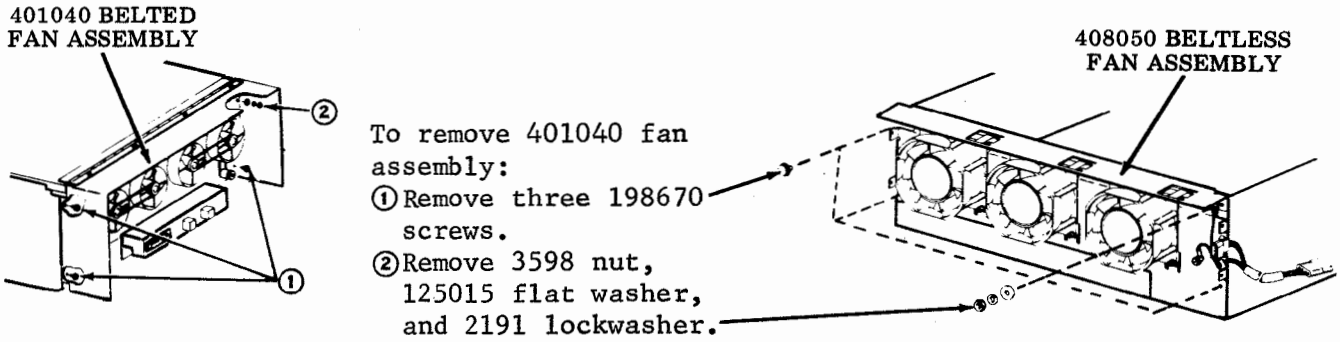

NOTE: To disassemble 401040 fan assembly, refer to Page 7-101.

*Late design cabinets may use 405050 ac distribution assembly in place of 401600 assembly; if so, 405047 fan ac cable must be used.

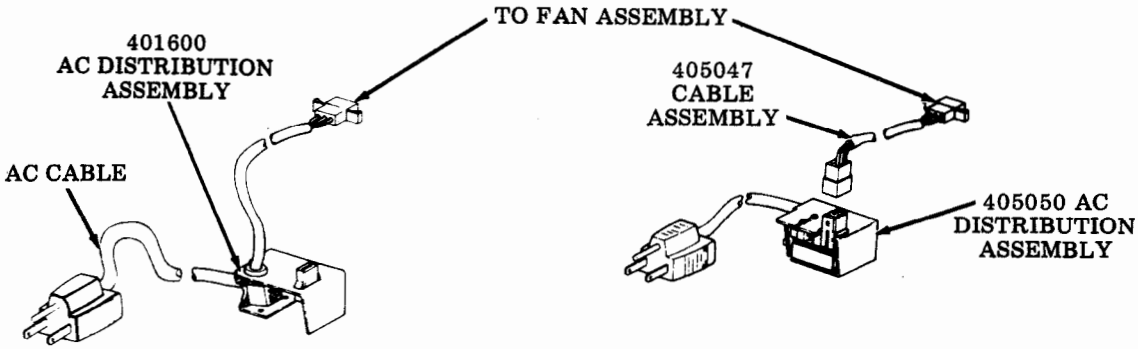

Early Design

Late Design

H. CABINETS AND PEDESTALS (Cont)

1. CABINET PARTS REMOVAL (Cont)

40CAB251/AA

To remove 400621 SSI Cable Assembly, refer to Step (C) on Page 7-98.

40CAB251/AA — KD PRINTER UNDER MONITOR CABINET (Includes internal interlock, printer and opcon cables.)

402146 CABLE ASSEMBLY (Part of 400621 Assembly)

To remove 401633 or 405051 monitor cable:
1. Loosen cable clamps.
2. Remove connector from cabinet.
3. Remove cable assembly.

To remove 341911 cable assembly:
1. Loosen cable clamps.
2. Remove connectors from cabinet.
3. Remove cable assembly.

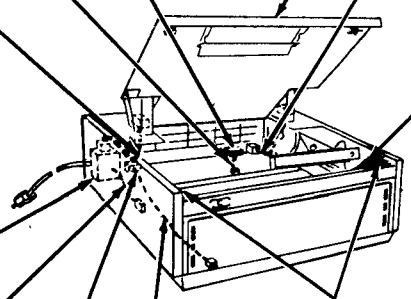

To remove 400598 interlock cable assembly, refer to Step (D) on Page 7-98.

To remove 400618 ac power distribution assembly*, refer to Step (B) on Page 7-97.

SLIDE RELEASE LATCHES

400619 AC CABLE (Part of 400618 Assembly)

To remove 400620 opcon cable assembly, refer to Step (A) on Page 7-97.

402147 CABLE ASSEMBLY (Part of 400620 Assembly)

To gain access to assemblies mentioned:
1. Open cabinet lid.
2. Slide frame with printer forward until it stops.
3. Remove printer.

Depress slide release latches to push frame back into cabinet.

*Late design cabinets may use 405050 ac distribution assembly; if so, 405049 printer ac cable must be used. 401633 monitor cable must also be replaced with 405051 monitor cable.

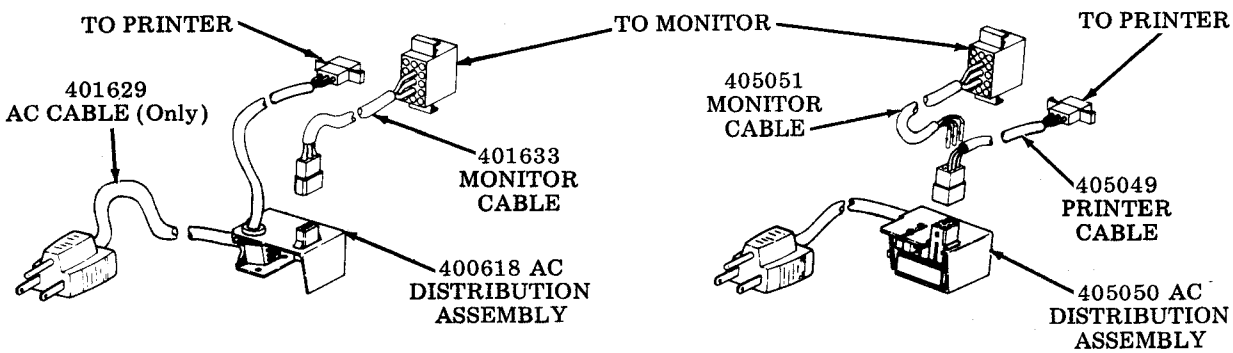

Early Design

Late Design

40CAB251/AB

To remove 401633 or 405051 monitor cable:
1. Loosen cable clamps.
2. Remove connector from cabinet.
3. Remove cable assembly.

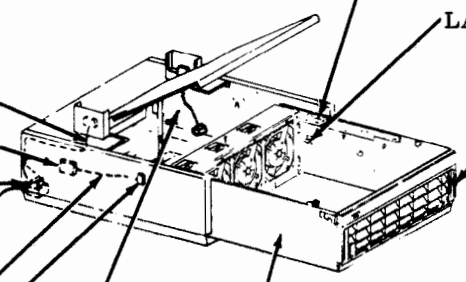

To remove 401600 or 405050 ac power distribution assembly*, refer to Step (B) on Page 7-97.

To remove 341891 monitor cable:
1. Slide electronic logic package forward.
2. Raise 401783 bracket to remove monitor cable from grooves in fan assembly.
3. Disconnect cable plugs and remove.

To remove electronic logic package and fan assembly:
1. Lift and slide forward until logic package stops.
2. Disconnect fan and monitor cables on rear of logic package.
3. Loosen 341819 shoulder screw from top of fan assembly frame.
4. Insert screwdriver under latch and slide logic package slightly forward.
5. Raise 401783 bracket, if present, and remove monitor cable from grooves in fan assembly.
6. Remove logic package.

To remove 401040 or 408050 fan assembly, refer to Page 7-101.

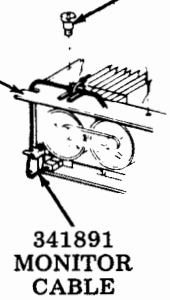

*Late design cabinets may use 405050 ac distribution assembly in place of 401600 assembly; if so, 405047 fan ac cable must be used. 401633 monitor cable must also be replaced with 405051 monitor cable.

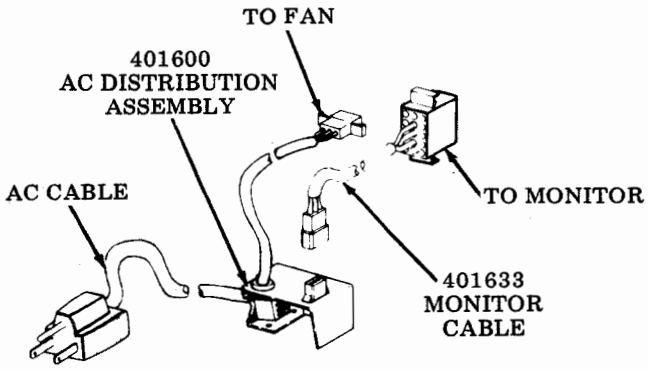

Early Design

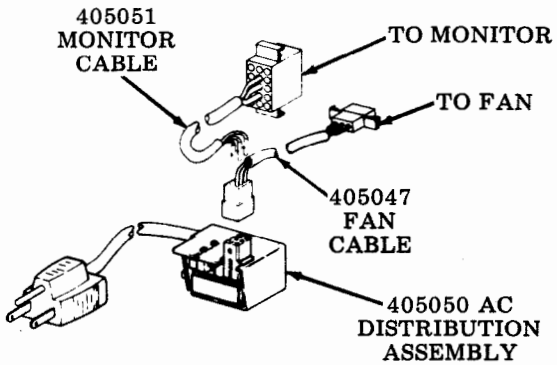

Late Design

H. CABINETS AND PEDESTALS (Cont)

1. CABINET PARTS REMOVAL (Cont)

40CAB351/ AND 40CAB353/ Series Cabinets

To replace 333588 lamp in 335123 switch:

1. Remove 403800 button.
2. Replace lamp.

To remove 335123 switches:

1. Remove switch button.
2. Remove nut from top of switch.
3. Unsolder leads.
4. Remove switch.

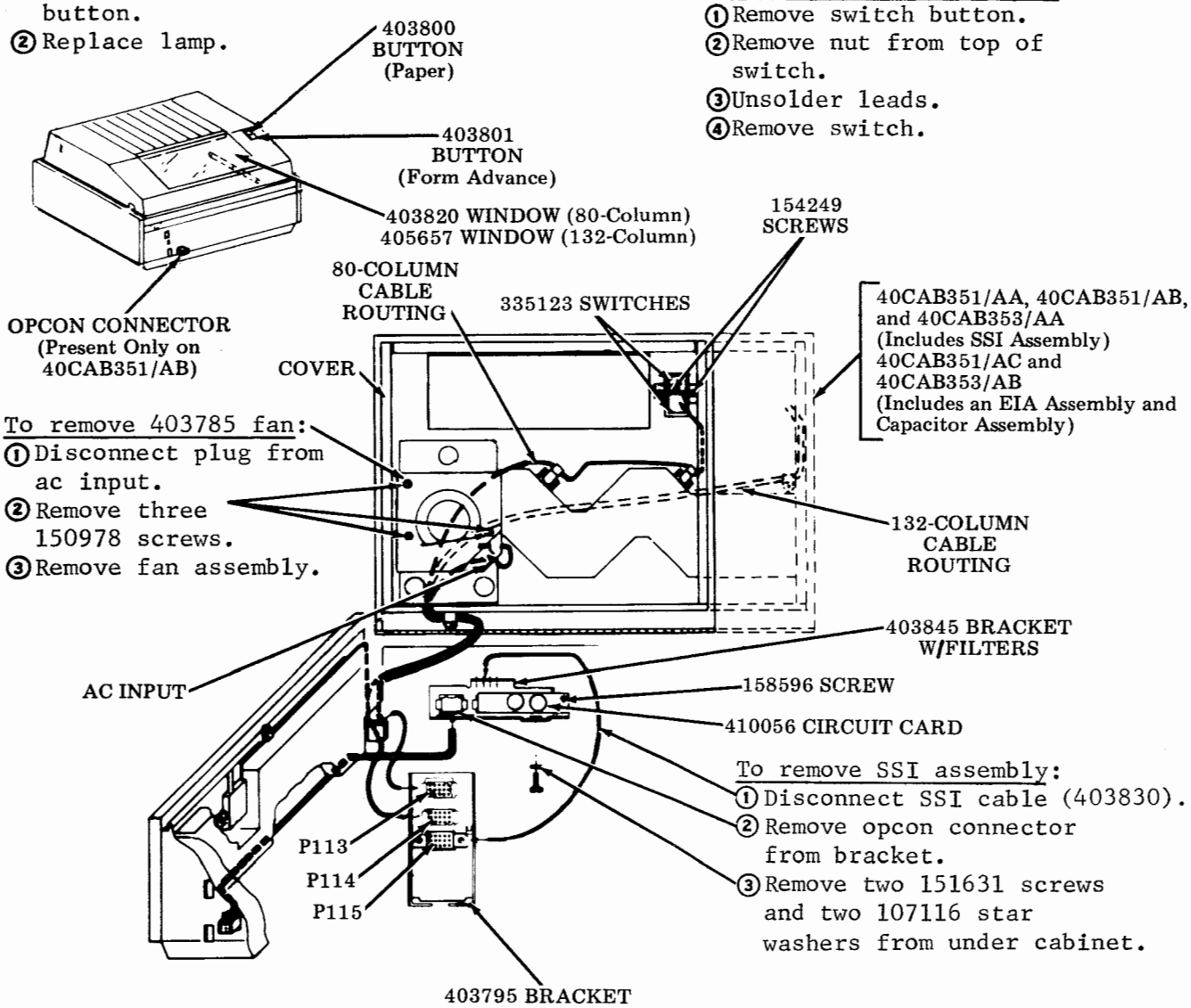

To remove 403785 fan:

1. Disconnect plug from ac input.
2. Remove three 150978 screws.
3. Remove fan assembly.

To remove SSI assembly:

1. Disconnect SSI cable (403830).
2. Remove opcon connector from bracket.
3. Remove two 151631 screws and two 107116 star washers from under cabinet.

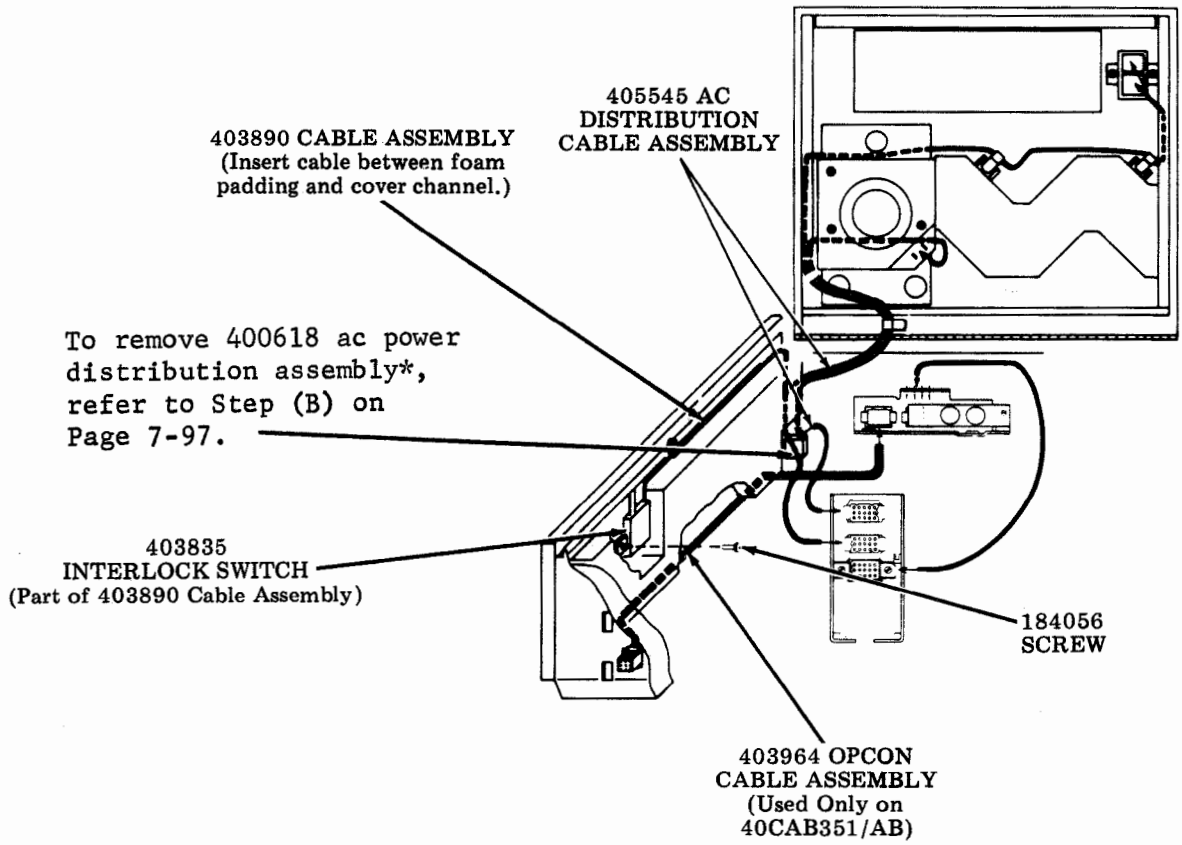

*Late design cabinets may use 405050 ac distribution assembly in place of 400618 assembly; if so, 403892 cable assembly must be used instead of 405545 cable assembly.

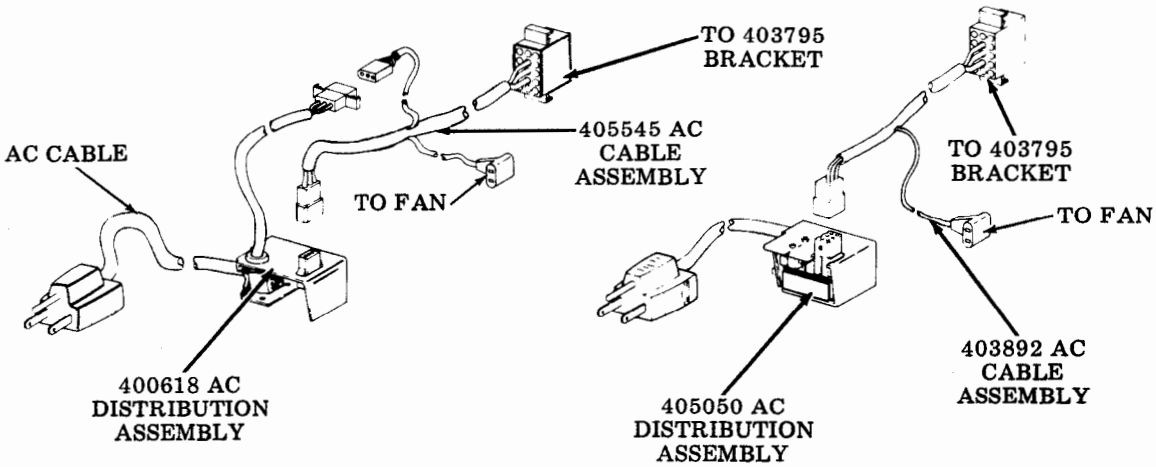

Early Design

Late Design

H. CABINETS AND PEDESTALS (Cont)

1. CABINET PARTS REMOVAL (Cont)

40CAB351/AC and 40CAB353/AB RO PRINTER CABINETS

To remove 407077 EIA signal input assembly:

1. Disconnect EIA plug from circuit card assembly.
2. Remove two 151631 screws and two 107116 lockwashers.
3. Remove assembly.

To remove 407076 capacitor assembly:

1. Remove terminals of 407302 power cable from ac power connector (341691).
2. Disconnect cables 403445 and 407302 from the circuit card assemblies.
3. Remove two 151631 screws and two 107116 lockwashers.
4. Remove assembly.

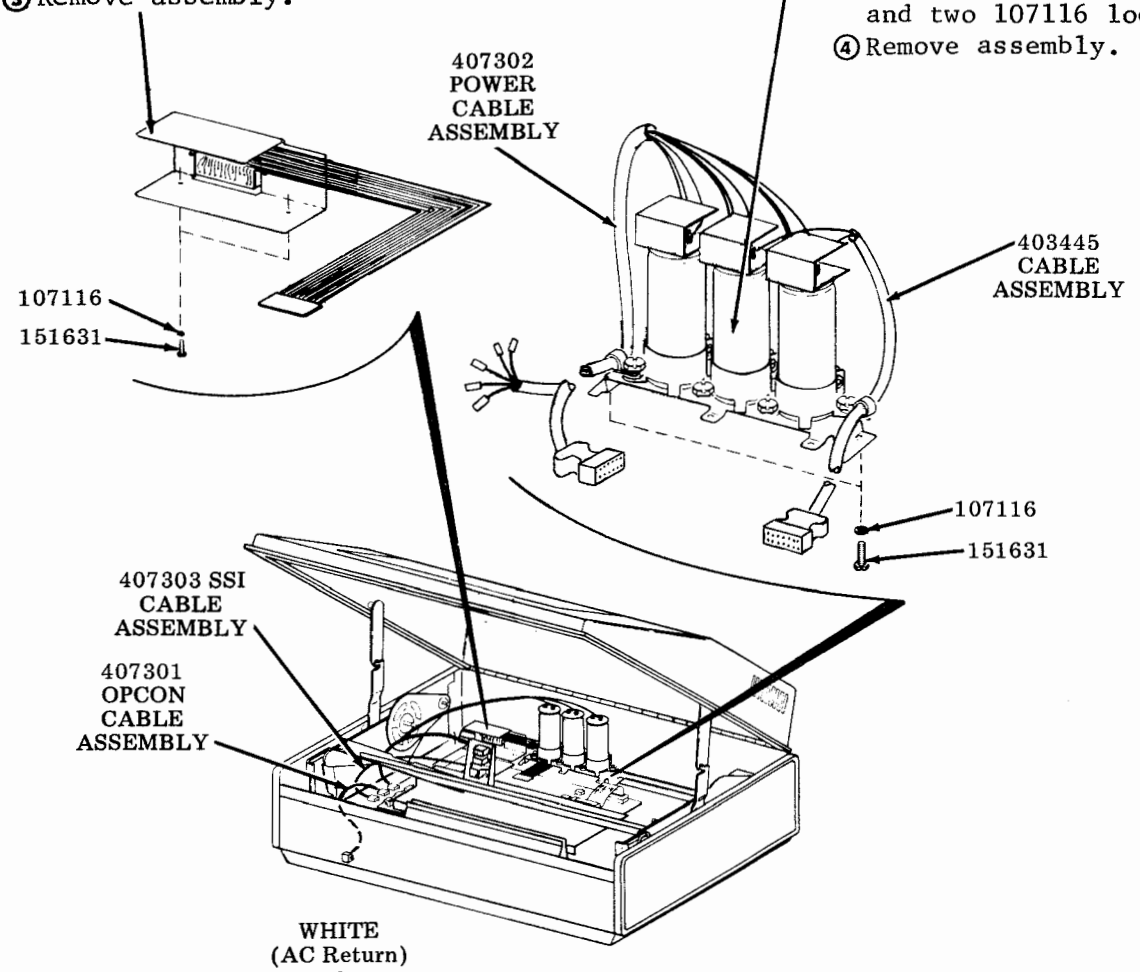

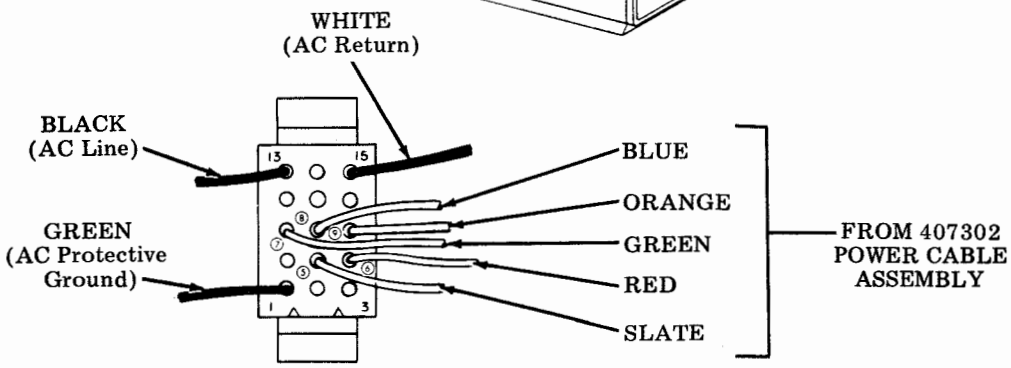

(Rear View AC Power Connector)

Component Removal

STEP (A)
To remove 400568 or 400620 opcon cable assembly (includes 400577 bracket and opcon cable):
① Remove 401150 connector from front of cabinet.
② Remove two of each: 151637 screws, 93984 lockwashers, and 125011 flat washers.
③ Remove assembly.

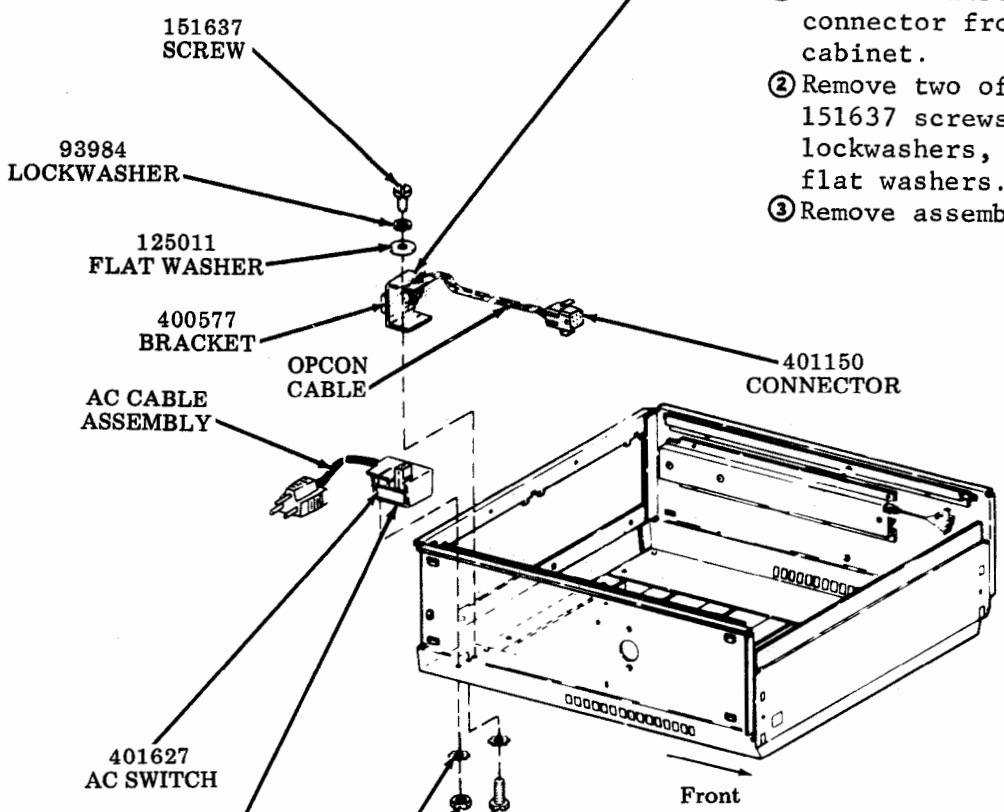

STEP (B)
To remove ac distribution assembly:
① Remove 3606 nut, 151722 screw and two 107116 lockwashers.
② Remove assembly.

H. CABINETS AND PEDESTALS (Cont)

1. CABINET PARTS REMOVAL, Component Removal (Cont)

STEP (C)
To remove 400567 or 400621 SSI assembly:
1. Remove three 151631 screws and three 107116 lockwashers.
2. Remove 400567 or 400621 assembly w/346272 bracket.
3. Remove 158926 screw and 151880 nut to disassemble 400567 or 400621 and 346272.

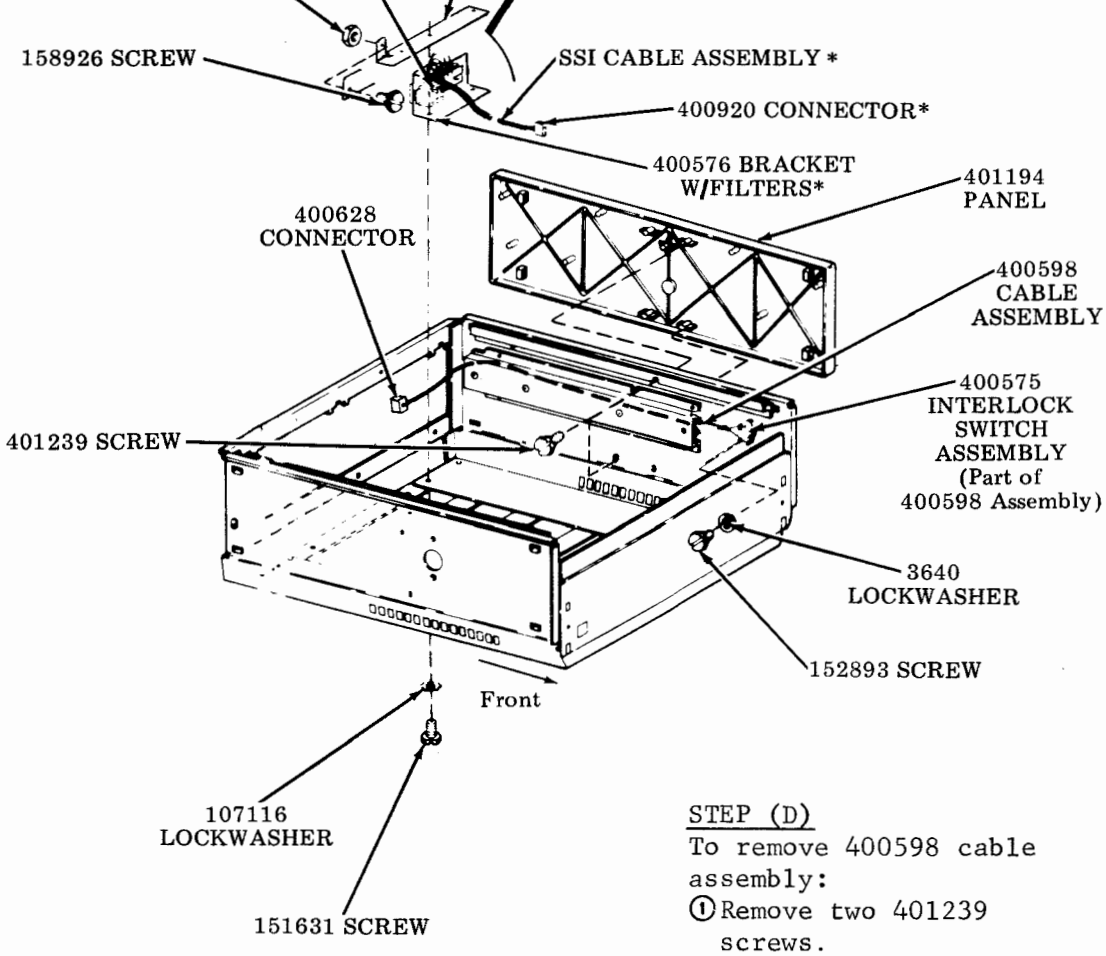

STEP (D)
To remove 400598 cable assembly:
1. Remove two 401239 screws.
2. Slide 401194 panel towards front and remove.
3. Remove two 152893 screws and two 3640 lockwashers.
4. Remove assembly.

*Part of 400567 or 400621 assembly.

2. PEDESTAL PARTS REMOVAL

Table Tops and 401666* Modification Kit

Pedestal -- 40CAB901/AH W/401666* Modification Kit

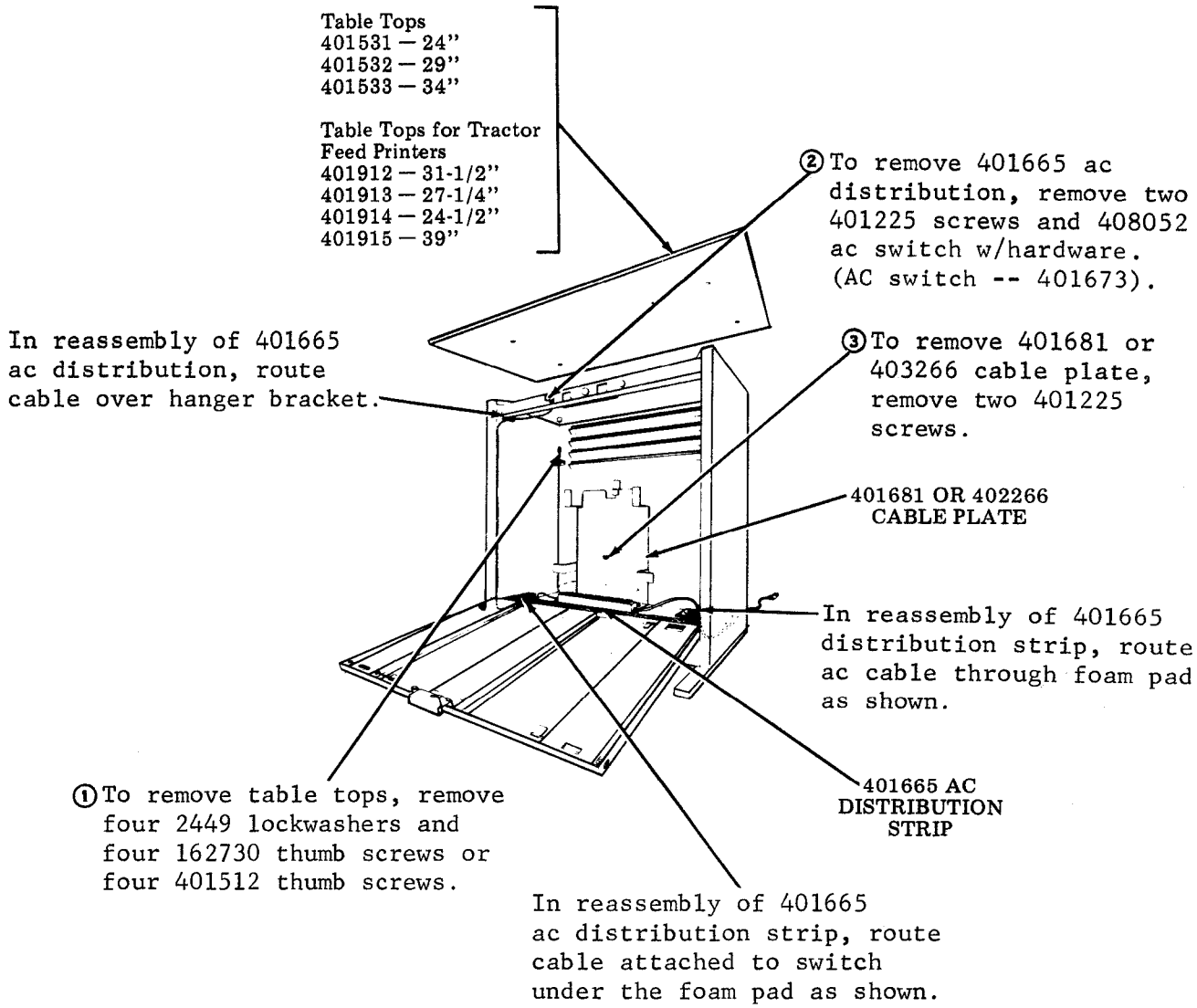

*401666 modification kit includes 401681 bracket and 401665 ac distribution strip w/ac switch.

H. CABINETS AND PEDESTALS (Cont)

2. PEDESTAL PARTS REMOVAL (Cont)

Electronic Package

For table top part numbers and removal, refer to Page 7-99.

To remove fan assembly and electronic package assembly, remove two 185871 screws w/washers (8-32 by 1-3/8 inch).

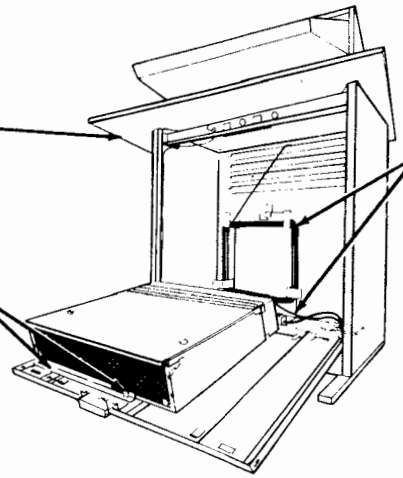

To remove 401681 and 401665 ac distribution assemblies w/switch refer to Page 7-99.

Pedestals
40CAB901/AF W/RO Logic
40CAB901/AG W/KD Logic

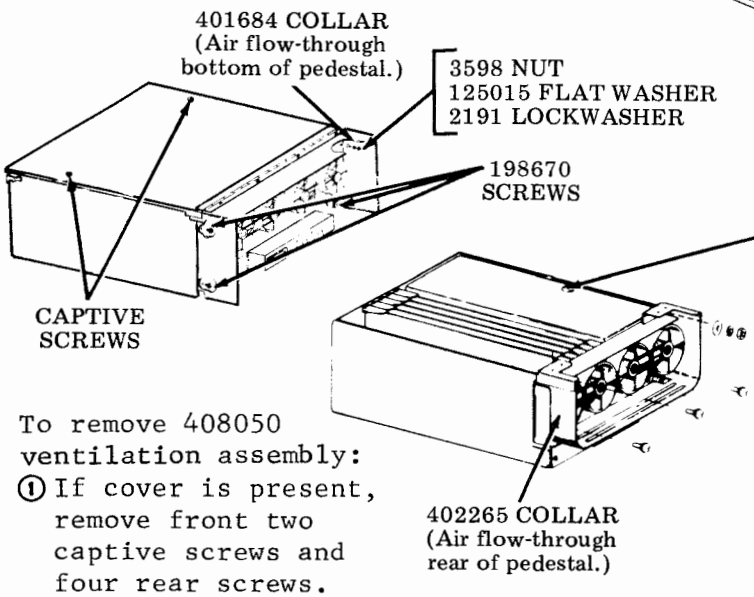

To remove 401040 ventilation assembly:

1. If cover is present, remove front two captive screws and four rear screws. Remove cover.
2. Disconnect cable from ventilation assembly to power supply.
3. Remove 3598 nut, 2191 lockwasher, 125015 flat washer and three 198670 screws.
4. Remove 401684 or 402265 collar and 401040 ventilation assembly.

To remove 408050 ventilation assembly:

1. If cover is present, remove front two captive screws and four rear screws. Remove cover.
2. Disconnect cable from ventilation assembly to power supply.
3. Remove four 156740 screws, four 2191 lockwashers and four flat washers. Remove 408030 fan guard assembly.
4. Remove 3598 nut, 2191 lockwasher, 125015 flat washer and three 198670 screws.
5. Loosen two 341819 shoulder screws and remove 408050 assembly.

NOTE: On ROP electronic package, remove two 198670 screws w/washers.

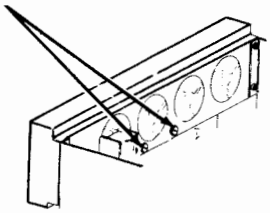

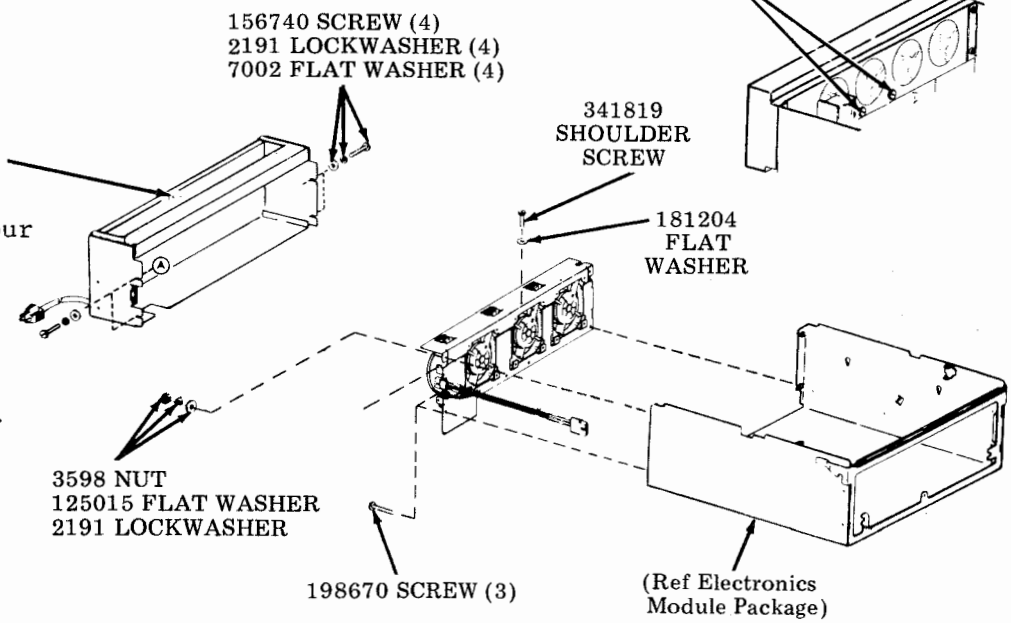

Disassembly of 401040 Fan Assembly

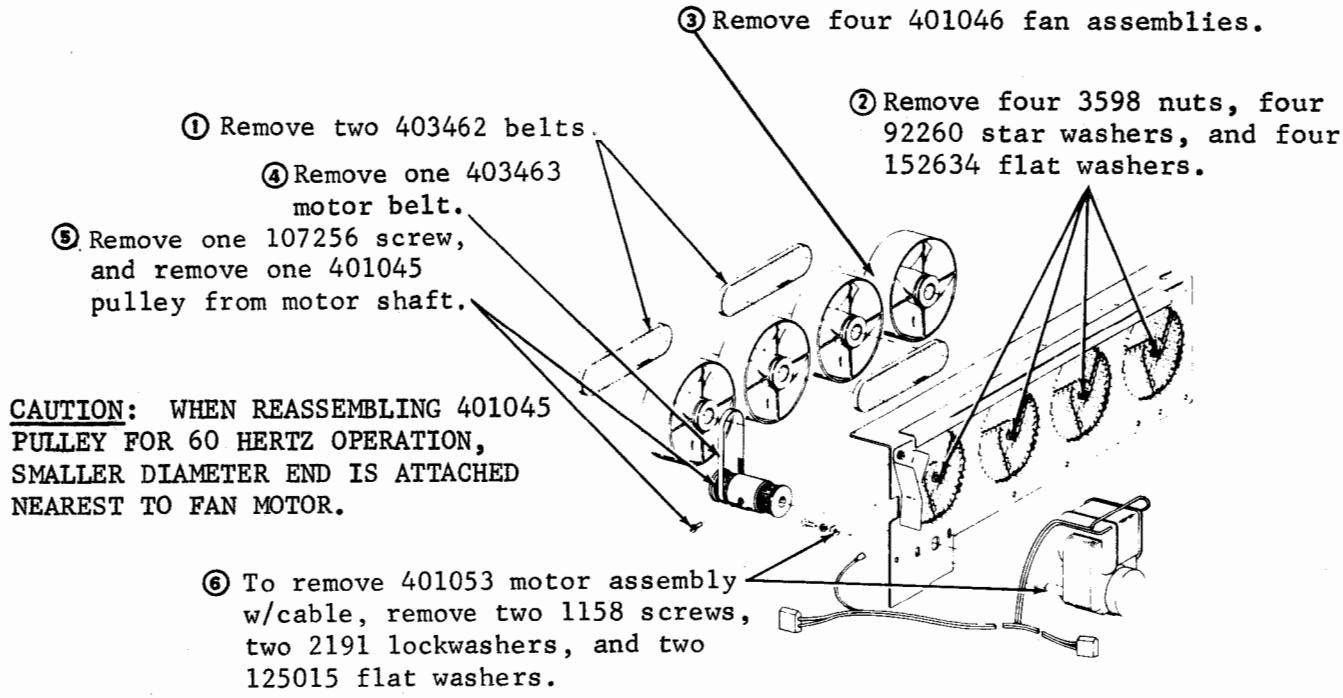

NOTE: When reassembling fan assemblies, apply one drop of oil at each bearing.

Disassembly of 408050 Fan Assembly

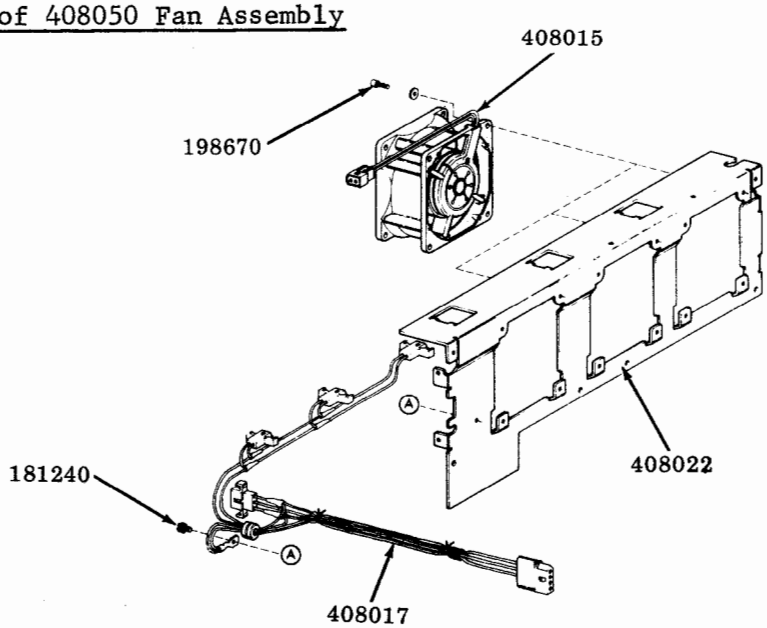

H. CABINETS AND PEDESTALS (Cont)

3. PAPER WINDER REMOVAL

To remove 401627 ac switch:

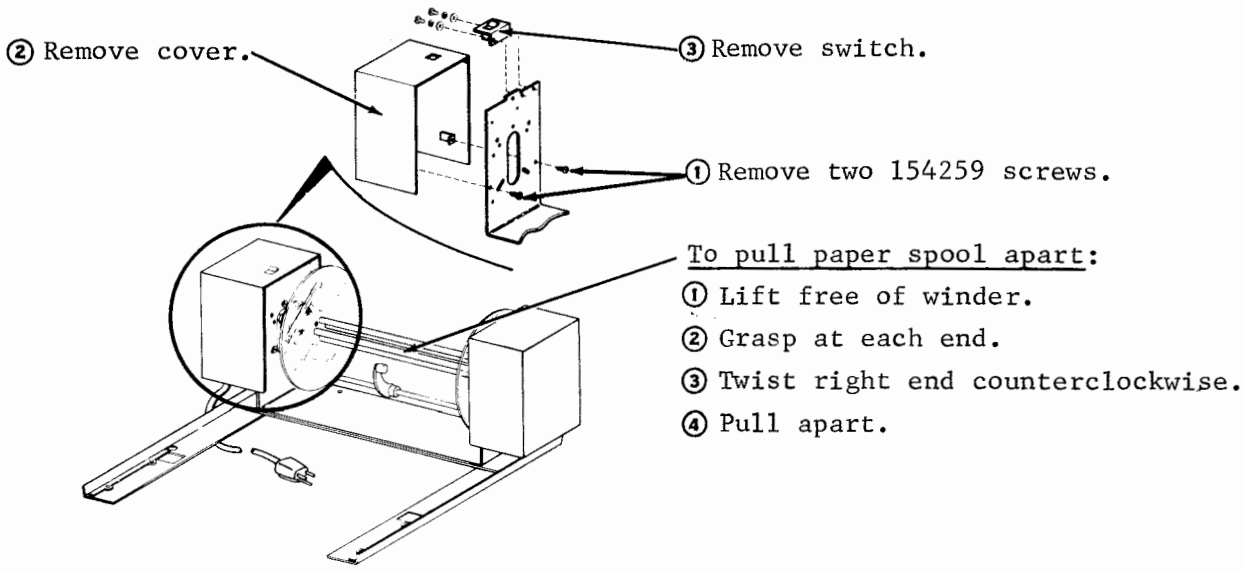

40PWU101 Paper Winder (Rear View)

4. ROP CONTROLLER INTERFACE CABLE ASSEMBLIES

ROP Electronic Logic Package

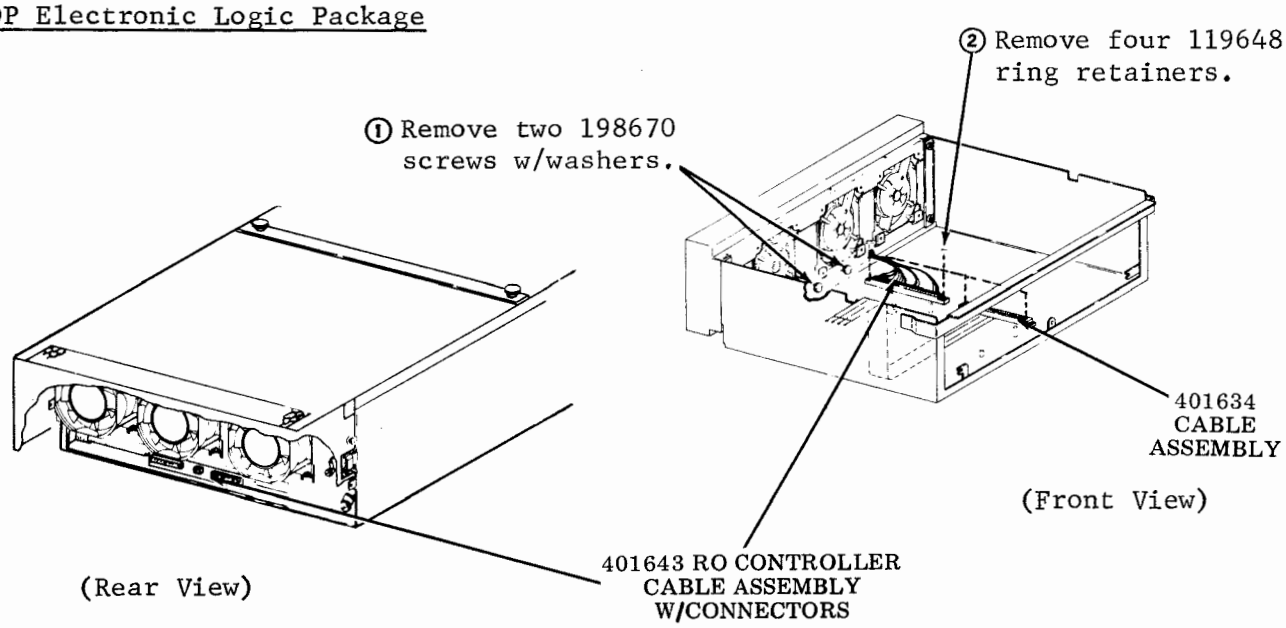

PART 8 — ROUTINE MAINTENANCE

INDEX

		PAGE
A.	GENERAL	2
B.	CABINET, PEDESTAL, AND OPCON	2
C.	MONITOR	3
D.	MISCELLANEOUS CHECKS	3
E.	PRINTER ROUTINING	
	1. GENERAL	5
	2. TYPE CARRIER REMOVAL AND CLEANING	5
	3. CLEANING	6
	4. CHECKS	9
	5. LUBRICATION	15
	6. PRINTER REASSEMBLY INTO CABINET	23
	7. CABINET CHECKS	23
	8. PRINTER TESTING	23

PART 8 — ROUTINE MAINTENANCE
A. GENERAL

DANGER: TURN OFF ALL THE POWER AND SIGNAL SOURCES BEFORE REMOVING OR REPLACING ANY COMPONENT. WEAR APPROVED SAFETY GLASSES WHEN THE HOUSING OF THE MONITOR IS REMOVED, AS THE DISPLAY TUBE IS FRAGILE IN THE NECK AREA AND IS SUBJECT TO IMPLOSION IF BROKEN. BE CAREFUL NOT TO STRIKE THE GLASS OF THE TUBE WITH TOOLS OR COMPONENTS WHEN WORKING IN ITS VICINITY.

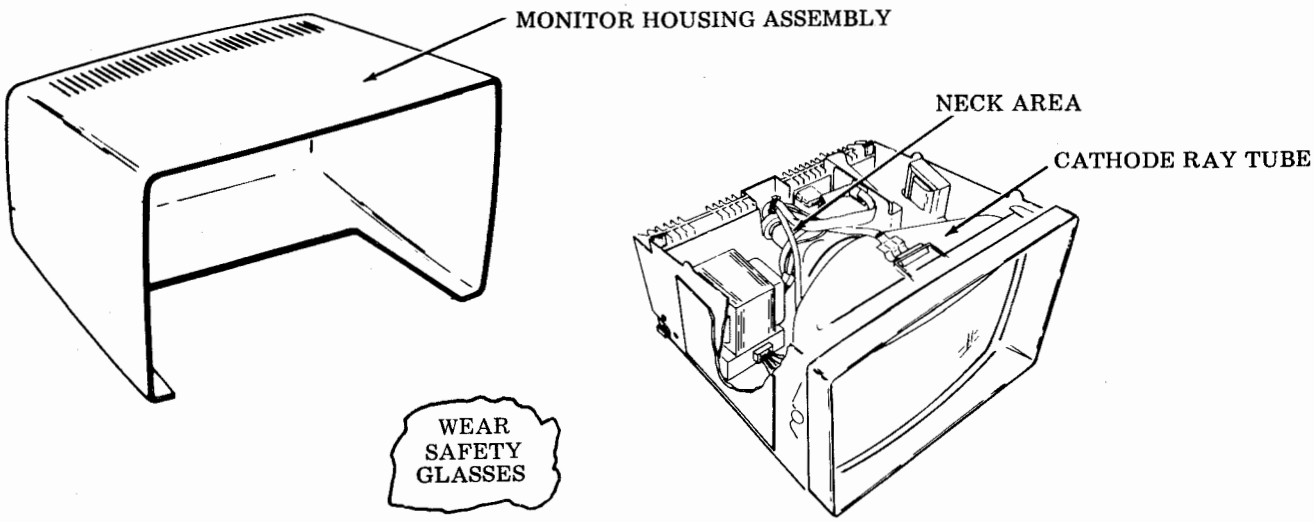

WARNING: TO AVOID POSSIBLE INTERNAL DAMAGE TO CIRCUITRY, WEAR A 346392 STATIC DISCHARGE STRAP CONNECTED TO GROUND TO ALLOW STATIC DISCHARGE BEFORE HANDLING CIRCUIT CARDS FOR REMOVAL OR REPLACEMENT. AVOID TOUCHING CIRCUIT LANDS OR COMPONENTS AS MUCH AS POSSIBLE.

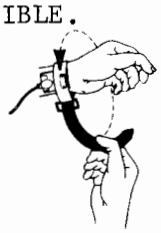

Attach static ground strap tightly to wrist.

Attach clip end of static discharge strap to frame ground.

Routine maintenance intervals for the printer are 2000 hours of service or 1 year, whichever comes first. The terminal as a whole may therefore be conveniently routined at the same intervals.

B. CABINET, PEDESTAL, AND OPCON

NOTE: Avoid cleaning methods that spread dust and debris to surrounding areas.

Clean all ventilating screens; while vacuuming, use a soft-bristled brush to remove debris.

Clean exterior surfaces:

- Wash with mild detergent solution.
- Rinse with damp cloth.
- Buff dry with soft cloth.

C. MONITOR

Clean all ventilating slots (top, bottom, and sides); clean exterior surfaces; wash, rinse, and buff.

WARNING: DO NOT USE SHARP OBJECTS, HARSH ABRASIVE CLEANING AGENTS OR SOLVENTS WHICH COULD SCRATCH OR DAMAGE PLASTIC SURFACES.

Brush and vacuum interior of the monitor.

D. MISCELLANEOUS CHECKS

Make the following checks in the terminal:
Check that all connectors are seated properly and securely.
Look for pinched or crimped wires or cables.
Check that doors and panels open and close properly.
Check that latches open easily and close securely.
Check that covers are secure.
Check that all grounding straps are mounted securely in place.

Grounding Strap Locations

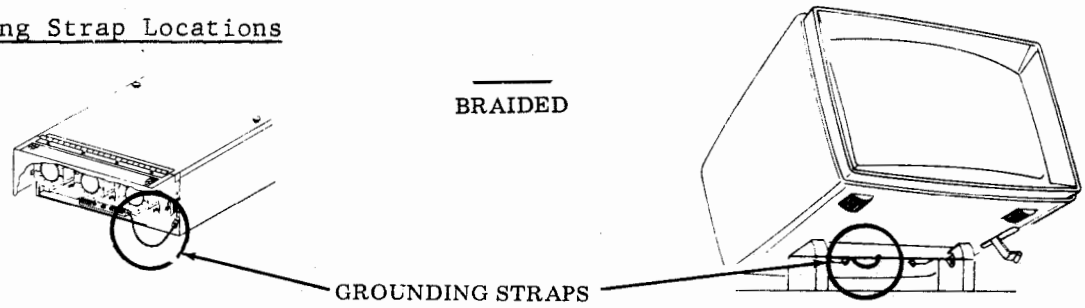

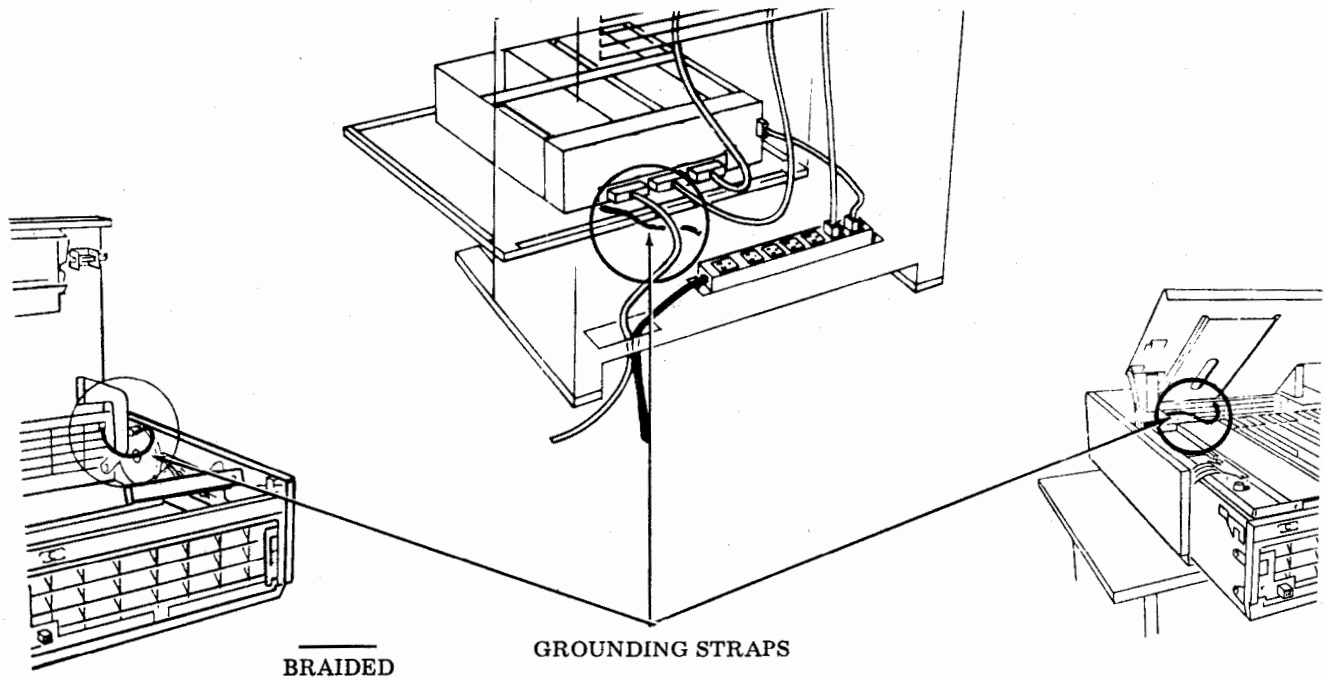

D. MISCELLANEOUS CHECKS (Cont)

Check fuses for condition and ratings (fuse ratings are critical; no higher rating than specified should be used).

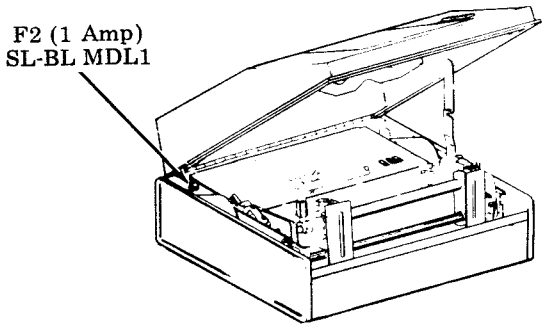

Tractor Feed Printer

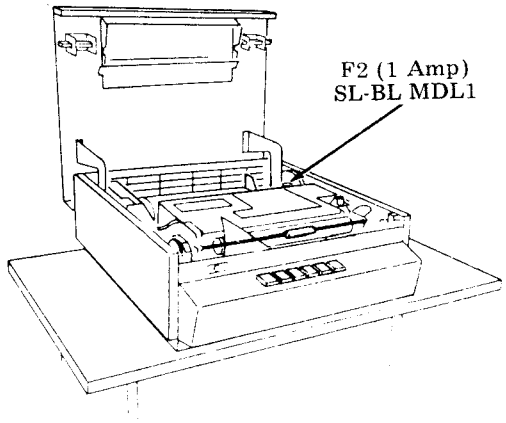

Friction Feed Printer

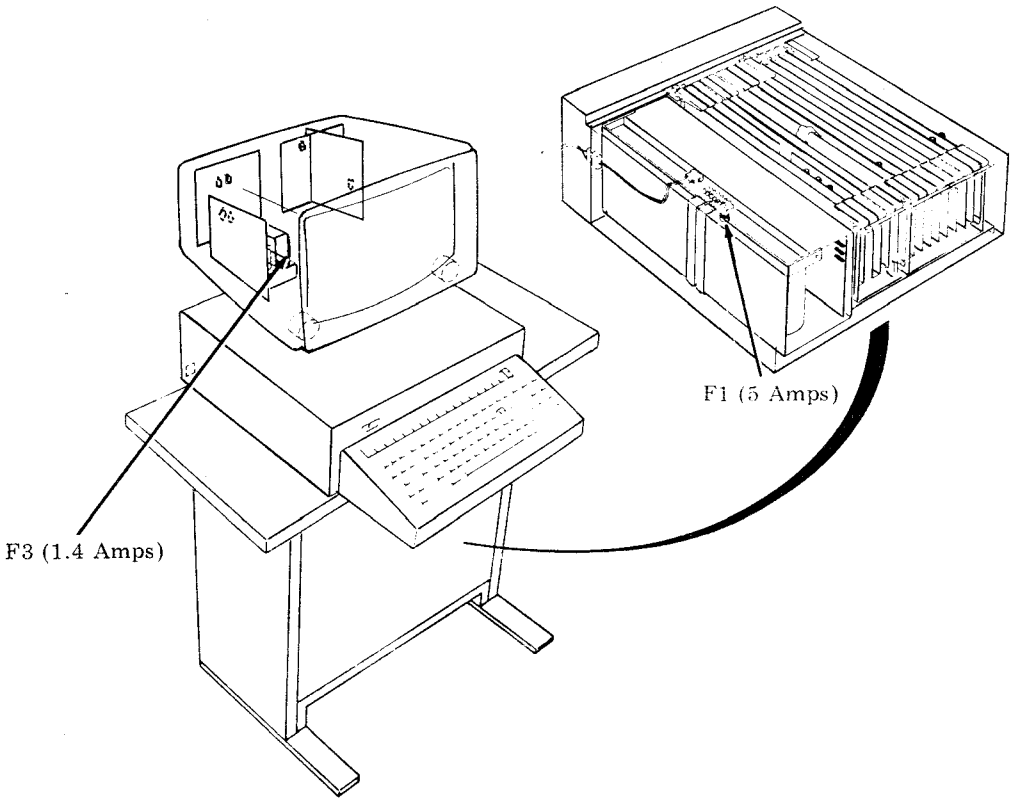

E. PRINTER ROUTINING

1. GENERAL

Printer

The printer should be routined after 2000 hours of running time or one year. Printer should be removed from the cabinet before routining is begun. See PART 7 -- COMPONENT ACCESS for printer removal.

- To prevent damage to furniture, the printer should be placed on a pad such as 124828 protective pad, or other suitable substitute.

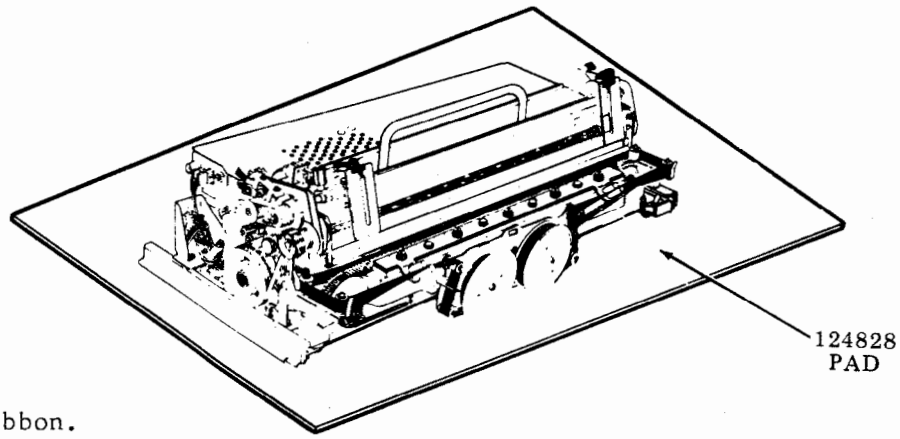

- Remove the ribbon.

2. TYPE CARRIER REMOVAL AND CLEANING

Friction Feed

Ribbon Bracket

- Remove type carrier.
- Release thumb lever on left ribbon guide bracket allowing guide to swing to the left.
- Loosen thumbscrew on the right ribbon bracket; swing bracket to the right.

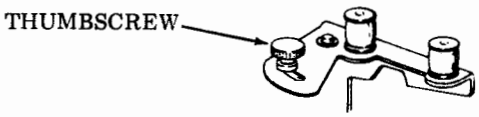

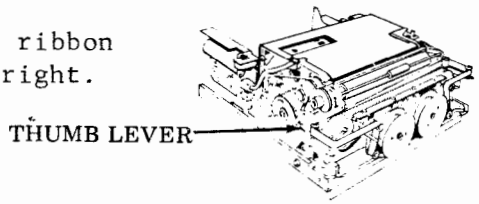

Type Carrier

- Lift up on left pulley to release spring bias. While holding arm up, lift type carrier from right pulley and remove.

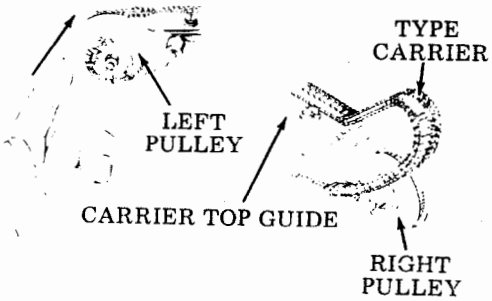

E. PRINTER ROUTINING (Cont)

2. TYPE CARRIER REMOVAL AND CLEANING (Cont)

Tractor Feed

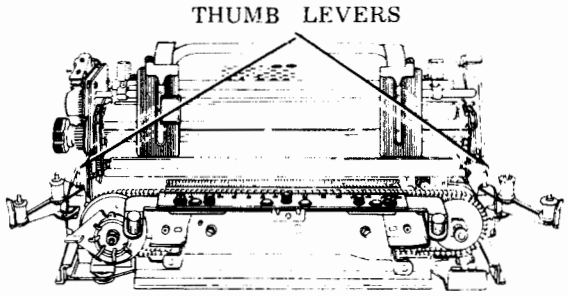

Ribbon Guide Brackets

- Release thumb levers on left and right ribbon guide brackets allowing guides to spring to sides of printer.

Carrier Top Guide (80-Column Tractor Only)

- On 80-column tractor, remove three thumbscrews and lockwashers securing carrier top guide; remove guide.

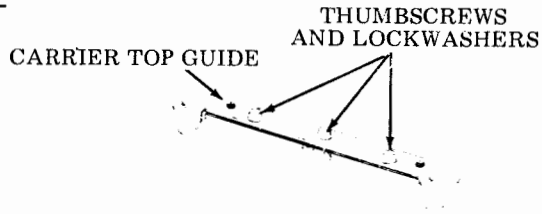

Type Carrier Removal

- Lift finger lever on left pulley and hold. Remove type carrier starting at right pulley as shown. (Release finger lever.)

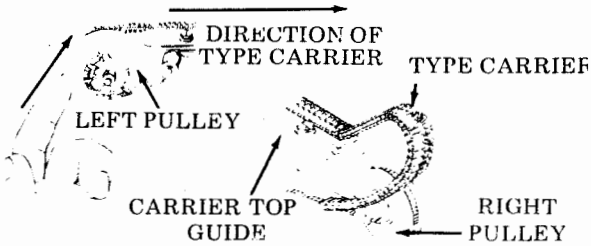

- Clean type carrier with brush and mineral spirits. Care should be taken that the customer's furniture is not damaged. Inspect type carrier. Replace any pallets that are worn, missing, or mutilated. Set type carrier aside.

3. CLEANING

- Check that the printed instructions on the printer cover are legible. Clean with cloth.

80-Column Friction Printer Labels

Label for Ribbon Loading

1. Ribbon is to wind and unwind at bottom of spool.
2. Put new spool on free-wheeling spindle.
3. Using routing shown, pass ribbon between paper and type carrier.
4. Attach ribbon to empty spool and wind until eyelet is on spool.
5. Put spool on spindle and wind up slack on free-wheeling spool.

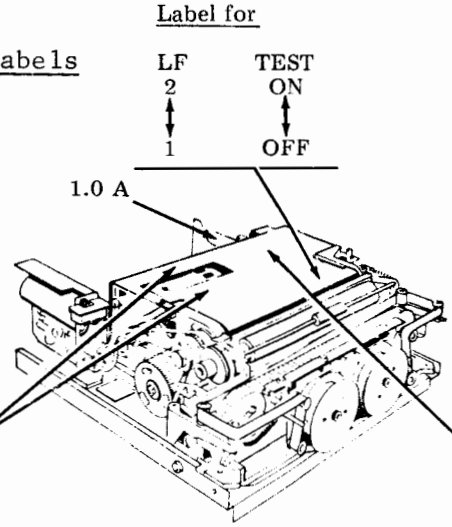

Label for Paper Loading

1. Release pressure roller and load with paper unrolling as shown.
2. Fold paper approximately 45° in either direction.
3. Rotate paper until leading edge appears under pressure roller shaft. Be sure paper is not between type pallets and ribbon.
4. Pull through approximately 12 inches of paper and align edge of paper roll.
5. Engage pressure roller with paper, insert paper through window opening and close cover.

80-Column Tractor Printer Labels

Label for Form Selection

Form Selector Setting				Color of Belt
4	3	2	1	
Length of Form				
3-1/3	2-1/2	5	10	Amber
3-2/3		5-1/2	11	Blue
4	3	6	12	Yellow
4-1/3		6-1/2	13	Brown
4-2/3	3-1/2	7	14	Red
5		7-1/2	15	Pink
5-1/3	4	8	16	Lt Green
5-2/3		8-1/2	17	Green
6	4-1/2	9	18	Lt Blue
7-1/3	5-1/2	11	22	White

Label for Ribbon Loading

1. Ribbon is to wind and unwind at bottom of spool.
2. Put new spool on free-wheeling spindle.
3. Using routing shown, pass ribbon between paper and type carrier.
4. Attach ribbon to empty spool and wind until eyelet is on spool.
5. Put spool on spindle and wind up slack on free-wheeling spool.

Label for Type Carrier Changing

1. Remove ribbon and swing ribbon guides out by pressing thumb levers.
2. Lift finger lever and remove carrier starting at right pulley.
3. Install new carrier starting at left pulley; follow above instruction in reverse.
4. Rotate carrier by hand in direction shown, aligning any protruding type pallets to prevent snagging.
5. Option switch selection should agree with font arrangement of type carrier.

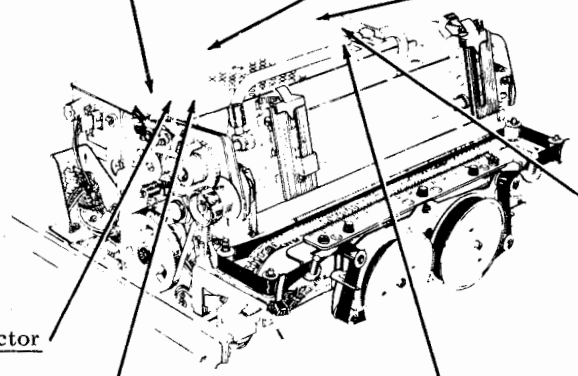

Label for Form Selector

Depress when changing belts.

Label for Idler Assembly

Loosen and move thumbscrew until idler assembly is approximately at right angles to slot.

Label for

FORMS	LF	TEST
ON	1	ON
↕	↕	↕
OFF	2	OFF

Label for Paper Loading

1. Release paper guides and open tractors.
2. Fold one form down; if multiple forms, separate.
3. Sight down paper path and thread paper, keeping to the left.
4. Close tractors and paper guides.
5. Set right tractor for paper width.
6. Set left tractor for left margin.
7. Pull knob and turn to align form.

E. PRINTER ROUTINING (Cont)

3. CLEANING (Cont)

132-Column Tractor Printer Labels

Label for Form Selection

Form Selector Setting				Color of Belt
4	3	2	1	
Length of Form				
3-1/3	2-1/2	5	10	Amber
3-2/3		5-1/2	11	Blue
4	3	6	12	Yellow
4-1/3		6-1/2	13	Brown
4-2/3	3-1/2	7	14	Red
5		7-1/2	15	Pink
5-1/3	4	8	16	Lt Green
5-2/3		8-1/2	17	Green
6	4-1/2	9	18	Lt Blue
7-1/3	5-1/2	11	22	White

Label for Ribbon Loading

1. Ribbon is to wind and unwind at bottom of spool.
2. Put new spool on free-wheeling spindle.
3. Using routing shown, pass ribbon between paper and type carrier.
4. Attach ribbon to empty spool and wind until eyelet is on spool.
5. Put spool on spindle and wind up slack on free-wheeling spool.

Label for

FORMS	LF	TEST
ON	1	ON
↕	↕	↕
OFF	2	OFF

Label for Paper Loading

1. Release paper guides and open tractors.
2. Fold one form down; if multiple forms, separate.
3. Sight down paper path and thread paper, keeping to the left.
4. Close tractors and paper guides.
5. Set right tractor for paper width.
6. Set left tractor for left margin.
7. Pull knob and turn to align form.

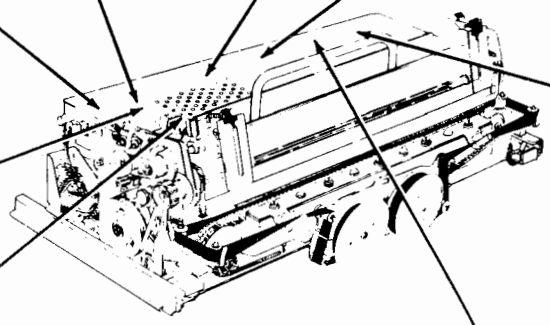

Label for Form Selector

Depress when changing belts.

Label for Type Centering

1. Disconnect AC power after printing with test switch.
2. Hold gear from rotating and turn collar clockwise for character clipped on right side and counter-clockwise for character clipped on left side.

Label for Idler Assembly

Loosen and move thumbscrew until idler assembly is approximately at right angles to slot.

Label for Type Carrier Changing

1. Remove ribbon and swing ribbon guides out by pressing thumb levers.
2. Lift finger lever and remove carrier starting at right pulley.
3. Install new carrier starting at left pulley; follow above instruction in reverse.
4. Rotate carrier by hand in direction shown, aligning any protruding type pallets to prevent snagging.
5. Option switch selection should agree with font arrangement of type carrier.

Line Feed Magnet

- Place a piece of cleaning paper between the line feed armature and pole piece; manually hold the armature against the pole piece and pull the paper out. Perform the operation twice. Discard paper.

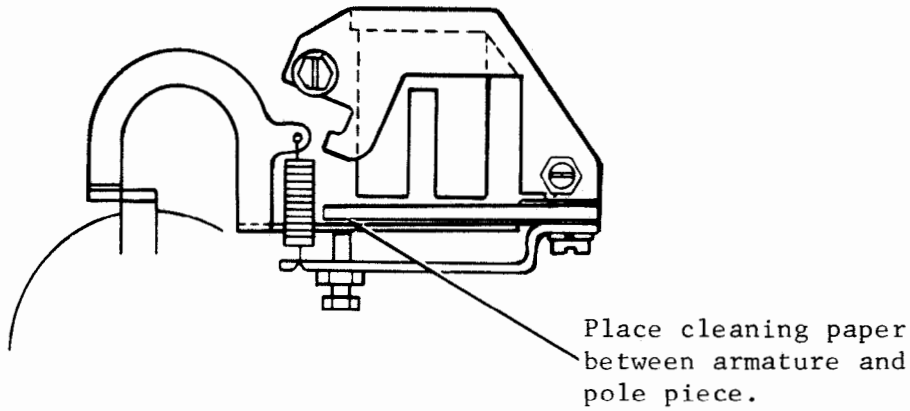

- Clean with a brush, dust and paper lint that has accumulated on the printer, inside the paper chute, on the sides, and on the front. Make sure furnishings are not damaged.

4. CHECKS

Printer Cross Shaft

- Check the fiber gear on the cross shaft for worn or chipped teeth. Check for red oxide around the bearings. At the bearings check that the inner roll does not turn on the shaft. If it does, replace the shaft. Check for play in the shaft by lifting up and down. Check for worn, dented, or pitted teeth on the right pulley. If any of these conditions exist, replace printer.

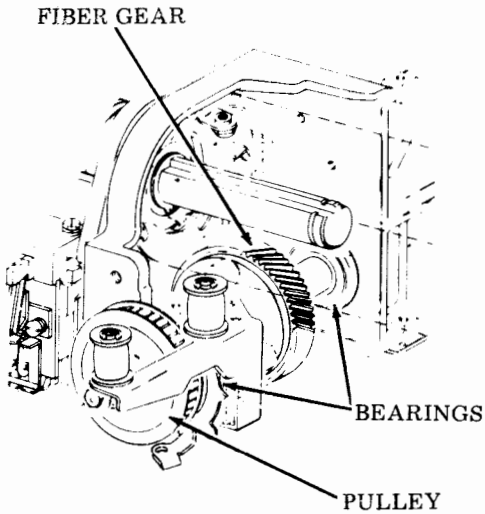

E. PRINTER ROUTINING (Cont)

4. CHECKS (Cont)

Tractor Feed Printer -- Ribbon Rollers

- Check for worn, chipped or cracked ribbon rollers; replace if necessary.

Tractor feed printers should be equipped with new style rollers. Check that the new style rollers have been properly installed with the groove and bulge downward.

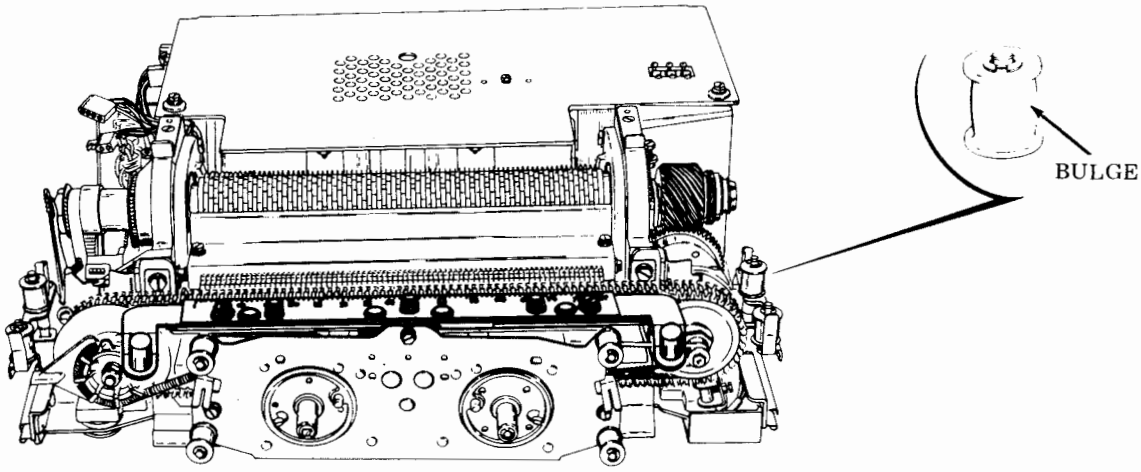

- Check the ribbon for curling. If any curling occurs on the ribbon, perform the Ribbon Tracking adjustment after the printer is in the cabinet.

Ribbon Feed Drive Belt

- Check the ribbon feed drive belt for missing teeth. Check for damage or worn areas on the ribbon discs. Replace if necessary. If belt is replaced, perform the Ribbon Feed Drive Belt adjustment.

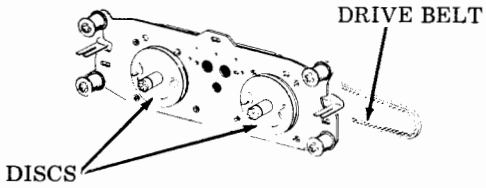

Left Sprocket

- Check for wear, dents, or pitting on the left sprocket flange. Replace if necessary.

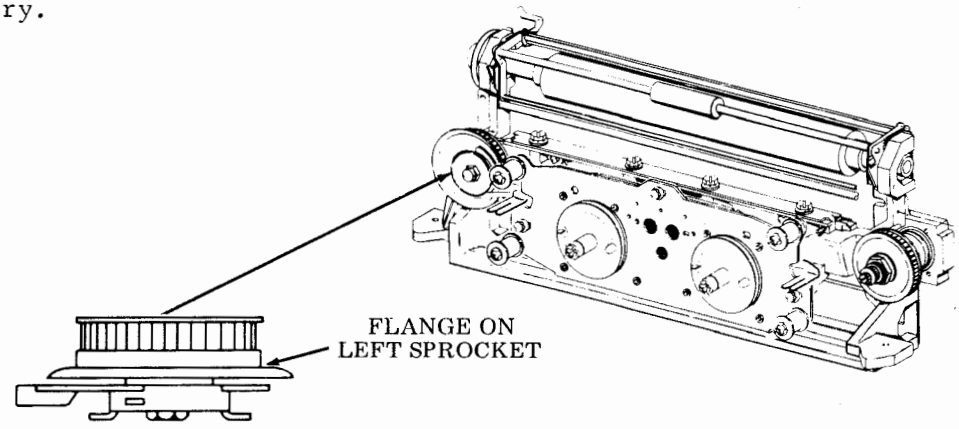

- Check for wear and pitting on the type carrier track. Make sure type carrier lubricating pad is in place and is not damaged. Replace if necessary. If front plate is replaced, perform the Backup Bar adjustment.

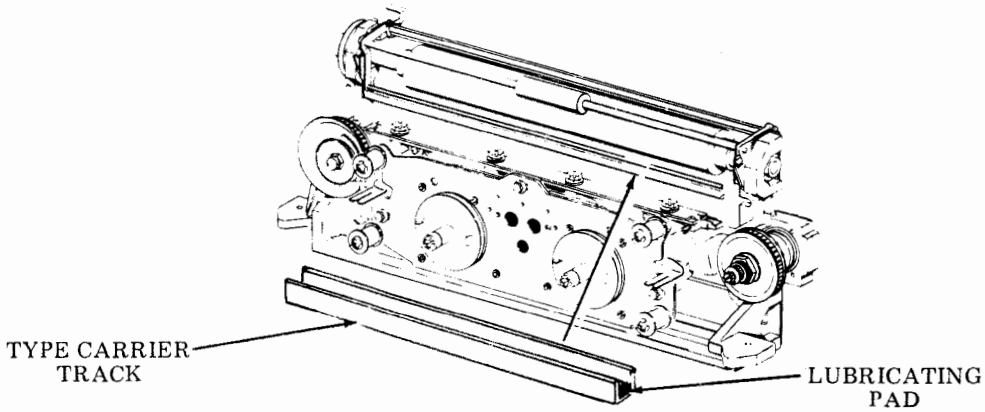

Impeller Shaft Bearing

- Rotate the impeller shaft and check that the shaft rotates freely with no binds in the two supporting bearings. Look at both ends of the shaft for any red oxide deposits near the bearing area. If red oxide is present, replace printer.

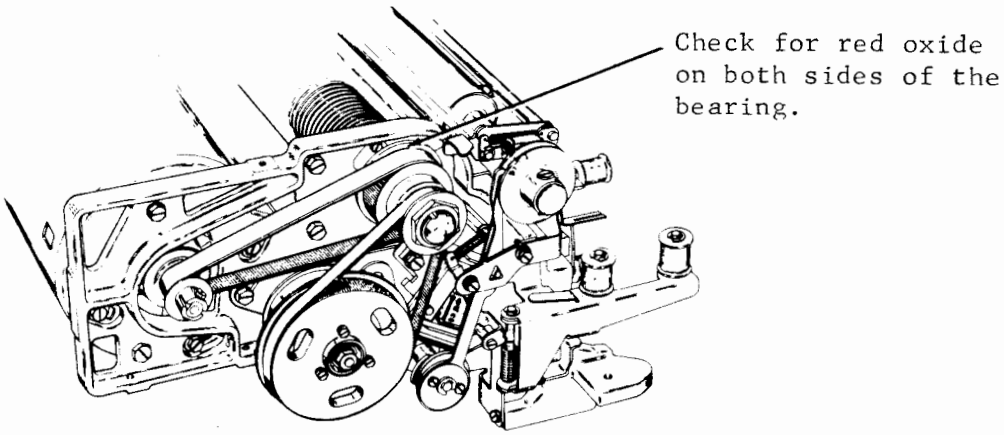

mpeller Shaft Drive Belt

- Check impeller shaft drive belt for missing teeth; replace if necessary. If belt is replaced, perform the Impeller Shaft Drive Belt Tension adjustment.

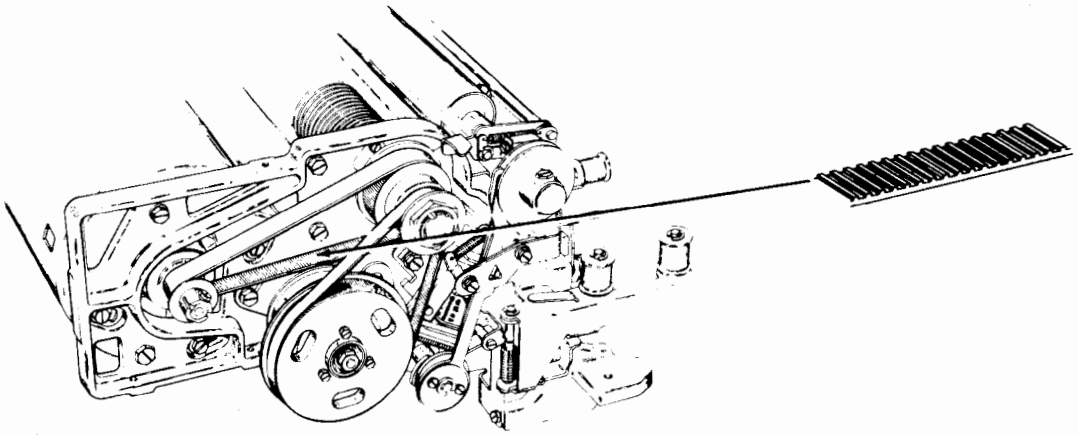

E. PRINTER ROUTINING (Cont)

4. CHECKS (Cont)

Feed Bar Drive Belt

- Check feed bar drive belt for missing teeth; replace if necessary. If belt is replaced, perform the Feed Bar Drive Belt Tension adjustment.

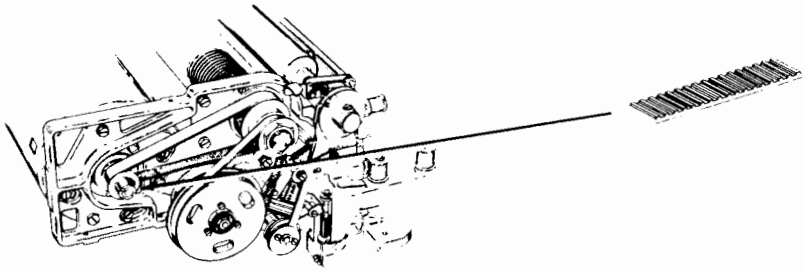

Clutch Drive Belt

- Check clutch drive belt for missing teeth; replace if necessary. If belt is replaced, perform the Clutch Drive Belt Tension adjustment.

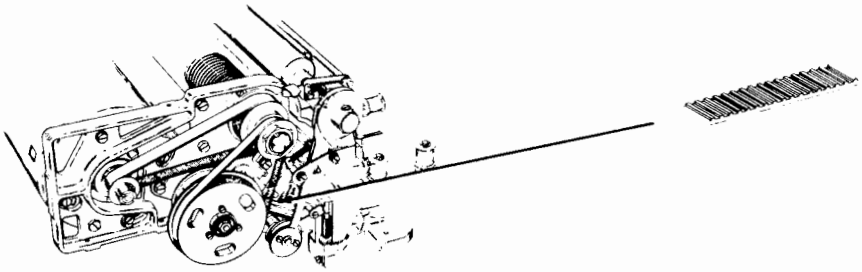

Line Feed Mechanism

- Check for excessive wear on the feed bars, gear, and roller; replace if necessary. If line feed mechanism is replaced, perform the Line Feed Bar Eccentric adjustment.

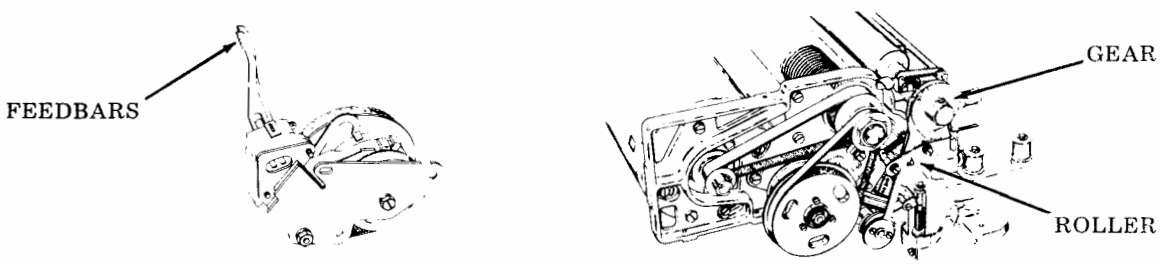

Magnet Coil

- Check that the line feed coil is securely mounted on its core. Check for discoloration due to overheating on the line feed coil casing. If either of these conditions exist, replace the line feed mechanism and perform the Feed Bar Drive Belt Tension adjustment.

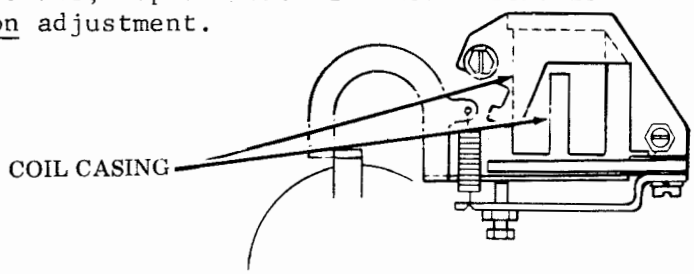

Motor Shaft

- Check for free rotation of motor shaft. Check for cracks on the motor fan. Replace if necessary. If motor fan is replaced, perform the Motor Fan Spacing adjustment.

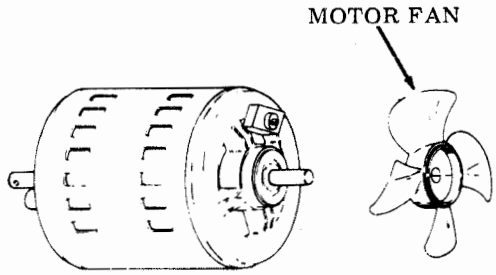

Ribbon Guides

- Check for wear, bending, cracks, or deformities in the left and right ribbon guides. If ribbon guides are replaced, perform the Left and Right Ribbon Guide (Final) adjustment.

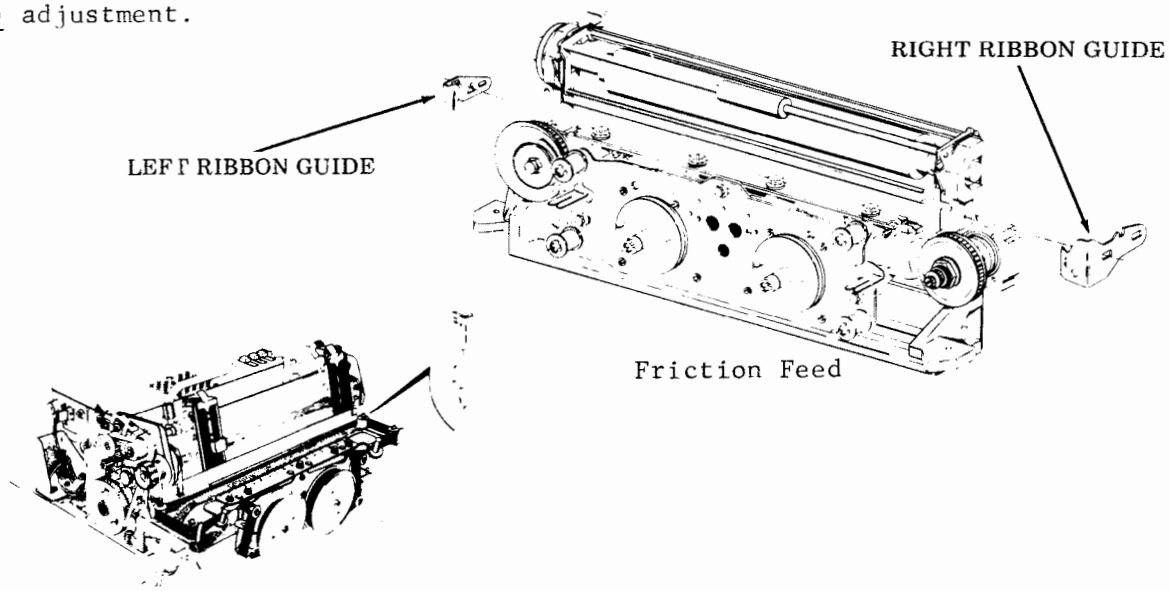

Friction Feed

Tractor Feed

Friction Feed Only -- Front Plate Rollers

- Check for excessive wear or deformities on the paper roller and pressure roller. Replace if necessary.

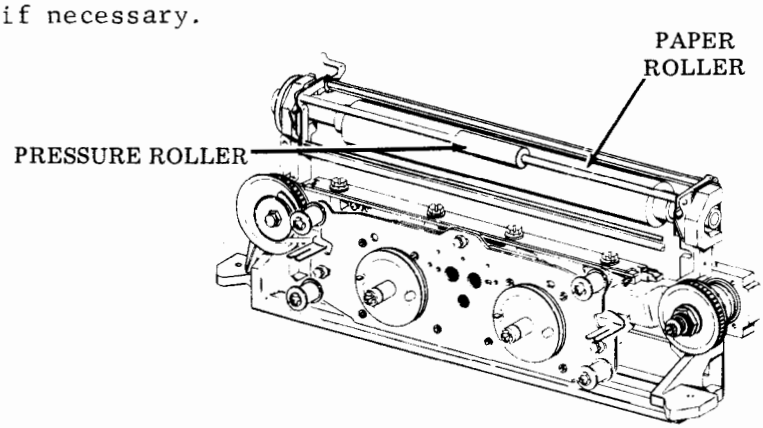

E. PRINTER ROUTINING (Cont)

4. CHECKS (Cont)

On Tractor Feed Printers

Form-Out Belt

- Check for missing teeth or worn cams on the form-out belt. Replace if necessary. If form-out belt is replaced, perform the Form-Out Contact to Belt Spacing adjustment.

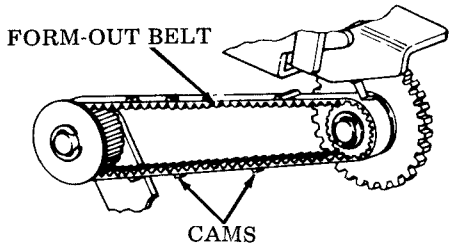

Mylar Strip

- Check for missing, distorted, or torn mylar strip tabs on the front casting assembly. Also replace any mylar strip that has a rough surface.

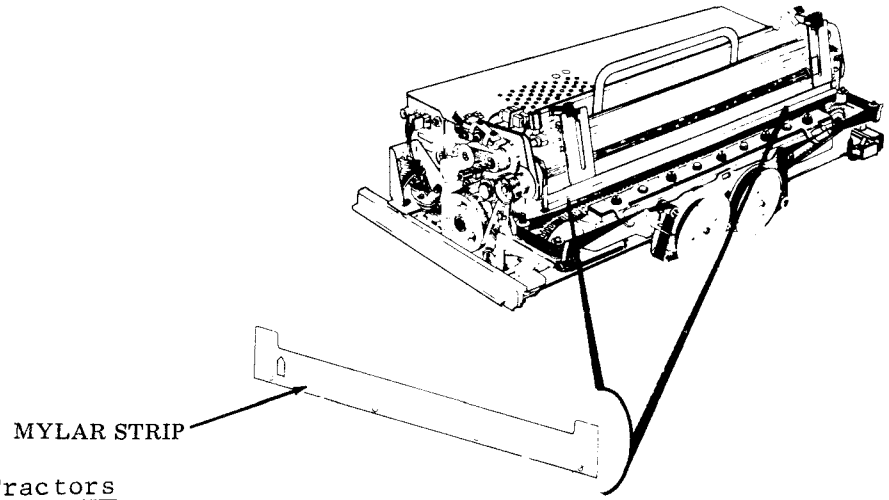

Tractors

- Check for bends, cracks, or deformities in the tractors. Check for free operation of the tractors. Check that no pins are missing on the tractors. Check the amber drive belts for tears, distortion, or mutilation. Replace if necessary. When replacing the tractors make sure that the white dots or raised marks are in line with each other horizontally across the shaft.

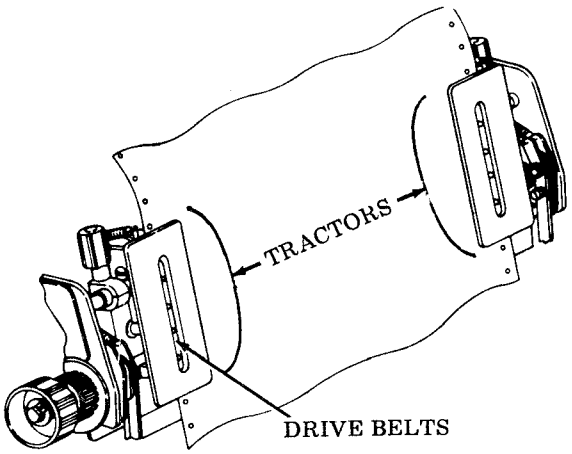

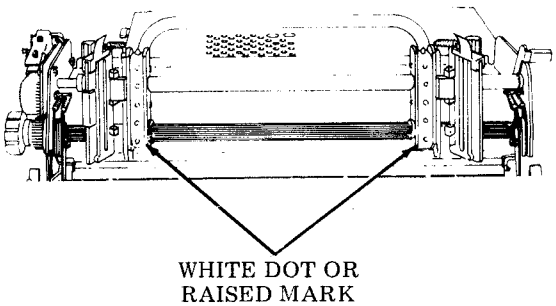

On 80-Column Printer

- Check paper-out contact arm. If it is bent, straighten it and recheck its requirement. Refer to PART 6 -- ADJUSTMENTS.

Paper-Out Contact Switch (80-Column Printer)

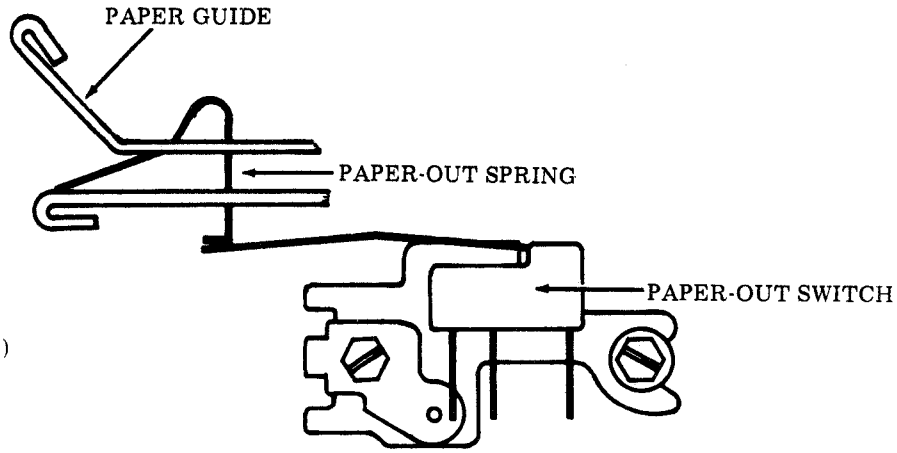

(Side View)

On 132-Column Printer

Check that paper-out contact arm is not bent and that switch operates properly. If defective, replace. If switch is replaced, perform the Paper-Out Switch adjustment.

5. LUBRICATION

a. The printer can be lubricated by positioning it in the ribbon changing (maintenance) position.
b. Lubricate the printer just prior to placing in service or before putting it in storage. Thereafter, lubricate the mechanisms every 2000 hours of running time or 1 year, whichever comes first.
c. Apply lubricant to points as indicated.
d. On small parts, a minimum amount of lubricant should be applied so that the lubricant remains on the parts and does not run off.
e. Excessive lubricant should be removed with a dry, lint-free cloth.
f. The following areas must be kept dry, free of all lubricant:
All electrical components, including terminals.
All parts normally touched by the operator, including exposed surfaces in ribbon, paper handling areas, and all large flat areas.
g. The following symbols indicate the quantity of lubricant to be used in a specified area: Symbols O1, O2, O3, etc, refer to 1, 2, 3, etc, drops of oil. The following list of symbols applies to the lubrication instructions and the type of lubricant to be used:

E. PRINTER ROUTINING (Cont)

5. LUBRICATION (Cont)

O Oil 88970
G Apply a thin film of grease; 143484 Mobil 2 - 1 lb can
145867 Mobil 2 - 4 oz tube
S Saturate felt oilers, washers, and wicks with oil.
D Keep dry, no lubricant permitted.
B Ball bearings are packed with grease and normally need no lubrication. If lubrication is required, use Teletype Part 195298 grease (Beacon 325 - 5 lb can).

CAUTION: SEVERE PERMANENT DAMAGE TO THE SINTERED TYPE AND SHIELDED TYPE BEARINGS ON THIS UNIT WILL OCCUR IF THE PRINTER IS SUBJECTED TO VAPOR DEGREASING, DEGREASING AGENTS, SUBMERGED IN DETERGENT SOLUTIONS, OR SPRAYED OR WIPED WITH CLEANING SOLVENTS OF ANY KIND.

Friction Feed Printers

Lubrication -- Front and Top

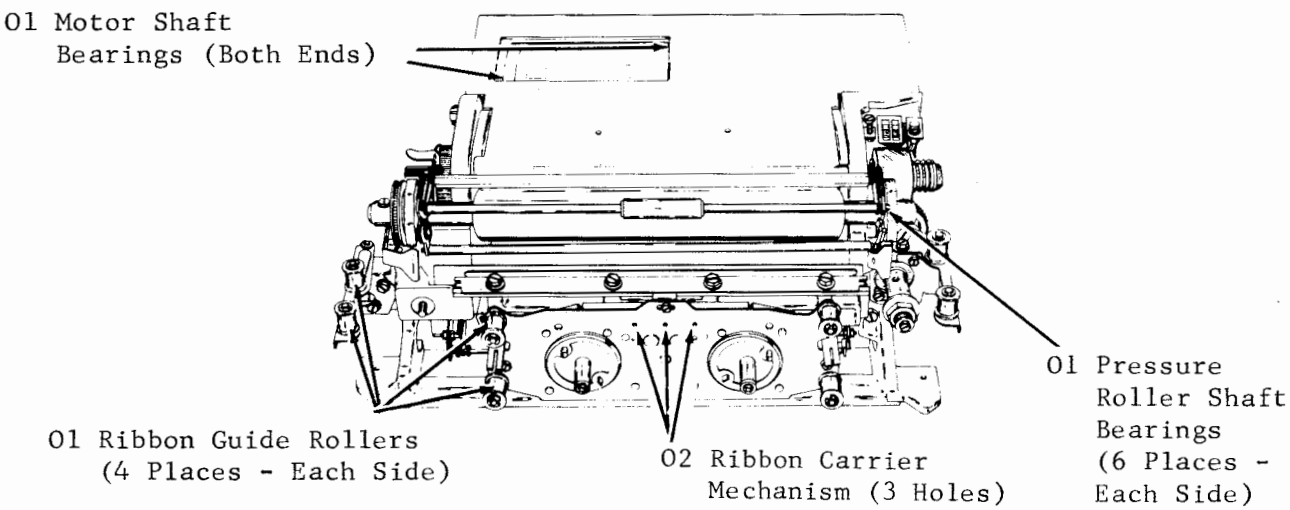

Lubrication -- Front

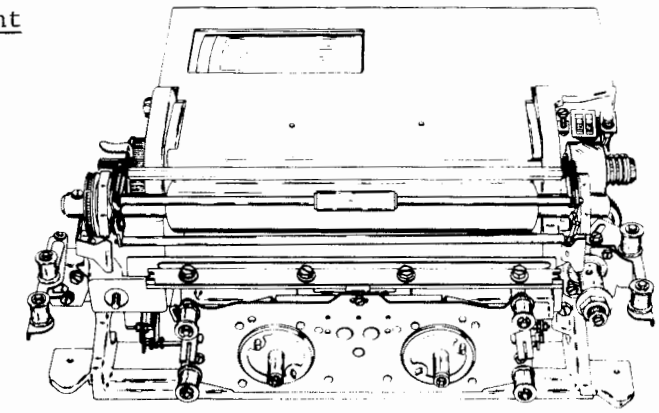

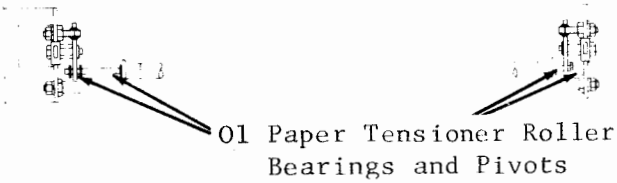

Lubrication -- Left Side

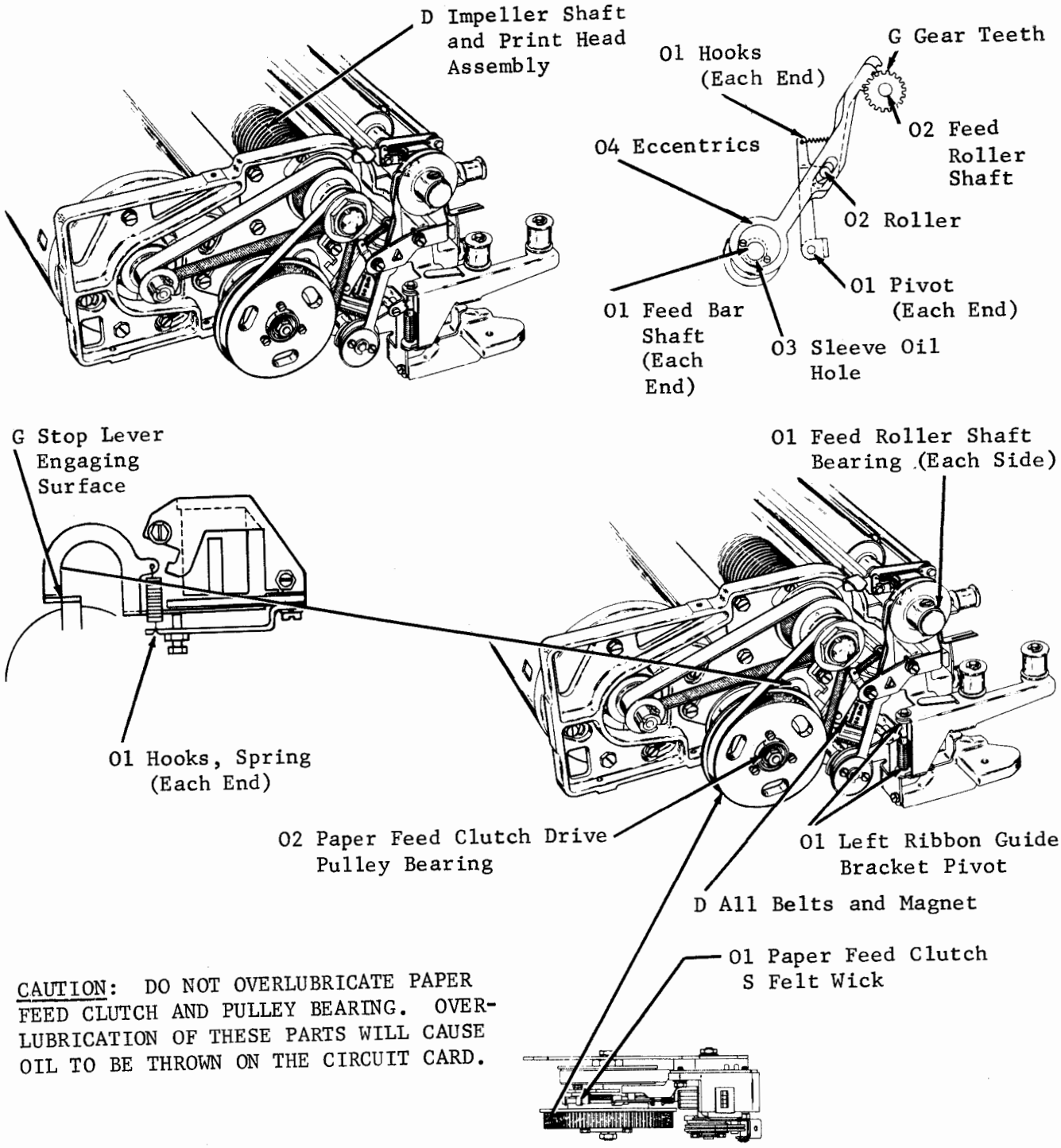

CAUTION: DO NOT OVERLUBRICATE PAPER FEED CLUTCH AND PULLEY BEARING. OVER-LUBRICATION OF THESE PARTS WILL CAUSE OIL TO BE THROWN ON THE CIRCUIT CARD.

E. PRINTER ROUTINING (Cont)

5. LUBRICATION, Friction Feed Printers (Cont)

Lubrication -- Left Side (Cont)

NOTE: Lubrication for these parts is done at the time of disassembly or extensive overhaul.

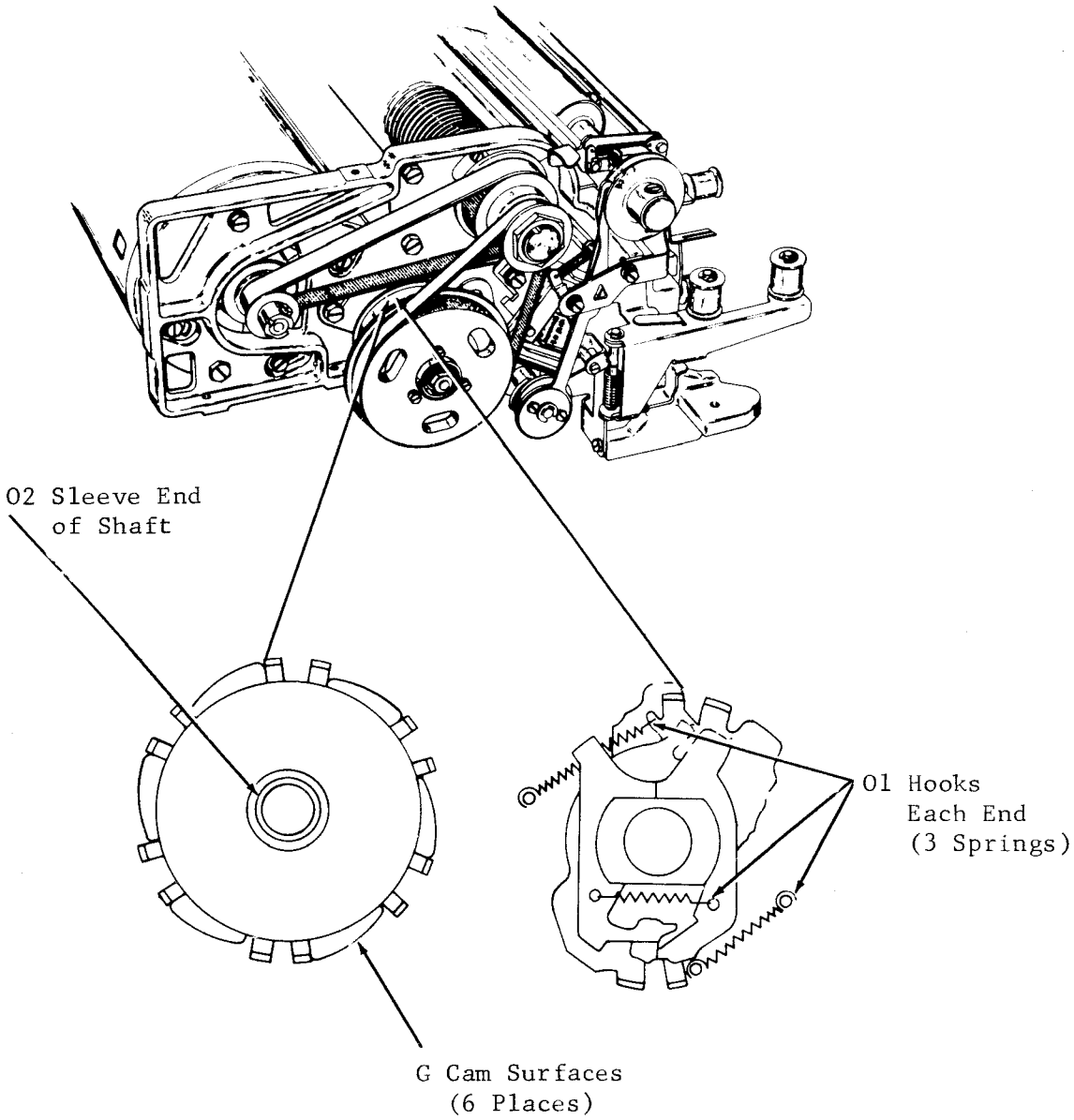

Lubrication -- Right Side

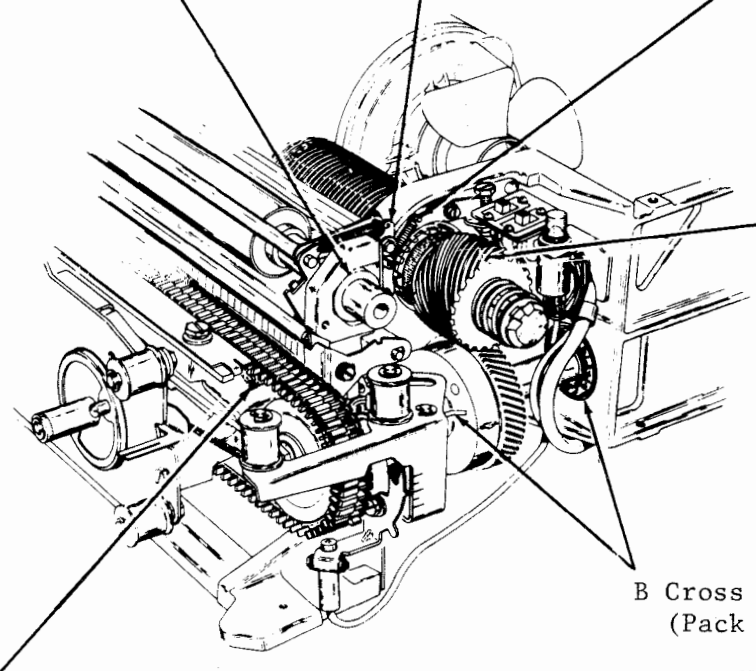

NOTE: Type carrier must be removed to gain access to the wick.

Tractor Feed Printers

Lubrication -- Front Top

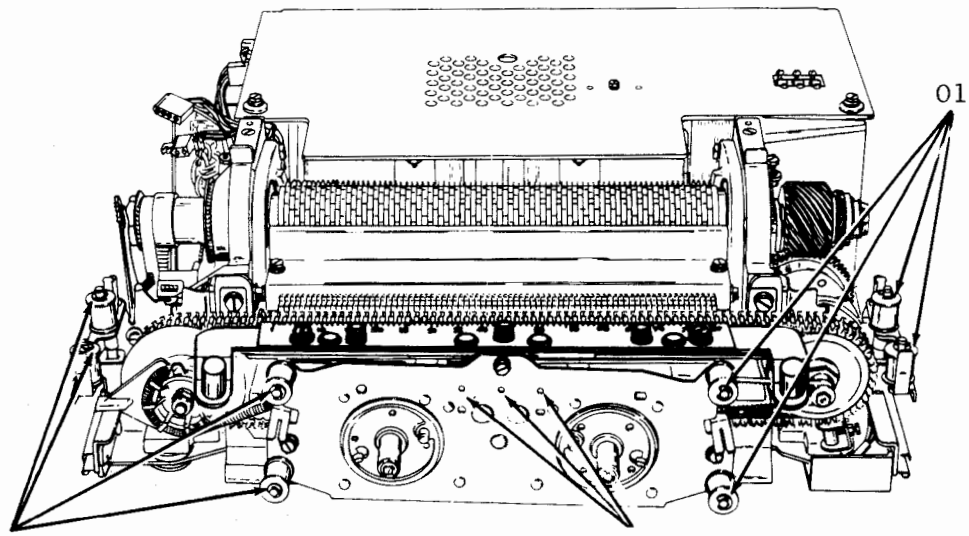

E. PRINTER ROUTINING (Cont)

5. LUBRICATION, Tractor Feed Printers (Cont)

Lubrication -- Left Side of Printer

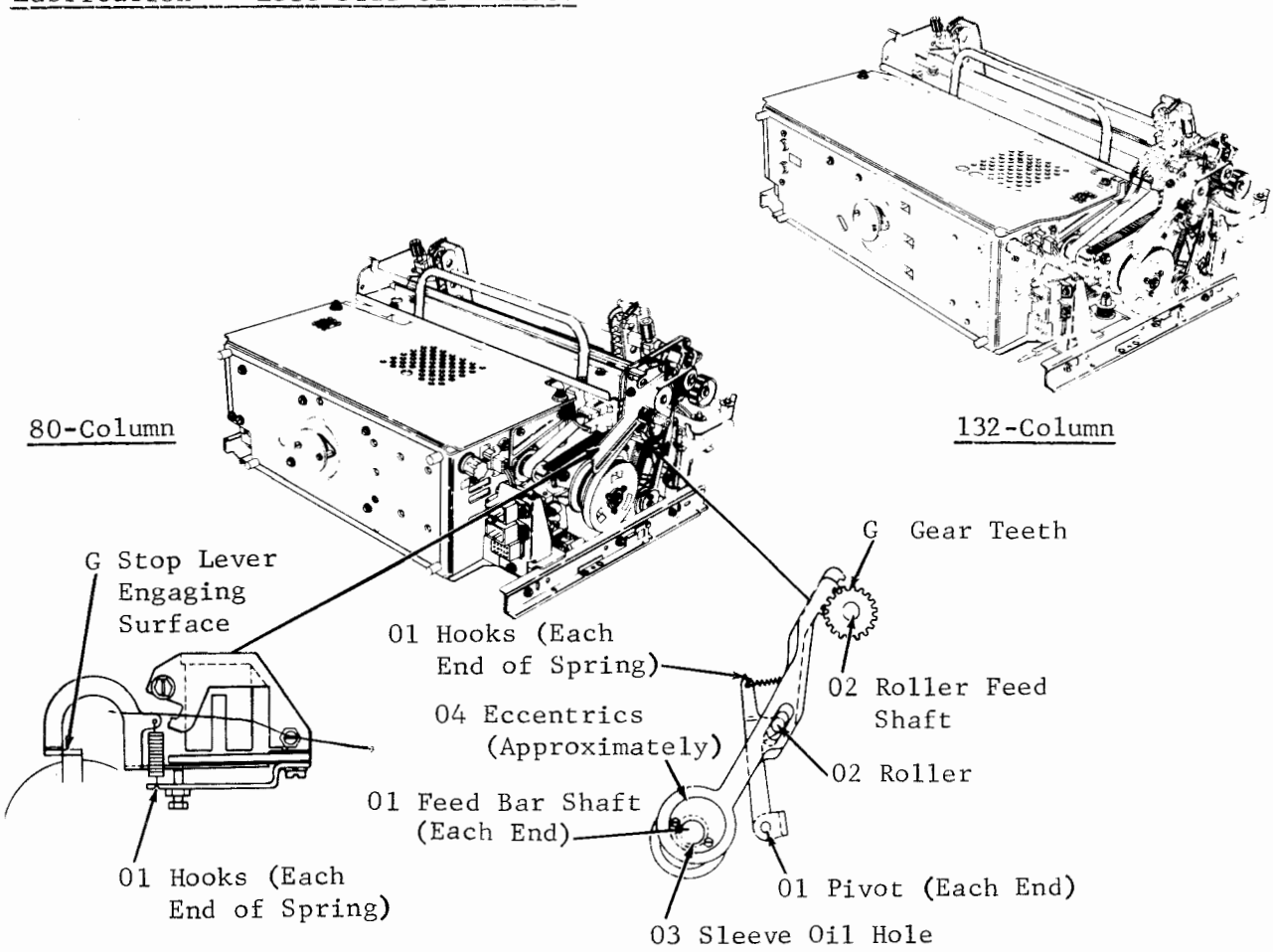

Lubrication -- Right Side of Printer

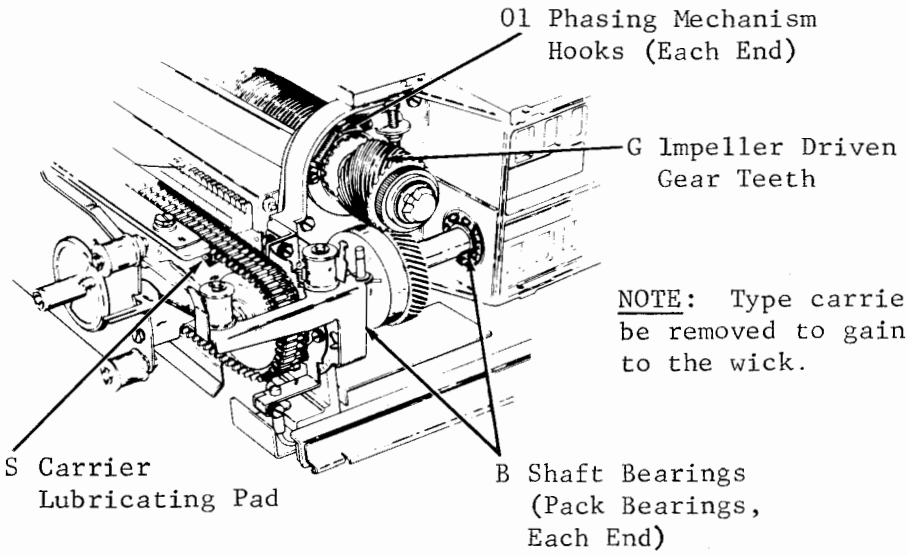

NOTE: Type carrier must be removed to gain access to the wick.

Lubrication -- Left Side of Printer

Form-Out Assembly

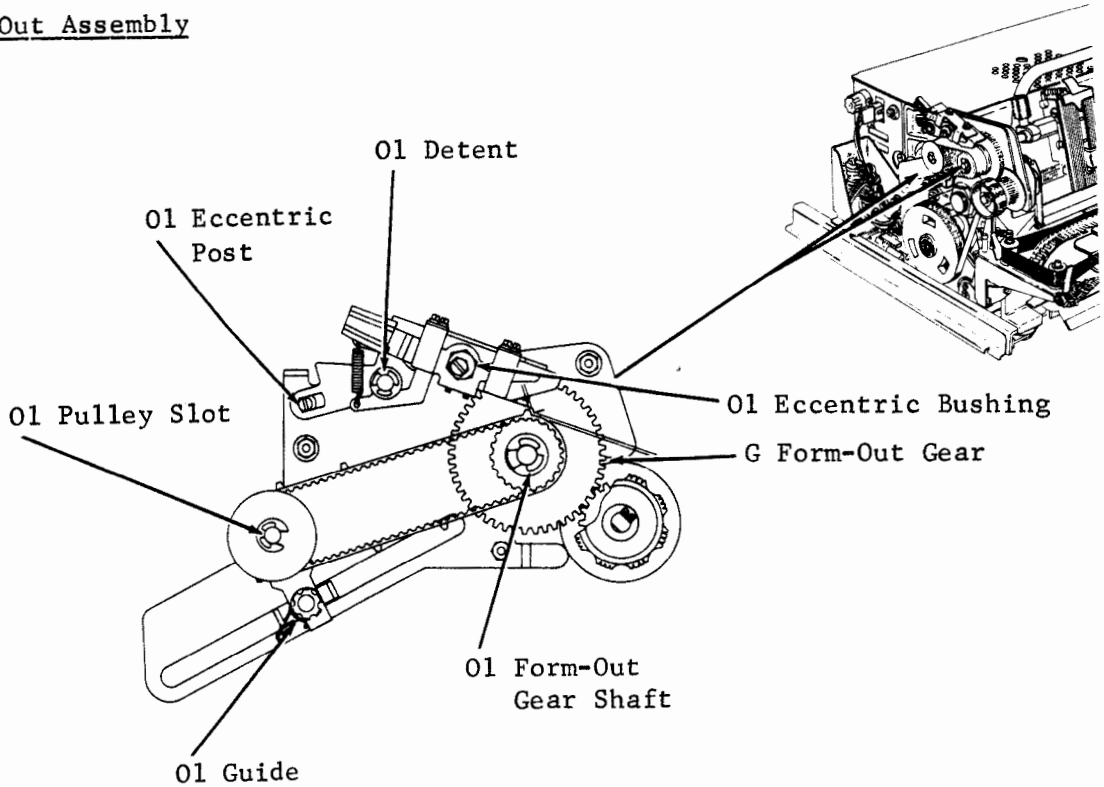

Paper Positioner Assembly

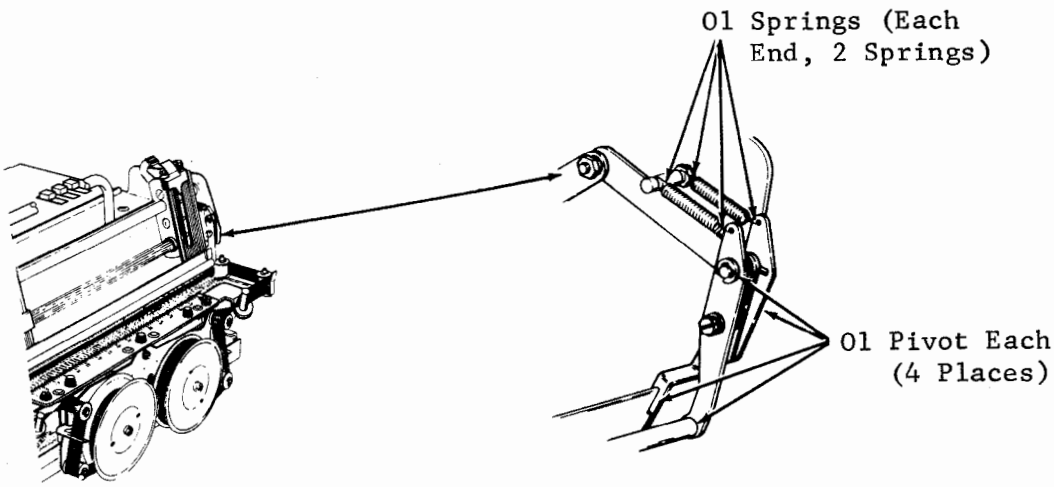

E. PRINTER ROUTINING (Cont)

Lubrication -- Fan Assembly -- Belted Type (401040)

Oil (2 drops) to be applied to nylon bearings of the fan blade assemblies only if disassembled.

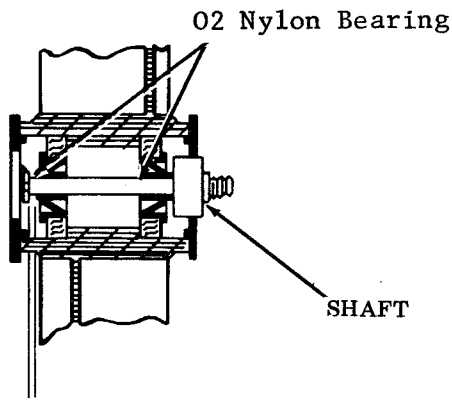

(Right Side View)

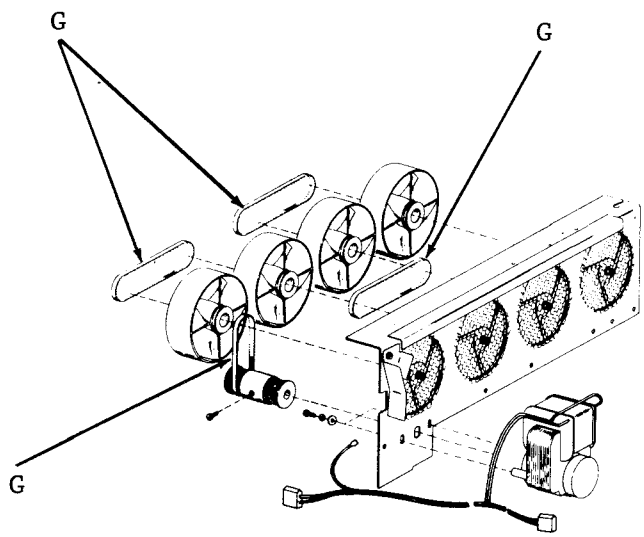

Apply a thin film of grease to the teeth of the 401048 fan belts and 401049 motor belt, using a brush. Manually rotate fan while applying grease. After ventilation assembly has been run briefly, excess grease should be removed from fans.

6. PRINTER REASSEMBLY INTO CABINET

Remount the printer in the cabinet; reconnect ac, SSI, and interlock cables.

Replace the type carrier. If lubrication is to be done, saturate the lubricating pad before replacing carrier. Before replacing the type carrier, seat all the pallets using the 402878 gauge. The gauge is marked for 80-column and 132-column. Be sure to use the proper side of the gauge to match the printer being routined. Reinstall the type carrier starting at the left pulley. Once the carrier is in place, rotate the impeller shaft by hand, one complete revolution of the carrier to seat all pallets.

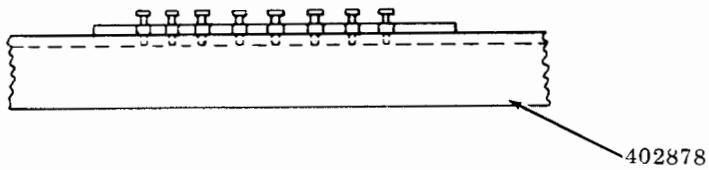

Reinstall the ribbon. See label on printer or PART 2 -- INSTALLATION for correct ribbon routing. Install paper.

7. CABINETS CHECKS

Test operation of interlock switch; pull up on switch plunger and apply power, then lower plunger. Motor should stop.

Check for air circulation in printer cabinet and make sure motor and fan are working properly.

8. PRINTER TESTING

Test the printer for proper operation. The test should include a check on the following:

- Operation of PAPER button on the printer cabinet (friction feed)
- Operation of FORMS ADVANCE button (tractor feed)
- Proper printer test message operation with test switch ON
- Simulation of low paper and paper out (friction feed) or form out (tractor feed)
- Line feed -- single or double.

Refer to PART 3 -- OPERATIONAL CHECKOUT of this manual for detailed checkout procedures. Extensive checkout should not be necessary during routine maintenance. However, the printer must be checked out sufficiently to make sure a working unit is being returned to service. For this purpose a brief off-line checkout should suffice.

During the printer test, the print quality must be examined. Printed copy should have no smudges; characters should not be clipped on either side; no characters should be missing; characters should be clear.

Return the unit to service.

PART 9 -- ACCESSORIES AND SUPPLIES

INDEX

		PAGE
1.	40PWU101 PAPER WINDER	2
2.	40AB101/AA ANSWER BACK	2
3.	401200 COPYHOLDER	2
4.	345630 EIA SWITCH ASSEMBLY	3
5.	PAPER GUIDE	3
6.	408050 VENTILATION ASSEMBLY -- BELTLESS	4
7.	TYPE CARRIERS FOR MODEL 40 PRINTERS	5
8.	FORM BELTS FOR TRACTOR FEED PRINTERS	6
9.	PRINTER RIBBON	6
10.	SPINDLE	7
11.	MULTICOPY AND SINGLE COPY WITHOUT SPROCKET HOLES	7
12.	MODIFICATION KIT TO PRINT ON MULTI-PLY FORMS WITHOUT AN INK RIBBON	7
13.	ATTENDANT SELECTABLE OPTIONS	8
14.	ATTENDANT SELECTABLE FEATURES	9
15.	341910 MODEL 40 COMPONENTS CARRYING CASE	9
16.	AUDIBLE ALARM AND ANSWER BACK ON 40/3 TERMINALS	10
17.	20/60 MA INTERFACE	11
18.	115 V OUTPUT -- 100 V INPUT MODIFICATION	11
19.	NEW TYPE TILT MECHANISM	12
20.	PREPARATORY SEND MODE AND EVEN PARITY GENERATION DETECTION	12
21.	CONNECTOR ADAPTER FOR CURRENT LOOP INTERFACE	12
22.	DC1, DC3, AND EOT FEATURES TO 410674 CARD	13
23.	FAN ASSEMBLY GUARD	13
24.	MOUNTING AND STORAGE FACILITIES FOR CABLES IN CABINET	13
25.	403594 MODIFICATION KIT FOR MONITOR/POWER SUPPLY COMPATIBILITY	13
26.	TSM 7810S LINE MONITOR DATA DISPLAY TEST SET	15
27.	402325 MODIFICATION KIT PROVIDES ALTERATION OF LINE DISCONNECT, REVERSE CHANNEL, AND MOTOR CONTROL FEATURES IN 40/2 APPLICATIONS	18
28.	402320 MODIFICATION KIT ALLOWS OPERATION OF ISOCRONOUS TERMINALS WITH SYNCHRONOUS DATA SETS IN 40/2 APPLICATIONS	18
29.	402178 MODIFICATION KIT ALLOWS INTERFACE OF 40/2 TERMINALS TO 113A OR 113D TYPE DATA SETS	18
30.	402315 MODIFICATION KIT CHANGES CIRCUIT CARD 410001 INTO 410018, AND 402316 MODIFICATION KIT CHANGES CIRCUIT CARD 410009 INTO 410018 FOR DESTRUCTIVE SCROLLING OPERATION IN 40/1, 40/2, AND 40/3 APPLICATIONS	18

PART 9 — ACCESSORIES

1. 40PWU101 PAPER WINDER

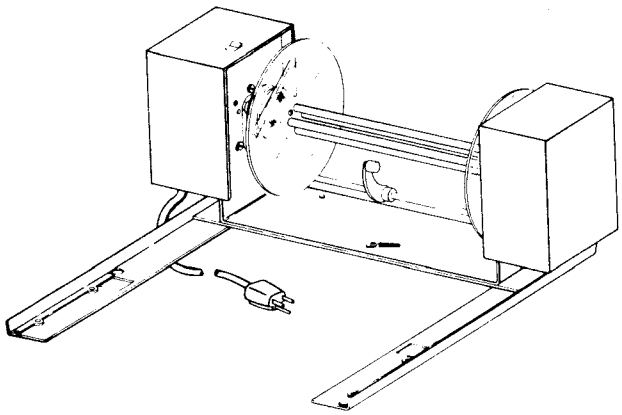

The 40PWU101 paper winder is a self-contained unit. It is operable with a friction feed printer operating at a line feed rate of 5.2 lines per second or less, and is recommended for single-copy paper only.

Additional information can be found in Specification 50817S.

2. 40AB101/AA ANSWER-BACK

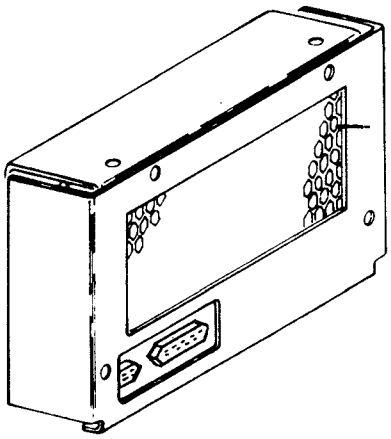

The 40AB101/AA is an electronic station identification accessory for use with a Model 40 terminal (requires 403404 answer-back cable assembly).

Additional information can be found in Shop Manual 352, Part 11 and Specification 50865S.

3. 401200 COPYHOLDER

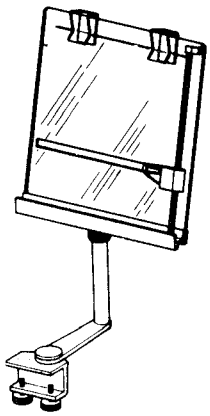

The 401200 copyholder mounts on a cabinet (pedestal type) and provides a means of conveniently holding pages from which the attendant is preparing copy.

Additional information can be found in Shop Manual 352, Part 9.

4. 345630 EIA SWITCH ASSEMBLY

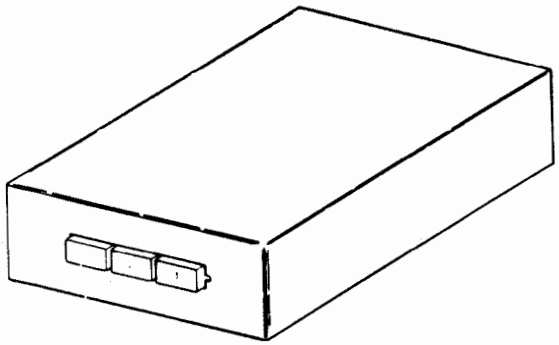

The EIA (Electronic Industries Association) switch assembly (345630) provides a method of interconnecting five data terminals (EIA type) into three operating modes.

Additional information can be found in Specification 50808S.

5. PAPER GUIDE

The 407200 modification kit is used to equip early production 80-column tractor feed printer cabinets, 40CAB351 and 40CAB352 series, to facilitate handling single-ply fan.

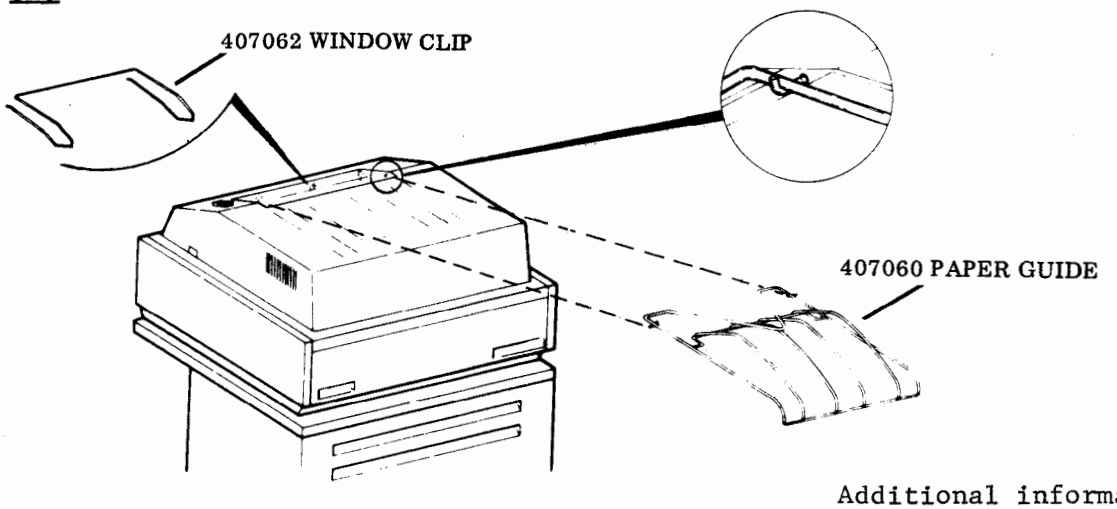

Additional information can be found in Specification 50838S.

6. 408050 VENTILATION ASSEMBLY -- BELTLESS

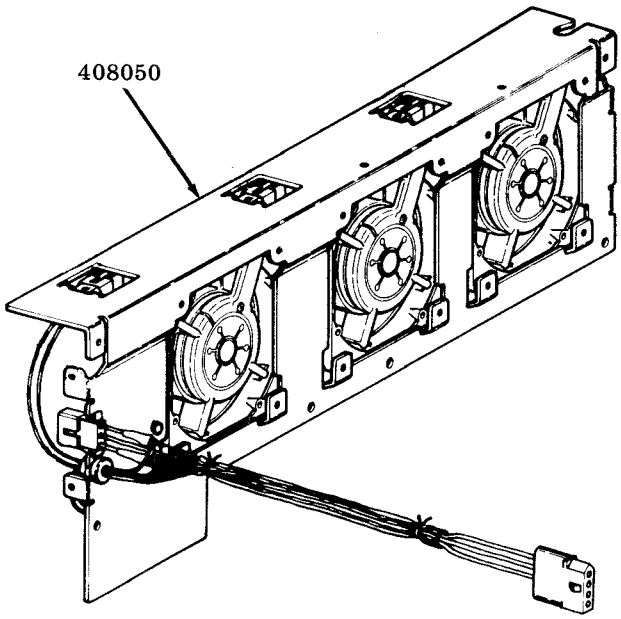

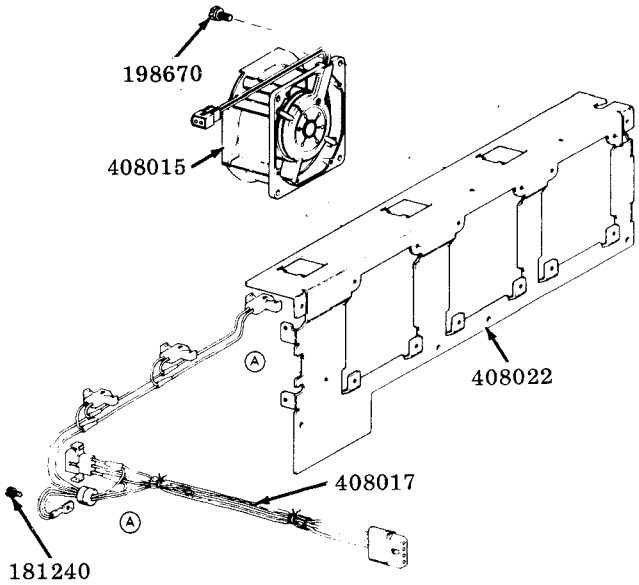

Applications

408050 ventilation assembly is used on 40CAB201/AB logic adjacent cabinet and 40CAB902/AB. Refer to Specification 50820S.

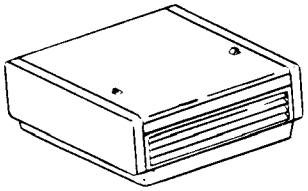

408051 modification kit (includes 408050 ventilation assembly) is used on 40CAB251/AB logic under monitor cabinet. Refer to Specification 50820S.

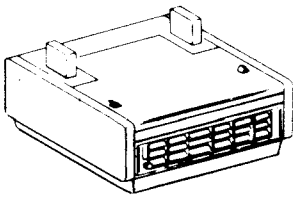

408053 modification kit (includes 408050 ventilation assembly) is used on:

408054 modification kit (includes 408050 ventilation assembly) is used on:

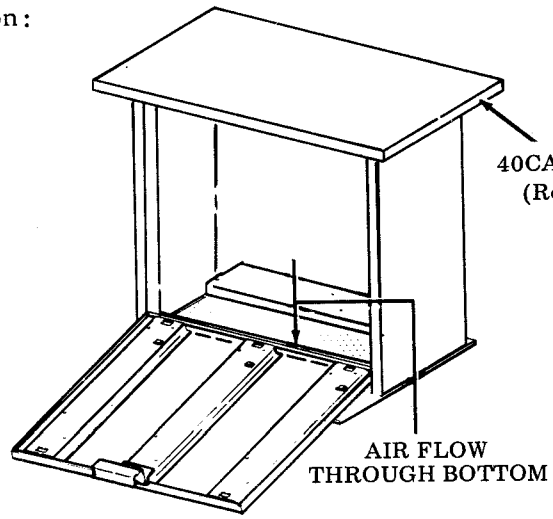

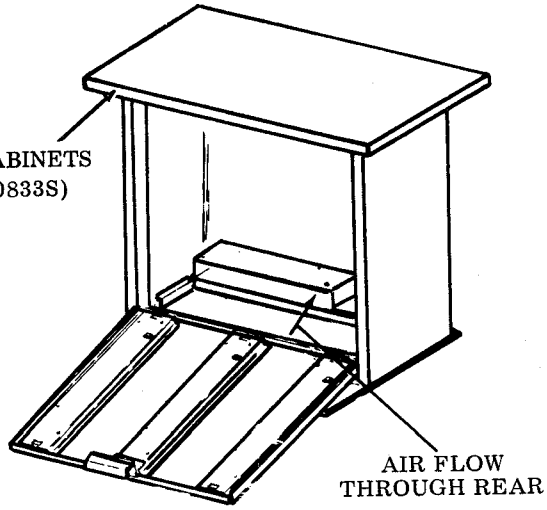

7. TYPE CARRIERS FOR MODEL 40 PRINTERS

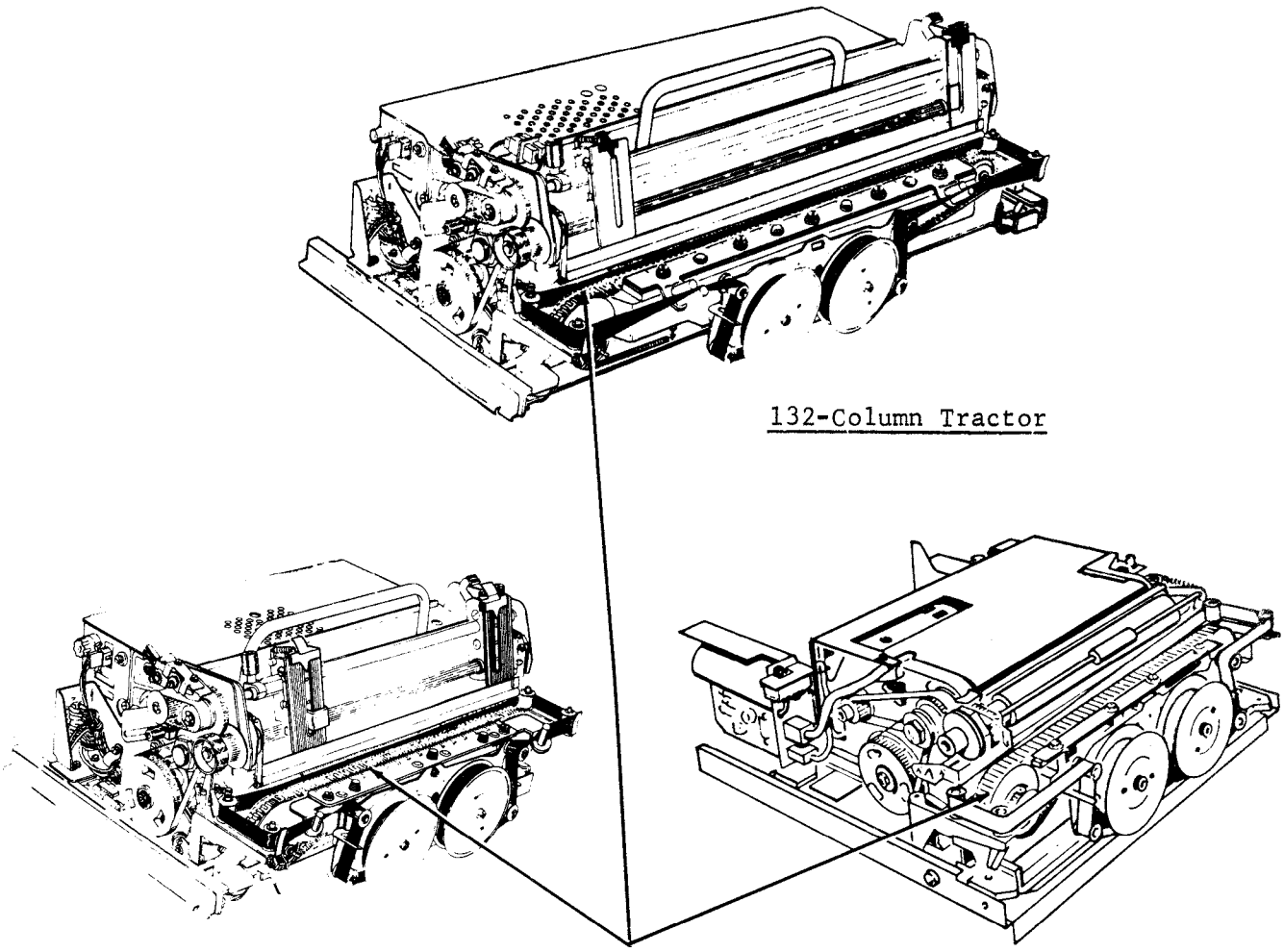

TYPE CARRIER ASSEMBLY NO.	PRINTER USED ON	ARRANGEMENT DESIGNATION	DESCRIPTION
400645	80-Column	"AA"	Monocase
400629	80-Column	"AB"	Up/Low
* 400774	80-Column	"AC"	Weather
400775	80-Column	"AD"	Line Drawing
400776	80-Column	"AF"	Fractions in One-Eighths -- Up/Low
400777	132-Column	"AG"	Up/Low
400778	80-Column	"AH"	Large Gothic W/Fractions
400779	80-Column	"AP"	Fractions in One-Eighths -- Up/Low
400780	132-Column	"AL"	Monocase
400781	80-Column	"AK"	Katakana -- Up/Low
400782	132-Column	"AR"	Katakana -- Up/Low
400783	132-Column	"AM"	Up/Low EBCDIC
400784	80-Column	"AN"	Up/Low EBCDIC
400785	80-Column	"AQ"	Monocase EBCDIC
400887	132-Column	"AS"	Monocase EBCDIC

*Compatible keytops can be found in 403596 set of parts.

8. FORM BELTS FOR TRACTOR FEED PRINTER

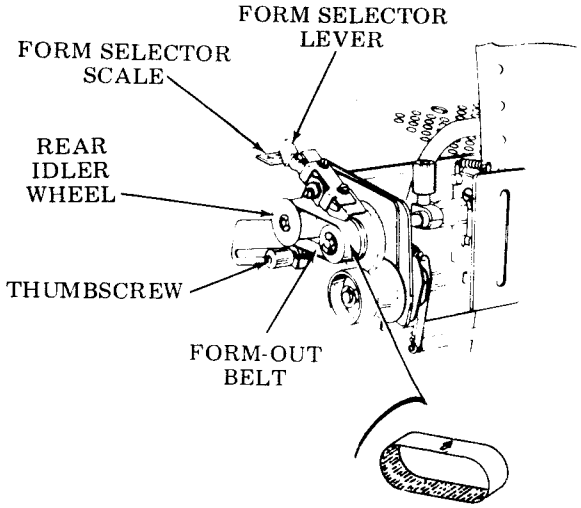

The table below shows the color of belt, part number and form length at each of the four selector settings.

The complete set of belts is packaged as Teletype Part 402586. Frequently used (*) belts are packaged as Teletype Part 402587. If not specified, 402572 is provided.

†Form Selector Setting				TELETYPE Part Number	Color
1	2	3	4		
Form Length (inches)					
10 (25.4)	5 (12.7)	2-1/2 (6.4)	3-1/3 (8.5)	*402571	Amber
11 (27.9)	5-1/2 (14.0)	2-3/4 (7.0)	3-2/3 (9.3)	*402572	Dk. Blue
12 (30.5)	6 (15.2)	3 (7.6)	4 (10.2)	*402573	Yellow
13 (33)	6-1/2 (16.5)	3-1/4 (8.3)	4-1/3 (11.0)	402574	Brown
14 (35.6)	7 (17.8)	3-1/2 (8.9)	4-2/3 (11.9)	*402575	Red
15 (38.1)	7-1/2 (19.1)	3-3/4 (9.5)	5 (12.7)	402576	Pink
16 (40.6)	8 (20.3)	4 (10.2)	5-1/3 (13.6)	402577	Lt. Green
17 (43.2)	8-1/2 (21.6)	4-1/4 (10.8)	5-2/3 (14.4)	*402578	Dk Green
18 (45.7)	9 (22.9)	4-1/2 (11.4)	6 (15.1)	402579	Lt. Blue
22 (55.9)	11 (27.9)	5-1/2 (14.0)	7 1/3 (18.6)	402580	White

† Since printers may have vertical line spacing of 3, 4, 6 or 8 per inch, all form lengths shown in the table may not be compatible. To determine compatibility for proper form registry the following formula may be applied

NOTE: *Measurements in parentheses are in centimeters unless stated in other metric units.*

FL (Form Length) x L (lines/inch spacing) = Whole Number

If the result is not a whole number, the form may not be used with a given line spacing. Example:

FL = 3.25" L = 6 lines/in.
(3.25) x (6) = 19.5 Not compatible

FL = 3.25" L = 8 lines/in.
(3.25 x (8) = 26 Compatible

9. PRINTER RIBBON

TELETYPE AUTHORIZED RIBBON SUPPLIERS

Teletype Corporation (312-982-2000)
Specify part number: TP402444

Addressograph-Multigraph Corp. (312-527-2025)
443 N. Wabash
Chicago, Illinois 60611
OFFICE SUPPLIES DIVISION
Specify part number: 120-2230-123R Teletype M40

Roytype (312-266-5835)
100 W. Erie
Chicago, Illinois 60610
Specify part number: Roytype Park Lane R1 nylon 1/2" x 33 yds.

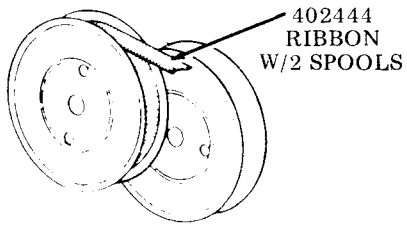

10. SPINDLE

The 405905 modification kit is intended for field maintenance when it becomes necessary to replace the 400552 spindle (red) which is no longer available.

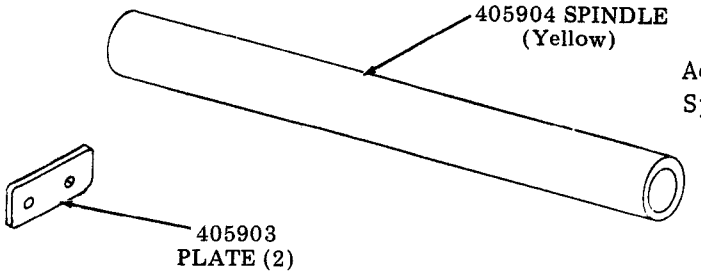

Additional information can be found in Specification 50819S.

11. MULTICOPY AND SINGLE COPY WITHOUT SPROCKET HOLES

The 403380 modification kit provides the necessary parts to equip a Model 40 friction feed printer and associated cabinet to handle multicopy roll (original and two copies) or single copy fanfold paper without sprocket holes.

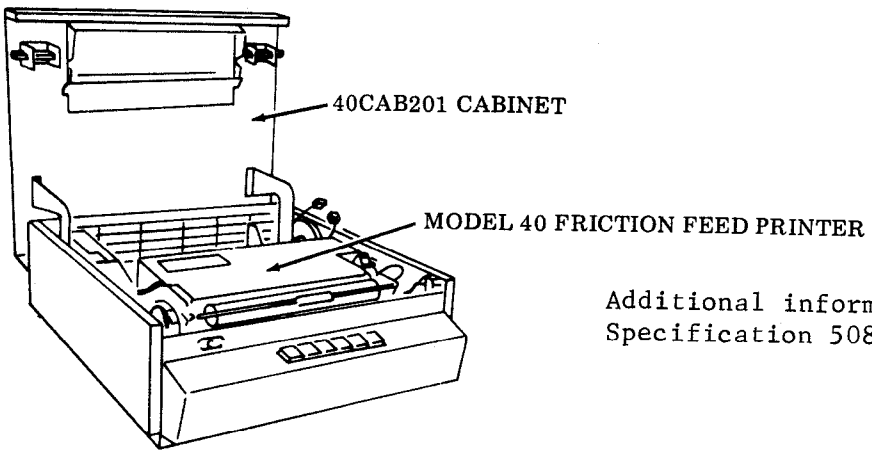

Additional information can be found in Specification 50815S.

12. MODIFICATION KIT TO PRINT ON MULTI-PLY FORMS WITHOUT AN INK RIBBON

The 402850 modification kit provides the necessary parts to convert a Model 40 tractor feed printer (80-column) for printing on multi-ply forms without an ink ribbon.

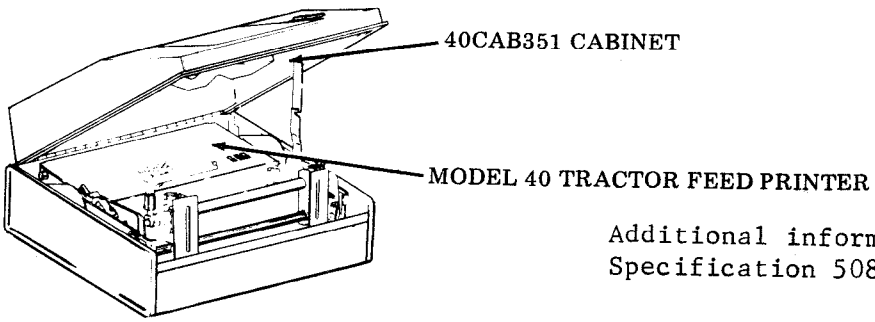

Additional information can be found in Specification 50847S.

13. ATTENDANT SELECTABLE OPTIONS

The 403400 modification kit is designed to provide a means of switching between two sets of interface options for the 40C204 Controller (40/2). The switch for option selection is available to the terminal attendant. A second switch is provided for selecting either half or full duplex operation in the event it is required in both sets of interface options.

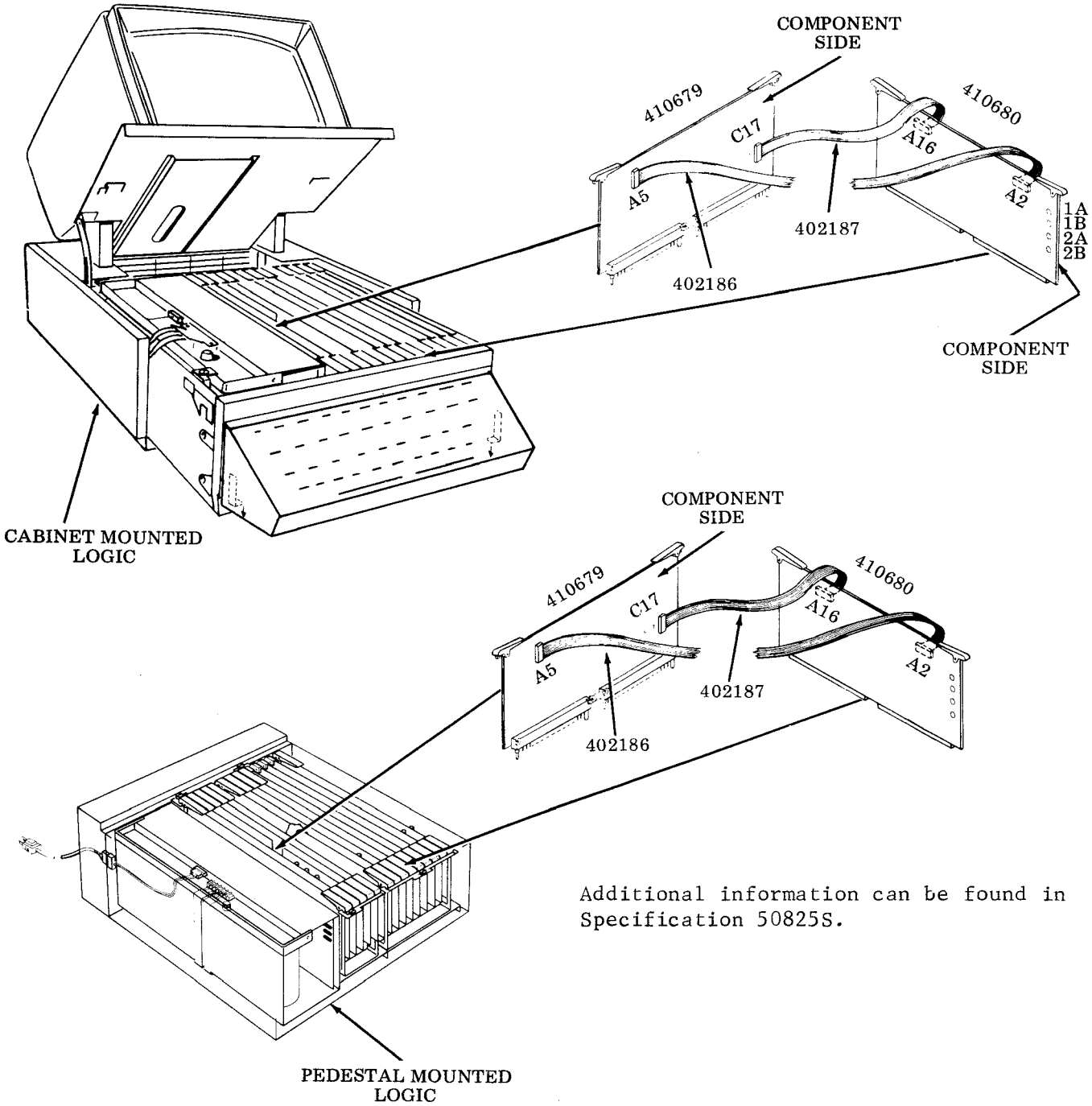

Additional information can be found in Specification 50825S.

14. ATTENDANT SELECTABLE FEATURES

The 403399 modification kit is used when electronic modules having the 403400 modification kit are mounted below in the Model 40 cabinet's pedestal. This simply allows the attendant operator access to the attendant selectable features of the 403400 modification kit without opening the pedestal door each time the options need changing.

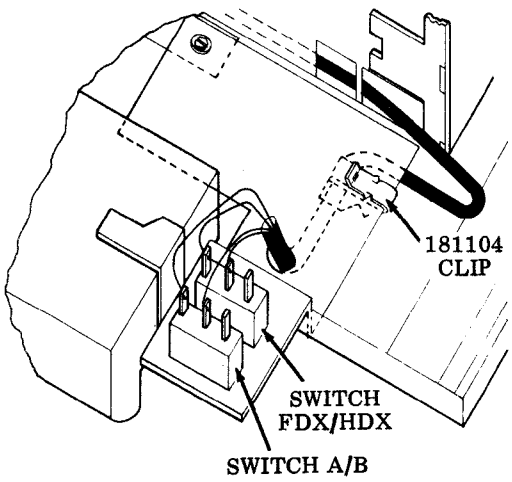

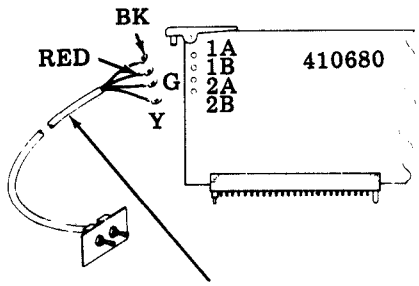

403399 MODIFICATION KIT
(Mounts on Pedestal Door)

Additional information can be found in Specification 50825S.

15. 341910 MODEL 40 COMPONENTS CARRYING CASE

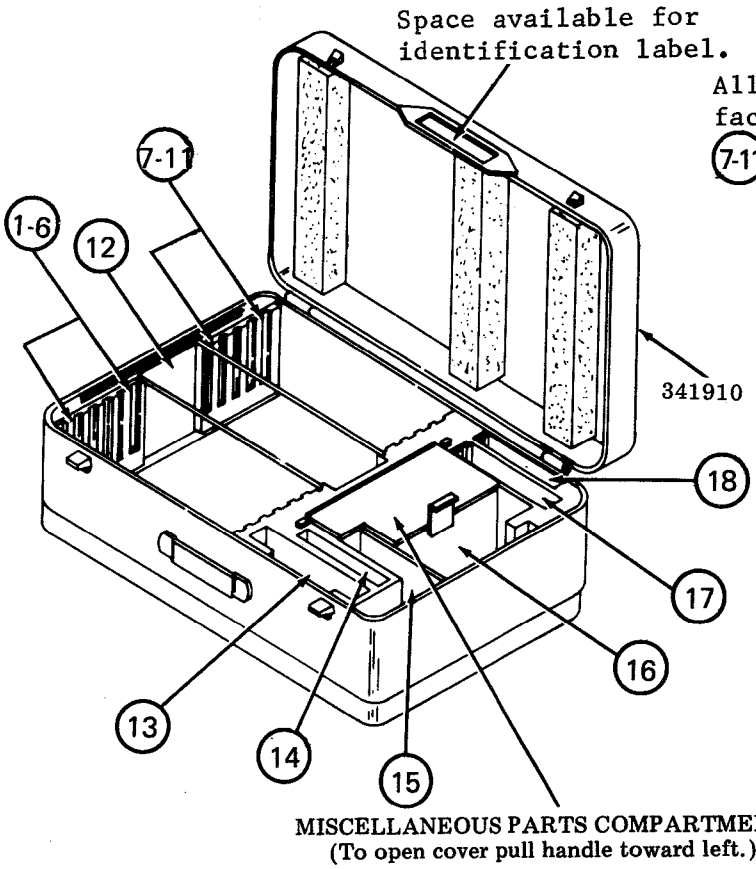

All component side of circuit cards to face front except those in positions 7-11 and 16.

Card Positions

- 1-11 -- Circuit Cards (Similar to 410001)
- 12 -- 40C103 Controller
- 13 -- 410852 Rectifier Card
- 14 -- 410853 Regulator Card
- 15 -- 410656 Video Card
- 16 -- 410854 High Voltage Card
- 17 -- 410672 Circuit Card
- 18 -- 410676 Circuit Card

16. AUDIBLE ALARM AND ANSWER BACK ON 40/3 TERMINALS

The 345625 modification kit provides the 9140 Station Controller with an audible alarm and the ability to initiate the optional answer back during post message recall procedures. It is primarily intended for use in 40/3 applications.

Additional information can be found in Specification 50803S.

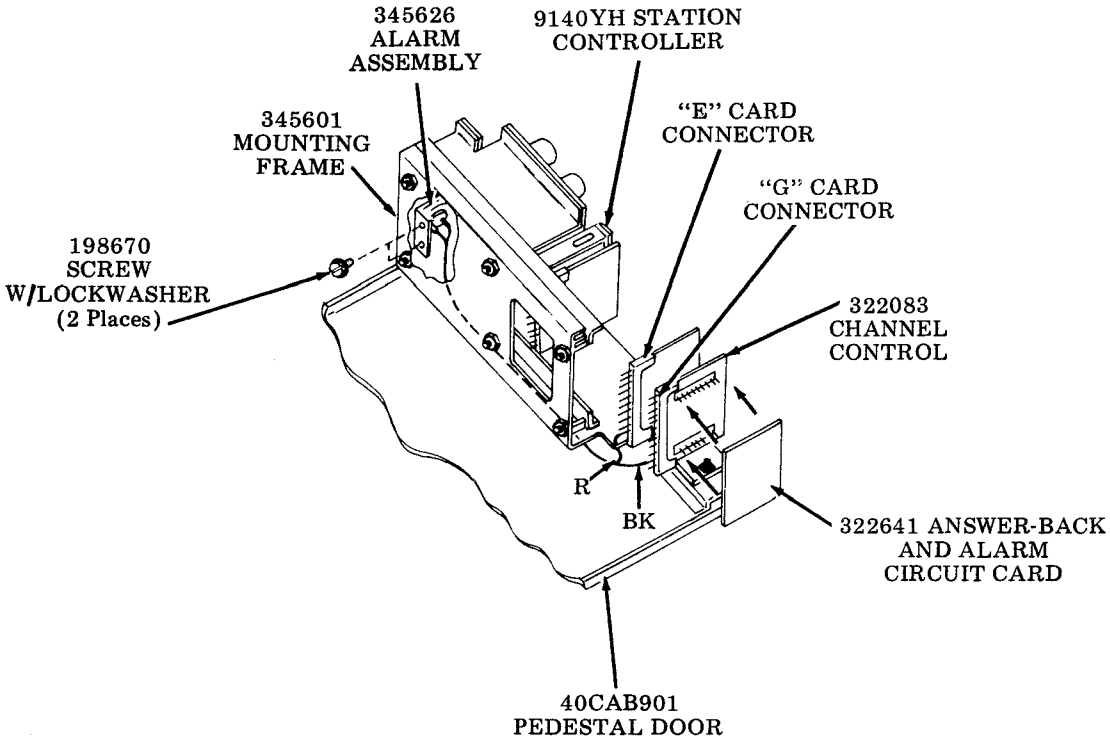

17. 20/60 MA INTERFACE

The 402180 modification kit provides a means to interface both a 20/60 milliampere current loop and a printer to the printer port of a 40C204 Controller (40/2). This modification kit basically eliminates the need for the customer to modify the standard printer cable in order to interface their current loop cable to the 40C204 Controller.

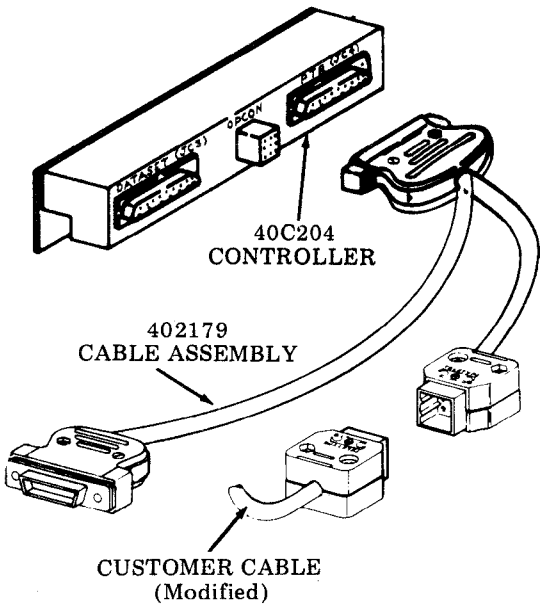

Additional information can be found in Specification 50835S.

18. 115 V OUTPUT -- 100 V INPUT MODIFICATION

The 402231 modification kit supplies an output voltage of 115 V ac ±10 percent at 50/60 Hz with an input voltage of 100 V ac ±10 percent at 50/60 Hz. Full load output current is 5 amperes maximum.

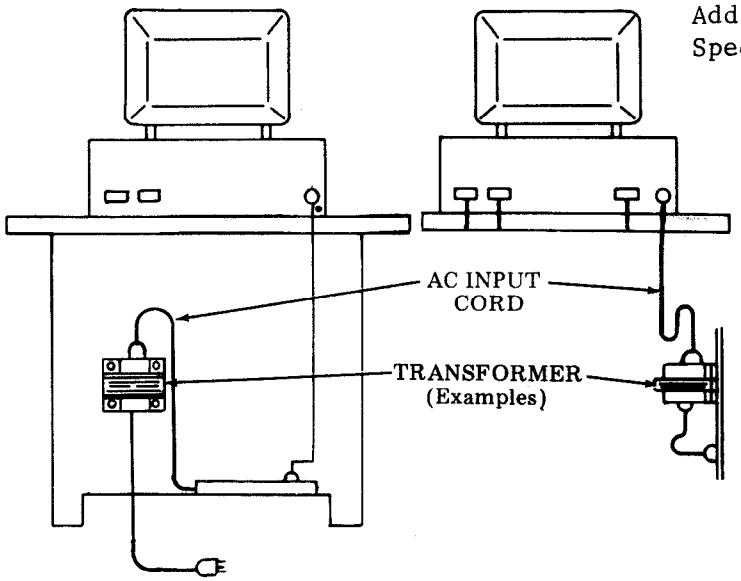

Additional information can be found in Specification 50837S.

19. NEW TYPE TILT MECHANISM

The 402286 modification kit provides the necessary parts for replacing a wheel-type CRT tilt mechanism with a lever-type mechanism.

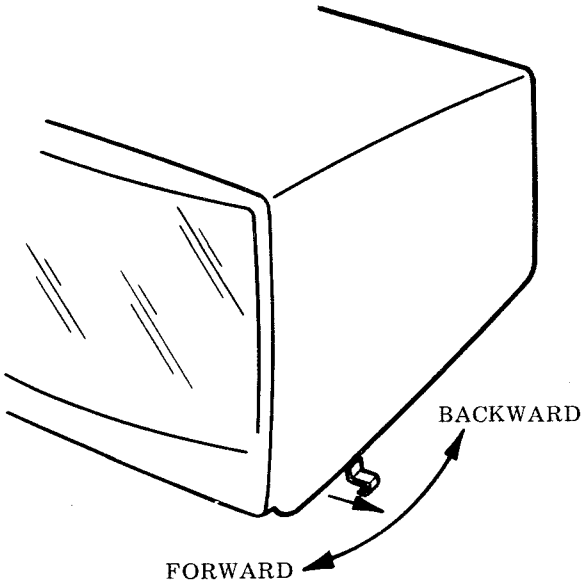

Additional information can be found in Specification 50816S.

20. PREPARATORY SEND MODE AND EVEN PARITY GENERATION DETECTION

402310 modification kit provides 40C204 Controller with preparatory send mode and even parity generation detection in 40/2 applications.

Additional information can be found in Specification 50845S.

21. CONNECTOR ADAPTER FOR CURRENT LOOP INTERFACE

403378 modification kit provides connector adapter when using loop current interface without data set for Model 40/2.

22. DC1, DC3, AND EOT FEATURES TO 410674 CARD

The 407414 modification kit provides DC1, DC3, and EOT to the 410674 circuit card (Issue 4B) found in the 40C204 Controller. See Specification 50843S.

23. FAN ASSEMBLY GUARD

The 408014 modification kit was designed to prevent any objects, such as cables from entering the fan assembly area of New Style (air flow through rear) cabinets. Teletype Corporation codes are 40CAB901/AA, AB, AF, and AG.

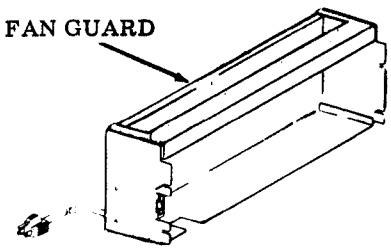

Additional information can be found in Specification 50821S.

24. MOUNTING AND STORAGE FACILITIES FOR CABLES IN CABINET

The 408045 modification kit (replacing 401666 modification kit which is no longer available) provides ac power distribution, terminal block and transformer mounting facilities, and storage facilities for excess cable inside the pedestal of a Model 40 set.

The 408047 modification kit (replacing 401681 cable handling plate which is no longer available) provides cable storage facilities for a Model 40 pedestal.

Additional information can be found in Specification 50802S.

25. 403594 MODIFICATION KIT FOR MONITOR/POWER SUPPLY COMPATIBILITY

a. On sets comprised of monitor and power supply units each serially numbered BELOW 10,000, circuit common and frame ground are tied together by the monitor circuitry.
b. On sets comprised of monitor and power supply units each serially numbered 10,000 and ABOVE, the circuit common to frame ground connection is made in the power supply.

25. 403594 MODIFICATION KIT FOR MONITOR/POWER SUPPLY COMPATIBILITY (Cont)

c. Modification kit 403594 upgrades units serially numbered below 10,000 to units serially numbered 10,000 and above. (Illustration below shows changes in the monitor with the kit.)

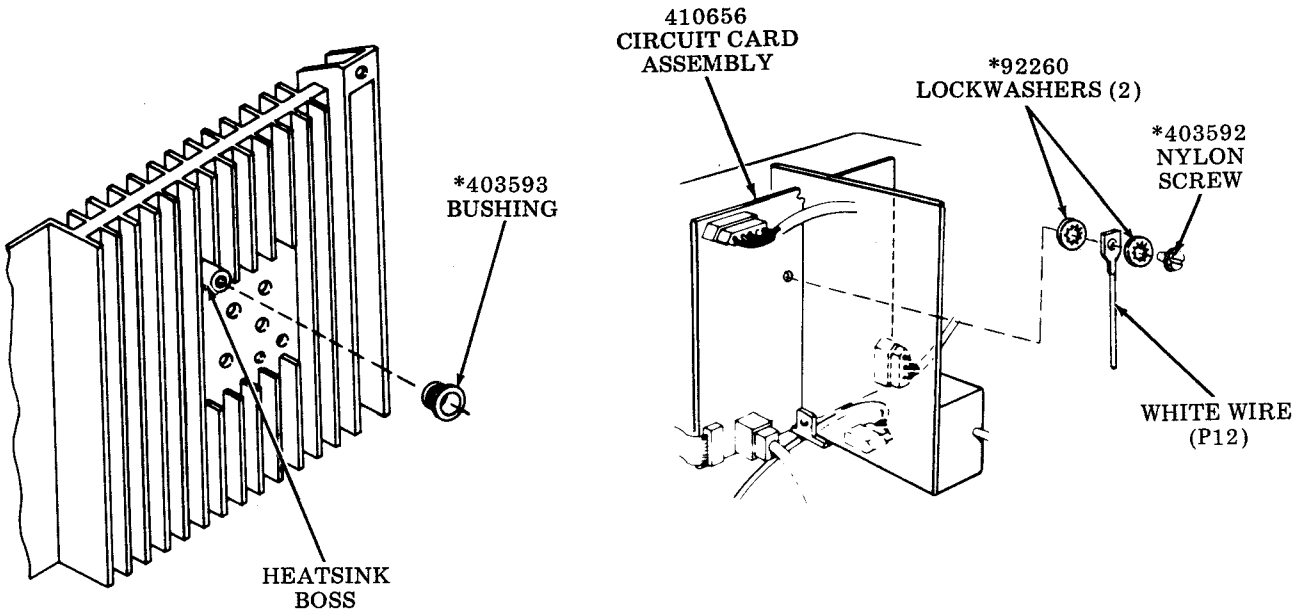

*Parts that comprise the 403594 modification kit.

Compatibility

Display monitor units serially numbered 10,000 and above, or units numbered under 10,000 that have been updated with the 403594 modification kit, MUST be mated only with power supply units serially numbered 10,000 and above, or with units numbered under 10,000 that have been updated to later circuitry.

Conversely, monitor units serially numbered under 10,000 and wired as manufactured, MUST be mated with power supply units serially numbered under 10,000 that are wired as manufactured.

For further information refer to Specification 50810S.

26. TSM 7810S LINE MONITOR DATA DISPLAY TEST SET

A test set which is useful in some trouble isolation procedures is the TSM 7810S Line Monitor Data Display which allows the user to see what is happening at the communication interface.

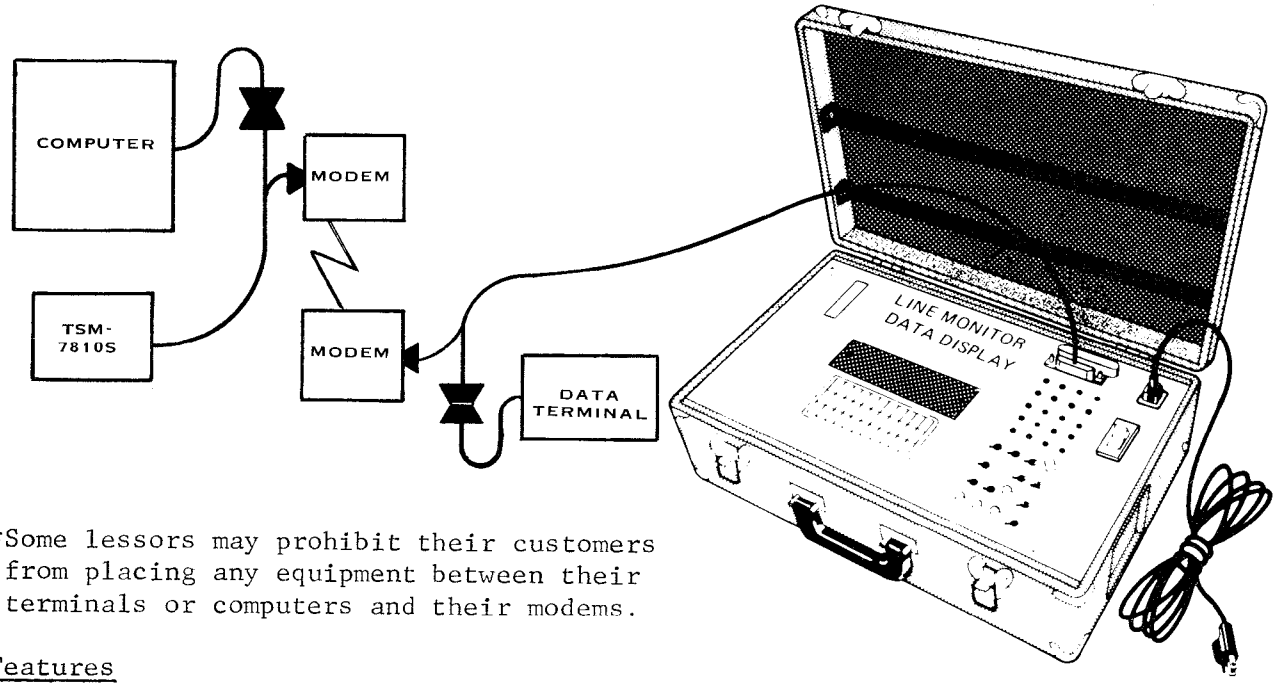

*Some lessors may prohibit their customers from placing any equipment between their terminals or computers and their modems.

Features

- EIA RS-232-C interface
- 1200 bps asynchronous with internal clock
- Up to 9600 bps synchronous or isochronous with timing supplied by modem
- 75, 110, 150, 300, 600, 1050, and 2400 bps asynchronous with auxiliary plug-in clock cards
- Stores 1024 characters
- 16 character data display window for viewing stored data; separate indicators at each character position for parity error and whether the character was sent or received
- Displays 96 ASCII (American National Standard Code for Information Interchange) characters plus symbols for 32 ASCII controls (EBCDIC translation table included)
- Option switch for ASCII or EBCDIC SYN control
- Indicates status of the EIA interface leads
- Fits under airline seat; portable case 19 x 12 x 6-1/2 inch with storage for power cable, connecting cable, and auxiliary clock cards
- 25 pounds
- 115 V, 50/60 Hz, 105 Watts

26. TSM 7810S LINE MONITOR DATA DISPLAY TEST SET (Cont)

Monitor Indicators

These LED indicators monitor the following EIA interface leads and internal functions of the TSM-7810S:

RTS -- Request to Send (CA)
CTS -- Clear to Send (CB)
DTR -- Data Terminal Ready (CD)
DSR -- Data Set Ready (CC)
SD -- Send Data (BA) Mark/state 1 or Space/state 0
RD -- Receive Data (BB) Mark/state 1 or Space/state 0
RI -- Ring Indicator (CE)
SEND MODE -- data display monitoring Send Data lead
CD -- Carrier Detect (CF)
REC MODE -- data display monitoring Receive Data lead
-12 V PS -- status of internal power supply
STD -- Secondary Transmitted Data** (SBA -- leads 11 and 14)
IN SYNC -- displays receiving distributor is in character synchronism
SRD -- Secondary Received Data** (SBB -- leads 12 and 16)
BUFFER 1/4, 1/2, 3/4, FULL -- approximate buffer capacity filled

**Reverse Channel

Monitor and Display Controls

CLOCK EXT/AUX/INT -- provides for external clocking from the modem for synchronous or isochronous operation, clocking from auxiliary plug-in clock cards, or internal clocking for 1200 bps asynchronous operation.
ASYNC/SYNC -- selects asynchronous and isochronous or synchronous operation.
2W/4W -- adapts the unit to 2- or 4-wire transmission facilities.
BUFF CLR -- puts space characters in all 1024 positions of the buffer and resets data display window to the first 16 locations in the buffer.
SEND/REC/BOTH -- causes the data display to monitor the Send Data lead, the Receive Data lead, or whichever is active (half-duplex only).
1 SYN/2 SYN -- determines the number of SYN controls required to obtain character synchronism in synchronous operation and also the number of all marking/state 1 controls to drop synchronism.
AUDIBLE ON/OFF -- sounds an audible alarm whenever there is activity on either the Send or Receive Data leads.
AUTO SCROLL ON/OFF -- allows the data display window to scroll through the buffer and follow the data stream or to display only the first 16 characters while the buffer continues to fill.

FAST/SLOW -- allows the data display window to scroll through the buffer rapidly for fast access or slow enough for analysis, when FWD and REV buttons are used.
SYNC ABORT -- drops character synchronism of the TSM-7810S.
WRAP AROUND ON/OFF -- ON allows data received after the buffer is full to replace data already in the buffer.
FWD REV -- scrolls the data display window forward or backward through the buffer.
HOME -- resets the data display to the first 16 locations in the buffer.
DISPLAY INT/EXT -- allows data to enter the display buffer in the INT position or to be directed to the EXT DISPLAY connector in the EXT position.

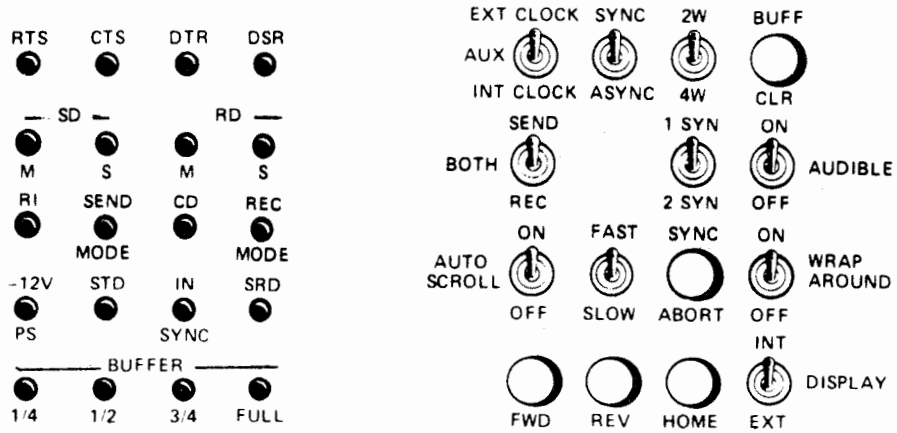

The TSM-7810S may be purchased from Teletype Corporation. Teletype Service offers both a Testing Service and a Loan Service. The Loan Service provides use of the TSM-7810S; the Testing Service provides a product service representative equipped with the unit.

402325 MODIFICATION KIT PROVIDES ALTERATION OF LINE DISCONNECT, REVERSE CHANNEL, AND MOTOR CONTROL FEATURES IN 40/2 APPLICATIONS

Specification 50849S for details.

402320 MODIFICATION KIT ALLOWS OPERATION OF ISOCRONOUS TERMINALS WITH SYNCHRONOUS DATA SETS IN 40/2 APPLICATIONS

Specification 50848S for details.

402178 MODIFICATION KIT ALLOWS INTERFACE OF 40/2 TERMINALS TO 113A OR 113D TYPE DATA SETS

pecification 50822S for details.

402315 MODIFICATION KIT CHANGES CIRCUIT CARD 410001 INTO 410018, AND
402316 MODIFICATION KIT CHANGES CIRCUIT CARD 410009 INTO 410018 FOR
ESTRUCTIVE SCROLLING OPERATION IN 40/1, 40/2, AND 40/3 APPLICATIONS

ecification 50851S for details.